CERTIFICATE OF AUTHENTICITY

THIS IS TO CERTIFY THAT THE FOLLOWING ELECTRONIC RECORDS ARE TRUE AND ACCURATE REPRODUCTIONS OF THE ORIGINAL RECORDS OF JAMES CITY COUNTY GENERAL SERVICES DEPARTMENT- STORMWATER DIVISION; WERE SCANNED IN THE REGULAR COURSE OF BUSINESS PURSUANT TO GUIDELINES ESTABLISHED BY THE LIBRARY OF VIRGINIA AND ARCHIVES; AND HAVE BEEN VERIFIED IN THE CUSTODY OF THE INDIVIDUAL LISTED BELOW.

BMP NUMBER: **99132**

DATE VERIFIED: **February 13, 2013**

QUALITY ASSURANCE TECHNICIAN: **Leah Hardenbergh**

Leah Hardenbergh

LOCATION: WILLIAMSBURG, VIRGINIA

Stormwater Division

MEMORANDUM

DATE: March 12, 2010

TO: Michael J. Gillis, Virginia Correctional Enterprises Document Management Services

FROM: Jo Anna Ripley, Stormwater

PO: 270712

RE: Files Approved for Scanning

General File ID or BMP ID: 99132

PIN: 1240100015

Subdivision, Tract, Business or Owner Name (if known): Owens Brockway Glass Container Inc

Property Description: General File

Site Address: 150 Industrial Blvd

(For internal use only) **Box** 20 **Drawer:** 8

Agreements: (in file as of scan date) **Y** **Book or Doc#:** 485 **Page:** 577-579

487 391-396

Comments

Attachment A

DESCRIPTION
REMAINING LAND OF OWENS-ILLINOIS
GLASS CONTAINER, INC.

BEGINNING AT A POINT ON THE SOUTHERLY RIGHT OF WAY LINE OF INDUSTRIAL BOULEVARD S73°14'15"E, 1279.06' FROM THE EASTERLY RIGHT OF WAY LINE OF ROUTE 60. RUNNING THENCE S73°14'50"E, 1470.94' TO A POINT; THENCE S16°45'10"W, 1953.90' TO A POINT ON THE NORTHERLY LINE OF THE C&O RAILROAD RIGHT OF WAY; THENCE THE FOLLOWING COURSES ALONG THE NORTHERLY LINE OF THE C&O RAILROAD RIGHT OF WAY: ALONG THE ARC OF A CURVE TO THE RIGHT HAVING A RADIUS OF 2821.33', 28.25' - N57°53'31"W, 99.64' - N75°32'09"W, 99.64' - ALONG THE ARC OF A CURVE TO THE RIGHT HAVING A RADIUS OF 2821.33', 259.20' - N59°27'00"W, 326.80' - N32°53'06"W, 55.09' - N59°27'00"W, 423.53' TO A CONCRETE MONUMENT - N59°27'00"W, 44.93'; THENCE S67°43'13"E, 40.99' TO A POINT; THENCE N05°59'48"W, 388.59' TO A CONCRETE MONUMENT; THENCE N46°44'41"W, 74.64' TO A POINT; THENCE N16°40'35"E, 1265.48' TO THE POINT AND PLACE OF BEGINNING. CONTAINING 2,596,654 S.F., 59.61 AC.

VIRGINIA: City of Williamsburg and County of
James City, to [illegible]
In the Clerk's office [illegible] Court of the
City of Williamsburg [illegible] City the
31 [illegible] Aug 20 This Covenants
was pres[illegible] to annexed and
admitted to record [illegible] 3:12 [illegible] lock
Teste: Helene S. Ward, Clerk
by [signature]
Deputy Clerk

THE DeYOUNG-JOHNSON GROUP, INC. ENGINEERS/ARCHITECTS/SURVEYORS
PO BOX 3505 WILLIAMSBURG, VIRGINIA 23187 (804) 253-0573 FAX (804) 253-2319
DANIEL J. DeYOUNG, P.E. WILLIAM D. JOHNSON, JR. P.E. [illegible]

INSPECTION/MAINTENANCE OF RUNOFF CONTROL FACILITY

THIS DECLARATION, made this 14TH day of AUGUST, 1990, between VISTA DEVELOPMENT, INC, and all successors in interest, hereinafter referred to as the "COVENANTOR(S)," owner(s) of the following property: TAX MAP 12-4 PARCEL 1-15 AND AS FURTHER DESCRIBED IN ATTACHMENT "A"; 150 INDUSTRIAL BLVD.,

and James City County, Virginia, hereinafter referred to as the "COUNTY."

WITNESSETH:

We, the COVENANTOR(S), with full authority to execute deeds, mortgages, other covenants, and all rights, titles and interests in the property described above, do hereby covenant with the COUNTY as follows:

1. The COVENANTOR(S) shall provide maintenance for the runoff control facility, hereinafter referred to as the "FACILITY," located on and serving the above-described property to ensure that the FACILITY is and remains in proper working condition in accordance with approved design standards, and with the law and applicable executive regulations.

2. If necessary, the COVENANTOR(S) shall levy regular or special assessments against all present or subsequent owners of property served by the FACILITY to ensure that the FACILITY is properly maintained.

3. The COVENANTOR(S) shall provide and maintain perpetual access from public rights-of-way to the FACILITY for the COUNTY, its agent and its contractor.

4. The COVENANTOR(S) shall grant the COUNTY, its agent and its contractor a right of entry to the FACILITY for the purpose of inspecting, operating, installing, constructing, reconstructing, maintaining or repairing the FACILITY.

5. If, after reasonable notice by the COUNTY, the COVENANTOR(S) shall fail to maintain the FACILITY in accordance with the approved design standards and with the law and applicable executive regulations, the COUNTY may perform all necessary repair or maintenance work, and the COUNTY may assess the COVENANTOR(S) and/or all owners of property served by the FACILITY for the cost of the work and any applicable penalties.

6. The COVENANTOR(S) shall indemnify and save the COUNTY harmless from any and all claims for damages to persons or property arising from the installation, construction, maintenance, repair, operation or use of the FACILITY.

7. The COVENANTOR(s) shall promptly notify the COUNTY when the COVENANTOR(S) legally transfers any of the COVENANTOR(S)' responsibilities for the FACILITY. The COVENANTOR(S)' shall supply the COUNTY with a copy of any document of transfer, executed by both parties.

8. The covenants contained herein shall run with the land and shall bind the COVENANTOR(S) and the COVENANTOR(S)' heirs, executors, administrators, successors and assignees, and shall bind all present and subsequent owners of property served by the FACILITY.

9. This COVENANT shall be recorded in the County Land Records.

IN WITNESS WHEREOF, the COVENANTOR(S) have executed this DECLARATION OF COVENANTS as of this 14TH day of AUGUST, 1990.

COVENANTOR(S)

_____

ATTEST:

_____

COVENANTOR(S)

Thomas M. Schneider

ATTEST:

Louis M. Pauch

STATE OF VIRGINIA
~~COUNTY~~ City OF Williamsburg

I hereby certify that on this 14th day of August 1990, before the subscribed, a Notary Public of the State of Virginia, and for the ~~County~~ City of Williamsburg, aforesaid personally appeared Thomas M. Schneider and did acknowledge the aforegoing instrument to be their Act.

IN WITNESS WHEREOF, I have hereunto set my hand and official seal this 14th day of August, 1990.

Patricia L. Gaskins
Notary Public

My Commission expires: 11.1.91

Approved as to form:

Attachment A

DESCRIPTION

PARCEL TO BE CONVEYED
TO VISTA DEVELOPMENT INC.

BEGINNING AT A POINT, MARKED BY AN IRON PIPE, SAID POINT BEING ON THE SOUTHERLY RIGHT OF WAY LINE OF INDUSTRIAL BOULEVARD S73°14'50"E, 950' FROM THE EASTERLY RIGHT OF WAY LINE OF ROUTE 60. RUNNING THENCE ALONG THE SOUTHERLY RIGHT OF WAY LINE OF INDUSTRIAL BOULEVARD S73°14'50"E. 329.06' TO A POINT; THENCE S16°40'35"W, 1265.48' TO A POINT; THENCE N46°44'41"W 481.33' TO AN IRON PIPE; THENCE N16°45'10"E, 850.69' TO AN IRON PIPE; THENCE S73°14'50"E, 100.00' TO AN IRON PIPE; THENCE N16°45'10"E, 200.00' TO THE POINT AND PLACE OF BEGINNING. CONTAINING 477,774 S.F., 10.97 ACRES.

VIRGINIA: City of Williamsburg and County of James City, to Wit:
In the Clerk [illegible] the Circuit Court of the City of Williamsburg and County of [illegible] the 31 day of Aug [illegible] 80 [illegible] Covenants was presented with certificate [illegible] and admitted to record at 3:17 o'clock
Teste: Helene S. Ward, Clerk
by Helene S. Ward
Deputy Clerk

THE DEYOUNG-JOHNSON GROUP INC ENGINEERS ARCHITECTS SURVEYORS
PO BOX 3505 WILLIAMSBURG VIRGINIA 23187 (804) 253-0673 FAX (804) 253-2819
DANIEL J. DEYOUNG, P.E. [illegible]

6097

INSPECTION/MAINTENANCE OF RUNOFF CONTROL FACILITY

THIS DECLARATION, made this 27TH day of AUGUST, 1990, between OWENS-BROCKWAY GLASS CONTAINER, INC and all successors in interest, hereinafter referred to as the "COVENANTOR(S)," owner(s) of the following property: TAX MAP 12-4 PARCEL 1-15 AND AS FURTHER DESCRIBED IN ATTACHMENT "A", and James City County, Virginia, hereinafter referred to as the "COUNTY."

WITNESSETH:

We, the COVENANTOR(S), with full authority to execute deeds, mortgages, other covenants, and all rights, titles and interests in the property described above, do hereby covenant with the COUNTY as follows:

1. The COVENANTOR(S) shall provide maintenance for the runoff control facility, hereinafter referred to as the "FACILITY," located on and serving the above-described property to ensure that the FACILITY is and remains in proper working condition in accordance with approved design standards, and with the law and applicable executive regulations.

2. If necessary, the COVENANTOR(S) shall levy regular or special assessments against all present or subsequent owners of property served by the FACILITY to ensure that the FACILITY is properly maintained.

3. The COVENANTOR(S) shall provide and maintain perpetual access from public rights-of-way to the FACILITY for the COUNTY, its agent and its contractor.

4. The COVENANTOR(S) shall grant the COUNTY, its agent and its contractor a right of entry to the FACILITY for the purpose of inspecting, operating, installing, constructing, reconstructing, maintaining or repairing the FACILITY.

5. If, after reasonable notice by the COUNTY, the COVENANTOR(S) shall fail to maintain the FACILITY in accordance with the approved design standards and with the law and applicable executive regulations, the COUNTY may perform all necessary repair or maintenance work, and the COUNTY may assess the COVENANTOR(S) and/or all owners of property served by the FACILITY for the cost of the work and any applicable penalties.

6. The COVENANTOR(S) shall indemnify and save the COUNTY harmless from any and all claims for damages to persons or property arising from the installation, construction, maintenance, repair, operation or use of the FACILITY.

7. The COVENANTOR(s) shall promptly notify the COUNTY when the COVENANTOR(S) legally transfers any of the COVENANTOR(S)' responsibilities for the FACILITY. The COVENANTOR(S)' shall supply the COUNTY with a copy of any document of transfer, executed by both parties.

8. The covenants contained herein shall run with the land and shall bind the COVENANTOR(S) and the COVENANTOR(S)' heirs, executors, administrators, successors and assignees, and shall bind all present and subsequent owners of property served by the FACILITY.

9. This COVENANT shall be recorded in the County Land Records.

IN WITNESS WHEREOF, the COVENANTOR(S) have executed this DECLARATION OF COVENANTS as of this 27TH day of AUGUST, 19 90.

COVENANTOR(S)

G J Lemieux

GERALD J. LEMIEUX -

ATTEST:

_____

COVENANTOR(S)

_____

ATTEST:

_____

STATE OF VIRGINIA
COUNTY OF James City

I hereby certify that on this 28 day of August 19 90, before the subscribed, a Notary Public of the State of Virginia, and for the County of James City, aforesaid personally appeared G J Lemieux and did acknowledge the aforegoing instrument to be their Act.

IN WITNESS WHEREOF, I have hereunto set my hand and official seal this 28 day of August, 19 90.

Phyllis J. Cody
Notary Public

My Commission expires: 6-10-91

Approved as to form:

8481

DECLARATION OF COVENANT BOOK 485 PAGE 577

INSPECTION/MAINTENANCE OF RUNOFF CONTROL FACILITY

THIS DECLARATION, made this 12 day of JUNE, 1990, between OWENS-ILLINOIS INC, and all successors in interest, hereinafter referred to as the "COVENANTOR(S)," owner(s) of the following property: OWENS-ILLINOIS INC
150 INDUSTRIAL BLVD.
TOANO, VA 23168 TAX PARCEL (12-4)(1-15)
(FURTHER DESCRIBED IN ATTACHMENT A)
and James City County, Virginia, hereinafter referred to as the "COUNTY."

WITNESSETH:

We, the COVENANTOR(S), with full authority to execute deeds, mortgages, other covenants, and all rights, titles and interests in the property described above, do hereby covenant with the COUNTY as follows:

1. The COVENANTOR(S) shall provide maintenance for the runoff control facility, hereinafter referred to as the "FACILITY," located on and serving the above-described property to ensure that the FACILITY is and remains in proper working condition in accordance with approved design standards, and with the law and applicable executive regulations.

2. If necessary, the COVENANTOR(S) shall levy regular or special assessments against all present or subsequent owners of property served by the FACILITY to ensure that the FACILITY is properly maintained.

3. The COVENANTOR(S) shall provide and maintain perpetual access from public rights-of-way to the FACILITY for the COUNTY, its agent and its contractor.

4. The COVENANTOR(S) shall grant the COUNTY, its agent and its contractor a right of entry to the FACILITY for the purpose of inspecting, operating, installing, constructing, reconstructing, maintaining or repairing the FACILITY.

5. If, after reasonable notice by the COUNTY, the COVENANTOR(S) shall fail to maintain the FACILITY in accordance with the approved design standards and with the law and applicable executive regulations, the COUNTY may perform all necessary repair or maintenance work, and the COUNTY may assess the COVENANTOR(S) and/or all owners of property served by the FACILITY for the cost of the work and any applicable penalties.

6. The COVENANTOR(S) shall indemnify and save the COUNTY harmless from any and all claims for damages to persons or property arising from the installation, construction, maintenance, repair, operation or use of the FACILITY.

7. The COVENANTOR(s) shall promptly notify the COUNTY when the COVENANTOR(S) legally transfers any of the COVENANTOR(S)' responsibilities for the FACILITY. The COVENANTOR(S)' shall supply the COUNTY with a copy of any document of transfer, executed by both parties.

8. The covenants contained herein shall run with the land and shall bind the COVENANTOR(S) and the COVENANTOR(S)' heirs, executors, administrators, successors and assignees, and shall bind all present and subsequent owners of property served by the FACILITY.

9. This COVENANT shall be recorded in the County Land Records.

IN WITNESS WHEREOF, the COVENANTOR(S) have executed this DECLARATION OF COVENANTS as of this 12 day of June, 1990.

COVENANTOR(S)
Owens-Illinois Inc.
Robert E. Lachmiller

ATTEST:

_____

COVENANTOR(S)

_____

ATTEST:

_____

STATE OF VIRGINIA
COUNTY OF James City

I hereby certify that on this 12 day of June 1990, before the subscribed, a Notary Public of the State of Virginia, and for the County of James City, aforesaid personally appeared Robert E. Lachmiller / Owens Illinois Inc. and did acknowledge the aforegoing instrument to be their Act.

IN WITNESS WHEREOF, I have hereunto set my hand and official seal this 12 day of June, 1990.

Phyllis J. Cody
Notary Public

My Commission expires: June 10, 1991

Approved as to form:

Leo P. Rogers

0261U

Rev. 8-89

ATTACHMENT A

DESCRIPTION
REMAINING LAND OF OWENS-ILLINOIS
GLASS CONTAINER, INC.

BEGINNING AT A POINT ON THE SOUTHERLY RIGHT OF WAY LINE OF INDUSTRIAL BOULEVARD S73°14'15"E, 1279.06' FROM THE EASTERLY RIGHT OF WAY LINE OF ROUTE 60. RUNNING THENCE S73°14'50"E, 1470.94' TO A POINT; THENCE S16°45'10"W, 1953.90' TO A POINT ON THE NORTHERLY LINE OF THE C&O RAILROAD RIGHT OF WAY; THENCE THE FOLLOWING COURSES ALONG THE NORTHERLY LINE OF THE C&O RAILROAD RIGHT OF WAY: ALONG THE ARC OF A CURVE TO THE RIGHT HAVING A RADIUS OF 2821.33', 28.25' - N57°53'31"W, 99.64' - N75°32'09"W, 99.64' - ALONG THE ARC OF A CURVE TO THE RIGHT HAVING A RADIUS OF 2821.33', 259.20' - N59°27'00"W, 326.80' - N32°53'06"W, 55.09' - N59°27'00"W, 423.53' TO A CONCRETE MONUMENT - N59°27'00"W, 44.93'; THENCE S67°43'13"E, 40.99' TO A POINT; THENCE N05°59'48"W, 388.59' TO A CONCRETE MONUMENT; THENCE N46°44'41"W, 74.64' TO A POINT; THENCE N16°40'35"E, 1265.48' TO THE POINT AND PLACE OF BEGINNING. CONTAINING 2,596,654 S.F., 59.61 AC.

VIRGINIA: City of Williamsburg and County of James City, to Wit:
In the C[illegible] office of the Circuit Court of the City of W[illegible]burg and County of James City the 26 [illegible] Aug 19[illegible] **This** Covenants **was [illegible]ted with certificate annexed and admitted [illegible] at** 9:15 **o'clock**
Teste: Helen[illegible] Ward, Clerk
by [signature]
Deputy Clerk

THE DEYOUNG-JOHNSON GROUP, INC. ENGINEERS-ARCHITECTS-SURVEYORS
P.O. BOX 3505 WILLIAMSBURG, VIRGINIA 23187 (804) 253-0673 FAX (804) 253-2319
DANIEL J. DEYOUNG, P.E. WILLIAM D. JOHNSON, JR. P.E. WILLIAM G. BLACK, A.I.A. [illegible] PLANNER [illegible] PENGINEER

COMMONWEALTH OF VIRGINIA

OFFICIAL RECEIPT
WILLIAMSBURG/JAMES CITY COUNTY CIRCUIT
DEED RECEIPT

DATE: 08/20/90 TIME: 09:17:57 ACCOUNT: 095CLR900008481 RECEIPT: 90000015454
CASHIER: CHB REG: WB04 TYPE: COVENTS PAYMENT: FULL PAYMENT
INSTRUMENT : 900008481 BOOK: 0 PAGE: 0 RECORDED: 08/20/90 AT 09:15
GRANTOR NAME : OWNES-ILLINOIS INC EX: N LOCALITY: CO
GRANTEE NAME : JAMES CITY COUNTY EX: N PERCENT: 1.00
AND ADDRESS :
RECEIVED OF : JAMES CITY CO
CHECK : $13.00
DESCRIPTION 1: COVENANTS OWENS-ILLINOIS GLASS CONTAINER
2:
CONSIDERATION: .00 ASSUMPTION: .00 MAP:

CODE	DESCRIPTION	PAID	CODE	DESCRIPTION	PAID
301	DEEDS	12.00	145	VSLF	1.00

TOTAL TENDERED : 13.00
TOTAL AMOUNT PAID: 13.00
TOTAL CHANGE AMT : .00

CLERK OF COURT: HELENE S. WARD

DC - 19 5/86

DESCRIPTION

PARCEL TO BE CONVEYED
TO VISTA DEVELOPMENT INC.

BEGINNING AT A POINT, MARKED BY AN IRON PIPE, SAID POINT BEING ON THE SOUTHERLY RIGHT OF WAY LINE OF INDUSTRIAL BOULEVARD S73°14′50"E, 950′ FROM THE EASTERLY RIGHT OF WAY LINE OF ROUTE 60. RUNNING THENCE ALONG THE SOUTHERLY RIGHT OF WAY LINE OF INDUSTRIAL BOULEVARD S73°14′50"E. 329.06′ TO A POINT; THENCE S16°40′35"W, 1265.48′ TO A POINT; THENCE N46°44′41"W 481.33′ TO AN IRON PIPE; THENCE N16°45′10"E, 850.69′ TO AN IRON PIPE; THENCE S73°14′50"E, 100.00′ TO AN IRON PIPE; THENCE N16°45′10"E, 200.00′ TO THE POINT AND PLACE OF BEGINNING. CONTAINING 477,774 S.F., 10.97 ACRES.

THE DeYOUNG-JOHNSON GROUP INC. ENGINEERS-ARCHITECTS-SURVEYORS
P.O. BOX 3505 WILLIAMSBURG VIRGINIA 23187 (804) 253-0673 FAX (804) 253-1319
DANIEL J. DeYOUNG, P.E. WILLIAM D. JOHNSON, P.E. WILLIAM D. BLACK, P.E. DAVID B. BLANKENSHIP, L.S. JOHN M. PENCE, L.S.

DESCRIPTION
REMAINING LAND OF OWENS-ILLINOIS
GLASS CONTAINER, INC.

BEGINNING AT A POINT ON THE SOUTHERLY RIGHT OF WAY LINE OF INDUSTRIAL BOULEVARD S73°14'15"E, 1279.06' FROM THE EASTERLY RIGHT OF WAY LINE OF ROUTE 60. RUNNING THENCE S73°14'50"E, 1470.94' TO A POINT; THENCE S16°45'10"W, 1953.90' TO A POINT ON THE NORTHERLY LINE OF THE C&O RAILROAD RIGHT OF WAY; THENCE THE FOLLOWING COURSES ALONG THE NORTHERLY LINE OF THE C&O RAILROAD RIGHT OF WAY: ALONG THE ARC OF A CURVE TO THE RIGHT HAVING A RADIUS OF 2821.33', 28.25' - N57°53'31"W, 99.64' - N75°32'09"W, 99.64' - ALONG THE ARC OF A CURVE TO THE RIGHT HAVING A RADIUS OF 2821.33', 259.20' - N59°27'00"W, 326.80' - N32°53'06"W, 55.09' - N59°27'00"W, 423.53' TO A CONCRETE MONUMENT - N59°27'00"W, 44.93'; THENCE S67°43'13"E, 40.99' TO A POINT; THENCE N05°59'48"W, 388.59' TO A CONCRETE MONUMENT; THENCE N46°44'41"W, 74.64' TO A POINT; THENCE N16°40'35"E, 1265.48' TO THE POINT AND PLACE OF BEGINNING. CONTAINING 2,596,654 S.F., 59.61 AC.

THE DEYOUNG-JOHNSON GROUP, INC. ENGINEERS·ARCHITECTS·SURVEYORS
P.O. BOX [illegible] WILLIAMSBURG, VIRGINIA 23187 (804) 253-[illegible] FAX (804) 253-2379
DANIEL DEYOUNG PE, WILLIAM D. JOHNSON JR. PE, WILLIAM C. BEACH AIA, LYNN D. EVANS [illegible]

RUN-OFF ANALYSIS

FOR

OWENS-ILLINOIS GLASS CONTAINER, INC.
TOANO, JAMES CITY COUNTY, VIRGINIA

MAY 29, 1990
COMMISSION NO. 1900371

COMMONWEALTH OF VIRGINIA
DANIEL J. DE YOUNG
No.
3517
CERTIFIED PROFESSIONAL ENGINEER

THE DEYOUNG-JOHNSON GROUP, INC.

RUN-OFF ANALYSIS

FOR

OWENS-ILLINOIS GLASS CONTAINER, INC.
TOANO, JAMES CITY COUNTY, VIRGINIA

MAY 29, 1990
COMMISSION NO. 1900371

Louis M. Penci, CLS
Project Hydrologist

Daniel J. DeYoung, P.E.
Principal Engineer

TABLE OF CONTENTS

		PAGE
I.	INTRODUCTION	1
	Scope of Report	1
	Summary of Findings	1
II.	DESCRIPTION OF PROJECT	2
	Location and Land Use	2
	Topography and Soils	3
	Proposed Site Improvements	3
III.	CHARACTERISTICS OF RUNOFF	5
	Rainfall Criteria	5
	Stormwater Runoff	5
	Nonpoint Pollution	6
IIII.	POLLUTION MITIGATION AND PERFORMANCE CRITERIA	8
	Introduction	8
	Control Practices	9
	Summary	11

APPENDIX A: Design data and criteria details for the infiltration trenches.

APPENDIX B: Computer output SCS modified rational method.

APPENDIX C: James City County Design Manual design guidelines for infiltration trenches and grassed filter strips.

APPENDIX D: James City County Design Manual loading rate tabulations for sediment and phosphorus.

I. INTRODUCTION

Scope of Report:

This run-off analysis report for Owens-Illinois Glass Container, Inc., James City County, has been prepared in accordance with the requirements and guidelines as set forth in Article X. Overlay Districts, James City County Zoning Ordinance and Design Manual for Run-Off Analysis Reservoir Protection Overlay District. The study addresses a descriptive critique of the proposed site improvements, characteristics of pre-development natural run-off and projected post-development runoff, characteristics of pollutant loadings, measures to reduce the loadings both during and after construction, proposed run-off control and reservoir protective measures, and performance criteria of the control practices. This study report is supplemented by the site improvement plans which depict the location and extent of individual site changes and includes construction details pertaining to the Best Management Practices (BMP) chosen to mitigate effects of the proposed site alterations.

Summary of Findings:

Based upon application of BMP practices and specific control measures as presented in this study, it is anticipated that a **net gain in quality of stormwater runoff** from the Owens Illinois complex can be expected. This is accomplished by providing BMP applications to accommodate impervious area runoff from newly created site improvements and also a portion of the existing complex facility. **There will be no additional sediment or phosphorus pollutant loading from the complex as a direct result of the proposed site improvements.**

II. DESCRIPTION OF PROJECT

Location and Land Use:

Owens-Illinois Glass Container, Inc. is sited on a 70.7 acre parcel of land situate on the south side of S.R. 754 Industrial Boulevard approximately 950 feet east of S.R. 60 in the Toano section of James City County. The property is identified as parcel number (1-15) on tax map sheet (12-4) and is zoned M-2 and RP. Since the plant complex is contained in the Reservoir Protection Overlay District (RP) any proposed development creating 5000 S.F. or more of impervious surfaces requires issuance of a Special Use Permit and approval of a runoff analysis in accordance with Article X, Section 20-533 of the James City County Ordinance.

The Owens-Illinois complex comprises existing manufacturing, glass recycling, and warehouse facilities including ancillary onsite parking areas, various service drives, and a rail service spur connection. Owen-Illinois is currently proposing to create, by subdivision, an 11 acre parcel along the westerly side of the 70.7 acre complex. This 11 acre parcel will be owned and developed by Vista Development Inc., a subsidiary of Rudolph Libbe Inc., as a new warehouse facility. This facility will be operated by Owens-Illinois to expand their present warehouse needs. The required Special Use Permit, Runoff Analysis and Site Plan for the 11 acre site improvements will be made by Vista Development Inc., as a separate submission from the improvements requesting approval under this application. The land use statistics of the remaining 59.7 acre Owens-Illinois complex will be as follows:

Land Use	Percentage of Total Area (59.7 Acres)
Building Coverage	13%
Parking & Service Drives, etc	14%
Grassed Open Space	29%
Wooded Open Space	44%

99132_OWENS_ILLINOIS_SITE_IMPROVEMENTS - 019

Topography and Soils:

The general land form in the area varies, ranging from flat to gentle slopes (0-3%) to steeper slopes (above 8%) found along the natural drainage ravines with a few instances of steep slopes occurring onsite in conjunction with construction of the original plant complex and rail spur. The site slopes in a general easterly direction with drainage accommodated by overland flow, underground storm sewers and man-made ditches and channels directed to natural ravines of France Swamp, a tributary of the proposed Ware Creek reservoir.

The soils on the site in the immediate area of the plant complex are classified as Kempsville-Emporia Fine Sandy Loam and Suffolk Fine Sandy Loam as depicted on Map Sheet 5 of the Soil Survey of James City and York Counties and the City of Williamsburg prepared by the United States Department of Agriculture, Soil Conservation Service. These soils consist of deep, gently sloping, well drained soils with moderate permeability. The erosion hazard in these series is moderate.

Proposed Site Improvements:

Owens-Illinois proposes three (3) areas of site improvements which are necessary for access connection and trailer storage accommodation to facilitate utilization of the Vista Development Inc. new warehouse facility. The improvements consist of creating new impervious paved areas and removal of existing impervious surfaces replacing with pervious area. The following is a summary of each proposed improvement area listing the extent of new site work, demolition of existing site items, and net overall change in amount of impervious surface area.

A. **North Access Driveway Widening** - This work consists of widening approximately 560 L.F. of existing 12' wide asphalt driveway to a 20' driveway width located adjacent to the north side of the warehouse

building. This driveway will connect the existing trailer parking area on the east side of the building to the proposed Vista Development Inc. warehouse loading area.

- New paved drive widening = 4,480 S.F.

Net Change = 4,480 S.F. Additional Impervious Area

B. **South Trailer Storage** - This work consists of creating a 120' x 360' asphalt storage area for tractor trailers, and driveway connection to the proposed Vista Development Inc. warehouse access drive.

- New paved parking and driveway = 48,405 S.F.

Net Change = 48,405 S.F. Additional Impervious Area

C. **West Access Driveway Removal** - This work consists of removing approximately 680 L.F. of existing 12' wide asphalt paved driveway located along the west side of the existing warehouse building. This area will be returned to pervious surface by replacement with washed gravel between the existing warehouse and proposed Vista Development Inc. warehouse connections, and grassed area adjoining the existing warehouse on the northwest corner and southwest corner.

- Removal of existing paved driveway = 8,160 S.F.

Net Change = 8,160 S.F. Reduction Impervious Area

The overall net change resulting from the proposed sitework is an additional 44,725 S.F. of impervious area being paved surfaces.

III. CHARACTERISTICS OF RUNOFF

Rainfall Criteria:

The design storm chosen to determine the quantity of rainfall is described by using two variables: the return period and duration. The return period or recurrence interval is the probable period of time within which combinations of intensity and duration repeat themselves. The duration is the time during which rainfall prevails at that rate. The storm frequency used to determine peak runoff rates summarized in this report is the two year storm. The two year design storm corresponds with the minimum state stormwater management criteria presented in the Virginia Erosion and Sediment Control Handbook.

The procedure used to estimate peak runoff rates is the "rational method". This method is an accepted standard design procedure recommended in the Virginia State Drainage Design Manual for small drainage areas. For determining the runoff volume to design the proposed BMP applications, the first one-inch of runoff from impervious areas is used. This criteria is consistent with common practice to accommodate the "first flush" runoff from impervious areas which according to various authoritative studies contain the predominant amount of pollutant loadings that can be effectively mitigated.

Stormwater Runoff:

All proposed site improvements with the exception of a portion of the north access driveway widening will drain to BMP infiltration facilities. The arrangement of existing improvements and topography in this immediate area preclude placement of an acceptable BMP facility, therefore, storm runoff from this additional paved area (1600 S.F. net increase) will drain into the existing storm sewer system. Runoff volume from the remaining new site improvements will be directed to the proposed infiltration trenches.

The proposed infiltration facilities have excess capacity over the State minimum two year design storm runoff volume computed using the rational

method based on net resultant change in amount of newly created impervious area and volume requirements based on net change of impervious areas.

The following summary lists the two year design storm peak runoff rates and volumes as computed by the standard rational method for peak rates, the Virginia Soil Conservation Service modified rational method for runoff volumes, and the first one-inch of runoff volume method.

Net area of impervious improvements	44,725 S.F. (1.03 acres)
Runoff coefficient	0.20 Existing condition
	0.90 Improved condition
Time of concentration	7 Minutes
Intensity for two year storm	5.25 Inches/hr.

Rational Method: Q = CIA
Q = 1.08 CFS 2 year existing condition
Q = 4.87 CFS 2 year improved condition

SCS Modified Rational Method
Volume of runoff required based on 2 year storm = 3,496 CF

First one-inch runoff Method
Volume required based on net area of impervious surface = 3,578 CF
Volume provided by proposed infiltration facilities = 5,838 CF

The above summary demonstrates that the proposed infiltration facilities have a 67% capacity excess to accommodate runoff volume predicted by conventional rational method and a 63% capacity excess computed by the first one-inch volume method. Further, since 97% of the net impervious improvement areas resulting from the new sitework will drain to the proposed infiltration facilities, there will be no impact on the capacity of existing storm systems presently in place.

Nonpoint Pollution:

When a comparison of quality characteristics of storm runoff as a response to urbanization versus existing conditions is made, the order of magnitude of percentage increase in pollutant loadings is directly associated with the intensity of development. Typically natural areas are developed or converted

to buildings, roads, parking and driveways which does not allow rainfall to percolate into the soil. As a result, this rainfall in converted to direct runoff which conveys sediment and other pollutants as washoff from the impervious areas to receiving drainage systems. This pollutant washoff can adversely affect the quality of the downstream receiving waters. In this case the development, or site improvements proposed for Owens-Illinois consists of new construction of extending paved areas and demolition of existing sitework which results in an overall increase of impervious area and rainfall washoff directed to drainageways ultimately conveying this runoff to tributaries of the proposed Ware Creek Reservoir.

The James City County Design Manual for Run-Off Analysis lists sediment and phosphorus as nonpoint pollutants which must be addressed by Best Management Practices. The Design Manual further categorizes development land use, soil type classifications and pollution loading rates which are to be used in predicting overall pollutant loadings. Since the site is currently developed as industrial usage and the proposed improvements constitute a minor overall change in land usage and density, the pre-development and post development conditions for determining pollutant volumes were determined to be identical. The total loading volumes are tabulated below for sediment and total phosphorus, computed using the Design Manual loading rates for industrial usage, medium imperviousness and sandy loam soils, applied to the net addition of impervious area to the overall complex based on individual improvements proposed with no BMP practices.

SUMMARY OF UNCONTROLLED POLLUTANT LOADINGS

Sediment:	Impervious Area	= 1.03 acres
	Loading Rate	= 0.16 tons/acre/yr
	Total Loading	= 1.03 x 0.16 = 0.16 tons/yr
Total Phosphorus:	Impervious Area	= 1.03 acres
	Loading Rate	= 1.2 lbs/acre/yr
	Total Loading	= 1.03 x 1.2 = 1.24 lbs/yr

IV. POLLUTION MITIGATION AND PERFORMANCE CRITERIA

Introduction:

Studies in the development of pollution and runoff control practices have addressed various control methodologies for water quality management. The State Water Control Board Best Management Practices Handbook contains a collection of practices that have been determined to have the greatest potential for application in Virginia. These practices deal with various aspects of water quality, runoff volume and discharge control. Certain practices rely on physical structures while others involve establishment and maintenance of vegetative controls. The practices contained in the BMP Handbook have been divided into various basic categories each representing different control methodologies. The categories applicable to the Owens-Illinois site improvements are described as follows:

A. Source Controls are nonstructural measures that control nonpoint pollution by reducing the generation and accumulation of potential runoff contaminants at or near their source. Examples are solid waste collections and disposal, fertilizer management activities, street-parking lot sweeping and utilization of grassed filter areas.

B. Volume Controls are multipurpose structural measures that reduce the volume and rate of runoff and associated nonpoint pollutant loading by diverting stormwater to detention storage and the soil profile where pollutant removal can occur through natural physical and biological processes. Examples are infiltration improvements.

In addition to these control categories, minimum statewide standards for erosion and sediment control practices have been established by the Virginia Soil and Water Conservation Commission and are contained in the Virginia Erosion and Sediment Control Handbook. The Handbook contains minimum design criteria, standards, and specifications for numerous conservation practices.

99132_OWENS_ILLINOIS_SITE_IMPROVEMENTS - 025

These practices account for perimeter control, slope protection, sediment trapping, drainageway and stream protection, temporary stabilization, and permanent stabilization. James City County has adopted the minimum statewide standards for compliance of any development related land disturbing activity. Additionally, any such activity cannot commence without an approved erosion and sediment control plan for that activity. The purpose of the plan and control measures is to preclude the transport offsite of all waterborne sediments resulting from onsite construction activities.

Control Practices:

Practices in each of the above described categories, in addition to basic erosion and sediment control, are applicable to the overall Owens-Illinois site improvement project.

The primary measure for pollutant mitigation will be the proposed infiltration facilities. Infiltration measures are typically subsurface structures that allow quick penetration of surface runoff into the underlying soil profile, usually by utilizing a stone material with a large voids ratio in order to provide some measure of temporary storage. Through the method of infiltration, pollutant removal is assured to occur within the soil profile by filtering and aerobic decomposition. Designed infiltration measures offer a way to restore the hydrologic balance on a developed site by providing a facsimile of the natural process of infiltration.

Infiltration structures usually involve a trench filled with aggregate, that may receive inflow from surface runoff as well as a pipe or other inlet structure. Outflow usually occurs via infiltration through the soils below the bottom of the facility. The usage of infiltration practices depends upon various site conditions to determine the potential for positive results. These conditions include soil texture and related seepage rates, depth to seasonal high groundwater table and topographic character of the site including the slope and nature of the soil (natural or fill).

Infiltration practices are generally applicable where the subsoil is sufficiently permeable to provide a reasonable rate of infiltration, and where the water table is sufficiently lower than the design depth of the trench facility.

According to the Soil Conservation Service Soil Survey mapping, the soils in the area of the proposed infiltration facilities exhibit a permeability ranging from 0.60 in/hr to 6.0 in/hr and a seasonal high water table depth greater than 6.0 ft. Onsite soil borings taken at various locations of proposed BMP facilities revealed the soil complex to be a Loamy Sand and Sandy Clay Loam at depths ranging from 2.0′ to 3.0′ below existing grade. The estimated percolation rates for these soils range from 1.7 in/hr to 3.0 in/hr. Therefore these soils are well suited for the BMP infiltration applications proposed.

The James City County Design Manual for Run-Off Analysis implies the effectiveness of infiltration practices will range from 75% to 90% reduction of sediment and phosphorus loading from the first one-inch of runoff from impervious surfaces. Also according to the Manual, the use of grassed filter strips will also provide a nominal reduction in initial loadings. Since the proposed infiltration trenches are designed with grassed filter strips adjoining, a value of 90% reduction for sediment and a value of 75% reduction for phosphorous was used to compute overall effectiveness of the proposed BMP facilities. These values were agreed upon by the James City County Codes Compliance Engineer. The following is a summary of volume capacities of the BMP measures proposed and capacity requirements based on site improvements.

- Total volume of infiltration facilities proposed 5,838 CF
- Total impervious area facilities can accommodate 72,970 SF
- Total net impervious area of proposed improvements 44,725 SF

Based on the preceding, there is a net available capacity of the infiltration facilities to accommodate an additional 28,245 SF of impervious site area.

This additional site area, being existing paved areas, was redirected from the existing storm sewer system into the infiltration facilities.

The following is a summary of controlled loading rate reductions as a result of the proposed BMP infiltration facilities tabulated for the net additional impervious site improvements and the redirected existing impervious improvements.

CONTROLLED POLLUTANT LOADINGS

Net additional impervious site improvements:

Sediment:	0.16 tons/yr @ 90% efficiency	=	0.14 tons/yr reduction
Phosphorus:	1.24 lbs/yr @ 75% efficiency	=	0.93 lbs/yr reduction

Redirected existing impervious site improvements:

Sediment:	0.10 tons/yr @ 90% efficiency	=	0.09 tons/yr reduction
Phosphorus:	0.78 lbs/yr @ 75% efficiency	=	0.59 lbs/yr reduction

By comparing the controlled pollutant loadings attained by the infiltration facilities to the uncontrolled loadings predicted for the additional site impervious areas, will yield a net effectiveness of overall pollutant removal anticipated.

NET POLLUTANT LOADING REDUCTION

Sediment:

Uncontrolled conditions	= 0.16 tons/yr
Controlled conditions-BMP reduction	= 0.23 tons/yr
Net Loading	-0.07 tons/yr

Phosphorus:

Uncontrolled conditions	= 1.24 lbs/yr
Controlled conditions-BMP reduction	= 1.52 lbs/yr
Net Loading	-0.28 lbs/yr

Summary

This analysis demonstrates that the proposed BMP facilities will produce a **net gain in runoff quality** by virtue of the sitework proposed for the Owens-Illinois complex. This is attained by redirecting a portion of the existing complex to the proposed BMP facilities. Additional measures shall be employed during the construction phases and final stabilization procedures in accordance with the James City County Erosion and Sedimentation Ordinances to control temporary erosion and siltation.

99132_OWENS_ILLINOIS_SITE_IMPROVEMENTS - 028

APPENDIX A

THE DeYOUNG-JOHNSON GROUP, INC.
P.O. Box 3505
WILLIAMSBURG, VIRGINIA 23187
(804) 253-0673

JOB #1900371 OWENS - ILLINOIS
SHEET NO. 1 OF
CALCULATED BY L. PENGI DATE 5/23/90
CHECKED BY DATE
SCALE

SITE IMPROVEMENT AREA Ⓐ - NORTH ACCESS DRIVEWAY WIDENING

AREA OF PROPOSED WIDENING 560'x8' = 4480 SF

Required volume for BMP Infiltration trench @ 1" Runoff

4480 SF x 0.08' = 359 CF

Trench Design - Provide required volume plus additional volume from existing driveway along front of building

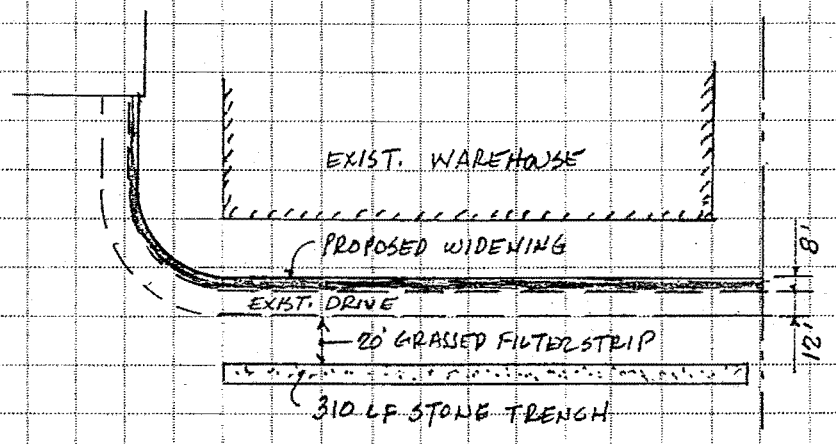

Design Volume = 310' x 20' x 0.08' = 496 CF (496 ÷ 310 = 1.6 CF PER LF TRENCH)

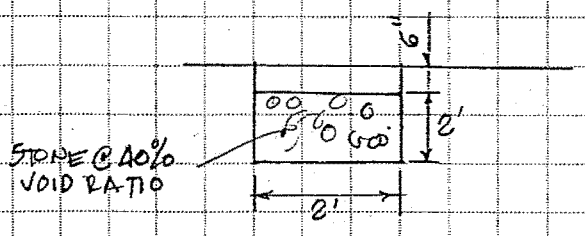

Trench volume per L.F. = 2' x 2' x 0.40 = 1.6 CF

THE DeYOUNG-JOHNSON GROUP, INC.
P.O. Box 3505
WILLIAMSBURG, VIRGINIA 23187
(804) 253-0673

JOB #1900371 OWENS-ILLINOIS
SHEET NO. 2 OF
CALCULATED BY L. PENCI DATE 5/23/90
CHECKED BY DATE
SCALE

SITE IMPROVEMENT AREA (B) - SOUTH TRAILER STORAGE AREA

AREA OF PROPOSED PAVING = 48,405 SF

Required Volume for BMP Infiltration Trench @ 1" Runoff

48,405 SF x 0.08' = 3873 CF

Trench Design - Provide required volume plus additional volume from existing access driveway, concrete pad storage area and roofed storage enclosure.

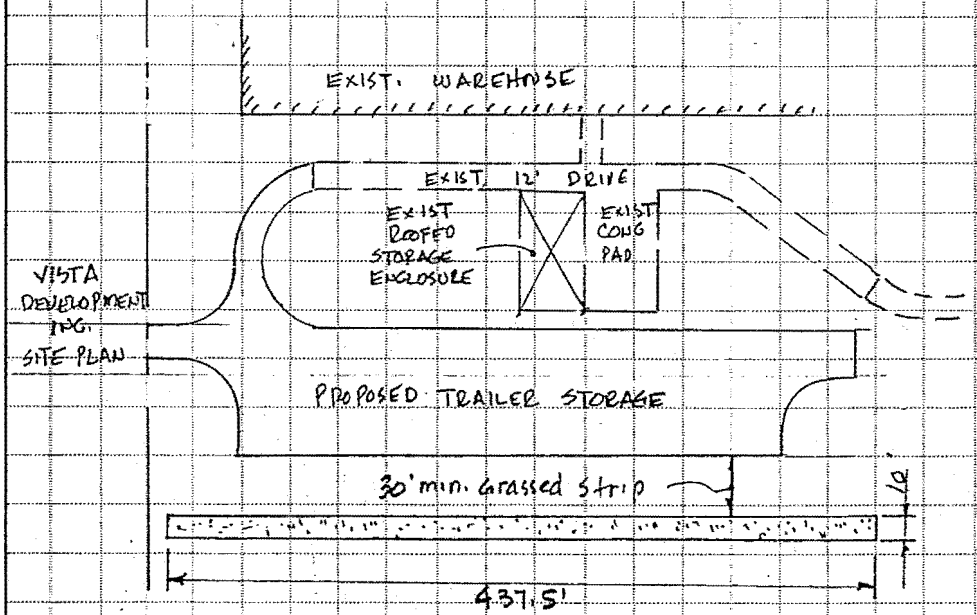

PROPOSED PAVING = 48,405 SF
EXIST. DRIVEWAY = 8365 SF
EXIST. CONC. PAD = 6000 SF
EXIST ROOFED ENCL. = 4000 SF
TOTAL = 66,770 SF

Design Volume = 66,770 SF x 0.08'
= 5342 CF

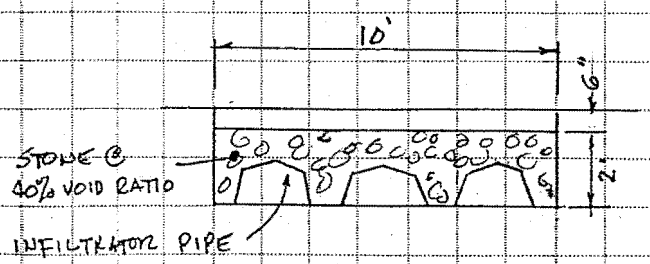

Trench volume = 10'x2' - (3x2.35) x 0.40 = 5.18 CF
Infiltrator volume 3@2.35 = 7.05 CF
Total = 12.23 CF/LF

Trench Length = 5342 CF ÷ 12.23 = 437 LF min.
use 70 pipe length @ 6.25 LF = 437.5 LF

APPENDIX B

SOIL CONSERVATION SERVICE MODIFIED RATIONAL METHOD
OWENS-ILLINOIS SITE IMPROVEMENTS

DESIGN STORM FOR ANALYSIS = 2 YEAR
DRAINAGE AREA (ACRES) = 1.03
TIME OF CONCENTRATION - UNDEVELOPED (MIN.) = 7
TIME OF CONCENTRATION - DEVELOPED (MIN.) = 7
RUNOFF COEFFICIENT - UNDEVELOPED = .2
RUNOFF COEFFICIENT - DEVELOPED = .9

COMPUTATION RESULTS
REQUIRED STORAGE VOLUME FOR INFILTRATION DESIGN = 3496 CUBIC FEET
CRITICAL STORM LENGTH = 41 MINUTES
INFILTRATION DRAWDOWN = 2 DAY AVERAGE

APPENDIX C

VI. INFILTRATION PITS AND TRENCHES

Measure: Excavated pits or trenches, back filled with sand and/or graded aggregates, in which stormwater runoff is collected for temporary storage and infiltration.

Purpose:

1. To reduce the runoff volume and peak discharge rate from a site.

2. To filter contaminants out of runoff before it reaches receiving waters.

Conditions Where Practice Applies: Where the subsoil is sufficiently permeable to provide a reasonable rate of infiltration, and where the water table is sufficiently lower than the design depth of the facility to prevent pollution of the groundwater.

Concept: Infiltration may be incorporated as one part of an overall runoff control system utilizing several different techniques. Infiltration pits vary in depth from about six to several hundred feet, depending upon the depth of the permeable soil strata and the depths to groundwater and bedrock. Infiltration trenches consist of long narrow excavations with depths normally less than 6 feet. Some type of filtering mechanism is needed to prevent the infiltration facility from becoming clogged with sediment or debris.

Design Criteria:

1. Grease, oil, floatable organic materials, and settleable particles should be removed from runoff water before it enters the infiltration facility. Runoff filtering devices such as grass filter strips, sediment traps, grease traps, and filter fabric may be used to remove objectionable materials.

2. Infiltration facilities shall be sized to accommodate the first one-inch of runoff from impervious areas of the development site.

3. Most infiltration facilities are designed with aggregate fillers. VDH&T No. 57 aggregate is often used. This aggregate has a void ratio of 0.40; therefore, the excavation should be 2.5 times the required storage volume.

4. Infiltration facilities shall be designed to completely drain within 5 days.

5. Unless the facility is designed to accommodate the total amount of anticipated runoff from a design storm, provisions shall be made for overflow. The capacity and cost of overflow discharge systems can be reduced by allowing temporary storage space above the infiltration trenches.

6. A soils analysis to determine percolation rates is required. Existing soil surveys may provide an estimate of soil percolation rates; however, percolation tests will need to be performed on soils at the bottom of the infiltration facility.

7. Infiltration facilities shall be located only in areas where they will be above the groundwater table at all times.

Maintenance: Preventive maintenance is vital to the continued effectiveness of infiltration facilities. The use of measures to filter out suspended materials that might clog the facilities is necessary. Periodic cleaning or replacement of filter fabric will be necessary as determined by inspections.

Effectiveness: The effectiveness of this practice for runoff and pollution control is dependent upon the size and design of the infiltration facility. Removal efficiencies will range from 75-90% for both suspended solids and phosphorus.

IX. GRASSED FILTER STRIPS

Measure: A strip or area of vegetation for removing sediment, organic matter, and other pollutants from runoff and waste water.

Purpose: To remove sediment and other pollutants from runoff or waste water by filtration, deposition, infiltration, absorption, decomposition, and volatilization, thereby reducing pollution and protecting the environment.

Conditions Where Practice Applies: Most applicable in new low-to-moderate density developments where the percentage of impervious cover is to be relatively small, and natural drainage systems can more nearly accommodate post-development runoff. The successful application of this practice is dependent upon anticipated runoff velocities, steepness of slopes, soil porosity and erodibility, water table depth, the type of grass selected for surface cover, and proper maintenance.

Concept: This practice involves the concept of using grassed areas for managing stormwater runoff. All of the following applications of this concept tend to maintain the natural drainage characteristics of the site, allow for infiltration of at least part of the runoff, and filter some contaminants out of the water.

1. Grassed waterways: Directing concentrated flows of surface runoff through grass-covered drainage swales or channels, where the grass provides a non-erodible channel lining that retards the flow velocity.

2. Filter Strips: Directing sheet flows of surface runoff across grass buffer strips that retard flow velocities and filter out particulate contaminants.
3. Seepage Areas: Directing surface runoff into small grass-covered seepage areas that infiltrate the water and filter out particulate contaminants. The grass will also tend to absorb some of the soluble pollutants.

Design Criteria:

1. Grassed Water Ways -

   - Grassed waterways may be built in parabolic, trapezoidal, or V-shaped cross sections. Side slopes should not exceed 3:1 to enable the channel to be mowed.

   - Waterways should be located at areas of suitable grade where soil moisture conditions are favorable for vegetative growth. Natural swales should be followed, if possible.

   - Size and location of grass waterways will depend on estimated runoff, gradient, the space allowable for the waterways and soil erodibility. Flow velocities on well-established soil of good quality generally do not exceed 5-6 feet per second except for special situations.

   - Waterways shall at a minimum be designed to accommodate the peak flow expected from a storm of at least 2-year frequency before over bank flow occurs. The flow-retarding factor of different vegetation should be considered in the design. Guidelines for the design of vegetated waterways are presented in Chapter III of the 1980 VIRGINIA EROSION AND SEDIMENT CONTROL HANDBOOK.

2. Filter Strips - Strips of close growing grasses established at the perimeter of disturbed or impervious areas to intercept runoff in sheet flow and remove particulate contaminants. The vegetation slows the sheet flow, causing heavy particulates to fall out. Infiltration is also enhanced.

   - Grass area filter strips shall be generally on the contour and sufficiently wide to pass the peak flow (based on a 2-year storm) at a depth of 0.5 inches or less. Flow length shall be sufficient to provide at least 15 minutes flow through time.

   - At a minimum, overland flow filter strips shall be installed on natural or constructed slopes of 2 to 6 percent. They shall have minimum flow lengths of 100 ft. on 2 percent slopes proportionately up to 300 ft. on 6 percent slopes.

3. Seepage Areas - Seepage areas may be created by excavating shallow depressions in the land surface or by constructing a system of dikes or berms to temporarily pond water over permeable soils. They are generally limited to use below small drainage areas due to their space requirements. Collecting and infiltrating runoff from small paved areas and rooftops are typical applications.

   - Seepage areas should be used only where soils have moderate to high permeability - at least 0.6 inches per hour.

   - Seepage areas are to be lined with dense turf grass which will facilitate infiltration, provide some pollutant uptake, create an attractive landscape and allow for other uses of the area during dry weather.

   - Seepage areas should be designed with suitable overflow systems.

   - Seepage areas should also be kept as free as possible from broad deposition of sediment and other particulate matter which can clog the soil and reduce the infiltration capacity. A small stilling basin is recommended.

Maintenance: Maintenance is a vital factor in preserving an adequate vegetative cover. The 1980 VIRGINIA EROSION AND SEDIMENT CONTROL HANDBOOK has recommendations for maintenance fertilization and mowing needs.

Grassed waterways need to be inspected periodically, and especially after large storms, to determine whether there are erosion problems that need to be controlled, to remove accumulated debris, and to check the condition of the vegetation.

It is important to maintain soil porosity of filter strips and seepage areas. This can be accomplished by periodically removing the thatch formed along the ground surface and/or mechanically aerating the area several times a year. Sediment should be removed at regular intervals to prevent soil clogging accumulations.

Effectiveness:

1. Grassed Waterways - The primary purpose of grass-lined waterways is to reduce the velocity of concentrated runoff while protecting against erosion of the channel. Removal efficiencies for phosphorus and suspended solids removal are not well documented.

2. Filter strips and seepage areas - These facilities are effective in removing particulate pollutants from runoff. Removal efficiencies will range from 50 to 95 percent for both phosphorus and suspended solids.

APPENDIX D

UNCONTROLLED NONPOINT POLLUTION RATES: SEDIMENT

LAND USE	PERCENT IMPERVIOUSNESS	ANNUAL LOADING RATE (TONS/ACRE/YR) CLAY LOAM SOILS	SILT LOAM SOILS	LOAM SOILS	SANDY LOAM SOILS
ESTATE SINGLE FAMILY RESIDENTIAL					
A. 0.05 DU/Acre	1.5%	0.08	0.07	0.06	0.02
B. 0.10 DU/Acre	3%	0.08	0.08	0.06	0.03
C. 0.20 DU/Acre	6%	0.10	0.09	0.08	0.04
LARGE-LOT SINGLE FAMILY RESIDENTIAL					
A. 0.5 DU/Acre	9%	0.11	0.11	0.09	0.06
B. 1.0 DU/Acre	12%	0.12	0.12	0.11	0.08
C. 2.0 DU/Acre	18%	0.15	0.15	0.14	0.11
MEDIUM DENSITY SINGLE FAMILY RESIDENTIAL					
A. 3.0 DU/Acre	20%	0.16	0.16	0.15	0.12
B. 4.0 DU/Acre	25%	0.19	0.18	0.17	0.15
C. 5.0-6.0 DU/Acre	35%	0.23	0.23	0.22	0.20
TOWNHOUSE/GARDEN APT. RESIDENTIAL					
A. 6 DU/Acre	35%	0.27	0.26	0.24	0.21
B. 8-10 DU/Acre	40%	0.29	0.29	0.27	0.23
C. 10-20 DU/Acre	50%	0.33	0.33	0.31	0.28
INDUSTRIAL					
A. MEDIUM IMPERVIOUSNESS	60%	0.18	0.18	0.18	0.16
B. HIGH IMPERVIOUSNESS	80%	0.22	0.22	0.22	0.22
SUBURBAN SHOPPING CENTER	90%	0.24	0.24	0.24	0.24
CENTRAL BUSINESS DISTRICT	95%	0.25	0.25	0.25	0.25
CROPLAND					
A. CONVENTIONAL TILLAGE	1%	2.10	1.80	1.44	0.79
B. MINIMUM TILLAGE	1%	0.89	0.76	0.64	0.45
COW PASTURE	1%	0.07	0.06	0.05	0.01
FOREST	1%	0.07	0.06	0.05	0.01
IDLE LAND	1%	0.07	0.05	0.05	0.01

UNCONTROLLED NONPOINT POLLUTION LOADING RATES: TOTAL PHOSPHORUS

LAND USE	PERCENT IMPERVIOUSNESS	UNCONTROLLED LOADING RATE (LBS/ACRE/YR) CLAY LOAM SOILS	SILT LOAM SOILS	LOAM SOILS	SANDY LOAM SOILS
ESTATE SINGLE FAMILY RESIDENTIAL					
A. 0.05 DU/Acre	1.5%	0.3	0.3	0.3	0.2
B. 0.10 DU/Acre	3%	0.3	0.3	0.3	0.2
C. 0.20 DU/Acre	6%	0.4	0.4	0.4	0.3
LARGE-LOT SINGLE FAMILY RESIDENTIAL					
A. 0.5 DU/Acre	9%	0.8	0.8	0.8	0.5
B. 1.0 DU/Acre	12%	0.9	0.9	0.8	0.6
C. 2.0 DU/Acre	18%	1.0	1.0	0.9	0.7
MEDIUM DENSITY SINGLE FAMILY RESIDENTIAL					
A. 3.0 DU/Acre	20%	1.0	1.0	1.0	0.8
B. 4.0 DU/Acre	25%	1.1	1.1	1.1	0.9
C. 5.0-6.0 DU/Acre	35%	1.3	1.3	1.3	1.1
TOWNHOUSE/GARDEN APT. RESIDENTIAL					
A. 6 DU/Acre	35%	1.6	1.5	1.4	1.2
B. 8-10 DU/Acre	40%	1.7	1.6	1.5	1.5
C. 10-20 DU/Acre	50%	1.8	1.8	1.7	1.7
INDUSTRIAL					
A. MEDIUM IMPERVIOUSNESS	60%	1.2	1.2	1.2	1.2
B. HIGH IMPERVIOUSNESS	80%	1.4	1.5	1.5	1.4
SUBURBAN SHOPPING CENTER	90%	1.6	1.6	1.6	1.6
CENTRAL BUSINESS DISTRICT	95%	2.7	2.7	2.7	2.7
CROPLAND					
A. CONVENTIONAL TILLAGE	1%	4.9	4.2	3.5	2.3
B. MINIMUM TILLAGE	1%	1.8	1.5	1.4	1.1
COW PASTURE	1%	0.5	0.5	0.5	0.3
FOREST	1%	0.1	0.1	0.1	0.1
IDLE LAND	1%	0.2	0.2	0.2	0.1

RUN-OFF ANALYSIS

FOR

OWENS-ILLINOIS GLASS CONTAINER, INC.
TOANO, JAMES CITY COUNTY, VIRGINIA

APRIL 2, 1990
COMMISSION NO. 1900210

COMMONWEALTH OF VIRGINIA
DANIEL J. DE YOUNG
No.
3517
CERTIFIED PROFESSIONAL ENGINEER

THE DEYOUNG-JOHNSON GROUP, INC.

RUN-OFF ANALYSIS

FOR

OWENS-ILLINOIS GLASS CONTAINER, INC.
TOANO, JAMES CITY COUNTY, VIRGINIA

APRIL 2, 1990
COMMISSION NO. 1900210

Louis M. Penci, CLS
Project Hydrologist

Daniel J. DeYoung, P.E.
Principal Engineer

TABLE OF CONTENTS

		PAGE
I.	INTRODUCTION	1
	Scope of Report	1
	Summary of Findings	1
II.	DESCRIPTION OF PROJECT	2
	Location and Land Use	2
	Topography and Soils	2
	Proposed Site Improvements	3
III.	CHARACTERISTICS OF RUNOFF	6
	Rainfall Criteria	6
	Stormwater Runoff	6
	Nonpoint Pollution	7
IIII.	POLLUTION MITIGATION AND PERFORMANCE CRITERIA	9
	Introduction	9
	Control Practices	10
	Summary	12

APPENDIX A: Design data and criteria details for the infiltration trenches.

APPENDIX B: Computer output SCS modified rational method.

I. INTRODUCTION

Scope of Report:

This run-off analysis report for Owens-Illinois Glass Container, Inc., James City County, has been prepared in accordance with the requirements and guidelines as set forth in Article X. Overlay Districts, James City County Zoning Ordinance and Design Manual for Run-Off Analysis Reservoir Protection Overlay District. The study addresses a descriptive critique of the proposed site improvements, characteristics of pre-development natural run-off and projected post-development runoff, characteristics of pollutant loadings, measures to reduce the loadings both during and after construction, proposed run-off control and reservoir protective measures, and performance criteria of the control practices. This study report is supplemented by the site improvement plans which depict the location and extent of individual site changes and includes construction details pertaining to the Best Management Practices chosen to mitigate effects of the proposed site alterations.

Summary of Findings:

Based upon application of BMP practices and specific control measures as presented in this study, it is anticipated that a **net gain in quality of stormwater runoff** from the Owens Illinois complex can be expected. This is accomplished by providing BMP applications to accommodate impervious area runoff from newly created site improvements and also a portion of the existing building facility. **There will be no additional sediment or phosphorus pollutant loading from the complex as a direct result of the proposed site improvements.**

99132_OWENS_ILLINOIS_SITE_IMPROVEMENTS - 046

II. DESCRIPTION OF PROJECT

Location and Land Use:

Owens-Illinois Glass Container, Inc. is sited on a 70.7 acre parcel of land situate on the south side of S.R. 754 Industrial Boulevard approximately 950 feet east of S.R. 60 in the Toano section of James City County. The property is identified as parcel number (1-15) on tax map sheet (12-4) and is zoned M-2 and RP. Since the plant complex is contained in the Reservoir Protection Overlay District (RP) any proposed development creating 5000 S.F. or more of impervious surfaces requires issuance of a Special Use Permit and approval of a runoff analysis in accordance with Article X, Section 20-533 of the James City County Ordinance.

The Owens-Illinois complex comprises existing manufacturing, glass recycling, and warehouse facilities including ancillary onsite parking areas, various service drives, and a rail service spur connection. Approximately 37% of the site is wooded and 40% being open grassed areas. The remaining 23% of the complex, in its present state, is identified as impervious surfaces: existing buildings (11%) and associated parking and drives (12%).

Topography and Soils:

The general land form in the area varies, ranging from flat to gentle slopes (0-3%) to steeper slopes (above 8%) found along the natural drainage ravines with a few instances of steep slopes occurring onsite in conjunction with construction of the original plant complex and rail spur. The site slopes in a general easterly direction with drainage accommodated by overland flow, underground storm sewers and man-made ditches and channels directed to natural ravines of France Swamp, a tributary of the proposed Ware Creek reservoir.

The soils on the site in the immediate area of the plant complex are classified as Kempsville-Emporia Fine Sandy Loam and Suffolk Fine Sandy Loam as depicted on Map Sheet 5 of the Soil Survey of James City and York Counties

99132_OWENS_ILLINOIS_SITE_IMPROVEMENTS - 047

and the City of Williamsburg prepared by the United States Department of Agriculture, Soil Conservation Service. These soils consist of deep, gently sloping, well drained soils with moderate permeability. The erosion hazard in these series is moderate.

Proposed Site Improvements:

Owens-Illinois proposes four (4) areas of site improvements. These improvements include two minor building additions, a picnic shelter, and a driveway extension to the existing employee parking area. The site improvements consist of creating impervious roof and paved areas and in two areas removal of existing impervious areas replacing with pervious grassed area. The following is a summary of each proposed improvement area listing the extent of new site work, demolition of existing site items, and net overall change in amount of impervious areas.

A. Systems Building Addition - This work consists of a 30' x 74.5' addition to the existing systems building, a new power transformer pad site, and relocation of the adjacent service drive and service ramp.

■ Building Addition	2,238 S.F.
■ Relocated Paved Service Drive	3,360 S.F.
■ New Concrete Service Ramp	561 S.F.
■ New Concrete Paved Ditch	568 S.F.
■ New Stone Pad Area for Power Transformers	3,843 S.F.
Total New Impervious Area	**10,570 S.F.**

■ Removal Existing Service Drive	3,240 S.F.
■ Removal Existing Concrete Service Ramp	612 S.F.
■ Removal Existing Concrete Paved Ditch	375 S.F.
Total Removal Impervious Area	**4,227 S.F.**

Net Change (10,570 S.F.-4,227 S.F.) = 6,343 S.F. Additional Impervious Area.

B. Picnic Shelter - This work consists of a 43.75′ x 56.00′ roof structure over new concrete slab.

- Picnic Shelter (43.75′ x 56.00′) = 2,450 S.F.

Net Change = 2,450 S.F. Additional Impervious Area.

C. Parking lot driveway extension - This work consists of approximately 255 L.F. of parking area driveway extension connecting to the existing Industrial Boulevard entrance road, removal of a portion of the existing parking area, and removal of approximately 215 L.F. an existing compacted soil access roadway.

■ New Paved Driveway	5,915 S.F.
■ New Compacted Soil Access Roadway	540 S.F.
Total New Impervious Area	**6,455 S.F.**
■ Removal Existing Compacted Soil Access Roadway	2,925 S.F.
■ Removal Existing Parking Pavement	160 S.F.
Total Removal Impervious Area	**3,085 S.F.**

Net Change (6,455 S.F. - 3,085 S.F.) = 3,370 S.F. Additional Impervious Area.

D. Elevated machine room addition - This work consists of a 25′ x 68.2′ elevated second story addition to the main building. The existing ground and improvements below the addition will not be disturbed except for placement of support structure.

■ Building Addition	1,705 S.F.
■ Existing Concrete Area Below Addition To Remain In Place	675 S.F.

Net Change (1,705 S.F. - 675 S.F.) = 1,030 S.F. Additional Impervious Area.

The overall net change resulting from the proposed sitework is an additional 13,193 S.F. of impervious surfaces being a combination building roof area (6,393 S.F.) and paved area (6,800 S.F.). Existing impervious areas which are to be removed and not constructed upon will be topsoiled and seeded and returned to grassed open space.

III. CHARACTERISTICS OF RUNOFF

Rainfall Criteria:

The design storm chosen to determine the quantity of rainfall is described by using two variables: the return period and duration. The return period or recurrence interval is the probable period of time within which combinations of intensity and duration repeat themselves. The duration is the time during which rainfall prevails at that rate. The storm frequency used to determine peak runoff rates summarized in this report is the two year storm. The two year design storm corresponds with the minimum state stormwater management criteria presented in the Virginia Erosion and Sediment Control Handbook.

The procedure used to estimate peak runoff rates is the "rational method". This method is an accepted standard design procedure recommended in the Virginia State Drainage Design Manual for small drainage areas. For determining the runoff volume to design the proposed BMP applications, the first one-inch of runoff from impervious areas is used. This criteria is consistent with common practice to accommodate the "first flush" runoff from impervious areas which according to various authoritative studies contain the predominant amount of pollutant loadings that can be effectively mitigated.

Stormwater Runoff:

All proposed site improvements with the exception of the elevated machine room addition will drain to BMP infiltration facilities designed to accommodate the resulting first one-inch of runoff volume. The arrangement of existing improvements below the machine room addition preclude placement of an acceptable BMP facility, therefore, storm runoff from this additional roof area (1030 S.F. net increase) will drain into the existing storm sewer system. Runoff volume from the remaining new site improvements will be directed to the proposed infiltration trenches.

The proposed infiltration facilities have excess capacity over the State minimum two year design storm runoff volume computed using the rational method based on net resultant change in amount of newly created impervious area.

The following summary lists the two year design storm peak runoff rates and volumes as computed by the standard rational method for peak rates and the Virginia Soil Conservation Service modified rational method for runoff volumes.

Net area of impervious improvements	13,193 S.F. (0.303 acres)
Runoff coefficient	0.20 Existing condition
	0.90 Improved condition
Time of concentration	5 Minutes
Intensity for two year storm	7.10 Inches/hr.

Rational Method: Q = CIA
Q = 0.43 CFS 2 year existing condition
Q = 1.94 CFS 2 year improved condition

SCS Modified Rational Method
Volume of runoff required based on 2 year storm = 998 CF

First one-inch runoff Method
Volume required based on net area of impervious surface = 1,580 CF

The above summary demonstrates that the proposed infiltration facilities have a 58% capacity excess to accommodate runoff volume predicted by conventional rational methods. Further, since 92% of the net impervious improvement areas resulting from the new sitework will drain to the proposed infiltration facilities, there will be relatively no impact on capacity of the existing storm systems presently in place.

Nonpoint Pollution:

When a comparison of quality characteristics of storm runoff as a response to urbanization versus existing conditions is made, the order of magnitude of percentage increase in pollutant loadings is directly associated with the intensity of development. Typically natural areas are developed or converted

to buildings, roads, parking and driveways which does not allow rainfall to percolate into the soil. As a result, this rainfall in converted to direct runoff which conveys sediment and other pollutants as washoff from the impervious areas to receiving drainage systems. This pollutant washoff can adversely affect the quality of the downstream receiving waters.
In this case the development, or site improvements proposed for Owens-Illinois consists of new construction of building additions, extending paved areas, and demolition of existing sitework which results in an overall increase of impervious area and rainfall washoff directed to drainageways ultimately conveying this runoff to tributaries of the proposed Ware Creek Reservoir.

The James City County Design Manual for Run-Off Analysis lists sediment and phosphorus as nonpoint pollutants which must be addressed by Best Management Practices. The Design Manual further categorizes development land use, soil type classifications and pollution loading rates which are to be used in predicting overall pollutant loadings. Since the site is currently developed as industrial usage and the proposed improvements constitute a minor overall change in land usage and density, the pre-development and post development conditions for determining pollutant volumes were determined to be identical. The total loading volumes are tabulated below for sediment and total phosphorus, computed using the Design Manual loading rates for industrial usage, medium imperviousness and sandy loam soils, applied to the net addition of impervious area to the overall complex based on individual improvements proposed with no BMP practices.

SUMMARY OF UNCONTROLLED POLLUTANT LOADINGS

Sediment:	Impervious Area	= 0.303 acres
	Loading Rate	= 0.16 tons/acre/yr
	Total Loading	= 0.303 x 0.16 = 0.05 tons/yr
Total Phosphorus:	Impervious Area	= 0.303 acres
	Loading Rate	= 1.2 lbs/acre/yr
	Total Loading	= 0.303 x 1.2 = 0.36 lbs/yr

IV. POLLUTION MITIGATION AND PERFORMANCE CRITERIA

Introduction:

Studies in the development of pollution and runoff control practices have addressed various control methodologies for water quality management. The State Water Control Board Best Management Practices Handbook contains a collection of practices that have been determined to have the greatest potential for application in Virginia. These practices deal with various aspects of water quality, runoff volume and discharge control. Certain practices rely on physical structures while others involve establishment and maintenance of vegetative controls. The practices contained in the BMP Handbook have been divided into various basic categories each representing different control methodologies. The categories applicable to the Owens-Illinois site improvements are described as follows:

A. Source Controls are nonstructural measures that control nonpoint pollution by reducing the generation and accumulation of potential runoff contaminants at or near their source. Examples are solid waste collections and disposal, fertilizer management activities, street-parking lot sweeping and utilization of grassed filter areas.

B. Volume Controls are multipurpose structural measures that reduce the volume and rate of runoff and associated nonpoint pollutant loading by diverting stormwater to detention storage and the soil profile where pollutant removal can occur through natural physical and biological processes. Examples are infiltration improvements.

In addition to these control categories, minimum statewide standards for erosion and sediment control practices have been established by the Virginia Soil and Water Conservation Commission and are contained in the Virginia Erosion and Sediment Control Handbook. The Handbook contains minimum design criteria, standards, and specifications for numerous conservation practices.

99132_OWENS_ILLINOIS_SITE_IMPROVEMENTS - 054

These practices account for perimeter control, slope protection, sediment trapping, drainageway and stream protection, temporary stabilization, and permanent stabilization. James City County has adopted the minimum statewide standards for compliance of any development related land disturbing activity. Additionally, any such activity cannot commence without an approved erosion and sediment control plan for that activity. The purpose of the plan and control measures is to preclude the transport offsite of all waterborne sediments resulting from onsite construction activities.

Control Practices:

Practices in each of the above described categories, in addition to basic erosion and sediment control, are applicable to the overall Owens-Illinois site improvement project.

The primary measure for pollutant mitigation will be the proposed infiltration facilities. Infiltration measures are typically subsurface structures that allow quick penetration of surface runoff into the underlying soil profile, usually by utilizing a stone material with a large voids ratio in order to provide some measure of temporary storage. Through the method of infiltration, pollutant removal is assured to occur within the soil profile by filtering and aerobic decomposition. Designed infiltration measures offer a way to restore the hydrologic balance on a developed site by providing a facsimile of the natural process of infiltration.

Infiltration structures usually involve a trench filled with aggregate, that may receive inflow from surface runoff as well as a pipe or other inlet structure. Outflow usually occurs via infiltration through the soils below the bottom of the facility. The usage of infiltration practices depends upon various site conditions to determine the potential for positive results. These conditions include soil texture and related seepage rates, depth to seasonal high groundwater table and topographic character of the site including the slope and nature of the soil (natural or fill).

99132_OWENS_ILLINOIS_SITE_IMPROVEMENTS - 055

Infiltration practices are generally applicable where the subsoil is sufficiently permeable to provide a reasonable rate of infiltration, and where the water table is sufficiently lower than the design depth of the trench facility.

According to the Soil Conservation Service Soil Survey mapping, the soils in the area of the proposed infiltration facilities exhibit a permeability ranging from 0.60 in/hr to 6.0 in/hr and a seasonal high water table depth greater than 6.0 ft for hydrologic soil group B. Therefore these soils are well suited for the BMP infiltration applications proposed.

The James City County Design Manual for Run-Off Analysis implies the effectiveness of infiltration practices will range from 75% to 90% reduction of sediment and phosphorus loading from the first one-inch of runoff from impervious surfaces. The following is a summary of volume capacities of the BMP measures proposed and capacity requirements based on site improvements.

- Total volume of infiltration facilities proposed 1,480 CF
- Total impervious area facilities can accommodate 18,500 SF
- Total net impervious area of proposed improvements 13,193 SF

Based on the preceding, there is a net available capacity of the infiltration facilities to accommodate an additional 5,307 SF of impervious site area. This additional site area, being the existing systems building roof area,was redirected from the existing storm sewer system into the infiltration facilities.

The following is a summary of controlled loading rate reductions as a result of the proposed BMP infiltration facilities tabulated for the net additional impervious site improvements and the redirected existing impervious improvements. It is noted that these efficiencies projected are based on a 75% reduction rate while the Design Manual indicates a 75% to 90% reduction. Therefore the figures calculated and shown are relatively conservative.

CONTROLLED POLLUTANT LOADINGS

Net additional impervious site improvements:

Sediment:	0.05 tons/yr @ 75% efficiency	=	0.04 tons/yr reduction
Phosphorus:	0.36 lbs/yr @ 75% efficiency	=	0.27 lbs/yr reduction

Redirected existing impervious site improvements:

Sediment:	0.02 tons/yr @ 75% efficiency	=	0.01 tons/yr reduction
Phosphorus:	0.14 lbs/yr @ 75% efficiency	=	0.11 lbs/yr reduction

By comparing the controlled pollutant loadings attained by the infiltration facilities to the uncontrolled loadings predicted for the additional site impervious areas, will yield a net effectiveness of overall pollutant removal anticipated.

NET POLLUTANT LOADING REDUCTION

Sediment:

Uncontrolled conditions	= 0.05 tons/yr
Controlled conditions-BMP reduction	= 0.05 tons/yr
Net Loading	0

Phosphorus:

Uncontrolled conditions	= 0.36 lbs/yr
Controlled conditions-BMP reduction	= 0.38 lbs/yr
Net Loading	-0.02 lbs/yr

Summary

This analysis demonstrates that the proposed BMP facilities will essentially produce a **net gain in runoff quality** by virtue of the sitework proposed for the Owens-Illinois complex. This is attained by redirecting a portion of the existing building complex to the proposed BMP facilities. Additional measures shall be employed during the construction phases and final stabilization procedures in accordance with the James City County Erosion and Sedimentation Ordinances to control temporary erosion and siltation.

APPENDIX A

THE DeYOUNG-JOHNSON GROUP, INC.
P.O. Box 197
WILLIAMSBURG, VIRGINIA 23187
(804) 253-0673

JOB # 1900210 OWENS - BROCKWAY
SHEET NO. ____ OF ____
CALCULATED BY PENZI DATE 3/27/90
CHECKED BY ____ DATE ____
SCALE ____

SITE IMPROVEMENT - AREA (A) SYSTEMS BUILDING ADDITION

AREA EXISTING SYSTEMS BUILDING 71.0 x 74.5 = 5290 SF
AREA PROPOSED ADDITION 30.0 x 74.5 = 2235 SF
AREA PROPOSED TRANSFORMER PAD 61.0 x 63.0 = 3843 SF
TOTAL = 11,368 SF

REQUIRED VOLUME FOR BMP INFILTRATION TRENCH @ 1" RUNOFF

11,368 SF x 0.08' = 909 CF

TRENCH DESIGN - CAPTURE 1" RUNOFF FROM EXIST. SYSTEMS BLDG & PROPOSED ADDITION

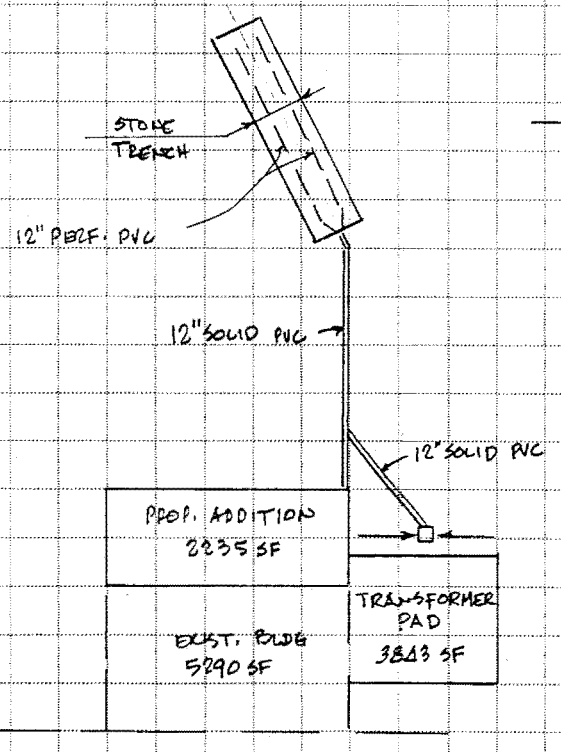

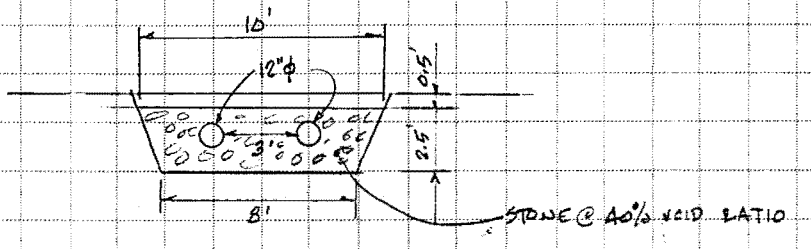

STORAGE PER FOOT OF TRENCH

12"φ PIPE 2@ 0.785 SF = 1.57 SF
TRENCH ((9.0 x 2.5) - 1.57) x 0.40 = 8.37 SF
9.94 SF PER LF

REQUIRED TRENCH LENGTH

909 CF ÷ 9.94 SF = 91.5' min. USE 95 LF TRENCH ✓

REQUIRED PIPE SLOPE FOR 10 YR STORM

D.A. = 11,368 SF ÷ 43560 = 0.26 Ac.
I_{10} = 7.10
C = 0.90

Q_{10} = (0.26)(7.10)(0.90) = 1.66 CFS
n = 0.013
12"φ PIPE @ 0.22% min. slope ✓

PRODUCT 205- NEBS Inc., Groton, Mass. 01471. To Order PHONE TOLL FREE 1-800-225-6380

THE DeYOUNG-JOHNSON GROUP, INC.
P.O. Box 197
WILLIAMSBURG, VIRGINIA 23187
(804) 253-0673

JOB #1900210 OWENS - BROCKWAY
SHEET NO. ____ OF ____
CALCULATED BY PENZI DATE 3/27/90
CHECKED BY ____ DATE ____
SCALE ____

SITE IMPROVEMENT (B) PICNIC SHELTER

AREA PROPOSED ADDITION 43.75' x 56.00' = 2450 SF TOTAL

REQUIRED VOLUME FOR BMP INFILTRATION TRENCHES @ 1" RUNOFF

2450 SF x 0.08' = 196 CF TOTAL 2 TRENCHES @ 98 CF EACH

TRENCH DESIGN - CAPTURE 1" RUNOFF FROM PROPOSED SHELTER

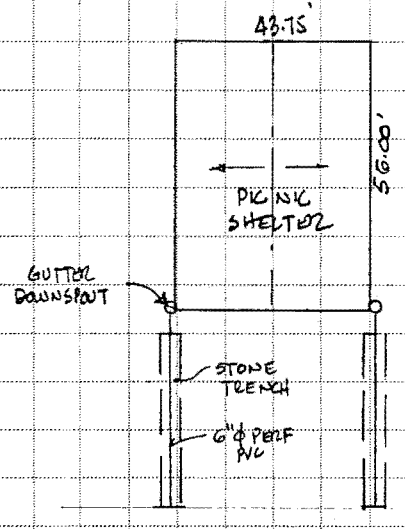

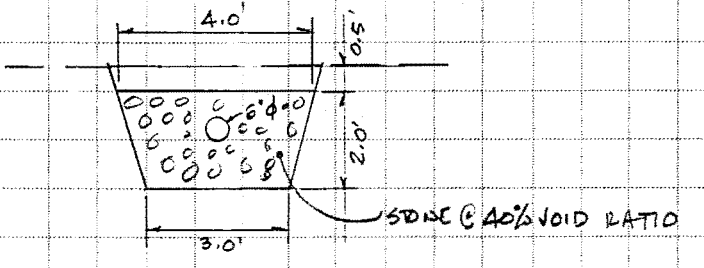

STORAGE PER FOOT OF TRENCH

6"ϕ PIPE 0.20 SF

TRENCH ((3.5 x 2.0) - 0.20) x 0.40 = 2.72 SF

2.92 SF PER L.F

REQUIRED TRENCH LENGTH

98 CF ÷ 2.92 SF = 33.6' min. USE 35 LF TRENCH ✓

PRODUCT 205-1 NEBS Inc., Groton, Mass. 01471. To Order PHONE TOLL FREE 1-800-225-6380

THE DeYOUNG-JOHNSON GROUP, INC.
P.O. Box 197
WILLIAMSBURG, VIRGINIA 23187
(804) 253-0673

JOB 1900210 OWENS - DRIVEWAY
SHEET NO. ____ OF ____
CALCULATED BY PENZI DATE 3/27/90
CHECKED BY ____ DATE ____
SCALE ____

SITE IMPROVEMET (C) - PARKING AREA DRIVEWAY EXTENSION

AREA PROPOSED DRIVEWAY

24' x 40' = 960 SF
22' x 213' = 4686 SF
radius fillets = 269 SF
TOTAL = 5915 SF

REQUIRED VOLUME FOR PMP INFILTRATION TRENCH @ 1" RUNOFF

5915 SF x 0.08' = 473 CF TOTAL

TRENCH DESIGN - CAPTURE 1" RUNOFF FROM PAVED AREA

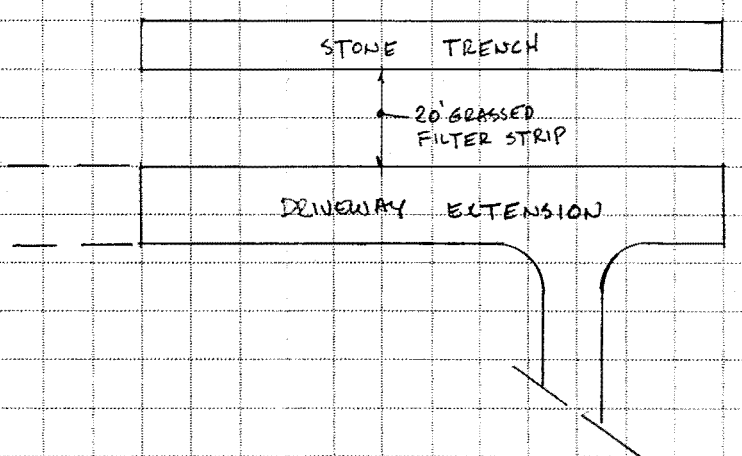

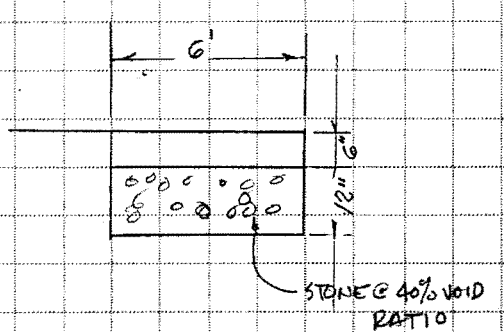

STORAGE PER FOOT OF TRENCH

6' x 1' x 0.40 = 2.4 SF

REQUIRED TRENCH LENGTH

473 CF ÷ 2.4 SF = 197 LF min.

USE 213 LF

PRODUCT 205-1 NEBS Inc. Groton, Mass. 01471. To Order PHONE TOLL FREE 1-800-225-6380

APPENDIX B

SOIL CONSERVATION SERVICE MODIFIED RATIONAL METHOD
OWENS-ILLINOIS SITE IMPROVEMENTS

DESIGN STORM FOR ANALYSIS = 2 YEAR
DRAINAGE AREA (ACRES) = .303
TIME OF CONCENTRATION - UNDEVELOPED (MIN.) = 5
TIME OF CONCENTRATION - DEVELOPED (MIN.) = 5
RUNOFF COEFFICIENT - UNDEVELOPED = .2
RUNOFF COEFFICIENT - DEVELOPED = .9

COMPUTATION RESULTS
REQUIRED STORAGE VOLUME FOR INFILTRATION DESIGN = 993 CUBIC FEET
CRITICAL STORM LENGTH = 39 MINUTES
INFILTRATION DRAWDOWN = 3 DAY AVERAGE

6/21/90

VISTA DEVELOPMENT - OWENS ILLINOIS

DETENTION BASIN DESIGN - IMPROVE EFFECTIVENESS

1. INCREASE DETENTION TIME FROM 24 hrs to 40 hrs -

   $22{,}094\ ft^3 / 40 hrs = .15\ cfs$

2. INCLUDE A WETLAND IN BOTTOM OF BASIN

   $Vol_b = \left(\frac{R_m R_v}{12}\right)(A) = 22{,}094\ ft^3 = .51\ ac\ ft$

   Area of basin = $33{,}000\ ft^2$

   ∴ if bottom is lowered to achieve an avg of at least 8" depth - volume is available.

3. Annual Nutrient Loads I = 58%

   $N = \left[(P)(P_j)\left(\frac{R_v}{12}\right)\right](C)(A)\ 2.72$ $R_v = (0.05 + .009(I) = .57$

   $(44)(.9)\left(\frac{.57}{12}\right)(2.00)(11)\ 2.72 = 112$ lbs

   $P = 44\ (.9)\left(\frac{.57}{12}\right)(0.26)(11)\ 2.72$ 14.6 lbs

4. Avg Annual Loading / ac of wetland

   $\frac{112}{.75} = 148$ lbs/ac/yr

   $\frac{14.6}{.75} = 19.3$ lbs/ac/yr

   - Limits 225 N & 45 lb Phos - ∴ OK

5. RCN = 86 8000 CF - .2 over whole site

   1" Rainfall - 4600 CF

   results in 0.2" runoff

   1.2 - 0.3"

   1.1 0.25"

   → 70% of rainfall volume - 65% phos red $(1.1).85 + .15(3.3) = 1.4$ lbs

   → 85% of runoff volume - 99% sed red. $(85)(.85) + (850)(.15) = 200$ lb

   75% red. by basin - $13.2 \times .25 = 3.3 \times .35 = 1.1$ lbs

   Sed - $3400 \times .25 = 850 \times .1 = 85$ lbs

VISTA DEVELOPMENT

1. SITE - 11 ac

2. Imp Area = 6.34 ac

3. Outfall trench 135' x 5'

4. Runoff Volume

$.2'' \times \frac{1'}{12''} \times 43{,}560 \frac{ft^2}{ac} \times 11\ ac = 7986\ ft^3$ -

" " 6.34 ac 4603 ft^3

5. $\frac{4603}{.4} = 11{,}507$

135 x 5 x 17

6. .1" runoff = 2302 ft^3

= 8.5' x 135' x 5'

7. .07" runoff - site - 2795 ft^3

5' x 10' x 135'

60% of storms ≈ ½" rainfall

70% Volume ≈ .6" rainfall ⟹ 90%

8. Volume = .05" ⇒ 1997 ft^3 5 x 135 x 7.4'

Trench - 6' deep in addition to outfall riprap

Runoff Volume - 67%

1.1 x (.70) + (.30)(3.3) = ~~1.09~~ 1.76 lbs - 60

8.5 (.70) + 850 (.30) = 261 lbs - 20% inc

THE DeYOUNG-JOHNSON GROUP, INC.
P.O. Box 3505
WILLIAMSBURG, VIRGINIA 23187
(804) 253-0673

JOB #1900871 VISTA DEVELOPMENT INC.
SHEET NO. 1 OF
CALCULATED BY L. PENDI DATE 5/26/90
CHECKED BY DATE
SCALE

STORM DRAINAGE DESIGN

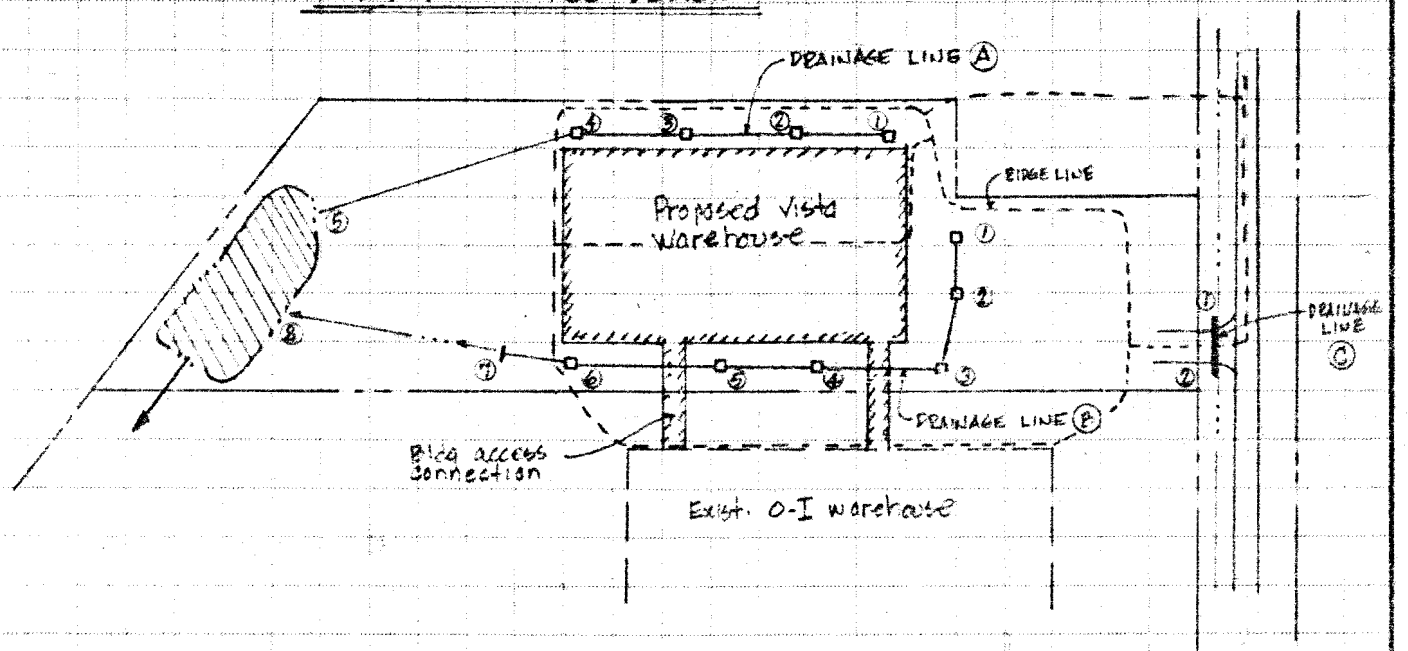

DESIGN CRITERIA

- Size inlets & storm pipe for 10 yr. storm
- Use Rational Method $Q_{10} = CIA$

Runoff Coefficient "C" average for each drainage line area

Line (A): 2.95 Ac. total — 2.55 Ac @ C=0.90, 0.40 Ac @ C=0.20 } Avg C=0.81

Line (B): 4.45 Ac. total — 3.60 Ac @ C=0.90, 0.85 Ac @ C=0.20 } Avg C=0.77

Line (C): 1.20 Ac. total — 0.45 Ac @ C=0.80, 0.75 Ac @ C=0.25 } Avg C=0.45

PRODUCT TYPE 1 ALVERSE Type Center Mass 01101 To Order PHONE TOLL-FREE 1-800-225-6380

Calculated By: L. PENCI Date: 5/26/90
Checked By: Date:
n= 0.013 RCP PIPE 0.035 RIP RAP DITCH
Storm Frequency 10 YEAR

P.O. Box 3505
Williamsburg, Virginia 23187

Project No.: 1900371
Project Desc. VISTA DEVELOPMENT INC
SITE PLAN WAREHOUSE FACILITY
Sheet 2 of Sheets

STORM DRAINAGE COMPUTATION SHEET

LOCATION				RUN-OFF										PIPE - CHANNEL DESIGN						HYDRAULIC GRADE LINE								
				AREA-ACRES					TIME OF FLOW - MIN.																			
LINE	RUN	FROM	TO	INCREMENT	TOTAL	RUN-OFF COEFF.	INCREMENTAL CA	ACCUMULATED CA	TO INLET/ UPPER REACH	WITHIN REACH CONVEYANCE	TIME OF CONCENTRATION	INTENSITY	DISCHARGE C.F.S.	PIPE SIZE	CHANNEL SECTION	SLOPE FT./FT.	CAPACITY FULL C.F.S.	VELOCITY FULL F.P.S.	DESIGN VELOCITY F.P.S.	CONVEYANCE LENGTH FT.	INVERT UPSTREAM	INVERT DOWNSTREAM	FRICTION SLOPE FT./FT.	VELOCITY F.P.S.	$V^2/2G$ FT.	H.G.L. ELEV. UPSTREAM	H.G.L. ELEV. DOWNSTREAM	COVER ELEV. TOP OF BANK
A		1	2	0.90	0.90	0.81	0.73	0.73	5.0	0.9	5.0	7.10	5.18	18"		0.0028	5.56	3.14	2.93	160	103.00	102.55	0.0024	2.93				106.00
		2	3	1.00	1.90	"	0.81	1.54		1.0	5.9	6.92	10.66	24"		0.0024	11.07	3.53	3.39	200	102.05	101.57	0.0022	3.39				105.50
		3	4	0.85	2.75	"	0.69	2.23		0.7	6.9	6.72	14.99	24"		0.0048	15.66	4.99	4.77	200	101.57	100.61	0.0044	4.77				105.00
	✓	4	5	0.20	2.95	"	0.16	2.39			7.6	6.62	15.82	24"		0.0050	15.98	5.09	5.04	180	99.40	98.50	0.0049	5.04				104.00
B		1	2	0.60	0.60	0.77	0.46	0.46	7.5	0.6	7.5	6.60	3.04	15"		0.0024	3.16	2.57	2.47	90	101.00	100.78	0.0022	2.47				103.50
		2	3	0.50	1.10	"	0.39	0.85		0.6	8.1	6.47	5.50	18"		0.0028	5.56	3.14	3.11	105	100.53	100.24	0.0027	3.11				103.50
		3	4	0.80	1.90	"	0.62	1.47		0.9	8.7	6.33	9.31	24"		0.0020	10.11	3.22	2.97	155	99.74	99.43	0.0019	2.97				103.50
		4	5	1.05	2.95	"	0.81	2.28		0.8	9.6	6.10	13.91	30"		0.0020	18.35	3.73	2.83	200	98.93	98.53	0.0012	2.83				104.50
		5	6	1.40	4.35	"	1.08	3.36		1.2	10.4	5.93	19.92	30"		0.0024	20.09	4.09	4.06	285	98.53	97.85	0.0024	4.06				104.50
		6	7	0.10	4.45	"	0.08	3.44		0.2	11.6	5.73	19.11 Use 19.92	30"		0.0024	20.09	4.09	4.06	60	97.85	97.71	0.0024	4.06				103.70
	✓	7	8	0.40	4.85	0.32	0.13	3.57		1.5	13.3	5.44	19.42 Use 19.92	—	DITCH b=2' d=1.33'	0.0050	19.92	2.51	2.51	195	97.71	96.73						
C	✓	1	2	1.20	1.20	0.45	0.54	0.54	13.0	2.0	15.0	5.10	2.75	18"		0.0046	7.12	4.02	3.74	72	100.43	100.10	0.0007	1.55				

SOLUTION FOR A TRAPEZOIDAL CHANNEL

LINE B OUTFALL DITCH

DISCHARGE	19.92 CFS	BASE WIDTH	2.0
VELOCITY	2.51 FPS	SIDE SLOPE	3.0
NORMAL DEPTH	1.33 FEET	AREA	7.9
BOTTOM SLOPE	0.00500	TOP WIDTH	9.9
MANNING'S N	0.0350		
CRITICAL DEPTH	0.94 FEET	VELOCITY HEAD	0.1
FROUDE NUMBER	0.50	P + M	35
CRITICAL SLOPE	0.02235		

THE DeYOUNG-JOHNSON GROUP, INC.
P.O. Box 197
WILLIAMSBURG, VIRGINIA 23187
(804) 253-0673

JOB 1900371
SHEET NO. 2 OF
CALCULATED BY L. Penci DATE 5/23/90
CHECKED BY Revised 8/6/90 DATE
SCALE

BASIN STORAGE VOLUME

Contour	Area (S.F.)	$\Sigma(A_i+A_j)/2$	Volume (CF)	Σ Volume (CF)
95	0	0	0	0
96	16,270	8135	8135	8135
97	33,000	24,635	24,635	32,770
98	34,500	33,750	33,750	66,520
99	36,000	35,250	35,250	101,770

Storage Algorithm: $z_1 = 1'$ $z_2 = 3'$

$S_1 = 8135$ $S_2 = 66,520$

$$b = \frac{\ln\left(\frac{S_2}{S_1}\right)}{\ln\left(\frac{z_2}{z_1}\right)} = 1.9127 \qquad S = 8135\left(z^{1.9127}\right)$$

$$K_1 = \frac{S_2}{z_2^{\,b}} = 8135 \qquad z = \left(\frac{S}{8135}\right)^{\frac{1}{1.9127}}$$

SPILLWAY SECTIONS

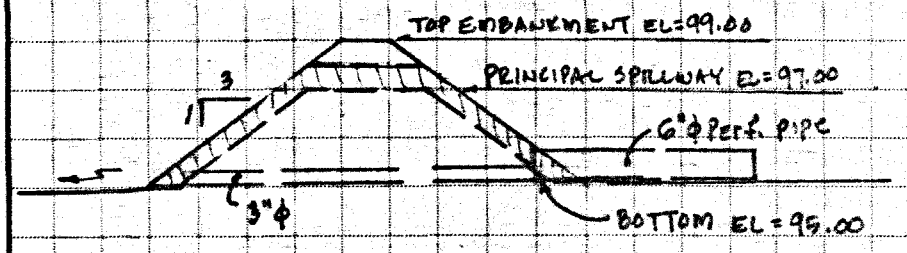

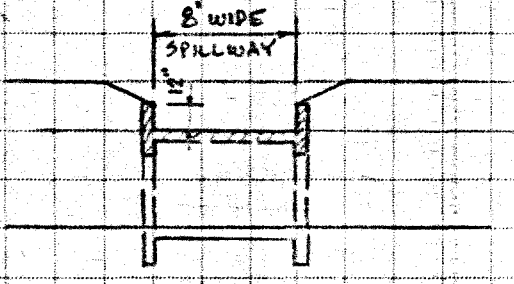

DETENTION RELEASE RATE

Req'd ~~30~~ 40 hr. min. for 1" Runoff from impervious area

6.34 acres @ 1" = 22,094 CF

Release rate = 22,094 CF ÷ ~~30~~ 40 hrs = ~~736~~ 552 CF/hr

552 ~~736~~ ÷ 3600 = ~~0.21~~ 0.15 CFS Release Rate

Elevation for 1" volume

$$z = \left(\frac{22,094}{8135}\right)^{\frac{1}{1.9127}} = 1.69' \qquad \text{Elev} = 96.69$$

Release Pipe = ~~3"~~ 2" diameter

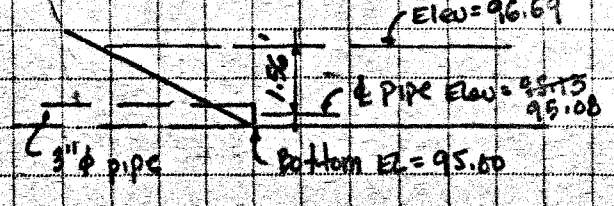

Avg. Head on ~~3"~~ 2" pipe = ~~0.73'~~ 0.81'

$$Q = Ca\sqrt{2gh} \qquad C = 0.60$$

$Q_{all} = ~~0.21~~$ 0.09 CFS (OK) $\qquad a = ~~0.0491~~$ 0.0218

$h = 0.78$

Use 3"ϕ discharge pipe ✓ 8/6/90

PRODUCT 88-1, ALBERT Inc., Groton, Mass. 01471. To Order PHONE TOLL FREE 1-800-225-6380

THE DeYOUNG-JOHNSON GROUP, INC.
P.O. Box 3505
WILLIAMSBURG, VIRGINIA 23187
(804) 253-0673

JOB #1900371
SHEET NO. ____ OF ____
CALCULATED BY PENI DATE 5/6/90
CHECKED BY ____ DATE ____
SCALE ____

DETENTION BASIN OUTFALL INFILTRATION TRENCH

Required Volume = 2000 CF (Per J.C.Co.)

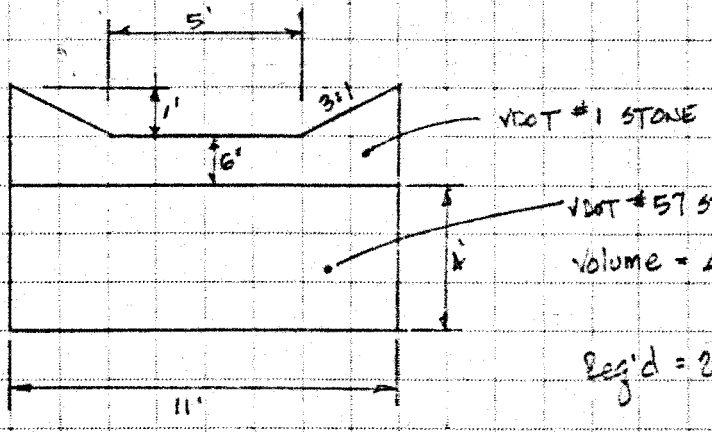

Volume = 4'x11'x0.40 = 17.6 CF/LF

Req'd = 2000 CF ÷ 17.6 = 114 LF

USE 115 LF TRENCH

Rickmond Engineering, Inc.
1643 C Merrimac Trail
Williamsburg, Virginia 23185-5624

Civil • Environmental
Consultants • Engineers • Surveyors
(804) 229-1776 • (804) 898-4149
Fax No. (804) 220-9370

May 21, 1990

Rickmond

Mr. Louis Penci, CLS
The DeYoung-Johnson Group, Inc.
P. O. Box 197
Williamsburg, VA 23187

RE: Soils Work at Owens-Illinois Plant
Toano, Virginia
Job Number 90180

Dear Lou:

We have completed the soils work you requested of us on the referenced job. The soils on the north and east sides of the plant property were very light friable loamy sand and sand loam down to at least 36" below the surface. The last two holes, Numbers 5 & 6 that I put in were more clayey and plastic and had much slower perc rates.

I gave my drawing with the hole numberings and locations to your surveyors who were working out there. They said they would accurately locate the holes on the site plan.

The rates for the holes again were:

No. 1	20 MPI	Loamy Sand 24"
No. 2	35 MPI	Sandy Clay Loam 36"
No. 3	20 MPI	Loamy Sand
No. 4	15-20 MPI	Sand Possibly Fill 36"
No. 5	65 MPI	Sandy Clay Loam 36"
No. 6	55 MPI	Sandy Clay Loam 36"

If we can be of further help to you, please don't hesitate to call on us.

Thanks for giving us a chance to help you.

Sincerely,

Doug Redman
Project Engineer

Mailing Address:
P.O. Box JC
Williamsburg, Va.
23187-3627

JAMES CITY COUNTY

DEPARTMENT OF DEVELOPMENT MANAGEMENT
COUNTY GOVERNMENT CENTER, 101 MOUNTS BAY ROAD

Development Manager
(804) 253-6671
Code Compliance
253-6626
County Engineer
253-6678
Planning
253-6685

July 15, 1991

Ms. Suzanne R. Bartow
Aetna Casualty & Surety Company
Piston Cavanaugh, Inc.
P. O. Box 2167
Toledo, OH 43603

RE: Owens-Illinois - Paved Surface Improvements

Dear Ms. Bartow:

The purpose of this letter is authorize release of the $26,000 Erosion and Sedimentation Control Bond No. 02 S 100017398 BCA 296 posted to guarantee installation of erosion and sediment control measures for the above referenced project. All disturbed areas have been satisfactorily stabilized in accordance with the Siltation Agreement and the approved plans.

Sincerely,

Darryl E Cook

Darryl E. Cook
Development Engineer

cc: Owens-Brockway Glass Container, Inc.

Mailing Address:
P.O. Box JC
Williamsburg, Va.
23187-3627

JAMES CITY COUNTY

DEPARTMENT OF DEVELOPMENT MANAGEMENT

COUNTY GOVERNMENT CENTER, 101 MOUNTS BAY ROAD

Development Manager
(804) 253-6671
Code Compliance
253-6626
County Engineer
253-6678
Planning
253-6685

January 24, 1991

Owens-Brockway Glass Container, Inc.
150 Industrial Boulevard
Toano, VA 23168

RE: Paved Surface Improvements

Dear Mr. Lemieux:

Your Erosion Control Plan and Land Disturbing Permit for the above-referenced project expires on February 28, 1991. As construction is not yet complete and all disturbed areas are not stabilized, it will be necessary to extend the plan and permit. Because your existing plan is adequate, submission of an updated Erosion Control Plan is not required.

Please sign the attached permit where indicated and return to this office. This application for a renewed permit and plan must be received by February 21, 1991. Otherwise, the Erosion Control Plan becomes void, and the Land Disturbing Permit will be revoked. If the plan becomes void, no further land disturbing activities will be allowed and no further permits will be issued by the County until the plan is reapproved.

Please call me if you have any questions.

Sincerely,

Jean Scott

Jean Scott
Management Assistant

JS/dlh
0365C
5050c

Attachment

FILE-
VISTA WAREHOUSE

JACK L. MASSIE
CONTRACTOR, INC.

Road & Site Construction
Since 1947
3900 Cokes Lane
Williamsburg, VA 23188
(804) 566-8643
FAX (804) 566-8566

RECEIVED 1-25-91

January 22, 1991

Mr. Gerald Lewis
James City Code and Compliance
101-E Mounts Bay Road
Williamsburg, VA 23185

Dear Mr. Lewis:

Regarding Inspection Reports - Erosion and Sediment Control for Burnt Ordinary, Phase III, and Vista Warehouse, which were dated January 18, 1991, JLMCI requests that these reports be directed to project general contractor or bond holder, and not to this office.

This request is being made in order that design improvements or activity sequencing can be improved/changed to facilitate your requirements that may not be identified in the contract plans.

I have taken the liberty of forwarding above referenced reports to permitees in order that they may evaluate corrective measures required.

Sincerely,

JACK L. MASSIE CONTRACTOR, INC.

James A. Vaughn (LS)

James A. Vaughn
Asst. Project Manager/Scheduler

JAV/lg

cc: Mr. Darrell Cooke ✓

MEMORANDUM

Date: June 28, 1990

To: Pat Friel, Planner

From: Darryl E. Cook, Engineer DEC

Subject: Runoff Analysis for Vista Development Warehouse

In accordance with Section 20-534 of the James City County Zoning Ordinance, a runoff analysis has been submitted and reviewed for the above referenced project. The following comments are submitted for inclusion in the Planning Director's Report.

1. Impact of proposed project on the Water Supply Reservoir.

   The proposed project is located on an 11 acre parcel currently owned by Owens-Illinois on the south side of Industrial Boulevard in the Hankins Industrial Park in Toano. The site is to be transferred to Vista Development for the construction of a warehouse to store glass products manufactured by the adjacent Owens-Illinois facility. The property is within the Reservoir Protection Overlay District and is currently zoned M-2. The project involves the construction of a 210,000 square foot warehouse, paved access driveways, trailer storage areas, and other minor site improvements. The overall increase in impervious area resulting from these improvements is 275,965 square feet or 6.35 acres.

   The uncontrolled pollutant loadings generated by this project are estimated to be 3400 pounds of sediment and 13.2 pounds of phosphorus per year. After construction with the proposed runoff controls in place, sediment loads will be reduced to 850 pounds and phosphorus loads will be reduced to 3.3 pounds. However, although the proposed runoff control measures reduce pollutant loadings by 75% thereby meeting the RPOD requirements, these levels are four and three times the predevelopment levels for sediment and phosphorus, respectively. Therefore, the runoff from the project as designed will have a greater negative impact on the water quality of the proposed reservoir than the existing condition.

2. Adequacy of performance criteria specified in the study, including ability to monitor.

   The project, with the proposed detention basin for runoff control, meets the runoff analysis criteria as specified in Section 20-534 of the James City County Zoning Ordinance. The developer is required to execute an inspection and maintenance agreement with the Director of Code Compliance. Such an

agreement is to provide for periodic inspection and maintenance of the runoff control facility, and to grant authority for the Director to require further repairs or alterations as necessary to ensure the control measures meet the stated performance criteria.

3. Recommendations for additional control measures if required, including monitoring.

   The project with the proposed detention basin meets the minimum requirements of the RPOD. However, the pollutant loads from the project will exceed the predevelopment loads by three to four times. Therefore, enhancements to the detention basin are needed to increase its effectiveness. First, a wetland shall be established in the bottom of the basin. Second, an infiltration trench shall be placed at the end of the outfall pipe to control the discharge from the majority (90 percent) of the storms leaving the basin. Third, the detention time of the runoff in the basin shall be increased to 40 hours.

   While it is difficult to accurately determine the pollutant reductions achieved by these modifications, the best estimates indicate that sediment will be reduced to 20 percent or 40 pounds above predevelopment levels while phosphorus loads will be 60 percent or 0.65 pounds above existing levels.

4. Final recommendations regarding project.

   It is recommended that the permit be granted subject to the following conditions.

RECOMMENDATIONS

1. An Inspection/Maintenance Agreement as approved by the County Attorney shall be executed prior to final site plan approval.

2. A soils test shall be provided for the infiltration trench to the Division of Code Compliance prior to final site plan approval to verify suitability of the soils for use with infiltration trenches.

3. The dry detention basin will be modified by creating a wetland marsh in the bottom of the entire basin, by increasing the detention time to 40 hours for the 1 inch volume of runoff from impervious areas, and by installing an infiltration trench at the outfall of the basin capable of infiltrating 0.05 inches of runoff from the site or 2000 cubic feet.

DEVELOPMENT MANAGEMENT

101-E MOUNTS BAY ROAD, P.O. BOX 8784, WILLIAMSBURG, VIRGINIA 23187-8784
(757) 253-6671 Fax: (757) 253-6850 E-MAIL: devtman@james-city.va.us

CODE COMPLIANCE
(757) 253-6626
codecomp@james-city.va.us

ENVIRONMENTAL DIVISION
(757) 253-6670
environ@james-city.va.us

PLANNING
(757) 253-6685
planning@james-city.va.us

COUNTY ENGINEER
(757) 253-6678

INTEGRATED PEST MANAGEMENT
(757) 253-2620

October 31, 2001

NOV 2001
RECEIVED
ENVIRONMENTAL DIVISION

Porter Realty Company, Inc.
P.O. Box 6482, 1804 Dabney Road
Richmond, Virginia 23230

Attn: Mr. Richard W. Porter
Ref.: Owens-Brockway Visit 10/16/01
Warehouse

Dear Mr. Porter:

Pursuant to your site visit with Keith Taylor, Sandra Barner and Doug Murrow last week at the Owens-Brockway Warehouse, members of the Development Management Staff have researched several questions that were generated during this visit. This visit and the nature of the questions relate to the possibility of Owens-Brockway giving up the lease on this 212,400 square foot warehouse space. As noted during the visit, this warehouse was built on a separate parcel and is connected to the Owens-Brockway main plant by two enclosed access-ways. The following are responses to these questions:

Fire Prevention

1. Is fire pressure adequate for the warehouse as a stand-alone facility?

   If the building is sold/leased, and the fire protection system (private fire service main connected to the current fire pump) remains undisturbed to the remainder of that system, the pressures would be adequate. If the building is sold/leased and the corresponding fire protection system is disconnected to the original system, then the owner/designer will need to evaluate it. This will require hydraulically recalculating the system to determine if the county can provide adequate pressure. Another factor for the owner/designer to consider is if the fire sprinkler density requirements have changed due to storage of different commodities or new processes.

2. The building currently has a drop-head, dry pipe fire suppression system.

   This type of system may remain, but will require a re-evaluation if the use of the structure changes or if the current arrangement of storage is modified.

3. The building currently has a paved fire lane along south and west sides. Paved open space is also on the north side where the loading dock is located.

This building is classified as an unlimited area structure. A minimum 30 foot clear space is required around the perimeter, with an 18 foot fire lane.

4. If the use of the building remains the same but becomes a single occupant warehouse/distributer, what physical improvements would be required?

After further review, the two connecting access ways will be required to be removed to provide fire department access around the newly identified individual unlimited area structures. The building faces of both structures are less than the required 30 feet to the property line. A 3 hour firewall from the foundation to the roof structure above will be required to be constructed at each of the buildings parallel faces which are property line.

5. If the use of the building changes to something other than a single occupant warehouse/distributor, such as adding a manufacturing component or dividing the space into multi-tenants, what physical improvements would be required?

Fire separation walls may be required to be added within the structure. The current code may cause these improvements to be made if multiple tenants with differing uses are introduced. These improvements would be analyzed on a case by case basis.

6. There is presently one exit door on each side of the building. Would any more potentially be required under other scenarios like manufacturing or multi-tenant?

210,000 s.f. would allow a maximum of 700 workers for a Storage Use. The current Certificate of Occupancy does not allow this large of occupant load. Any increases in occupant load by a new tenant would require a new Certificate of Occupancy, and a re-evaluation of the number of required exits.

Restrooms

1. There is presently one men's and one women's restroom adjacent to the office. Would additional restrooms be required for any reason?

The current number of toilet fixtures for a Storage Use, would allow a maximum occupant load of 200. One water fountain is required, and one janitors mop sink is required.

Parking

1. Owens-Brockway will not want employees of a separate user parking on O-B property. Will provisions for parking on site or across the street be required?

> Yes, the whole subdivision approval was conditioned around the provision of shared parking and cross easements. In lieu of sharing, they must provide on-site the required number of spaces as determined by the James City County parking regulations.

2. Can parking be gravel, or is it required to be paved?

> Parking may be gravel, but it must meet all parking geometry and landscape requirements. The standard is likely to be 6-8 inches of compacted stone.

3. Does the site size allow for additional parking in relation to the Chesapeake Bay regulations and parking configuration standards? There is gravel on the north side of the building, from the property line in the between the two access-ways to the main Owens-Brockway plant. This area may make a good head-in parking area if the access-ways were torn down and a driveway added.

> There is limited area to expand. 60% impervious surface is the maximum coverage, and the site is currently at 57.6% This translates to about 11,500 square of additional area that could be used for parking. However, the use would need to be clearly established to determine the required number of spaces, and a conceptual drawing will be required to be submitted for review.

4. The realtor has had preliminary discussion with a property owner across the street about the possibility of acquiring enough land for a parking lot, if parking can not be accommodated on site.

> Off site parking requires approval from the DRC board and legal provisions established for permanent availability.

Vehicle Ingress and Egress

Truck ingress and egress will be via an existing independent driveway opening onto Hankins Industrial Blvd, not through O-B's property, as is presently being done. Depending on whether employee parking can be added on site, an additional point of ingress and egress just north of the JCSA property would be preferable to mixing the employee traffic with the truck traffic. Would an additional curb cut be allowed?

> Probably, with approval from the DRC board and VDOT.

Erosion and Sediment Control

1. Would adding parking on site affect the existing storm water detention pond?

Yes, new paving created by additional parking or other impervious cover would affect the existing pond as additional runoff.

2. Does the existing detention pond have any excess capacity?

No, it was designed for the currently approved site plan improvements exclusively.

3. Does it have the potential to be upgraded if needed?

This is difficult to determine without detailed calculations. Given the limited amount of potential new impervious area that could be created, it may be possible to modify the existing basin to accommodate additional impervious parking.

4. As in question 3 re: Parking above, can the site meet acceptable Chesapeake Bay open space requirements if parking is added on site somewhere?

As stated above, 11,500 square feet of parking could be added and still meet Chesapeake Bay requirements.

If you require clarification on any of these comments please do not hesitate to contact me.

Sincerely,

John T.P. Horne

John T.P. Horne
Development Manager

cc: Keith Taylor
George Connally
Doug Murrow
Allen Murphy
Darryl Cook
Joe Davis

May 31, 1990

Mr. Michael A. Freda
Department of Development Management
101E Mounts Bay Road
Williamsburg, Va 23185

RECEIVED
PLANNING DEPARTMENT
JUN 1990

Re: Case No. SP-29-90
Owens-Illinois
DJG Job No: 1900210

Dear Mr. Freda:

Submitted herewith are ten (10) sets of revised site plans for final approval. The review comments contained in you May 11, 1990 conditional approval letter are responded to as follows:

Planning Division:

1. The height of all structure additions are noted on the plans.

Division of Code Compliance:

1. The Owner shall obtain the Inspection/Maintenance Agreement.

2. The required soil test information is contained in the attached letter report. The boring locations and soil logs are shown on the cover plan sheet.

3. Pretreatment facilities have been added to the plans for each of the three infiltration trenches.

4. Observation well locations and details added to the plans.

5. Requested note added to plans.

6. The Owner will obtain the Land Disturbing Permit and Siltation Agreement.

7. As-built drawings for the infiltration trenches shall be provided upon completion.

8. The requested preconstruction conference will be attended.

9. Trench section dimensions revised as requested.

10. Washed stone specified on the plans.

Please advise if we can provide any further information to expedite final approval of this project.

Sincerely,

Louis M. Penci

Louis M. Penci, C.L.S.
Principal

LMP:fd

Enclosure

cc: Owens-Illinois

TRANSMITTAL

DATE: August 6, 1990

TO: CODE COMPLIANCE, Darryl Cook

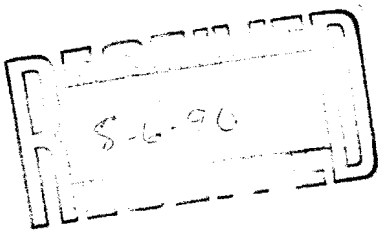

FROM: Mike Freda, Planner

SUBJECT: SP-53-90. Owens Illinois Paved Surface Improvements

ITEMS ATTACHED: Revised site plan

INSTRUCTIONS: Please initial if approved

RETURN REQUIRED BY: August 10, 1990

AGENCY'S COMMENTS:

Plan is acceptable, however, an Inspection/Maintenance Agreement must be executed with the County prior to final site plan approval.

DEC 8/7/90

OK - 8/9/90 DEC

Mailing Address:
P.O. Box JC
Williamsburg, Va.
23187-3627

JAMES CITY COUNTY

DEPARTMENT OF DEVELOPMENT MANAGEMENT

COUNTY GOVERNMENT CENTER, 101 MOUNTS BAY ROAD

Development Manager
(804) 253-6671
Code Compliance
253-6626
County Engineer
253-6678
Planning
253-6685

November 16, 1990

Owens-Illinois Glass Container, Inc.
150 Industrial Boulevard
Toano, VA 23168

RE: Owens-Illinois Site Improvements

Dear Mr. Lachmiller:

Your Erosion Control Plan and Land Disturbing Permit for the above-referenced project expires on December 31, 1990. As construction is not yet complete and all disturbed areas are not stabilized, it will be necessary to extend the plan and permit. Because your existing plan is adequate, submission of an updated Erosion Control Plan is not required.

Please sign the attached permit where indicated and return to this office. This application for a renewed permit and plan must be received by December 21, 1990. Otherwise, the Erosion Control Plan becomes void, and the Land Disturbing Permit will be revoked. If the plan becomes void, no further land disturbing activities will be allowed and no further permits will be issued by the County until the plan is reapproved.

Please call me if you have any questions.

Sincerely,

Jean Scott

Jean Scott
Management Assistant

JS/dlh
0365C
5016c

Attachment

Mailing Address:
P.O. Box JC
Williamsburg, Va.
23187-3627

JAMES CITY COUNTY

DEPARTMENT OF DEVELOPMENT MANAGEMENT
COUNTY GOVERNMENT CENTER, 101 MOUNTS BAY ROAD

1305 Returned by P.O. Sent to O.S.

Development Manager
(804) 253-6671
Code Compliance
253-6626
County Engineer
253-6678
Planning
253-6685

July 15, 1991

Ms. Pamela A. Brown
Aetna Casualty & Surety Company
136 N. Summit Street
Toledo, OH 43604

RE: Owens-Illinois - Site Improvements

Dear Ms. Brown:

The purpose of this letter is authorize release of the $24,000 Erosion and Sedimentation Control Bond No. 02 S 100017398 BCA 285 posted to guarantee installation of erosion and sediment control measures for the above referenced project. All disturbed areas have been satisfactorily stabilized in accordance with the Siltation Agreement and the approved plans.

Sincerely,

Darryl E. Cook

Darryl E. Cook
Development Engineer

cc: Owens-Illinois, Inc.

OWENS-BROCKWAY
GLASS CONTAINERS
a unit of Owens-Illinois

TOANO PLANT

June 19, 1990

Mr. Bernard M. Farmer
Director of Code Compliance
James City County
P.O. Box JC
Williamsburg, VA 23185

Dear Mr. Farmer:

This letter will serve as notice that Robert E. Lachmiller represents Owens-Brockway Glass Container Inc., and the parent company, Owens-Illinois, Inc., and that he is authorized to sign all James City County documents for the project known as "Owens-Illinois Site Improvements".

Sincerely,

OWENS-BROCKWAY
GLASS CONTAINER INC.

Dennis M. Silvis
Plant Manager

DMS/lla

150 Industrial Boulevard Toano, Virginia 23168 (804) 566-1200

99132_OWENS_ILLINOIS_SITE_IMPROVEMENTS - 086

Glass Recycles

TRANSMITTAL

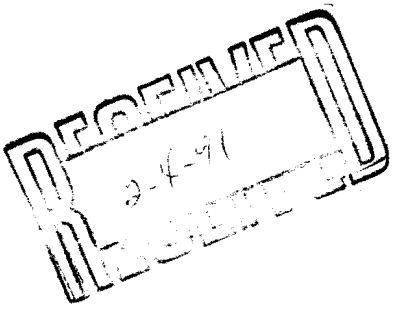

DATE: February 1, 1991

TO:

CODE COMPLIANCE, Darryl Cook
REAL ESTATE ASSESSMENTS
FIRE DEPARTMENT

FROM: Mike Freda, Planner

SUBJECT: Case No. SP-7-91. Owens Illinois Site Improvements (amendment)

ITEMS ATTACHED: site plan

INSTRUCTIONS: Please review and initial if approved. Note: Disregard Jan. 31 site plan submittal. The addition is connected to the existing bath house, not the main building.

RETURN REQUIRED BY: February 11, 1991

AGENCY'S COMMENTS:

Approved 2/5/91 DEC

FILE - OWEN ILLINOIS

JACK L. MASSIE CONTRACTOR, INC.

Road & Site Construction
Since 1947
3900 Cokes Lane
Williamsburg, VA 23185-7010
(804) 566-8643
FAX (804) 566-8566

TELECOPY TRANSMITTAL SHEET

DATE 7/17/90

TO: Darrell Cooke

FROM Jim Vaugh

PHONE: 253 6673

PHONE

TELEFAX # 253 6663

TELEFAX #

COMMENTS: Please review as soon as possible.
— appreciated —
JL

additional note: DJG has authorized use
with your approval
jv

NUMBER OF PAGES 5 INCLUDING TRANSMITTAL SHEET

IF THERE ARE ANY PROBLEMS RECEIVING THIS TRANSMISSION, PLEASE TELEPHONE JACK L. MASSIE CONTRACTOR, INC. AT 804/566-8643.

JACK L. MASSIE
CONTRACTOR, INC.

Road & Site Construction
Since 1947
3900 Cokes Lane
Williamsburg, VA 23185-7010
(804) 566-8643
FAX (804) 566-8566

July 17, 1990

ATTN: Mr. Darrell Cooke
James City Codes & Compliance
P. O. Box JC
Williamsburg, VA 23187

RE: OWENS ILLINOIS
JLMCI JOB #3230

Dear Mr.Cooke:

In following through with our telephone conversation today, please find attached copy of letter dated July 10, 1990 which I sent to DJG Group requesting noted change in storm system at the above referenced project.

Noting advantages to the owner, as well as maintaining the intended erosion control characteristics this structure is to serve, we request you review and approve the use of a precast 60" diameter storm structure.

The single 12" inlet and dual 12" outlet pipe invert elevations will remain as detailed on original approved site plan.

Please sign and return if you find our proposal meets your approval.

Sincerely,

JACK L. MASSIE CONTRACTOR, INC.

James A. Vaughn
Asst. Project Manager/Scheduler

JAV:lg

Enclosure: July 10, 1990 correspondence to DJG Group

Design change approved - with the stipulation that the bottom of the manhole extend at least 6½ feet below the invert of the inlet pipe.

Signature: Darrell E Cooke
Date: 7/23/90

JACK L. MASSIE
CONTRACTOR, INC.

Road & Site Construction
Since 1947
1900 Cokes Lane
Williamsburg, VA 23185-7010
(804) 566-8643
FAX (804) 566-8566

FAXED

July 10, 1990

To Darrell Cooke

Mr. Dan DeYoung
The DeYoung-Johnson Group, Inc.
P. O. Box 197
Williamsburg, VA 23187

RE: OWENS ILLINOIS - SITE IMPROVEMENTS
JLMCI JOB #3230

Dear Mr. DeYoung:

Persuant to our telephone conversation this morning, please find noted below advantages to the owner at the above referenced project if the utilization of a 7' deep x 60" diameter precast structure would be approved:

A.) Precast circular structure has steel reinforced copolymer polypropylene manhole steps (detail attached). The inclusion of these steps facilitates easy access to structure for maintenance purposes, silt removal.

B.) Proposed circular structure would have a standard cast iron manhole frame and cover, 24" opening, in order to allow ample room for access into structure (shop drawing attached). Planned detail drawing allows for only an 18" opening which does not allow easy access.

C.) Proposed 60" diameter structure has 6" thick concrete wall with wire reinforcing. Plan detail does not require reinforcing.

Please consult your designer and the owner to request this no cost change.

If I can be of further assistance, please do not hesitate to call.

Sincerely,

JACK L. MASSIE CONTRACTOR, INC.

James A. Vaughn
Asst. Project Manager/Scheduler

JAV:lg

Enclosures

To Darrell Cooke

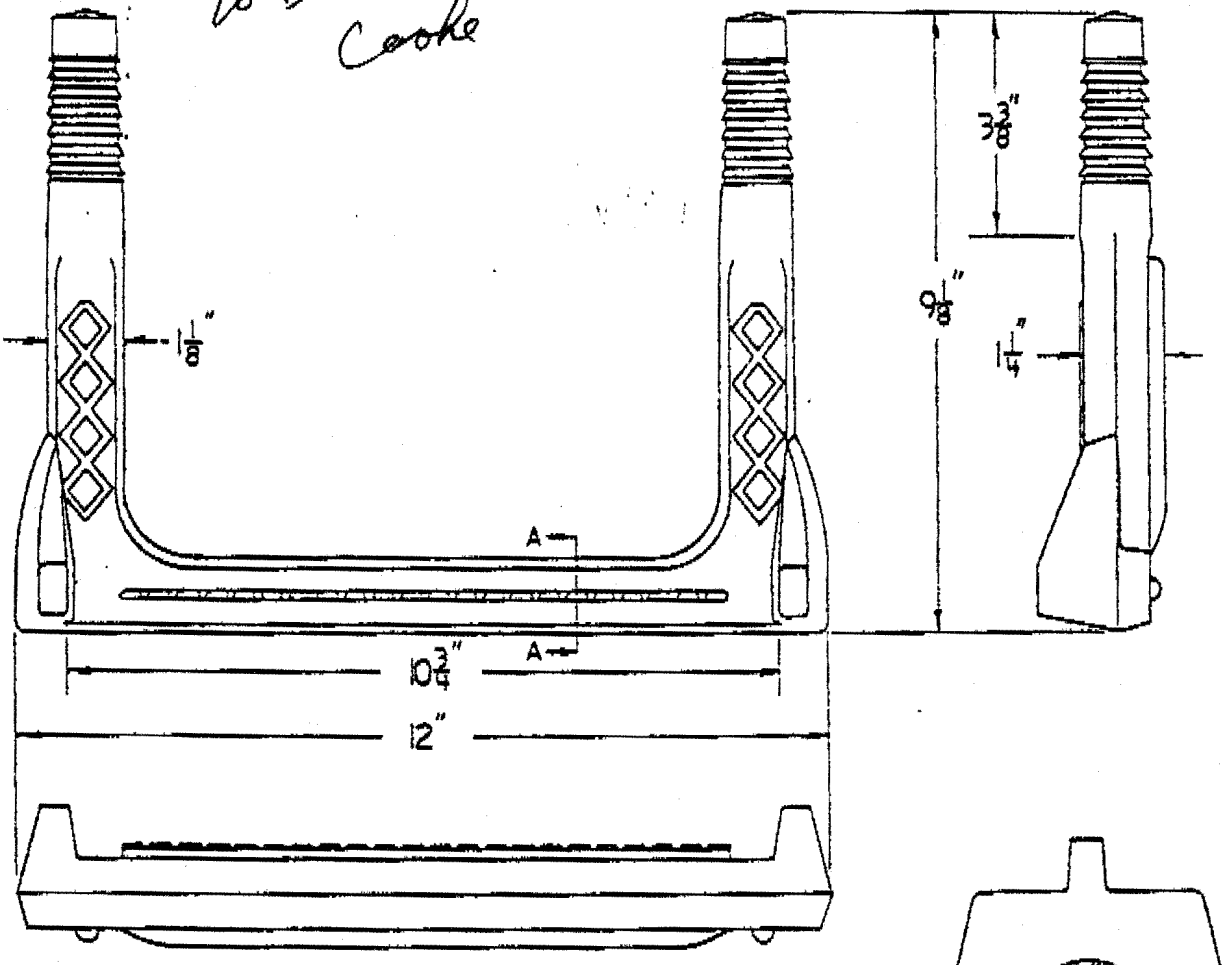

Copolymer Polypropylene Plastic

1/2" GRADE 60 STEEL REINFORCEMENT

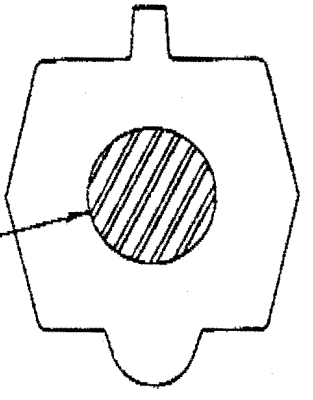

SECTION-A

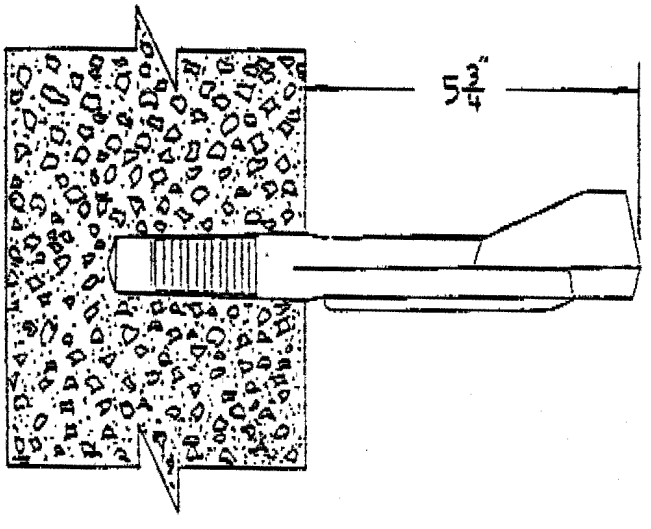

PS1-PF
Manhole Step

M.A. Industries Inc.
kelly & dividend dr.
peachtree city ga.
30269

to Darrell Cooke

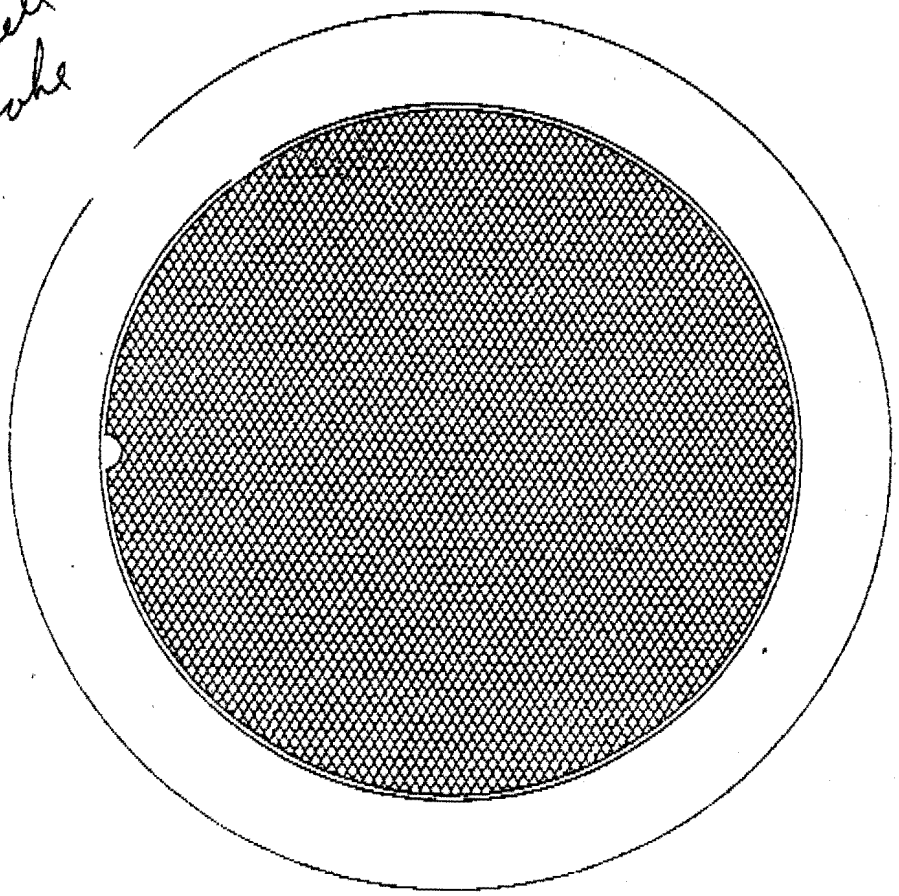

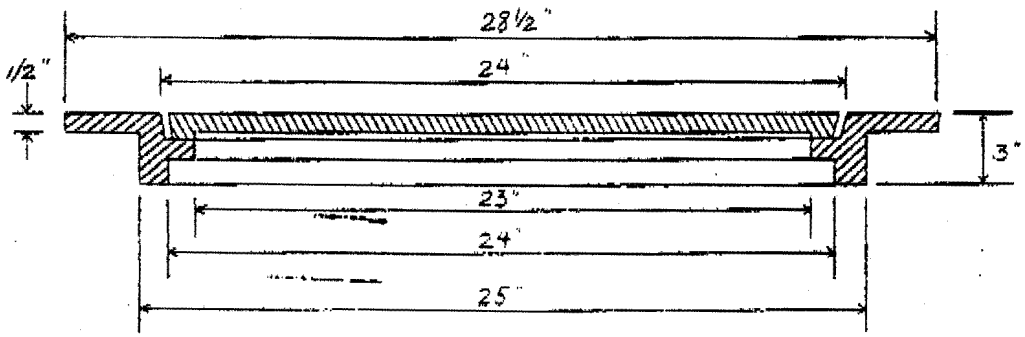

Specify Flange Up Or Down

CASTING DESIGN NO	E 3/4	

WEIGHTS			
FRAME	COVER	GRATE	CURB COVER
72	92		

DEWEY BROS. OF VIRGINIA, INC
BOX 2126, NORFOLK, VIRGINIA PHONE (804) 545-3571

29

Mailing Address:
P.O. Box JC
Williamsburg, Va.
23187-3627

JAMES CITY COUNTY

DEPARTMENT OF DEVELOPMENT MANAGEMENT

COUNTY GOVERNMENT CENTER, 101 MOUNTS BAY ROAD

Development Manager
(804) 253-6671
Code Compliance
253-6626
County Engineer
253-6678
Planning
253-6685

April 26, 1990

Mr. Lou Penci
DeYoung Johnson Group
P.O. Box 197
Williamsburg, VA 23187

RE: Owens-Illinois Site Improvements

Dear Mr. Penci:

James City County's Erosion and Sedimentation Ordinance requires that the Office of Code Compliance respond in writing to applicants submitting Erosion Control Plans within 45 days of receipt of the plan. Therefore, to satisfy this requirement, this is to notify you that the Erosion Control Plan submitted on April 4, 1990 for the above referenced project has been reviewed and disapproved. The attached sheet lists the comments that must be addressed before approval of the plan will be granted.

It is suggested that revisions not be made and the plan resubmitted to the Planning Department until after the preliminary approval letter is received with the list of conditions that must be satisfied prior to final approval.

Please contact me if you have any questions regarding this matter.

Sincerely,

Darryl E Cook

Darryl E. Cook
Engineer

Division of Code Compliance:

1. The Owner shall obtain a Land Disturbing Permit and Siltation Agreement.

2. As-built drawings for the infiltration trenches shall be provided upon completion.

3. Soil test information previously furnished. Additional tests not required per conversations with Darryl Cook.

4. The Owner shall obtain the Inspection/Maintenance Agreement.

Please advise if we can provide any further information to expedite final approval of this project.

Sincerely,

Louis M. Penci

Louis M. Penci, C.L.S.
Principal

LMP:fd

cc: Owens-Illinois
Dan DeYoung
Master File

TO
DARRYL
CC

THE DeYOUNG-JOHNSON GROUP, INC.
P.O. Box 197
WILLIAMSBURG, VIRGINIA 23187

(804) 253-0673

LETTER OF TRANSMITTAL

DATE	JOB NO.
6/14/90	1900210

ATTENTION: DARRYL COOK

RE: OWENS-ILLINOIS & VISTA

TO DEPT. OF DEVELOPMENT MANAGEMENT
CODES COMPLIANCE
JAMES CITY COUNTY

WE ARE SENDING YOU ☒ Attached ☐ Under separate cover via _____ the following items:

☐ Shop drawings ☐ Prints ☐ Plans ☐ Samples ☐ Specifications
☐ Copy of letter ☐ Change order ☐ _____

COPIES	DATE	NO.	DESCRIPTION
2			DESCRIPTION OF VISTA SITE
2			DESCRIPTION OF REMAINING O/I SITE
1			SOIL REPORT LETTER

THESE ARE TRANSMITTED as checked below:

☐ For approval ☐ Approved as submitted ☐ Resubmit _____ copies for approval
☒ For your use ☐ Approved as noted ☐ Submit _____ copies for distribution
☒ As requested ☐ Returned for corrections ☐ Return _____ corrected prints
☐ For review and comment ☐ _____
☐ FOR BIDS DUE _____ 19 _____ ☐ PRINTS RETURNED AFTER LOAN TO US

REMARKS _____

COPY TO _____

SIGNED: Lou Penci

If enclosures are not as noted, kindly notify us at once.

PRODUCED BY ALDEN/NEBS Inc. Stoughton, Mass. 02072

THE DeYOUNG-JOHNSON GROUP, INC.
P.O. Box 3505 1006 Richmond Rd.
WILLIAMSBURG, VIRGINIA 23187

(804) 253-0673 or 874-5015
FAX (804) 253-2319

LETTER OF TRANSMITTAL

DATE July 3,1991	JOB NO. 1900371
ATTENTION Darryl Cook	
RE: "AS-BUILT"	
SEDIMENT BASIN	
OWENS-ILLINOIS	

TO James City County
Code Compliance

WE ARE SENDING YOU ☒ Attached ☐ Under separate cover via _____ the following items:

☐ Shop drawings ☒ Prints ☐ Plans ☐ Samples ☐ Specifications
☐ Copy of letter ☐ Change order ☐ _____

COPIES	DATE	NO.	DESCRIPTION
1	7/3/91	2	As-Built Plans

WC007
WC024 ALSO ??

THESE ARE TRANSMITTED as checked below:

☒ For approval ☐ Approved as submitted ☐ Resubmit _____ copies for approval
☐ For your use ☐ Approved as noted ☐ Submit _____ copies for distribution
☐ As requested ☐ Returned for corrections ☐ Return _____ corrected prints
☐ For review and comment ☐ _____
☐ FOR BIDS DUE _____ 19 _____ ☐ PRINTS RETURNED AFTER LOAN TO US

REMARKS

DARRYL,
IT APPEARS THAT THE POND WAS UNDERCUT
0.85' AS INDICATED BY AS-BUILT ELEVATIONS.

COPY TO _____

SIGNED: Tom Schlett

If enclosures are not as noted, kindly notify us at once.

PRODUCT 240-2 (NEBS) Inc. Groton, Mass. 01471

COUNTY OF JAMES CITY, VIRGINIA
EROSION AND SEDIMENTATION CONTROL BOND

Bond No. 02S100017398 BCA285

KNOW ALL MEN BY THESE PRESENTS: that we Owens-Illinois, Inc., Principal, and The Aetna Casualty and Surety Company, as Surety, are held and firmly bound unto James City County, Virginia, Obligee, of the Commonwealth of Virginia, in the Penal Sum of ($24,000.00) Twenty Four Thousand dollars, for the payment hereof to the Obligee, the Principal binds its heirs, executors, administrators, successors and assigns, and the Surety binds itself, its successors, and assigns severally and jointly by their presents and to each hereby waive our homestead exemption as to this debt and obligation.

WHEREAS, the Principal desires to have approved by James City County, Virginia, a certain erosion and sedimentation control plan pursuant to the terms of the Code of the County of James City, Virginia, (and any amendment thereto) for a project known as System Room and Machine Repair Expansion, located at 150 Industrial Blvd. - Toano, VA 23168, and in order to have said plan approved, said Principal must have complied with all terms and provisions of said code.

NOW, THEREFORE, THE CONDITION OF THIS OBLIGATION IS SUCH, that if the above Principal shall satisfactorily complete the erosion and sedimentation control measures in accordance with the approved plan and Chapter 5A of the Code of the County of James City, Erosion and Sedimentation Control, and shall fully indemnify and save harmless the Obligee from all costs and damages which the Obligee may suffer by reason of the Principal's failure to do so then this obligation shall be void, otherwise to remain in full force and effect.

PROVIDED FURTHER, that this is a continuous bond and the Surety hereby waives notice of any extension hereunder granted by Obligee to Principal.

CORPORATION:

(Impress Corporate Seal here)

Owens-Illinois, Inc.
Principal

ATTEST:

BY X William F. Buckley
W.F.Buckley, Vice-President

BY X R.E. James
R.E. James - Assistant Secretary

INDIVIDUAL OR PARTNERSHIP:

Principal

Principal

(Impress Corporate Seal here)

Witness

The Aetna Casualty and Surety Company
Surety

BY Pamela A. Brown
Attorney in Fact

Pamela A. Brown, Attorney In Fact
136 N Summit Street, Toledo, OH 43604
Address of Home Office

Picton Cavanaugh, Inc.
Name & Address of Resident Agent

COUNTY OF JAMES CITY, VIRGINIA
EROSION AND SEDIMENTATION CONTROL BOND

Bond No. 02 S 100017398 BCA 296

KNOW ALL MEN BY THESE PRESENTS: that we Owens-Brockway Glass Container, Inc., Principal, and THE AETNA CASUALTY AND SURETY COMPANY, as Surety, are held and firmly bound unto James City County, Virginia, Obligee, of the Commonwealth of Virginia, in the Penal Sum of TWENTY SIX THOUSAND ($26,000.00) dollars, for the payment hereof to the Obligee, the Principal binds its heirs, executors, administrators, successors and assigns, and the Surety binds itself, its successors, and assigns severally and jointly by their presents and to each hereby waive our homestead exemption as to this debt and obligation.

WHEREAS, the Principal desires to have approved by James City County, Virginia, a certain erosion and sedimentation control plan pursuant to the terms of the Code of the County of James City, Virginia, (and any amendment thereto) for a project known as PAVED SURFACE IMPROVEMENTS, located at 150 INDUSTRIAL BLVD, T, and in order to have said plan approved, said Principal must have complied with all terms and provisions of said code.

NOW, THEREFORE, THE CONDITION OF THIS OBLIGATION IS SUCH, that if the above Principal shall satisfactorily complete the erosion and sedimentation control measures in accordance with the approved plan and Chapter 5A of the Code of the County of James City, Erosion and Sedimentation Control, and shall fully indemnify and save harmless the Obligee from all costs and damages which the Obligee may suffer by reason of the Principal's failure to do so then this obligation shall be void, otherwise to remain in full force and effect.

PROVIDED FURTHER, that this is a continuous bond and the Surety hereby waives notice of any extension hereunder granted by Obligee to Principal.

CORPORATION:

(Impress Corporate Seal here)

OWENS-BROCKWAY GLASS CONTAINER, INC.
Principal

BY John L. Hodges
Vice- President
J.L. Hodges

ATTEST:

BY R.E. James
R.E. James - Asst. Secretary

INDIVIDUAL OR PARTNERSHIP:

Principal

Principal

(Impress Corporate Seal here)

THE AETNA CASUALTY AND SURETY COMPANY
Surety

Suzanne R. Barlow
Witness

BY Catherine M. Krueger
Attorney in Fact
CATHERINE M. KRUEGER

PIGTON CAVANAUGH, INC.
P.O. BOX 2167, TOLEDO, OHIO 43603
Name & Address of ~~Resident~~ Agent

500 HUNTINGTON BANK BUILDING, CLEVELAND, OHIO
Address of Home Office

POWER OF ATTORNEY MUST BE ATTACHED

0358C

Rev.8-89

Aetna
LIFE & CASUALTY

THE ÆTNA CASUALTY AND SURETY COMPANY
Hartford, Connecticut 06115

POWER OF ATTORNEY AND CERTIFICATE OF AUTHORITY OF ATTORNEY(S)-IN-FACT

KNOW ALL MEN BY THESE PRESENTS, THAT THE ÆTNA CASUALTY AND SURETY COMPANY, a corporation duly organized under the laws of the State of Connecticut, and having its principal office in the City of Hartford, County of Hartford, State of Connecticut, hath made, constituted and appointed, and does by these presents make, constitute and appoint Catherine M. Krueger, Harry W. Falconer, Ronald L. Murray, Carole Whipple, Pamela A. Brown, Patti L. Little or Michael S. Spilis - -

of Toledo, Ohio, its true and lawful Attorney(s)-in-Fact, with full power and authority hereby conferred to sign, execute and acknowledge, at any place within the United States, or, if the following line be filled in, within the area there designated , the following instrument(s):

by his/her sole signature and act, any and all bonds, recognizances, contracts of indemnity, and other writings obligatory in the nature of a bond, recognizance, or conditional undertaking, and any and all consents incident thereto

and to bind THE ÆTNA CASUALTY AND SURETY COMPANY, thereby as fully and to the same extent as if the same were signed by the duly authorized officers of THE ÆTNA CASUALTY AND SURETY COMPANY, and all the acts of said Attorney(s)-in-Fact, pursuant to the authority herein given, are hereby ratified and confirmed.

This appointment is made under and by authority of the following Standing Resolutions of said Company which Resolutions are now in full force and effect:

VOTED: That each of the following officers: Chairman, Vice Chairman, President, Any Executive Vice President, Any Senior Vice President, Any Vice President, Any Assistant Vice President, Any Secretary, Any Assistant Secretary, may from time to time appoint Resident Vice Presidents, Resident Assistant Secretaries, Attorneys-in-Fact, and Agents to act for and on behalf of the Company and may give any such appointee such authority as his certificate of authority may prescribe to sign with the Company's name and seal with the Company's seal bonds, recognizances, contracts of indemnity, and other writings obligatory in the nature of a bond, recognizance, or conditional undertaking, and any of said officers or the Board of Directors may at any time remove any such appointee and revoke the power and authority given him.

VOTED: That any bond, recognizance, contract of indemnity, or writing obligatory in the nature of a bond, recognizance, or conditional undertaking shall be valid and binding upon the Company when (a) signed by the Chairman, the Vice Chairman, the President, an Executive Vice President, a Senior Vice President, a Vice President, an Assistant Vice President or by a Resident Vice President, pursuant to the power prescribed in the certificate of authority of such Resident Vice President, and duly attested and sealed with the Company's seal by a Secretary or Assistant Secretary or by a Resident Assistant Secretary, pursuant to the power prescribed in the certificate of authority of such Resident Assistant Secretary; or (b) duly executed (under seal, if required) by one or more Attorneys-in-Fact pursuant to the power prescribed in his or their certificate or certificates of authority.

This Power of Attorney and Certificate of Authority is signed and sealed by facsimile under and by authority of the following Standing Resolution voted by the Board of Directors of THE ÆTNA CASUALTY AND SURETY COMPANY which Resolution is now in full force and effect:

VOTED: That the signature of each of the following officers: Chairman, Vice Chairman, President, Any Executive Vice President, Any Senior Vice President, Any Vice President, Any Assistant Vice President, Any Secretary, Any Assistant Secretary, and the seal of the Company may be affixed by facsimile to any power of attorney or to any certificate relating thereto appointing Resident Vice Presidents, Resident Assistant Secretaries or Attorneys-in-Fact for purposes only of executing and attesting bonds and undertakings and other writings obligatory in the nature thereof, and any such power of attorney or certificate bearing such facsimile signature or facsimile seal shall be valid and binding upon the Company and any such power so executed and certified by such facsimile signature and facsimile seal shall be valid and binding upon the Company in the future with respect to any bond or undertaking to which it is attached.

IN WITNESS WHEREOF, THE ÆTNA CASUALTY AND SURETY COMPANY has caused this instrument to be signed by its Assistant Vice President, and its corporate seal to be hereto affixed this 2nd day of February, 19 89

THE ÆTNA CASUALTY AND SURETY COMPANY

By Joseph P. Kiernan
Joseph P. Kiernan
Assistant Vice President

State of Connecticut
County of Hartford } ss. Hartford

On this 2nd day of February, 19 89, before me personally came JOSEPH P. KIERNAN, to me known, who, being by me duly sworn, did depose and say: that he/she is Assistant Vice President of THE ÆTNA CASUALTY AND SURETY COMPANY, the corporation described in and which executed the above instrument; that he/she knows the seal of said corporation; that the seal affixed to the said instrument is such corporate seal; and that he/she executed the said instrument on behalf of the corporation by authority of his/her office under the Standing Resolutions thereof.

George A. Perry, Jr.
Notary Public
My commission expires March 31, 19 91
George A. Perry, Jr.

CERTIFICATE

I, the undersigned, Secretary of THE ÆTNA CASUALTY AND SURETY COMPANY, a stock corporation of the State of Connecticut, DO HEREBY CERTIFY that the foregoing and attached Power of Attorney and Certificate of Authority remains in full force and has not been revoked; and furthermore, that the Standing Resolutions of the Board of Directors, as set forth in the Certificate of Authority, are now in force.

Signed and Sealed at the Home Office of the Company, in the City of Hartford, State of Connecticut. Dated this 11th day of June, 19 90

By John W. Welch
John W. Welch, Secretary

99132_OWENS_ILLINOIS_SITE_IMPROVEMENTS - 099

SILTATION AGREEMENT

THIS AGREEMENT, made this 12 day of June, 1990, by and between Owens-Illinois, Inc., and all successors in interest, a corporation, hereinafter called "Developer", party of the first part, and the Board of Supervisors of James City County, Virginia, hereinafter called "County", party of the second part, and BERNARD M. FARMER JR, hereinafter called "Agent" (Director of Code Compliance), party of the third part.

WITNESSETH:

WHEREAS, Developer, desires approval of plans by the Director of Code Compliance for the County of James City, for a project known as OWENS-ILLINOIS SITE IMPROVEMENTS (SYSTEMS ROOM AND MACHINE REPAIR EXPANSION) SP-29-90, located at 150 INDUSTRIAL BLVD, TOANO, VA 23168, which plans include provision of siltation and erosion control measures as required by Chapter 5A of the Code of the County of James City, Virginia, and

WHEREAS, County desires to ensure the installation, maintenance and adequate performance of such control measures,

NOW THEREFORE, for and in consideration of the foregoing premises and the following terms and conditions, and in further consideration of the approval of the aforesaid plans by the County and the issuance of permits for the work proposed to be done thereunder the parties hereto agree as follows:

1. Developer has either:

   a. deposited with Agent, and Agent by this execution hereof acknowledges that he holds, the sum of _____ _____ dollars ($_____) in escrow under and subject to the terms of this agreement, or;

   b. has furnished the County an irrevocable letter of credit or bond with corporate surety, whose terms and conditions are acceptable in substance and in form to the County Attorney, in the sum of TWENTY FOUR THOUSAND dollars ($24,000.00), which letter of credit or bond is under and subject to the terms of this agreement.

The deposit, letter of credit or bond is designed to insure performance of the Developer's obligations and to insure reimbursement to the County in the event that it performs work or causes work to be performed pursuant to paragraphs 2, 3 and 4 of this agreement.

2. In the event measures for the control of siltation and/or erosion as provided for on the plans referred to herein, or on any approved revision thereof, are not constructed at or prior to the occurrence of any rainstorm or other phenomena actually causing any siltation or erosion, County or its authorized agent shall have the right to enter upon Developer's property and construct such measures or do such other work as may be necessary to prevent further erosion or siltation, provided that County shall first give notice in writing to Developer or his superintendent of its intent so to do.

3. In the event measures for the control of siltation and/or erosion have been constructed, but fail, through overload and/or inadequate maintenance, to perform the function for which they were intended, County or its authorized agent, may in like manner to 2 above, enter to perform such reconstruction or maintenance as may be necessary to restore performance in accord with the plans, or approved revisions thereof, upon giving notice in writing to Developer or his superintendent of its intent so to do.

4. In the event there occurs siltation and/or erosion from the property covered by the plans referred to herein in sufficient quantity adversely to affect downstream drainage, or travel on any street, road, highway or other public way, then County may take such steps as may be necessary to restore functions to the affected drainage or travel way.

5. In the event County determines work shall be performed or causes to be performed work of any nature, including labor, use of equipment, and materials, under the provisions of 2, 3 and 4 above, either by County forces or contract, Agent shall draw and disburse to County on its order such sum or sums as may be requested, provided, however, that Agent's liability so to disburse shall be limited to the undistributed balance in its hands of:

a. the escrow amount, or
b. the letter of credit, or
c. the bond

Such surety may be drawn in total, if at the time the surety is to expire, all improvements are not complete and surety has not been adequately extended or replaced to ensure completion of the improvements. A notice that such draw has been made shall be delivered or mailed by County to Developer.

6. In the event Agent makes disbursement pursuant hereto, Developer agrees to deposit within ten (10) days of such disbursement, an amount sufficient either:

a. to restore escrow amount to its original balance as shown in paragraph 1; or
b. to furnish an additional letter of credit in the amount of the draft; or
c. to secure such additional bonds as to restore same to its original balance as shown in paragraph 1.

7. It is expressly agreed by all parties hereto that it is the purpose and intent of this agreement to ensure the installation, maintenance, and performance of measures provided for on approved plans or revisions thereof, for the control of siltation and erosion, and for the restoration of function of facilities for drainage or vehicular travel if such facilities are adversely affected in their function by siltation or erosion from the property the subject of such plans. This agreement shall not be deemed to create or affect any liability of any party hereto for any damage alleged to result from or be caused by erosion or siltation.

8. It is expressly agreed by the parties hereto that either:

a. the escrow amount shall be held by Agent unless distributed in accordance with 5 above, or paid to County as part of the cost to complete improvements required by ordinance and/or agreement, or released in writing by County, through its agent, the Director of Code Compliance; or

b. the letter of credit or bond shall be held by Agent unless distributed in accordance with 5 above, or paid to County as part of the cost to complete improvements required by ordinance and/or agreement, or released in writing by County, through its Agent, the Director of Code Compliance.

(SEAL)

Owens-Illinois Inc.
Developer

BY: Robert E. Chubomelo
PLANT ENGINEER

ATTEST:

_____(SEAL)
Agent

BY: Darryl E Cook for
Bernard Farmer, Jr.

Approved as to form:

Lee P. Rogers
County Attorney

0359C

Rev.11-89

CODE COMPLIANCE PLAN REVIEW COMMENTS
OWENS-ILLINOIS SITE IMPROVEMENTS
PLAN NO. SP-29-90 DEL
April 20, 1990

1. A Land Disturbing Permit and Siltation Agreement, with surety, are required for this project.

2. As-built drawings shall be provided for the infiltation trenches upon completion.

3. A preconstruction conference shall be held on-site between the County, the Developer, the Project Engineer and the Contractor prior to issuance of a Land Disturbing Permit.

4. Add a note to the plan stating that the infiltration trenches shall not be constructed until the contributing drainage areas have been stabilized.

5. Revise the dimensions of the trench adjacent to the parking area driveway from 1 foot deep and 6 feet wide to 2 feet deep and 3 feet wide.

6. Wherever the No. 57 Stone is mentioned on the plans regarding the infiltration trenches, specify that washed No. 57 Stone is to be used.

7. An Inspection and Maintenance Agreement must be executed with the County for the infiltration trenches prior to final site plan approval.

8. Provide a pretreatment facility for the three underground infiltration trenches to remove sediment and other grit from the water before entering the trenches. This would be a septic tank or similar facility recommended in the Washington COG Publication Controlling Urban Runoff.

9. Provide soils test information to verify the permeability rate stated in the Runoff Analysis.

10. Provide an observation well in the center of each infiltration trench.

0367C
4890c

PLAN IMPLEMENTATION

I, R. E. Chilmulla ,(Signature) certify that I fully understand the provisions of the James City County, Virginia, Erosion and Sediment Control Ordinance and agree to carry out the approved erosion and sedimentation control plan on the above-referenced project. I also understand that the approved erosion and sedimentation control plan becomes null and void on December 31, 1990 and no further work subject to Chapter 5A of the County Code shall be allowed unless and until an additional or updated erosion and sedimentation control plan has been submitted and approved in accordance with Chapter 5A or unless all requirements of the approved control plan have been completed by December 31, 1990 in accord with such plan and verified by the on-site inspection by the Administrator or his designee.

- -

(For office use only)

PERMIT NO. 91-1 BOND AMOUNT $ 24,000

REVIEWED BY Darryl E Cook DATE 7/2/90

SPECIFIC REQUIREMENTS _____

APPROVED BY Bernard Farmer Jr. ADMINISTRATOR - EROSION AND SEDIMENT CONTROL ORDINANCE

DATE 7-2-90

Renewal of E&S plan requested by:

R. E. Chilmulla

Renewal Reviewed By:

Darryl E. Cook

Renewal Date:

11-30-90

Renewal Approved By:

Bernard Farmer Jr.

Bernard M. Farmer, Jr., Administrator
Erosion and Sediment Control Ordinance

Updated Erosion and Sedimentation Control Plan becomes null and void on:

6-31-91

James City County
Department of Code Compliance
P.O. Box JC
Williamsburg, VA 23187

Jamestown·1607
JAMES CITY COUNTY

Released 5-20-91

LAND DISTURBING PERMIT

Application

GEO 1H4

LANDOWNER

NAME OWENS-ILLINOIS GLASS CONTAINER, INC DATE 6/8/90

ADDRESS (STREET) 150 INDUSTRIAL BLVD, TOANO, VA 23168

P.O. BOX PHONE 566-2428

PROJECT OWENS-ILLINOIS SITE IMPROVEMENTS (A.K.A. SYSTEMS ROOM AND MACHINE REPAIR EXPANSION) SP-29-90

LOCATION (USE STREET ADDRESS) 150 INDUSTRIAL BLVD

TOTAL SIZE OF TRACT OR LOT 70.7 AC.

TOTAL AREA TO BE DISTURBED 45,000 SF

DESCRIPTION OF LAND DISTURBING ACTIVITY BUILDING ADDITIONS, PICNIC SHELTER & MISC. PAVING

RIGHT OF ENTRY

I, R.E. [illegible], (Signature) hereby grant designated officials of James City County, Virginia, the right to enter my property for the purpose of inspection or monitoring for compliance with the approved erosion and sediment plan on the above-referenced project.

James City County
Department of Code Compliance
P.O. Box JC
Williamsburg, VA 23187

Jamestown·1607
JAMES CITY COUNTY

Release 7-17-91

LAND DISTURBING PERMIT

Application

GEO 144

LANDOWNER

NAME OWENS - BROCKWAY GLASS CONTAINER, INC. DATE AUGUST 16, 1990

ADDRESS (STREET) 150 INDUSTRIAL BLVD, TOANO, VA 23168

P.O. BOX PHONE 566-2423

PROJECT PAVED SURFACE IMPROVEMENTS

LOCATION (USE STREET ADDRESS) 150 INDUSTRIAL BLVD

TOTAL SIZE OF TRACT OR LOT 59.7 ACRES

TOTAL AREA TO BE DISTURBED 120,000 S.F.

DESCRIPTION OF LAND DISTURBING ACTIVITY CLEARING AND GRADING FOR PAVEMENT WIDENING & PAVED TRAILER STORAGE AREA

RIGHT OF ENTRY

I, G. J. Lemieux (Signature) hereby grant designated
GERARD J. LEMIEUX
officials of James City County, Virginia, the right to enter my property for the purpose of inspection or monitoring for compliance with the approved erosion and sediment plan on the above-referenced project.

PLAN IMPLEMENTATION

I, G. J. Lemieux (Signature) certify that I fully
GERALD J. LEMIEUX
understand the provisions of the James City County, Virginia, Erosion and Sediment Control Ordinance and agree to carry out the approved erosion and sedimentation control plan on the above-referenced project. I also understand that the approved erosion and sedimentation control plan becomes null and void on February 28, 1991 and no further work subject to Chapter 5A of the County Code shall be allowed unless and until an additional or updated erosion and sedimentation control plan has been submitted and approved in accordance with Chapter 5A or unless all requirements of the approved control plan have been completed by ~~MAY 1, 1991~~ DEC February 28, 1991 in accord with such plan and verified by the on-site inspection by the Administrator or his designee.

- -

(For office use only)

PERMIT NO. 91-16 BOND AMOUNT $ 26,000

REVIEWED BY Darryl E Cook DATE 8/29/90

SPECIFIC REQUIREMENTS

APPROVED BY Bernard Farmer ADMINISTRATOR - EROSION AND SEDIMENT CONTROL ORDINANCE

DATE 8-30-90

Renewal of E&S plan requested by:

✓ G J Lemieux 1-25-91

Renewal Reviewed By:

Darryl E. Cook

Renewal Date:

1-29-91

Renewal Approved By:

Bernard Farmer

Bernard M. Farmer, Jr., Administrator
Erosion and Sediment Control Ordinance

Updated Erosion and Sedimentation Control Plan becomes null and void on:

8-28-91

LIFE & CASUALTY

THE ÆTNA CAS[illegible]TY AND SURETY COMPANY
Hartfo[illegible] Connecticut 06115

POWER OF ATTORNEY AND CERTIFICATE OF AUTHORITY OF ATTORNEY(S)-IN-FACT

KNOW ALL MEN BY THESE PRESENTS, THAT THE ÆTNA CASUALTY AND SURETY COMPANY, a corporation duly organized under the laws of the State of Connecticut, and having its principal office in the City of Hartford, County of Hartford, State of Connecticut, hath made, constituted and appointed, and does by these presents make, constitute and appoint Catherine M. Krueger, Harry W. Falconer, Ronald L. Murray, Carole Whipple, Pamela A. Brown, Patti L. Little or Michael S. Spilis - -

of Toledo, Ohio, its true and lawful Attorney(s)-in-Fact, with full power and authority hereby conferred to sign, execute and acknowledge, at any place within the United States, or, if the following line be filled in, within the area there designated , the following instrument(s):

by his/her sole signature and act, any and all bonds, recognizances, contracts of indemnity, and other writings obligatory in the nature of a bond, recognizance, or conditional undertaking, and any and all consents incident thereto

and to bind THE ÆTNA CASUALTY AND SURETY COMPANY, thereby as fully and to the same extent as if the same were signed by the duly authorized officers of THE ÆTNA CASUALTY AND SURETY COMPANY, and all the acts of said Attorney(s)-in-Fact, pursuant to the authority herein given, are hereby ratified and confirmed.

This appointment is made under and by authority of the following Standing Resolutions of said Company which Resolutions are now in full force and effect:

VOTED: That each of the following officers: Chairman, Vice Chairman, President, Any Executive Vice President, Any Senior Vice President, Any Vice President, Any Assistant Vice President, Any Secretary, Any Assistant Secretary, may from time to time appoint Resident Vice Presidents, Resident Assistant Secretaries, Attorneys-in-Fact, and Agents to act for and on behalf of the Company and may give any such appointee such authority as his certificate of authority may prescribe to sign with the Company's name and seal with the Company's seal bonds, recognizances, contracts of indemnity, and other writings obligatory in the nature of a bond, recognizance, or conditional undertaking, and any of said officers or the Board of Directors may at any time remove any such appointee and revoke the power and authority given him.

VOTED: That any bond, recognizance, contract of indemnity, or writing obligatory in the nature of a bond, recognizance, or conditional undertaking shall be valid and binding upon the Company when (a) signed by the Chairman, the Vice Chairman, the President, an Executive Vice President, a Senior Vice President, a Vice President, an Assistant Vice President or by a Resident Vice President, pursuant to the power prescribed in the certificate of authority of such Resident Vice President, and duly attested and sealed with the Company's seal by a Secretary or Assistant Secretary or by a Resident Assistant Secretary, pursuant to the power prescribed in the certificate of authority of such Resident Assistant Secretary; or (b) duly executed (under seal, if required) by one or more Attorneys-in-Fact pursuant to the power prescribed in his or their certificate or certificates of authority.

This Power of Attorney and Certificate of Authority is signed and sealed by facsimile under and by authority of the following Standing Resolution voted by the Board of Directors of THE ÆTNA CASUALTY AND SURETY COMPANY which Resolution is now in full force and effect:

VOTED: That the signature of each of the following officers: Chairman, Vice Chairman, President, Any Executive Vice President, Any Senior Vice President, Any Vice President, Any Assistant Vice President, Any Secretary, Any Assistant Secretary, and the seal of the Company may be affixed by facsimile to any power of attorney or to any certificate relating thereto appointing Resident Vice Presidents, Resident Assistant Secretaries or Attorneys-in-Fact for purposes only of executing and attesting bonds and undertakings and other writings obligatory in the nature thereof, and any such power of attorney or certificate bearing such facsimile signature or facsimile seal shall be valid and binding upon the Company and any such power so executed and certified by such facsimile signature and facsimile seal shall be valid and binding upon the Company in the future with respect to any bond or undertaking to which it is attached.

IN WITNESS WHEREOF, THE ÆTNA CASUALTY AND SURETY COMPANY has caused this instrument to be signed by its Assistant Vice President, and its corporate seal to be hereto affixed this 2nd day of February, 19 89

THE ÆTNA CASUALTY AND SURETY COMPANY

By Joseph P. Kiernan
Joseph P. Kiernan
Assistant Vice President

State of Connecticut
County of Hartford } ss. Hartford

On this 2nd day of February, 19 89, before me personally came JOSEPH P. KIERNAN to me known, who, being by me duly sworn, did depose and say: that he/she is Assistant Vice President of THE ÆTNA CASUALTY AND SURETY COMPANY, the corporation described in and which executed the above instrument; that he/she knows the seal of said corporation; that the seal affixed to the said instrument is such corporate seal; and that he/she executed the said instrument on behalf of the corporation by authority of his/her office under the Standing Resolutions thereof.

George A. Perry, Jr.
My commission expires March 31, 19 91 Notary Public
George A. Perry, Jr.

CERTIFICATE

I, the undersigned, Secretary of THE ÆTNA CASUALTY AND SURETY COMPANY, a stock corporation of the State of Connecticut, DO HEREBY CERTIFY that the foregoing and attached Power of Attorney and Certificate of Authority remains in full force and has not been revoked; and furthermore, that the Standing Resolutions of the Board of Directors, as set forth in the Certificate of Authority, are now in force.

Signed and Sealed at the Home Office of the Company, in the City of Hartford, State of Connecticut. Dated this 22nd day of August, 19 90

By John W. Welch
John W. Welch, Secretary

IS-1921-E (M) 3-79
PRINTED IN U.S.A.

SILTATION AGREEMENT

THIS AGREEMENT, made this 27th day of AUGUST, 1990, by and between OWENS-BROCKWAY GLASS CONTAINER, INC., and all successors in interest, a corporation, hereinafter called "Developer", party of the first part, and the Board of Supervisors of James City County, Virginia, hereinafter called "County", party of the second part, and BERNARD L. FARMER JR. hereinafter called "Agent" (Director of Code Compliance), party of the third part.

WITNESSETH:

WHEREAS, Developer, desires approval of plans by the Director of Code Compliance for the County of James City, for a project known as PAVED SURFACE IMPROVEMENTS, located at 150 INDUSTRIAL BLVD - TOANO, VA, which plans include provision of siltation and erosion control measures as required by Chapter 5A of the Code of the County of James City, Virginia, and

WHEREAS, County desires to ensure the installation, maintenance and adequate performance of such control measures,

NOW THEREFORE, for and in consideration of the foregoing premises and the following terms and conditions, and in further consideration of the approval of the aforesaid plans by the County and the issuance of permits for the work proposed to be done thereunder the parties hereto agree as follows:

1. Developer has either:
   a. deposited with Agent, and Agent by this execution hereof acknowledges that he holds, the sum of _____ _____ dollars ($_____) in escrow under and subject to the terms of this agreement, or;
   b. has furnished the County an irrevocable letter of credit or bond with corporate surety, whose terms and conditions are acceptable in substance and in form to the County Attorney, in the sum of TWENTY SIX THOUSAND dollars ($26,000.00), which letter of credit or bond is under and subject to the terms of this agreement.

The deposit, letter of credit or bond is designed to insure performance of the Developer's obligations and to insure reimbursement to the County in the event that it performs work or causes work to be performed pursuant to paragraphs 2, 3 and 4 of this agreement.

2. In the event measures for the control of siltation and/or erosion as provided for on the plans referred to herein, or on any approved revision thereof, are not constructed at or prior to the occurrence of any rainstorm or other phenomena actually causing any siltation or erosion, County or its authorized agent shall have the right to enter upon Developer's property and construct such measures or do such other work as may be necessary to prevent further erosion or siltation, provided that County shall first give notice in writing to Developer or his superintendent of its intent so to do.

3. In the event measures for the control of siltation and/or erosion have been constructed, but fail, through overload and/or inadequate maintenance, to perform the function for which they were intended, County or its authorized agent, may in like manner to 2 above, enter to perform such reconstruction or maintenance as may be necessary to restore performance in accord with the plans, or approved revisions thereof, upon giving notice in writing to Developer or his superintendent of its intent so to do.

4. In the event there occurs siltation and/or erosion from the property covered by the plans referred to herein in sufficient quantity adversely to affect downstream drainage, or travel on any street, road, highway or other public way, then County may take such steps as may be necessary to restore functions to the affected drainage or travel way.

5. In the event County determines work shall be performed or causes to be performed work of any nature, including labor, use of equipment, and materials, under the provisions of 2, 3 and 4 above, either by County forces or contract, Agent shall draw and disburse to County on its order such sum or sums as may be requested, provided, however, that Agent's liability so to disburse shall be limited to the undistributed balance in its hands of:

a. the escrow amount, or
b. the letter of credit, or
c. the bond

Such surety may be drawn in total, if at the time the surety is to expire, all improvements are not complete and surety has not been adequately extended or replaced to ensure completion of the improvements. A notice that such draw has been made shall be delivered or mailed by County to Developer.

6. In the event Agent makes disbursement pursuant hereto, Developer agrees to deposit within ten (10) days of such disbursement, an amount sufficient either:

a. to restore escrow amount to its original balance as shown in paragraph 1; or
b. to furnish an additional letter of credit in the amount of the draft; or
c. to secure such additional bonds as to restore same to its original balance as shown in paragraph 1.

7. It is expressly agreed by all parties hereto that it is the purpose and intent of this agreement to ensure the installation, maintenance, and performance of measures provided for on approved plans or revisions thereof, for the control of siltation and erosion, and for the restoration of function of facilities for drainage or vehicular travel if such facilities are adversely affected in their function by siltation or erosion from the property the subject of such plans. This agreement shall not be deemed to create or affect any liability of any party hereto for any damage alleged to result from or be caused by erosion or siltation.

8. It is expressly agreed by the parties hereto that either:

a. the escrow amount shall be held by Agent unless distributed in accordance with 5 above, or paid to County as part of the cost to complete improvements required by ordinance and/or agreement, or released in writing by County, through its agent, the Director of Code Compliance; or

b. the letter of credit or bond shall be held by Agent unless distributed in accordance with 5 above, or paid to County as part of the cost to complete improvements required by ordinance and/or agreement, or released in writing by County, through its Agent, the Director of Code Compliance.

(SEAL)

OWENS-BROCKWAY GLASS CONTAINER, INC.
Developer

BY: G J Lemieux
GERALD J. LEMIEUX - PLANT MANAGER

ATTEST:

_____(SEAL)
Agent

BY: Bernard Farmer

Approved as to form:

Leo P. Rogers
County Attorney

0359C

Rev.11-89

JAMES CITY COUNTY

DATE:

TO: Leo

FROM: DARRYL

___ For Your Comments
___ For Your Approval
___ Note & Return
___ Note & File
___ Reply & Send Me Copy
___ Take Appropriate Action

___ See Me
___ FYI
___ Signature

COMMENTS:

RECEIVED
JUL 2 1990
County Attorney
James City County, VA.

RECEIVED
JUN 11 1990
County Attorney
James City County, VA.

RECEIVED
JUN 15 1990
County Attorney
James City County, VA.

L.P.R.
Not approved
Need evidence
of corporate
authority
See attached letter from
Owen Illinois - Dec

RECEIVED
7-12-90

O.K.
L.P.R.
7/12

Leo
Please sign
agreement
thanks.

99132_OWENS_ILLINOIS_SITE_IMPROVEMENTS - 1