Stormwater Division

MEMORANDUM

DATE: March 11, 2010

TO: Michael J. Gillis, Virginia Correctional Enterprises Document Management Services

FROM: Jo Anna Ripley, Stormwater

PO: 270712

RE: Files Approved for Scanning

General File ID or BMP ID: CC022

PIN: 3911200001B

Subdivision, Tract, Business or Owner Name (if known): Ironbound Village

Property Description: Common Open Space Phase 1

Site Address: 5335 Palmer Lane

(For internal use only) **Box** 12 **Drawer:** 7

Agreements: (in file as of scan date) **N** **Book or Doc#:** **Page:**

Comments
As of 3/11/10, the owner of the parcel is: Cutting Edge Development LLC

CC022

Contents for Stormwater Management Facilities As-built Files

Each file is to contain:

1. As-built plan
2. Completed construction certification
3. Construction Plan
4. Design Calculations
5. Watershed Map
6. Maintenance Agreement
7. Correspondence with owners
8. Inspection Records
9. Enforcement Actions

Stormwater Division

MEMORANDUM

DATE: July 22, 2014
TO: Michael J. Gillis, Virginia Correctional Enterprises Document Management Services
FROM: Jacob Smith, Stormwater Intern
PO: 110426
RE: Files Approved for Scanning

NAME PDF/SCANNED FILE:	IRONBOUND VILLAGE		
BMP ID OR GEN FILE NUMBER:	99179	**OWNER NAME:**	CUTTING EDGE DEVELOPMENT HANKINS FAMILY
PIN:	N/A	**SITE ADDRESS:**	N/A
		LEGAL DESCRIPTION:	N/A

MAINTENANCE AGREEMENT IN FILE:	N/A	**BOOK/PAGE OR DOCUMENT NO.:**	N/A	**OTHER DESCRIPTION:**	N/A

BOX NO.:	1	**COMMENTS:**	AMENDMENT

Printed On 09/15/2010 By WOOLRIDGE

Prepared By: Michael Drury
101-C Mounts Bay Road
Williamsburg, VA 23187

PB87/100
We own 20% of facility

040024115

TAX MAP NO.:3911300001A, 3911300002B, 3911300003, 3911300004, 3911300001B

AMENDMENT OF DECLARATION OF COVENANTS AND RESTRICTIONS

This Amendment, made this 22nd day of September, 2004 by **CUTTING EDGE DEVELOPMENT, L.L.C.**, a Virginia Limited Liability Company, hereinafter "Developer", whose address is 739 Thimble Shoals Boulevard, Newport News, Virginia 23606 ; **GEORGE S. HANKINS, JR.** and **HOWARD B. HANKINS** , hereinafter "Hankins" whose business address is 739 Thimble Shoals Boulevard, Newport News, Virginia 23606; and **IRONBOUND VILLAGE ASSOCIATION,** a Virginia Corporation, hereinafter "Association", whose address is 739 Thimble Shoals Boulevard, Newport News, Virginia 23606.

WITNESSETH:

WHEREAS, the Developer executed that certain Declaration of Covenants and Restrictions dated February 20, 2002 (the "Declaration") filed and recorded with the Clerk of the Circuit Court for the City of Williamsburg and County of James City on October 23, 2002 as Instrument No. 020024649, and;

WHEREAS, the Developer and Hankins collectively own the parcels of real property located in James City County, Virginia, as more particularly described on "Exhibit A" which is attached hereto and incorporated herein by reference and hereinafter referred to as the "Commercial Properties"; and

WHEREAS, the Commercial Properties are located in the community of Ironbound Village, and will contain office, commercial and related uses; and

WHEREAS, the Developer, Hankins and Association desire to exclude the Commercial Properties from the requirements of the Declaration; and

WHEREAS, the Developer, Hankins and Association desire to amend and supplement the Declaration; and

WHEREAS, the Developer, Hankins and Association have approved certain amendments and supplements to the Declaration in accordance with Article IX, Section 2, of the Declaration;

NOW THEREFORE, the Declaration is hereby amended and supplemented as follows:

1. The Developer, Association and Hankins hereby declare that the Commercial Properties as more particularly described on "Exhibit A" which is attached hereto are hereby excluded from and no longer subject to the rights, privileges, covenants, restrictions, conditions, charges, and liens as set forth in the Declaration. This exclusion shall run with the Commercial Properties and inure to all parties having any right, title, or interest in the Commercial Properties or any portions

5

1 of 5

11997116.27 / 3632526.89

11997027.85 / 3632394.6
5335

5339
11997096.02
/ 362296.12

thereof, and to their successors and assigns.

2. The Developer, Association and Hankins declare that the Commercial Properties as more particularly described on "Exhibit A" which is attached hereto, shall be subject to the covenants, restrictions, conditions, and charges, hereinafter set forth in this Section 2 and shall run with the Commercial Properties and be binding on all parties having any right, title, or interest in the Commercial Properties and be binding on all the properties described in the Declaration, or any portions thereof, and to their successors and assigns.

A. The "Special Parking Area" as designated on that plat entitled " Subdivision Plat, Ironbound Village, Phase II Parcel 2, Being The Property Of Cutting Edge Development, LLC, Berkeley District, James City County, Virginia" dated January 12, 2004, revised June 7, 2004 and June 22, 2004, made by LandMark Design Group, which plat is recorded in the Clerk's Office of the Circuit Court for the City of Williamsburg and County of James City as Instrument No. 040024115, to which reference is hereby made for a more complete description, and such plat hereinafter referred to as the "Subdivision Plat", shall be for the primary use as parking for the owners of Lots 5 - 11 as identified on the Subdivision Plat (the "Lots"). The owners of the Lots and their guests, tenants and invitees shall have a perpetual, non-exclusive easement for vehicular parking over and across the Special Parking Area and a perpetual, non-exclusive easement of ingress and egress for vehicular and pedestrian traffic from the Lots and the Special Parking Area over and across the portion of the Commercial Properties shown and set out on the Subdivision Plat as "24.00' Ingress- Egress Easement to and from Palmer Lane. Furthermore, the Special Parking Area shall be maintained by the owners of the Commercial Properties to commercially reasonably standards at least consistent with the maintenance of the other parking areas on the Commercial Properties and may be utilized by the owners of the Commercial Properties for public overflow parking between the hours of 8:00 a.m. until 5:00 p.m.

B. The owners of the Commercial Properties may voluntarily or shall be obligated upon request of the Association, to participate in capital improvements to the area identified as "Phase I Parcel A, Recreation Open Space, Document No. 020023322" on the Subdivision Plat, and hereinafter referred to as "Recreation Open Space". Such capital improvements shall be agreed upon by the owners of the Commercial Properties and such obligation shall be extinguished upon the total accumulated expenditure of $5,000.00 by the owners of the Commercial Properties. Any request by the Association shall be binding upon the owners of the Commercial Properties when the request amount is matched by the Association, and such request is subject to any appropriation restrictions legally imposed upon any owner of the Commercial Properties. The owners of the Commercial Properties and their guests have the right of enjoyment of the Recreation Open Space.

C. The owners of the Commercial Properties shall participate in any capital improvement, of the area designated as "Parcel B, Common Open Space to (HOA) 1.85 ± ac., Stormwater Management Facility" on that plat entitled "Subdivision Plat, Ironbound Village, Phase I, James City County, Berkeley District, Commonwealth of Virginia" dated February 28, 2002, Made by LandMark Design Group, which plat is recorded in the Clerk's Office of the Circuit Court for the City of Williamsburg and County of James City in Plat Book 87, at page 100, to which reference

is hereby made for a more complete description, such area shall hereinafter be referred to as "Stormwater Facility". Capital improvement is defined as any reasonable cost of reconstruction, maintenance, repair, or replacement of the Stormwater Facility. The owners of the Commercial Properties, upon agreement on the reasonableness of the cost of the capital improvement shall be obligated to participate by sharing 20% of the capital improvement cost. Such obligation is subject to any appropriation restrictions legally imposed upon any owner of the Commercial Properties.

3. The Developer, Association and Hankins amend and supplement the Declaration by stating that if there are no Class A Members at the time of any action, the rights, duties and obligations of the Class A Members shall reside with the Class B Members, except that Class B Members shall only be entitled to one vote for each Lot owned.

IN WITNESS WHEREOF, the Developer, Hankins, and Association have caused this Amendment to be executed on the day and year first written above.

CUTTING EDGE DEVELOPMENT, L.L.C.
a Virginia Limited Liability Corporation
H. B. Hankins, Inc.
By: _____
Managing Member

IRONBOUND VILLAGE ASSOCIATION
a Virginia Corporation
By: _____
Title:

GEORGE S. HANKINS, JR.
_____

HOWARD B. HANKINS
_____

STATE OF VIRGINIA
CITY/~~COUNTY~~ OF Williamsburg, to wit:

The foregoing Agreement was acknowledged before me this 22 day of Sept., 2004,

by Howard B. Hankins, Managing Member of Cutting Edge Development, LLC.

Janie M. Hayes
Notary Public

My commission expires: 2-28-07

STATE OF VIRGINIA
CITY/~~COUNTY~~ OF Williamsburg, to wit:

The foregoing Agreement was acknowledged before me this 22 day of Sept., 2004, by George S. Hankins Jr., as _____ of Ironbound Village Association.

Janie M. Hayes
Notary Public

My commission expires: 2-28-07

STATE OF VIRGINIA
CITY/~~COUNTY~~ OF Williamsburg, to wit:

The foregoing Agreement was acknowledged before me this 22 day of Sept, 2004, by George S. Hankins, Jr.

Janie M. Hayes
Notary Public

My commission expires: 2-28-07

STATE OF VIRGINIA
CITY/~~COUNTY~~ OF Williamsburg, to wit:

The foregoing Agreement was acknowledged before me this 22 day of Sept, 2004, by Howard B. Hankins.

Janie M. Hayes
Notary Public

My commission expires: 2-28-07

EXHIBIT A

ALL THOSE certain pieces, lots or parcels of land, lying, situate and being in the County of James City, Virginia, shown and set out as : "Phase II, Parcel 1A, 7,116 S.F., 0.1634 acre"; "Phase II, Parcel 1B, 8,867 S.F., 0.2036 acre", "Phase II, Parcel B, 23,664 S.F., 0.5432 acre"; "Phase II, Parcel 3, P.B. 87, Pgs. 40-41"; and "Phase II, Parcel 4, 15,424 S.F., 0.3541 acre" on the plat of subdivision entitled "Ironbound Village Phase II, Being a subdivision of property of Cutting Edge Development, LLC, James City County, Berkeley District, Commonwealth of Virginia" dated 10/15/02, made by LandMark Design Group, which plat is recorded in the Clerk's Office of the Circuit Court for the City of Williamsburg and County of James City in Plat Book 89, at pages 3 - 4, as Instrument No. 020030677, to which reference is hereby made for a more complete description.

The parcels are also known as: 5300 Palmer Lane, JCC Tax Parcel No. 3911300001A: 5304 Palmer Lane, JCC Tax Parcel No. 3911300001B; 5324 Palmer Lane, JCC Tax Parcel No. 3911300002B; 5320 Palmer Lane, JCC Tax Parcel No. 3911300003; and 5340 Palmer Lane, JCC Tax Parcel No. 3911300004.

Prepared by:
Michael Drury
101-C Mounts Bay Road
Williamsburg, VA 23187

2 Large/Small Plat(s) Recorded herewith as # 040024115

VIRGINIA: CITY OF WILLIAMSBURG & COUNTY OF JAMES CITY
This document was admitted to record on 24 Sept. 04
at 11:50 AM/PM. The taxes imposed by Virginia Code Section 58.1-801, 58.1-802 & 58.1-814 have been paid.

STATE TAX	LOCAL TAX	ADDITIONAL TAX
$ —	$ —	$ —

TESTE: BETSY B. WOOLRIDGE, CLERK
BY: Betsy B. Woolridge Clerk

TEMPORARY SEDIMENT BASIN DESIGN DATA SHEET

(with or without an emergency spillway)

Project IRONBOUND VILLAGE

Basin # 1 Location NE Corner

Total area draining to basin: 6.9 acres.

Basin Volume Design

Wet Storage:

1. Minimum required volume = 67 cu. yds. x Total Drainage Area (acres).

   67 cu. yds. x 6.9 acres = 462 cu. yds.

2. Available basin volume = 636 cu. yds. at elevation 75. (From storage - elevation curve)

3. Excavate 636 cu. yds. to obtain required volume*.

   * Elevation corresponding to required volume = invert of the dewatering orifice.

4. Available volume before cleanout required.

   33 cu. yds. x 6.9 acres = 228 cu. yds.

5. Elevation corresponding to cleanout level = 73.

   (From Storage - Elevation Curve)

6. Distance from invert of the dewatering orifice to cleanout level = 2.0 ft. (Min. = 1.0 ft.)

Dry Storage:

7. Minimum required volume = 67 cu. yds. x Total Drainage Area (acres).

   67 cu. yds. x 6.9 acres = 462 cu. yds.

8. Total available basin volume at crest of riser* = 1,221 cu. yds. at elevation 77.0. (From Storage - Elevation Curve)

* Minimum = 134 cu. yds./acre of total drainage area.

9. Diameter of dewatering orifice = 4 in. $Q = \frac{(1221)(27)}{21600s} = 1.53c$

10. Diameter of flexible tubing = 6 in. (diameter of dewatering orifice plus 2 inches). $A = 1.53/\sqrt{2(4.32)(2/3)}\,(.6) = .6$ $d = 0.34' = 4''$

Preliminary Design Elevations

11. Crest of Riser = 77.7

Top of Dam = 80.0

Design High Water = 77

Upstream Toe of Dam = 70

Basin Shape

12. Length of Flow / Effective Width — L / We = $\frac{70}{25} = 2.8$

If > 2, baffles are not required ✓

If < 2, baffles are required _____

Runoff

13. Q_2 = 13.2 cfs (From Chapter 5) (1.0)(6.9)(5.45)(0.35) (A, I, C)

14. Q_{25} = 22.0 cfs (From Chapter 5) (1.1)(6.9)(8.27)(.35)

C=0.35 IS NOT OK.

Principal Spillway Design

15. With emergency spillway, required spillway capacity $Q_p = Q_2$ = 13.2 cfs. (riser and barrel)

Without emergency spillway, required spillway capacity $Q_p = Q_{25}$ = N/A cfs. (riser and barrel)

16. With emergency spillway:

Assumed available head (h) = 1.5 ft. (Using Q_2)

h = Crest of Emergency Spillway Elevation - Crest of Riser Elevation

Without emergency spillway:

Assumed available head (h) = N/A ft. (Using Q_{25})

h = Design High Water Elevation - Crest of Riser Elevation

17. Riser diameter (D_r) = 36 in. Actual head (h) = 1.5 ft.

(From Plate 3.14-8.)

Note: Avoid orifice flow conditions.

18. Barrel length (l) = 100 ft.

Head (H) on barrel through embankment = 9 ft.

(From Plate 3.14-7).

19. Barrel diameter = 18 in.

(From Plate 3.14-B [concrete pipe] or Plate 3.14-A [corrugated pipe]).

20. Trash rack and anti-vortex device

Diameter = 60 inches.

Height = 17 inches.

(From Table 3.14-D).

Emergency Spillway Design

21. Required spillway capacity $Q_e = Q_{25} - Q_p$ = 8.8 cfs.

22. Bottom width (b) = 8.0 ft.; the slope of the exit channel (s) = .08 ft./foot; and the minimum length of the exit channel (x) = 50 ft.
(From Table 3.14-C).

Anti-Seep Collar Design

23. Depth of water at principal spillway crest (Y) = 7 ft.

Slope of upstream face of embankment (Z) = 6 :1.

Slope of principal spillway barrel (S_b) = 1.0 %

Length of barrel in saturated zone (L_s) = 75 ft.

24. Number of collars required = 2 dimensions = 5.25

(from Plate 3.14-12).

Final Design Elevations

25. Top of Dam = 80.0

Design High Water = 77

Emergency Spillway Crest = 78.5

Principal Spillway Crest = 77.0

Dewatering Orifice Invert = 75.0

Cleanout Elevation = 73.0

Elevation of Upstream Toe of Dam or Excavated Bottom of "Wet Storage Area" (if excavation was performed) = 70.0

SEDIMENT BASIN SCHEMATIC ELEVATIONS

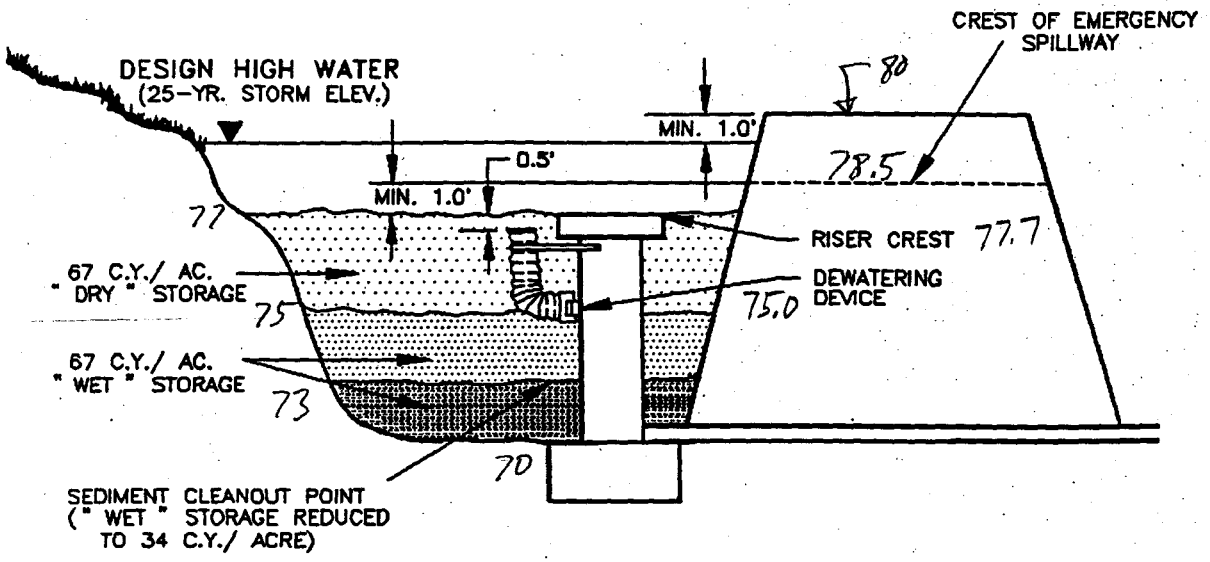

DESIGN ELEVATIONS WITH EMERGENCY SPILLWAY

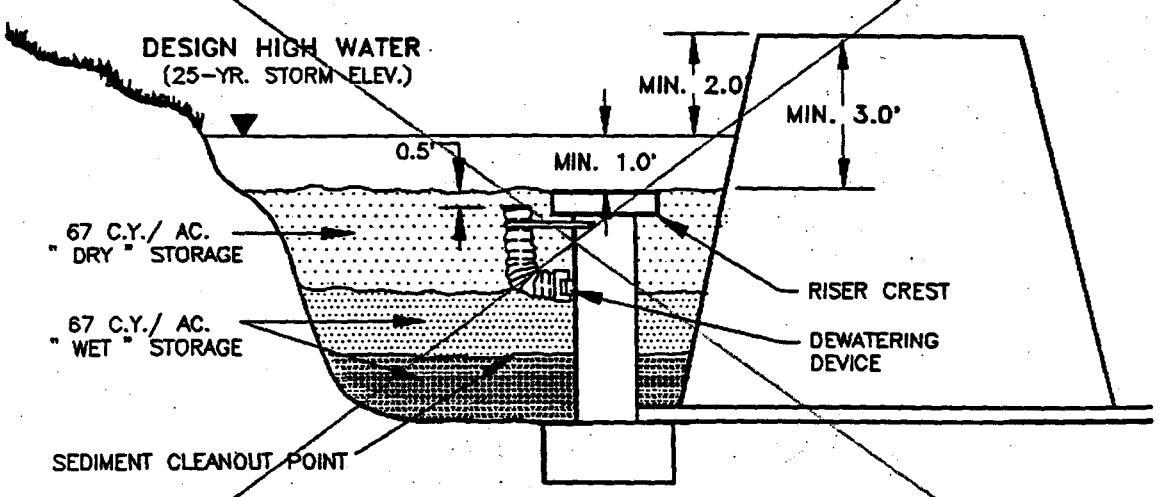

DESIGN ELEVATIONS WITHOUT EMERGENCY SPILLWAY
(RISER PASSES 25-YR. EVENT)

Source: Va. DSWC

Plate 3.14-2

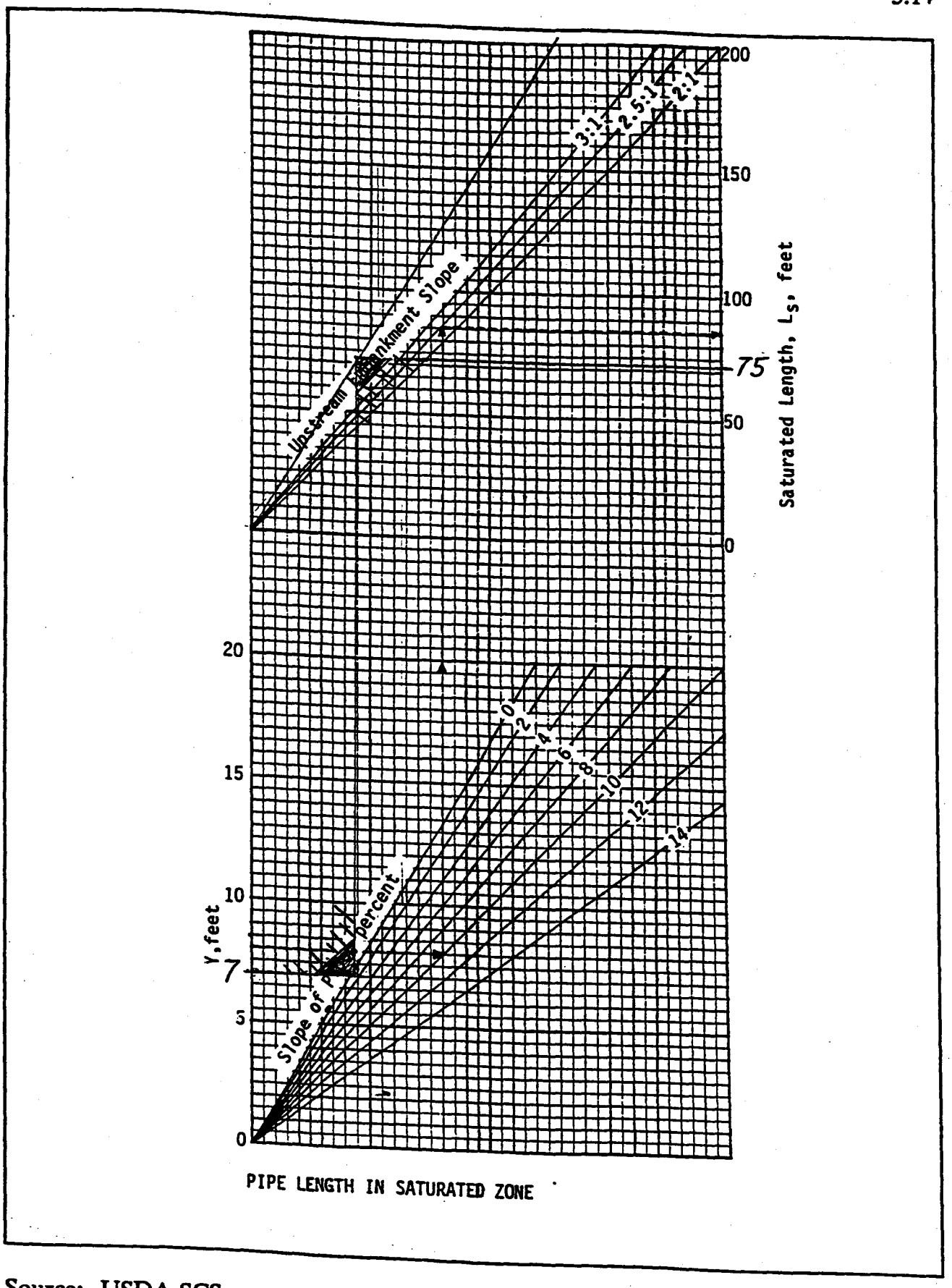

Source: USDA-SCS

Plate 3.14-11

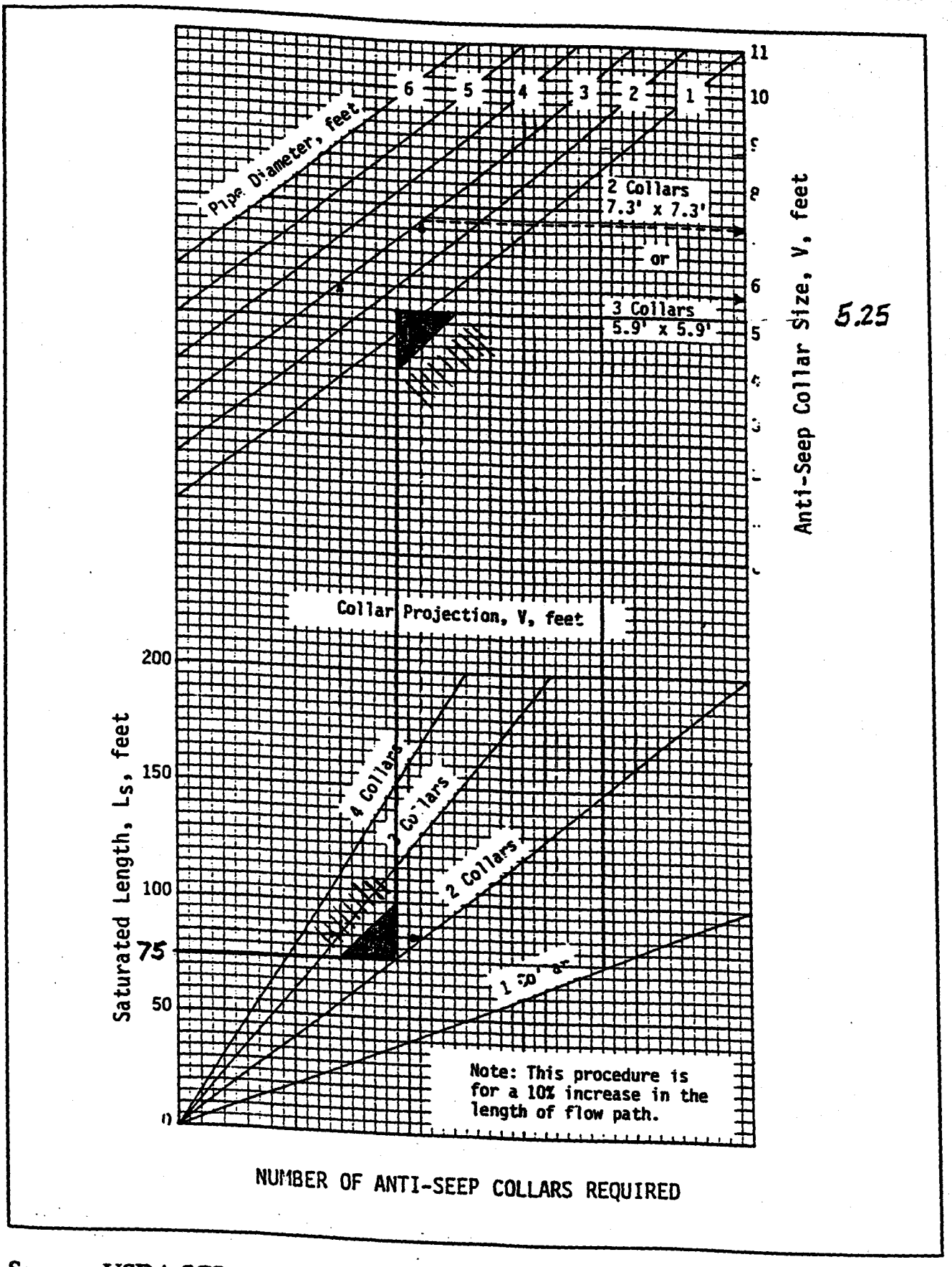

Source: USDA-SCS

Plate 3.14-12

Scott Thomas

From: Scott Thomas
Sent: Tuesday, August 31, 2004 5:08 PM
To: Michael Drewry
Subject: RE: Ironbound Village Answer

As discussed, it would be too difficult for me to give percentage of runoff, as runoff is variable between storm events (ie. 1-year, 2-year, 10-year, 100-year, etc.). I believe the best way to do this is by strict percentage of drainage area the BMP serves. In review of the entire case files for Ironbound Village Phase I (subdivision) and Phase II (site plan-commercial), the BMP serves a total postdevelopment drainage area of 6.89 acres (6.9 acres). This is the postdevelopment drainage area to the basin with all the grading and storm drainage system in place. The drainage area will not change, even if the configurations and cover conditions vary slightly.

On a percentage, you said the to-be-County owned parcels totals 1.39 acres, consisting of Parcels 1A (building to parking), 1B (building), 3 (building), 4 (building) and 2B (parking/road around building 3). This results in 1.39/6.9 = 20.14 percent. Therefore, about 20% of the total drainage area to the BMP will be County-owned.

This should be all that you need. If you have any questions let me know.

Scott J. Thomas, P.E.
James City County
Environmental Division

-----Original Message-----
From: Michael Drewry
Sent: Tuesday, August 31, 2004 9:41 AM
To: Scott Thomas
Subject: RE: Ironbound Village

Scott:

Let me know if I need to provide you with any detail. The reason for needing the percentage is that the owner of the commercial properties which will be JCC (Tax Parcels # 391100000(1A)(1B)(2B)(3) and (4) will share in upkeep of the stormwater retention basin in accordance with the percent of run-off from the commercial properties.

Thanks, Michael

-----Original Message-----
From: Scott Thomas
Sent: Monday, August 30, 2004 5:25 PM
To: Michael Drewry
Subject: RE: Ironbound Village

Yes, I should be able to give you a percentage. Let me look at the computations and get back to you.

Scott J. Thomas, P.E.
James City County
Environmental Division

Visit:
http://www.james-city.va.us/resources/devmgmt/div_devmgmt_environ.html
and
www.protectedwithpride.org

-----Original Message-----
From: Michael Drewry
Sent: Monday, August 30, 2004 5:00 PM

To: Scott Thomas
Subject: Ironbound Village

Scott:

I am putting together closing documents for the JCC purchase of the 5 commercial lots in the Ironbound Village subdivision. I need to know the percentage of run-off from the commercial versus remainder of project. I will need this percentage before end of the week. Can you assist with this calculation?

Thanks, Michael

Michael H. Drewry
Assistant County Attorney
101-C Mounts Bay Road
Williamsburg, Virginia 23187
Tel. # 757.253.6832
Fax # 757.253.6833

Impervious Area and Required Volume Calculations
for
Ironbound Village
AES# 8914-1

Impervious items	Totals		Acres
Houses	23 Ea	1350 SF	0.71
T.H.	7 Ea	912 SF	0.15
Office	4 Ea	2400 SF	0.22
Drveways	23 Ea	312 SF	0.16
Roads:			
Public	870 LF	31 Width	0.62
Private	530 LF	60 Width	0.73
Pond Access Rd	340 LF	12 Width	0.09
Wet Pond Surface @ N.P.	105 LF	65 Width	0.16
Sidewalks:			
w/in R/W	850 LF	8 Width	0.16
Offsite Road	500 LF	12 Width	0.14
		Total Impervious Area (TIA)	**3.14**

Area to Pond = 6.8 Acres

Percent Impervious = 46%

Pond's Required Wet Volume = (1")(ft/12")(TIA Ac)(43560 sf/Ac) = 11,390 c.f.

Pond's Required Dry Volume = (1")(ft/12")(TIA Ac)(43560 sf/Ac) = 11,390 c.f.

Sediment Forebay's Required Volume = (0.1")(ft/12")(TIA Ac)(43560 sf/Ac) = 1,139 c.f.

CC022

WORKSHEET FOR BMP POINT SYSTEM

TOTAL SITE AREA = 7.75 AC.

A. STRUCTURAL BMP POINT ALLOCATION

BMP	BMP Points		Fraction of Site Served	Weighted BMP Points
Wet Pond (E.D.)	10	x	(6.30+0.59) ÷ 7.75 =	8.89

TOTAL WEIGHTED STRUCTURAL BMP POINTS: 8.89

B. NATURAL OPEN SPACE CREDIT

Adjacent To Wetland	Natural Open Space Credit		Fraction of Site		Points for Natural Open Space
No	10	x	0.94 ÷ 7.75	=	1.21

C. TOTAL WEIGHTED POINTS

Structural BMP Points		Natural Open Space Points		Total
8.89	+	1.21	=	10.10

NOTES:

1) Natural open space has been placed in a conservation easement.

7.75) 5.00 (.61
4.65
.35

8.89
.61
9.50

James City County Environmental Division
Stormwater Management / BMP Inspection Report
Subsurface - Detention and Infiltration Facilities

County BMP ID Code (if known): _____

Name of Facility: Ironbound Village Phase I BMP No.: CC022 Date: 8/17/2007

Location: Northeast Cornor Ironbound and Magazine

Name of Owner: Cutting Edge Development, LLC

Name of Inspector: Gregory B Johnson

Type of Facility: Wet Pond

Weather Conditions: Sunny/Hot Type: ☒ Final Inspection ☐ County BMP Inspection Program ☐ Owners Inspection

If an inspection item is not applicable, mark NA, otherwise mark the appropriate column.

O.K. - The item checked is in adequate condition and the maintenance program is currently satisfactory. No action required.
Routine - The item checked requires attention, but does not present an immediate threat to the function/integrity of the BMP.
Urgent - The item checked requires immediate attention to keep the BMP operational and prevent damage to the facility.

Provide an explanation and details in the comment column, if routine or urgent are marked.

Facility Item	O.K.	Routine	Urgent	Comments
Accessibility:				
Roads	✓			
Parking Areas	✓			
Gates	NA			
Locks	NA			
Safety Fencing	NA			
Access Points:				
Trap Doors	NA			
Manholes/ Vaults	✓			
Grates	NA			
Observ Wells	NA			
Pretreatment Devices: ☐ Inlet ☐ Sump ☑ Forebay ☐ Other				
Sediment	✓			
Trash & Debris	✓			
Structure	✓			
Other	✓			

Facility Item	O.K.	Routine	Urgent	Comments
Primary Storage/ Infiltration Area Structure (Pipe, Stone, etc):				
Trash & Debris		✓		Trash located along bank of lower bay
Sediment	✓			
Ponding / Drawdown	✓			
Cracks	✓			
Joints	✓			
Seams	✓			
Coating	✓			
Aesthetics		✓		Grass needs cut upper slope
Other	NA			
Inlet Structure # 1 (Describe Location): Northeast Upper Corner				
Condition of Structure	✓			
Erosion	✓			
Trash and Debris		✓		Trash around base of structure
Sediment	✓			
Aesthetics	✓			
Other				
Inlet Structure # 2 (Describe Location):				
Condition of Structure				
Erosion				
Trash and Debris				
Sediment				
Aesthetics				
Other				
Inlet Structure # 3 (Describe Location):				
Condition of Structure				
Erosion				
Trash and Debris				
Sediment				
Aesthetics				
Other				
Outlet - Principal Overflow or Bypass Structure (Describe Location):				
Condition of Structure	✓			
Erosion	✓			
Trash and Debris	✓			
Sediment	✓			
Other				

Facility Item	O.K.	Routine	Urgent	Comments
Nusiance Type Conditions:				
Mosquito Breeding		✓		Water not flowing or moving
Animals, Rodents	✓			
Graffiti	✓			
Other				
Perimeter (Contributing Drainage Area) Conditions:				
Stabilization	✓			
Vegetation Condition	✓			
Trash and Debris		✓		Trash and debris located around perimeter
Aesthetics	✓			
Other				

Remarks:

Overall Environmental Division Internal Rating: _____

Signature: _____ **Date:** _____

Title: _____

SWMProg\BMP\CoInspProg\SubDetInfil.wpd

LANDMARK DESIGN GROUP

January 16, 2002

Mr. Scott Thomas, P.E.
James City County Environmental Division
P.O. Box 8784
Williamsburg, VA 23187-8784

JAN 2002 RECEIVED ENVIRONMENTAL DIVISION

Re: Ironbound Village Subdivision and Site Plan
Case Nos. S-36-01 and SP-29-01
LMDG Job No. 2001112-000.07

Dear Scott:

We are pleased to submit, for approval, two (2) copies of the revised pond routing calculations for the above referenced project. As previously discussed, Cutting Edge Development, L.L.C. has employed our firm to assist them in obtaining final approval for these projects. The information we are submitting to you is a supplement to the plans and calculations that were previously submitted by Cutting Edge's original consultant, AES Consulting Engineers.

As we discussed last month, the developer is concerned with maintenance of the outfall structure due to the riser being thirty-six (36) inches in diameter. We have revised the calculations, per our discussions, to show the effects of using a forty-eight (48) inch riser. The calculations show no detrimental rise in the pond due to the increase in riser diameter.

If any questions or comments should arise, please do not hesitate to contact us.

Best regards,
The LandMark Design Group Inc.

Charles J. Bodnar, P.E.
Project Manager

Enclosures

CJB/cb

Approval

Based on a review of supporting information received January 17th 2002, a request to change riser structure from 36-inch diameter concrete to 48-inch diameter concrete reviewed and found acceptable. This revision is considered a minor plan change, as based on our review of information, there is no considerable change in BMP hydraulics or layout and configuration. Riser shall be reinforced concrete pipe with O-ring gaskets meeting the requirements of ASTM C361 or ASTM C76 with gaskets meeting ASTM C443; or precast manhole meeting ASTM C478 with profile gaskets meeting ASTM C443. Anti-vortex/trash rack device size shall also change appropriately consistent with the riser size change and details as shown on the previously approved plan. Record drawings (as-builts) shall reflect final riser type and size used in the field.

Scott J. Thomas, P.E.
Civil Engineer
Environmental Division

1-23-02
Date

File: 2001112-000.07
Cutting Edge Development, L.L.C.

Engineers • Planners • Surveyors • Landscape Architects • Environmental Consultants
4029 Ironbound Road, Suite 100, Williamsburg, VA 23188 (757) 253-2975 FAX: (757) 229-0049 lmdg@landmarkdgwb.com

BMP VOLUME CALCULATIONS
for
STONEHOUSE Ph 1, Bent Tree (Sect. V-B) Ph3
AES Project No.: 8878-00

PROPOSED POND VOLUME

Eleva	Depth	Area (sq. ft.)	Incremental Volume (cu. ft.)	Sum Volume (cu. ft.)	Sum Volume (cu. yd.)	Volume Above NPE
70.0	0.0	1,094	0	0	0	
72.0	2.0	2,396	3,490	3,490	129	
73.7	1.7	4,303	5,694	9,184	340	
74.0	0.3	5,971	1,541	10,725	397	
75.0	1.0	6,918	6,445	17,170	636	0
76.0	1.0	7,865	7,392	24,561	910	7,391
77.0	1.0	8,926	8,396	32,957	1,221	15,787
78.0	1.0	9,986	9,456	42,413	1,571	25,243
78.5	0.5	10,684	5,168	47,580	1,762	30,410
80.0	1.5	12,776	17,595	65,175	2,414	48,005

RELEASE RATE REQUIRED TO DETAINED VOLUME FOR 24 HOURS

Required BMP Volume (based upon Impervious Area) = 11,390 cubic feet

Volume Provided (based upon above table) = 15,787 cubic feet

Elevation of water surface associated with provided volume = 77.0

Elevation of Low Flow Orifice = 75.0

Average Head, in feet = 1.0

Average Release Rate Calculation $\frac{15{,}787 \text{ cubic feet}}{(24 \text{ hours} \times 60 \text{ minutes/hour} \times 60 \text{ seconds/ minute})}$ = 0.2 cfs

LOW FLOW ORIFICE DIAMETER REQUIRED TO MAINTAIN AVERAGE RELEASE RATE

Diameter of Low Flow Orifice = 2 * (Q / ((64.32 * (h / 2)) ^ (1/2) * 0.6 * 3.14))) ^ (1/2)

where, Q equals average release rate (cfs), h equals average head (feet)

Diameter of Low Flow Orifice = 0.30 feet, or 4 inches

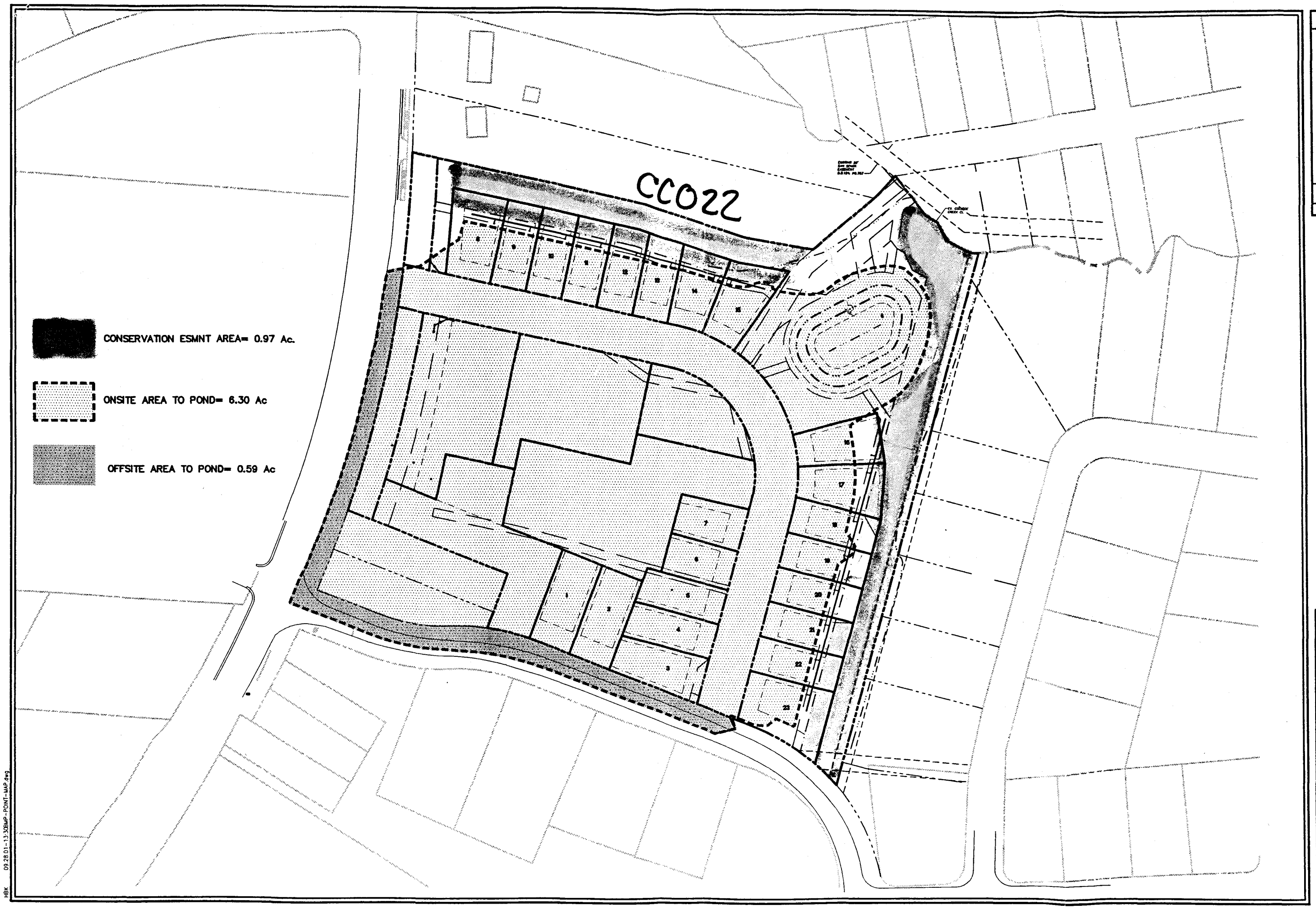

No	DATE	REVISION / COMMENT / NOTE	BY

5248 Olde Towne Road, Suite 1
Williamsburg, Virginia 23188
(757) 253-0040
Fax (757) 220-9994
CONSULTING ENGINEERS

BMP MAP

Designed	Drawn
AES	AES
Scale	Date
1"=1000'	6/19/01
Project No.	
8914-01	
Drawing No.	
1 OF 1	

HBK 09.28.01 - 13:30MP-POINT-MAP.dwg

LANDMARK DESIGN GROUP

January 16, 2002

Mr. Scott Thomas, P.E.
James City County Environmental Division
P.O. Box 8784
Williamsburg, VA 23187-8784

JAN 2002 RECEIVED ENVIRONMENTAL DIVISION

Re: Ironbound Village Subdivision and Site Plan
Case Nos. S-36-01 and SP-29-01
LMDG Job No. 2001112-000.07

Dear Scott:

We are pleased to submit, for approval, two (2) copies of the revised pond routing calculations for the above referenced project. As previously discussed, Cutting Edge Development, L.L.C. has employed our firm to assist them in obtaining final approval for these projects. The information we are submitting to you is a supplement to the plans and calculations that were previously submitted by Cutting Edge's original consultant, AES Consulting Engineers.

As we discussed last month, the developer is concerned with maintenance of the outfall structure due to the riser being thirty-six (36) inches in diameter. We have revised the calculations, per our discussions, to show the effects of using a forty-eight (48) inch riser. The calculations show no detrimental rise in the pond due to the increase in riser diameter.

If any questions or comments should arise, please do not hesitate to contact us.

Best regards,
The LandMark Design Group Inc.

Charles J. Bodnar, P.E.
Project Manager

Enclosures

CJB/cb

Approval

Based on a review of supporting information received January 17th 2002, a request to change riser structure from 36-inch diameter concrete to 48-inch diameter concrete reviewed and found acceptable. This revision is considered a minor plan change, as based on our review of information, there is no considerable change in BMP hydraulics or layout and configuration. Riser shall be reinforced concrete pipe with O-ring gaskets meeting the requirements of ASTM C361 or ASTM C76 with gaskets meeting ASTM C443; or precast manhole meeting ASTM C478 with profile gaskets meeting ASTM C443. Anti-vortex/trash rack device size shall also change appropriately consistent with the riser size change and details as shown on the previously approved plan. Record drawings (as-builts) shall reflect final riser type and size used in the field.

Scott J. Thomas, P.E.
Civil Engineer
Environmental Division

1-23-02
Date

File: 2001112-000.07
Cutting Edge Development, L.L.C.

Engineers • Planners • Surveyors • Landscape Architects • Environmental Consultants
4029 Ironbound Road, Suite 100, Williamsburg, VA 23188 (757) 253-2975 FAX: (757) 229-0049 lmdg@landmarkdgwb.com

OCT 2001
RECEIVED
PLANNING DEPARTMENT

IRONBOUND VILLAGE

FOR
CUTTING EDGE DEVELOPMENT, LLC.

AES PROJECT NUMBER: 8914-01

SWM POND, BMPs, SEDIMENT BASIN, AND POND BENCH LETTER

S-36-01
SP-29-01

COMMONWEALTH OF VIRGINIA
ROBERT G. WORNOM
No. 028138
10/3/01
PROFESSIONAL ENGINEER

CONSULTING ENGINEERS

FINAL COMPS

AES CONSULTING ENGINEERS
5248 OLDE TOWNE ROAD, SUITE #1
WILLIAMSBURG, VIRGINIA 23188

CONSULTING ENGINEERS

5248 Olde Towne Road • Suite 1 • Williamsburg, Virginia 23188
(757) 253-0040 • Fax (757) 220-8994 • E-mail aes@aesva.com

October 3, 2001

DARRYL,
I RAISED ISSUE ABOUT 6' WIDE BENCHES. Both are provided and I was not aware you discussed with them. However, I AM OK WITH THE REQUEST SUMIT

Send APPROVAL Letter

S-36-01
SP-29-01
Ironbound Village.

Mr. Scott J. Thomas, P.E.
James City County Environmental Division
101-E Mounts Bay Road
P.O. Box 8784
Williamsburg, VA 23187-8784

RE: Ironbound Village
Pond Benches
AES Project No. 8914-1

Dear Mr. Thomas:

This letter is in regard to the benches for the BMP/SWM pond. The JCC BMP manual states the following: "Where feasible based on topography, the perimeter of all deep pool areas (four feet or greater in depth) should be surrounded by two benches: A safety bench that extends 15 feet outward from the normal water edge to the toe of the pond side slope. The maximum slope of the safety bench shall be 6%. An aquatic bench that extends up to 15 feet inward from the normal shoreline and has a maximum depth of twelve inches below the normal pool water surface elevation."

The following conditions are being honored to preserve the intent of the manual. A 6-foot wide aquatic bench with a 5% slope has been provided per previous agreements with Darryl Cook.? A 6-foot wide intermediate safety bench with a 5% slope has been provided, and a 15-foot safety bench with a 2% slope has been provided between the top of the slope and the curb.

Should you have any questions or require additional information, please do not hesitate to contact me.

Sincerely,

AES Consulting Engineers

Robert G. Wornom, P.E.
Project Manager

S:\Jobs\8914\01-IBV\Wordproc\Document\89141L13-rgw.doc

JUL 2001
RECEIVED
PLANNING DEPARTMENT

IRONBOUND VILLAGE

FOR
CUTTING EDGE DEVELOPMENT, LLC.

AES PROJECT NUMBER: 8914-01

BMP & SWM POND, E&S CONTROL, AND DRAINAGE CACULATIONS

S-36-01 IRONBOUND VILLAGE PH I SUBDIV PLAN

SP-29-01 IRONBOUND VILLAGE PHASE II SITE PLAN

CONSULTING ENGINEERS

AES CONSULTING ENGINEERS
5248 OLDE TOWNE ROAD, SUITE #1
WILLIAMSBURG, VIRGINIA 23188

JULY 3, 2001

COMMONWEALTH OF VIRGINIA
ROBERT G. WORNOM
No. 028138
7/3/01
PROFESSIONAL ENGINEER

STREAM CHANNEL PROTECTION CALCULATIONS
for
Ironbound Village
AES Project No.: 8914-1

PROPOSED POND VOLUME

Eleva	Depth	Area (sq. ft.)	Incremental Volume (cu. ft.)	Sum Volume (cu. ft.)	Sum Volume (cu. yd.)	Volume Above NPE
70.0	0.0	1,094	0	0	0	
72.0	2.0	2,396	3,490	3,490	129	
73.7	1.7	4,303	5,694	9,184	340	
74.0	0.3	5,971	1,541	10,725	397	
75.0	1.0	6,918	6,445	17,170	636	0
76.0	1.0	7,865	7,392	24,561	910	7,391
77.0	1.0	8,926	8,395	32,957	1,221	15,787
78.0	1.0	9,986	9,456	42,412	1,571	25,242
78.5	0.5	10,684	5,168	47,580	1,762	30,410
80.0	1.5	12,776	17,595	65,175	2,414	48,005

RELEASE RATE REQUIRED TO DETAINED VOLUME FOR 24 HOURS

Required Volume based upon 1-Year, 24-Hour Storm Hydrograph = 14,939 cubic feet

Volume provided based upon above table = 15,787 cubic feet

Elevation of water surface associated with provided volume = 77.0 (75.87 per routing)

Elevation of Low Flow Orifice = 75.0

Average Head, in feet = 1.0

Average Release Rate Calculation $\frac{15{,}787 \text{ cubic feet}}{(24 \text{ hours} \times 60 \text{ minutes/hour} \times 60 \text{ seconds/ minute})}$ = 0.2 cfs

LOW FLOW ORIFICE DIAMETER REQUIRED TO MAINTAIN AVERAGE RELEASE RATE

Diameter of Low Flow Orifice = 2 * (Q / ((64.32 * (h / 2)) ^ (1/2) * 0.6 * 3.14))) ^ (1/2)

where, Q equals average release rate (cfs), h equals average head (feet)

Diameter of Low Flow Orifice = 0.30 feet, or 4 inches

A = 6.8 AC (0.01063 sq mi)
C = 0.55 ≈ CN = 79
Tc = 5 min. – 0.083 hrs.
Runoff 1.04 in
Peak 10.8 cfs
Ac + Runoff + 1'/12" = 0.59 AC-FT
Vol = 1.04 in + ft/12 in + 43560 SF + 6.8 AC
= 25,67 CF

TEMPORARY SEDIMENT BASIN DESIGN DATA SHEET

(with or without an emergency spillway)

Project IRONBOUND VILLAGE

Basin # _____ Location _____

Total area draining to basin: 6.9 acres.

Basin Volume Design

Wet Storage:

1. Minimum required volume = 67 cu. yds. x Total Drainage Area (acres).

   67 cu. yds. x 6.9 acres = 462 cu. yds.

2. Available basin volume = 636 cu. yds. at elevation 75. (From storage - elevation curve)

3. Excavate 636 cu. yds. to obtain required volume*.

   * Elevation corresponding to required volume = invert of the dewatering orifice.

4. Available volume before cleanout required.

   33 cu. yds. x 6.9 acres = 228 cu. yds.

5. Elevation corresponding to cleanout level = 73.

   (From Storage - Elevation Curve)

6. Distance from invert of the dewatering orifice to cleanout level = 2.0 ft. (Min. = 1.0 ft.)

Dry Storage:

7. Minimum required volume = 67 cu. yds. x Total Drainage Area (acres).

   67 cu. yds. x 6.9 acres = 462 cu. yds.

8. Total available basin volume at crest of riser* = 1,221 cu. yds. at elevation 77.0. (From Storage - Elevation Curve)

* Minimum = 134 cu. yds./acre of total drainage area.

9. Diameter of dewatering orifice = 4 in. $Q = \frac{(1221)(27)}{21600_s} = 1.53$ cfs

10. Diameter of flexible tubing = 6 in. (diameter of dewatering orifice plus 2 inches). $A = 1.53/\sqrt{2(64.32)(3/2)}\,(.6) = .09$ sf; $d = 0.34' = 4''$

Preliminary Design Elevations

11. Crest of Riser = 77.0

Top of Dam = 80.0

Design High Water = 77.5

Upstream Toe of Dam = 70

Basin Shape

12. Length of Flow / Effective Width — L / We = $\frac{70}{25} = 2.8$

If > 2, baffles are not required ✓

If < 2, baffles are required _____

Runoff

$Q = C_f \times A \times I \times C$

13. Q_2 = 12.6 cfs (From Chapter 5) (1.0)(6.9)(4.56)(0.40)

14. Q_{25} = 20.3 cfs (From Chapter 5) (1.1)(6.9)(6.67)(.40)

Principal Spillway Design

15. With emergency spillway, required spillway capacity $Q_p = Q_2$ = 12.6 cfs. (riser and barrel)

Without emergency spillway, required spillway capacity $Q_p = Q_{25}$ = N/A cfs. (riser and barrel)

16. With emergency spillway:

Assumed available head (h) = 1.5 ft. (Using Q_2)

h = Crest of Emergency Spillway Elevation - Crest of Riser Elevation

Without emergency spillway:

Assumed available head (h) = N/A ft. (Using Q_{25})

h = Design High Water Elevation - Crest of Riser Elevation

17. Riser diameter (D_r) = 36" in. Actual head (h) = 0.5 ft.

(From Plate 3.14-8.)

Note: Avoid orifice flow conditions.

18. Barrel length (l) = 100 ft.

Head (H) on barrel through embankment = 9.9 ft.

(From Plate 3.14-7).

19. Barrel diameter = 15 in.

(From Plate 3.14-B [concrete pipe] or Plate 3.14-A [corrugated pipe]).

20. Trash rack and anti-vortex device

(INSIDE) Diameter = 60 inches. 54 REQ'D

Height = 24 inches. 17 REQ'D

(From Table 3.14-D).

Emergency Spillway Design

20.3 - 12.6

21. Required spillway capacity Q_e = Q_{25} - Q_p = 7.7 cfs.

22. Bottom width (b) = 8.0 ft.; the slope of the exit channel (s) = .08 ft./foot; and the minimum length of the exit channel (x) = 36 ft.
(From Table 3.14-C).

Anti-Seep Collar Design

23. Depth of water at principal spillway crest (Y) = 7 ft.

Slope of upstream face of embankment (Z) = 6 :1.

Slope of principal spillway barrel (S_b) = 1.0 %

Length of barrel in saturated zone (L_s) = 75 ft.

24. Number of collars required = 2 dimensions = 5.25

(from Plate 3.14-12).

Final Design Elevations

25. Top of Dam = 80.0

Design High Water = 77.5

Emergency Spillway Crest = 78.5

Principal Spillway Crest = 77.0

Dewatering Orifice Invert = 75.0

Cleanout Elevation = 73.0

Elevation of Upstream Toe of Dam or Excavated Bottom of "Wet Storage Area" (if excavation was performed) = 70.0

SEDIMENT BASIN SCHEMATIC ELEVATIONS

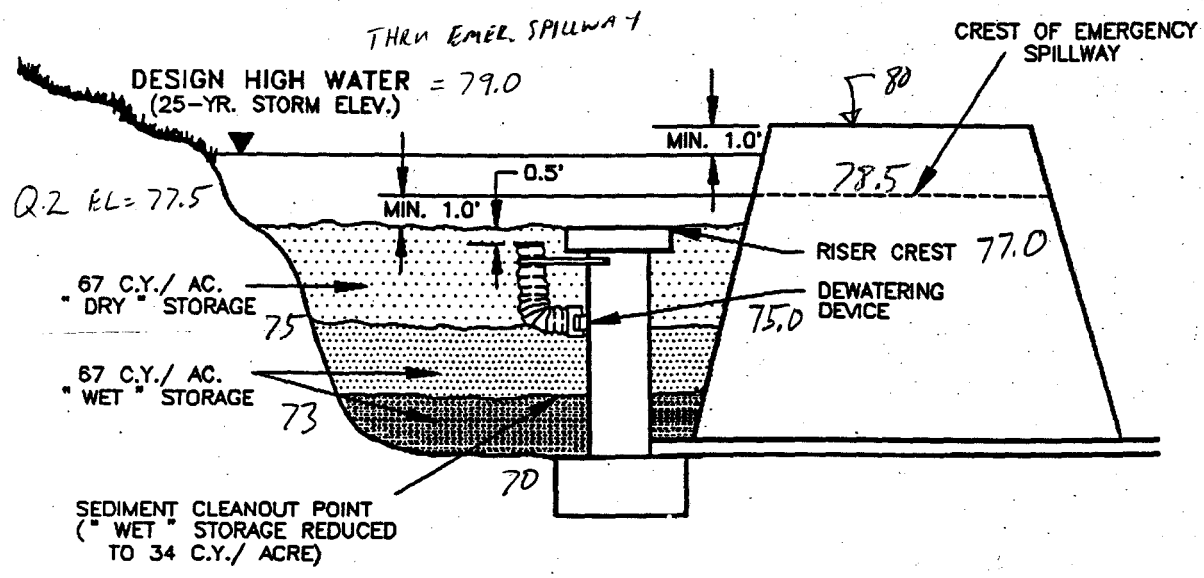

POND ROUTING:
2-YR WSE = 77.1
25-YR WSE = 77.6

DESIGN ELEVATIONS WITH EMERGENCY SPILLWAY

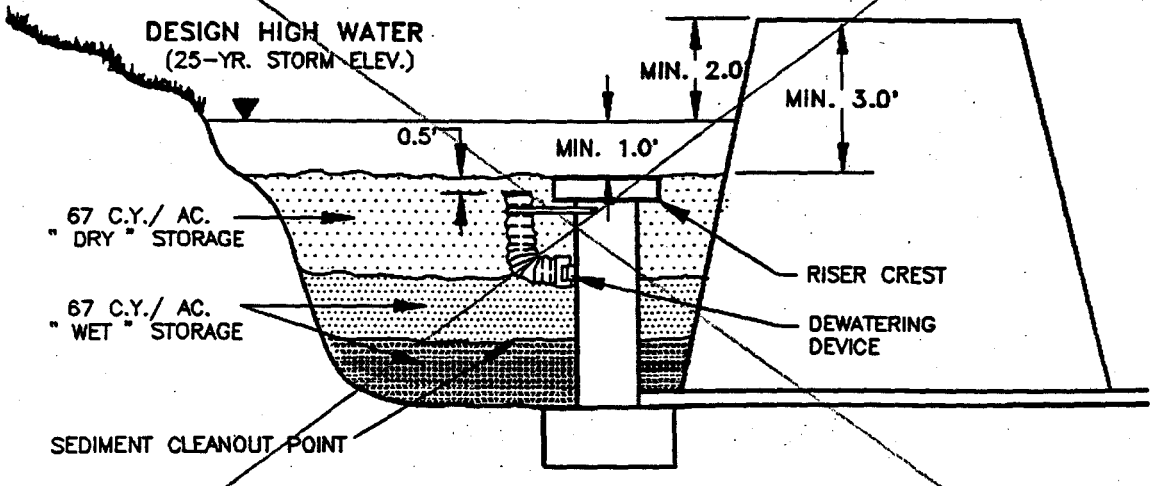

DESIGN ELEVATIONS WITHOUT EMERGENCY SPILLWAY

(RISER PASSES 25-YR. EVENT)

Source: Va. DSWC

Plate 3.14-2

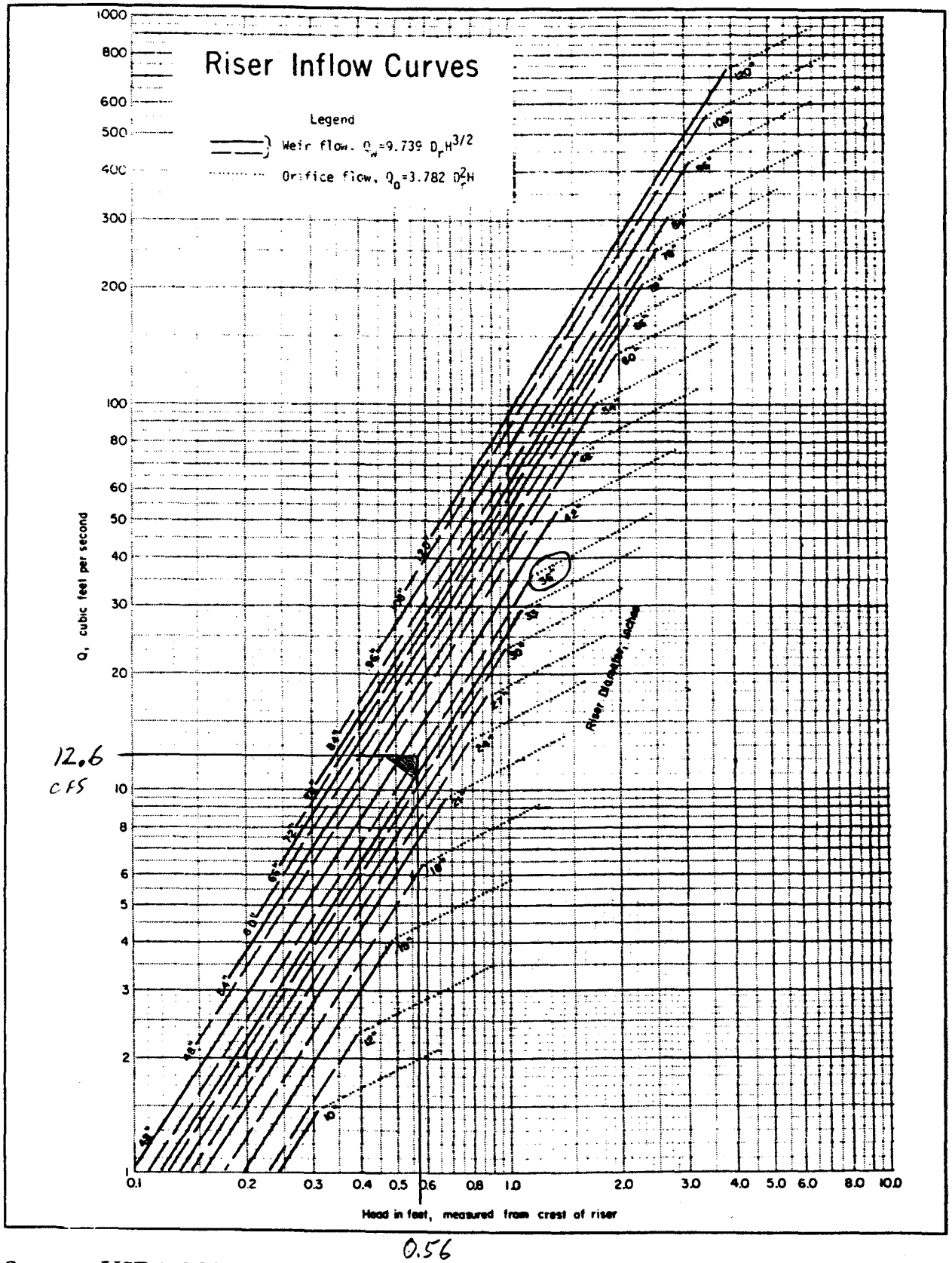

Source: USDA-SCS

Plate 3.14-8

TABLE 3.14-B
PIPE FLOW CHART, n = 0.013

FOR REINFORCED CONCRETE PIPE INLET $K_m = K_e + K_b = 0.65$ AND 70 FEET OF REINFORCED CONCRETE PIPE CONDUIT (full flow assumed)

Note correction factors for pipe lengths other than 70 feet

diameter of pipe in inches

H, in feet	12"	15"	18"	21"	24"	30"	36"	42"	48"	54"	60"	66"	72"	78"	84"	90"	96"	102"
1	3.22	5.44	8.29	11.8	15.9	26.0	38.6	53.8	71.4	91.5	114	139	167	197	229	264	302	342
2	4.55	7.69	11.7	16.7	22.5	36.8	54.6	76.0	101	129	161	197	236	278	324	374	427	483
3	5.57	9.42	14.4	20.4	27.5	45.0	66.9	93.1	124	159	198	241	289	341	397	458	523	592
4	6.43	10.9	16.6	23.5	31.8	52.0	77.3	108	143	183	228	278	334	394	459	529	604	683
5	7.19	12.2	18.5	26.3	35.5	58.1	86.4	120	160	205	255	311	373	440	513	591	675	764
6	7.88	13.3	20.3	28.8	38.9	63.7	94.6	132	175	224	280	341	409	482	562	647	739	837
7	8.51	14.4	21.9	31.1	42.0	68.8	102	142	189	242	302	368	441	521	607	699	798	904
8	9.10	15.4	23.5	33.3	44.9	73.5	109	152	202	259	323	394	472	557	685	748	854	966
9	9.65	16.3	24.9	35.3	47.7	78.0	116	161	214	275	342	418	500	590	688	793	905	1025
10	10.2	17.2	26.2	37.2	50.2	82.2	122	170	226	289	361	440	527	622	725	836	954	1080
11	10.7	18.0	27.5	39.0	52.7	86.2	128	178	237	304	379	462	553	653	761	877	1001	1133
12	11.1	18.9	28.7	40.8	55.0	90.1	134	186	247	317	395	482	578	682	794	916	1045	1184
13	11.6	19.6	29.9	42.4	57.3	93.7	139	194	257	330	411	502	601	710	827	953	1088	1232
14	12.0	20.4	31.0	44.1	59.4	97.3	145	201	267	342	427	521	624	736	858	989	1129	1278
15	12.5	21.1	32.1	45.6	61.5	101	150	208	277	354	442	539	646	762	888	1024	1169	1323
16	12.9	21.8	33.2	47.1	63.5	104	155	215	286	366	457	557	667	787	917	1057	1207	1367
17	13.3	22.4	34.2	48.5	65.5	107	159	222	294	377	471	574	688	812	946	1090	1244	1409
18	13.7	23.1	35.2	49.9	67.4	110	164	228	303	388	484	591	708	835	973	1121	1280	1450
19	14.0	23.7	36.1	51.3	69.2	113	168	234	311	399	497	607	727	858	1000	1152	1315	1489
20	14.4	24.3	37.1	52.6	71.0	116	173	240	319	409	510	623	746	880	1026	1182	1350	1528
21	14.7	24.9	38.0	53.9	72.8	119	177	246	327	419	523	638	764	902	1051	1211	1383	1566
22	15.1	25.5	38.9	55.2	74.5	122	181	252	335	429	535	653	782	923	1076	1240	1415	1603
23	15.4	26.1	39.8	56.5	76.2	125	186	258	342	439	547	668	800	944	1100	1268	1447	1639
24	15.8	26.7	40.6	57.7	77.8	127	189	263	350	448	559	682	817	964	1123	1295	1478	1674
25	16.1	27.2	41.5	58.9	79.4	130	193	269	357	458	571	696	834	984	1147	1322	1509	1708
26	16.4	27.7	42.3	60.0	81.0	133	197	274	364	467	582	710	850	1004	1169	1348	1539	1742
27	16.7	28.3	43.1	61.2	82.5	135	201	279	371	476	593	723	867	1023	1192	1373	1568	1775
28	17.0	28.8	43.9	62.3	84.1	138	204	285	378	484	604	737	883	1041	1214	1399	1597	1808
29	17.3	29.3	44.7	63.4	85.5	140	208	290	384	493	615	750	898	1060	1235	1423	1625	1840
30	17.6	29.8	45.4	64.5	87.0	142	212	294	391	501	625	763	913	1078	1256	1448	1653	1871
L, in feet	Correction Factors For Other Pipe Lengths																	
20	1.30	1.24	1.21	1.18	1.15	1.12	1.10	1.08	1.07	1.06	1.05	1.05	1.04	1.04	1.03	1.03	1.03	1.03
30	1.22	1.18	1.15	1.13	1.12	1.09	1.08	1.06	1.05	1.05	1.04	1.04	1.03	1.03	1.03	1.02	1.02	1.02
40	1.15	1.13	1.11	1.10	1.08	1.07	1.05	1.05	1.04	1.03	1.03	1.03	1.02	1.02	1.02	1.02	1.02	1.02
50	1.09	1.08	1.07	1.06	1.05	1.04	1.04	1.03	1.03	1.02	1.02	1.02	1.02	1.01	1.01	1.01	1.01	1.01
60	1.04	1.04	1.03	1.03	1.03	1.02	1.02	1.02	1.01	1.01	1.01	1.01	1.01	1.01	1.01	1.01	1.01	1.01
70	1.00	1.00	1.00	1.00	1.00	1.00	1.00	1.00	1.00	1.00	1.00	1.00	1.00	1.00	1.00	1.00	1.00	1.00
80	.96	.97	.97	.97	.98	.98	.98	.99	.99	.99	.99	.99	.99	.99	.99	.99	.99	.99
90	.93	.94	.94	.95	.95	.96	.97	.97	.98	.98	.98	.98	.98	.99	.99	.99	.99	.99
100	.90	.91	.92	.93	.93	.95	.95	.96	.97	.97	.97	.98	.98	.98	.98	.98	.98	.99
120	.84	.86	.87	.89	.90	.91	.93	.94	.94	.95	.96	.96	.96	.97	.97	.97	.97	.98
140	.80	.82	.83	.85	.86	.88	.90	.91	.92	.93	.94	.94	.95	.95	.96	.96	.96	.97
160	.76	.78	.80	.82	.83	.86	.88	.89	.90	.91	.92	.93	.94	.94	.95	.95	.95	.96

Source: USDA-SCS

TABLE 3.14-C

DESIGN DATA FOR EARTH SPILLWAYS

STAGE (Hp) IN FEET	SPILLWAY VARIABLES	BOTTOM WIDTH (b) IN FEET																
		8	10	12	14	16	18	20	22	24	26	28	30	32	34	36	38	40
0.5	Q	6	7	8	10	11	13	14	15	17	18	20	21	22	24	25	27	28
	V	2.7	2.7	2.7	2.7	2.7	2.7	2.7	2.7	2.7	2.7	2.7	2.7	2.7	2.7	2.7	2.7	2.7
	S	3.9	3.9	3.9	3.9	3.8	3.8	3.8	3.8	3.8	3.8	3.8	3.8	3.8	3.8	3.8	3.8	3.8
	X	32	33	33	33	33	33	33	33	33	33	33	33	33	33	33	33	33
0.6	Q	8	10	12	14	16	18	20	22	24	26	28	30	32	34	35	37	39
	V	3.0	3.0	3.0	3.0	3.0	3.0	3.0	3.0	3.0	3.0	3.0	3.0	3.0	3.0	3.0	3.0	3.0
	S	3.7	3.7	3.7	3.7	3.6	3.7	3.6	3.6	3.6	3.6	3.6	3.6	3.6	3.6	3.6	3.6	3.6
	X	36	36	36	36	36	36	37	37	37	37	37	37	37	37	37	37	37
0.7	Q	11	13	16	18	20	23	25	28	30	33	35	38	41	43	44	46	48
	V	3.2	3.2	3.3	3.3	3.3	3.3	3.3	3.3	3.3	3.3	3.3	3.3	3.3	3.3	3.3	3.3	3.3
	S	3.5	3.5	3.4	3.4	3.4	3.4	3.4	3.4	3.4	3.4	3.4	3.4	3.4	3.4	3.4	3.4	3.4
	X	39	40	40	40	41	41	41	41	41	41	41	41	41	41	41	41	41
0.8	Q	13	16	19	22	26	29	32	35	38	42	45	46	48	51	54	57	60
	V	3.5	3.5	3.5	3.6	3.6	3.6	3.6	3.6	3.6	3.6	3.6	3.6	3.6	3.6	3.6	3.6	3.6
	S	3.3	3.3	3.3	3.2	3.2	3.2	3.2	3.2	3.2	3.2	3.2	3.2	3.2	3.2	3.2	3.2	3.2
	X	44	44	44	44	45	45	45	45	45	45	45	45	45	45	45	45	45
0.9	Q	17	20	24	28	32	35	39	43	47	51	53	57	60	64	68	71	75
	V	3.7	3.8	3.8	3.8	3.8	3.8	3.8	3.8	3.8	3.8	3.8	3.8	3.8	3.8	3.8	3.8	3.8
	S	3.2	3.1	3.1	3.1	3.1	3.1	3.1	3.1	3.1	3.1	3.1	3.1	3.1	3.1	3.1	3.1	3.1
	X	47	47	48	48	48	48	48	48	48	48	49	49	49	49	49	49	49
1.0	Q	20	24	29	33	38	42	47	51	56	61	63	68	72	77	81	86	90
	V	4.0	4.0	4.0	4.0	4.0	4.0	4.0	4.0	4.0	4.0	4.0	4.0	4.0	4.0	4.0	4.0	4.0
	S	3.1	3.0	3.0	3.0	3.0	3.0	3.0	3.0	3.0	3.0	3.0	3.0	3.0	3.0	3.0	3.0	3.0
	X	51	51	51	51	52	52	52	52	52	52	52	52	52	52	52	52	52
1.1	Q	23	28	34	39	44	49	54	60	65	70	74	79	84	89	95	100	105
	V	4.2	4.2	4.2	4.3	4.3	4.3	4.3	4.3	4.3	4.3	4.3	4.3	4.3	4.3	4.3	4.3	4.3
	S	2.9	2.9	2.9	2.9	2.9	2.9	2.9	2.9	2.9	2.8	2.8	2.8	2.8	2.8	2.8	2.8	2.8
	X	55	55	55	55	55	55	55	56	56	56	56	56	56	56	56	56	56
1.2	Q	28	33	40	45	51	58	64	69	76	80	86	92	98	104	110	116	122
	V	4.4	4.4	4.4	4.4	4.4	4.5	4.5	4.5	4.5	4.5	4.5	4.5	4.5	4.5	4.5	4.5	4.5
	S	2.9	2.9	2.8	2.8	2.8	2.8	2.8	2.8	2.8	2.8	2.8	2.8	2.8	2.8	2.8	2.8	2.8
	X	58	58	59	59	59	59	59	59	60	60	60	60	60	60	60	60	60
1.3	Q	32	38	46	53	58	65	73	80	86	91	99	106	112	119	125	133	140
	V	4.5	4.6	4.6	4.6	4.6	4.6	4.7	4.7	4.7	4.7	4.7	4.7	4.7	4.7	4.7	4.7	4.7
	S	2.8	2.8	2.8	2.7	2.7	2.7	2.7	2.7	2.7	2.7	2.7	2.7	2.7	2.7	2.7	2.7	2.7
	X	62	62	62	63	63	63	63	63	63	63	63	64	64	64	64	64	64
1.4	Q	37	44	51	59	66	74	82	90	96	103	111	119	127	134	142	150	158
	V	4.7	4.8	4.8	4.8	4.8	4.8	4.8	4.8	4.8	4.9	4.9	4.9	4.9	4.9	4.9	4.9	4.9
	S	2.8	2.7	2.7	2.7	2.7	2.7	2.7	2.6	2.6	2.6	2.6	2.6	2.6	2.6	2.6	2.6	2.6
	X	65	66	66	66	66	67	67	67	67	67	67	68	68	68	68	68	69
1.5	Q	41	50	58	66	75	85	92	101	108	116	125	133	142	150	160	169	178
	V	4.8	4.9	4.9	5.0	5.0	5.0	5.0	5.0	5.0	5.0	5.0	5.0	5.0	5.0	5.1	5.1	5.1
	S	2.7	2.7	2.6	2.6	2.6	2.6	2.6	2.6	2.6	2.6	2.6	2.6	2.6	2.6	2.5	2.5	2.5
	X	69	69	70	70	71	71	71	71	71	71	71	72	72	72	72	72	72
1.6	Q	46	56	65	75	84	94	104	112	122	132	142	149	158	168	178	187	197
	V	5.0	5.1	5.1	5.1	5.1	5.2	5.2	5.2	5.2	5.2	5.2	5.2	5.2	5.2	5.2	5.2	5.2
	S	2.6	2.6	2.6	2.6	2.5	2.5	2.5	2.5	2.5	2.5	2.5	2.5	2.5	2.5	2.5	2.5	2.5
	X	72	74	74	75	75	76	76	76	76	76	76	76	76	76	76	76	76
1.7	Q	52	62	72	83	94	105	115	126	135	145	156	167	175	187	196	206	217
	V	5.2	5.2	5.2	5.3	5.3	5.3	5.3	5.4	5.4	5.4	5.4	5.4	5.4	5.4	5.4	5.4	5.4
	S	2.6	2.6	2.5	2.5	2.5	2.5	2.5	2.5	2.5	2.5	2.5	2.5	2.5	2.5	2.5	2.5	2.5
	X	76	78	79	80	80	80	80	80	80	80	80	80	80	80	80	80	80
1.8	Q	58	69	81	93	104	116	127	138	150	160	171	182	194	204	214	226	233
	V	5.3	5.4	5.4	5.5	5.5	5.5	5.5	5.5	5.5	5.5	5.5	5.6	5.6	5.6	5.6	5.6	5.6
	S	2.5	2.5	2.5	2.5	2.4	2.4	2.4	2.4	2.4	2.4	2.4	2.4	2.4	2.4	2.4	2.4	2.4
	X	80	82	83	84	84	84	84	84	84	84	84	84	84	84	84	84	84
1.9	Q	64	76	88	102	114	127	140	152	164	175	188	201	213	225	235	248	260
	V	5.5	5.5	5.5	5.6	5.6	5.6	5.7	5.7	5.7	5.7	5.7	5.7	5.7	5.7	5.7	5.7	5.7
	S	2.5	2.5	2.5	2.4	2.4	2.4	2.4	2.4	2.4	2.4	2.4	2.4	2.4	2.4	2.4	2.4	2.4
	X	84	85	86	87	88	88	88	88	88	88	88	88	88	88	88	88	88
2.0	Q	71	83	97	111	125	138	153	164	178	193	204	218	232	245	256	269	283
	V	5.6	5.7	5.7	5.7	5.8	5.8	5.8	5.8	5.8	5.8	5.8	5.9	5.9	5.9	5.9	5.9	5.9
	S	2.5	2.4	2.4	2.4	2.4	2.4	2.4	2.4	2.3	2.3	2.3	2.3	2.3	2.3	2.3	2.3	2.3
	X	88	90	91	91	91	91	92	92	92	92	92	92	92	92	92	92	92
2.1	Q	77	91	107	122	135	149	162	177	192	207	220	234	250	267	276	291	305
	V	5.7	5.8	5.9	5.9	5.9	5.9	5.9	6.0	6.0	6.0	6.0	6.0	6.0	6.0	6.0	6.0	6.0
	S	2.4	2.4	2.4	2.4	2.4	2.3	2.3	2.3	2.3	2.3	2.3	2.3	2.3	2.3	2.3	2.3	2.3
	X	92	93	95	95	95	95	95	95	95	96	96	96	96	96	96	96	96
2.2	Q	84	100	116	131	146	163	177	194	210	224	238	253	269	288	301	314	330
	V	5.9	5.9	6.0	6.0	6.0	6.1	6.1	6.1	6.1	6.1	6.1	6.1	6.1	6.2	6.2	6.2	6.2
	S	2.4	2.4	2.4	2.3	2.3	2.3	2.3	2.3	2.3	2.3	2.3	2.3	2.3	2.3	2.3	2.3	2.3
	X	96	98	99	99	99	99	99	100	100	100	100	100	100	100	100	100	100
2.3	Q	90	108	124	140	158	175	193	208	226	243	258	275	292	306	323	341	354
	V	6.0	6.1	6.1	6.1	6.2	6.2	6.2	6.2	6.3	6.3	6.3	6.3	6.3	6.3	6.3	6.3	6.3
	S	2.4	2.4	2.3	2.3	2.3	2.3	2.3	2.3	2.2	2.2	2.2	2.2	2.2	2.2	2.2	2.2	2.2
	X	100	102	102	103	103	103	104	104	104	105	105	105	105	105	105	105	105
2.4	Q	99	116	136	152	170	189	206	224	241	260	275	294	312	327	346	364	378
	V	6.1	6.2	6.2	6.3	6.3	6.3	6.4	6.4	6.4	6.4	6.4	6.4	6.4	6.4	6.4	6.4	6.4
	S	2.3	2.3	2.3	2.3	2.3	2.2	2.2	2.2	2.2	2.2	2.2	2.2	2.2	2.2	2.2	2.2	2.2
	X	105	105	106	107	107	108	108	108	108	109	109	109	109	109	109	109	109

Source: USDA-SCS

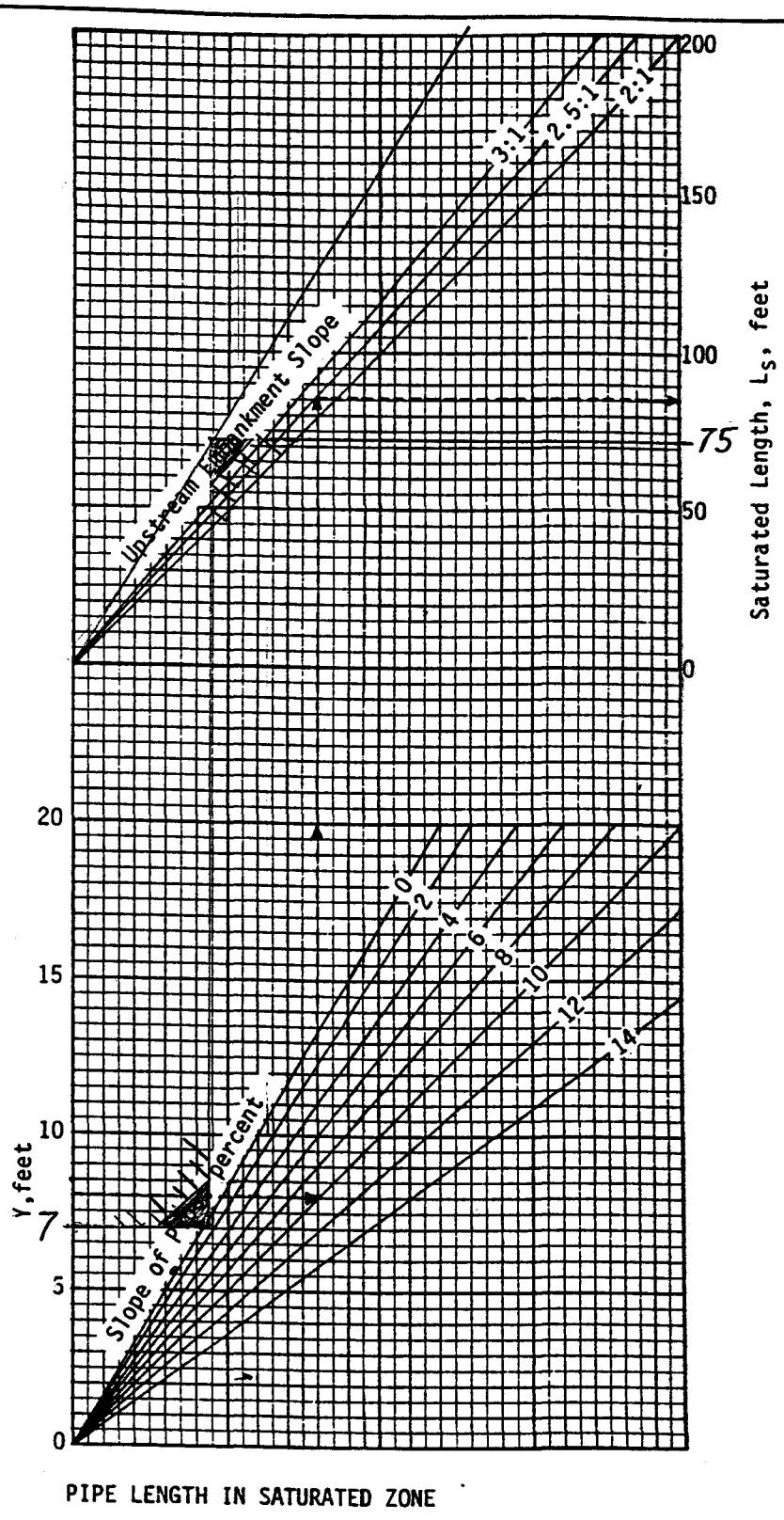

Source: USDA-SCS

Plate 3.14-11

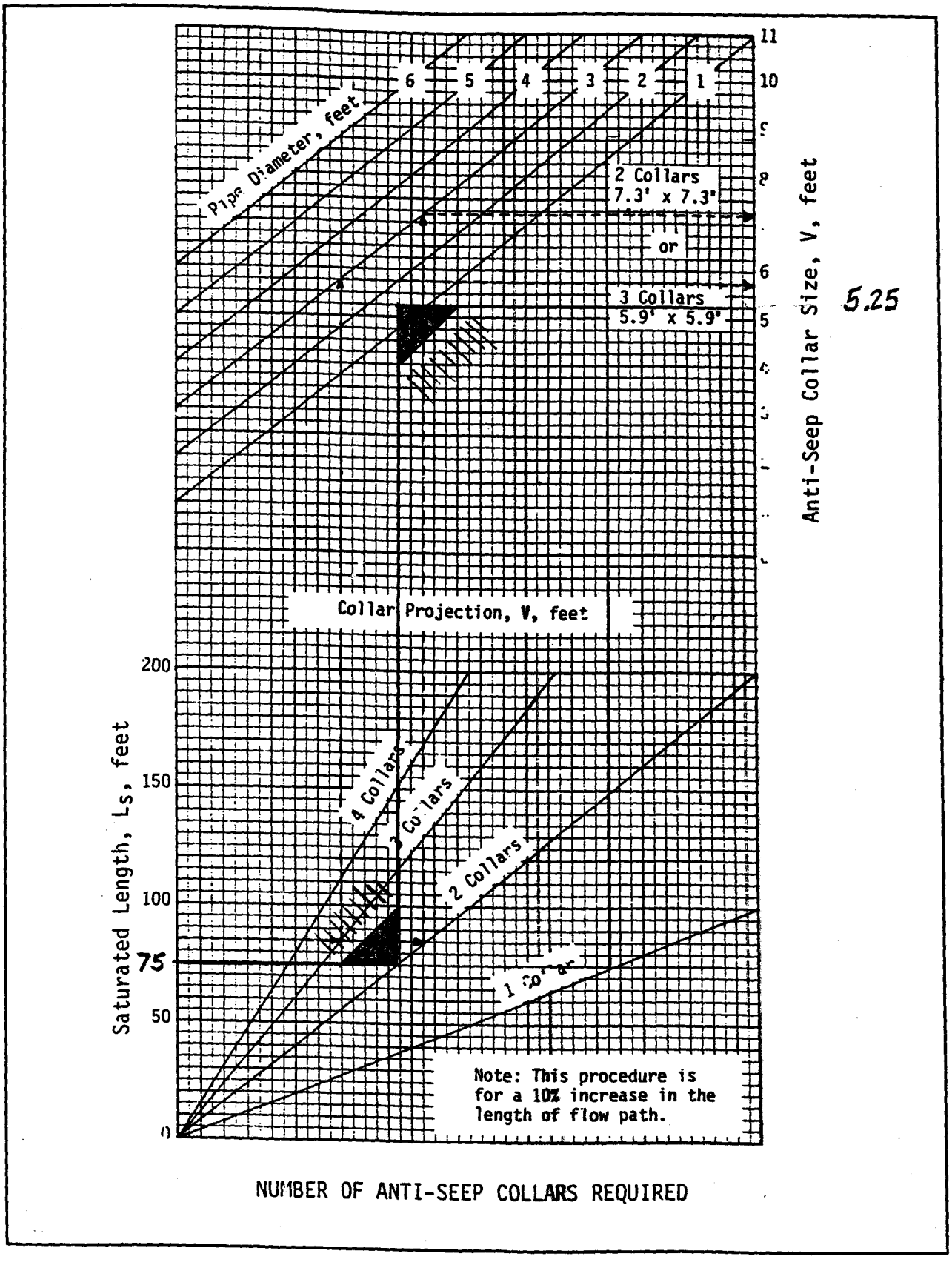

Source: USDA-SCS

Plate 3.14-12

Hydrograph Summary Report

Hyd. No.	Hydrograph type (origin)	Peak flow (cfs)	Time interval (min)	Time to peak (min)	Volume (cuft)	Return period (yrs)	Inflow hyd(s)	Maximum elevation (ft)	Maximum storage (cuft)	Hydrograph description
1	Rational	7.8	1	5	2,922	2	—	—	—	2yr Pre
2	Rational	10.0	1	5	3,768	10	—	—	—	10yr Pre
3	Rational	13.0	1	5	4,858	100	—	—	—	100yr Pre
5	Rational	18.2	1	5	6,830	1	—	—	—	1yr Post
6	Rational	21.0	1	5	7,864	2	—	—	—	2yr Post
7	Rational	27.0	1	5	10,141	10	—	—	—	10yr Post
8	Rational	34.9	1	5	13,074	100	—	—	—	100yr Post
10	Reservoir	0.4	1	12	6,406	1	5	75.87	23,584	1yr routing
11	Reservoir	0.4	1	12	7,385	2	6	76.00	24,561	2yr routing
12	Reservoir	0.4	1	12	9,538	10	7	76.26	26,718	10yr routing
13	Reservoir	0.5	1	12	12,312	100	8	76.59 DHW	29,503	100yr routing

Proj. file: Pond.gpw | IDF file: JCChydrographs.IDF | Run date: 06-21-2001

Hydrograph Plot

English

Hyd. No. 10

1yr routing

Hydrograph type	= Reservoir	Peak discharge	= 0.35 cfs
Storm frequency	= 1 yrs	Time interval	= 1 min
Inflow hyd. No.	= 5	Reservoir name	= pond1
Max. Elevation	= 75.87 ft	Max. Storage	= 23,584 cuft

Storage Indication method used.

Total Volume = 6,406 cuft

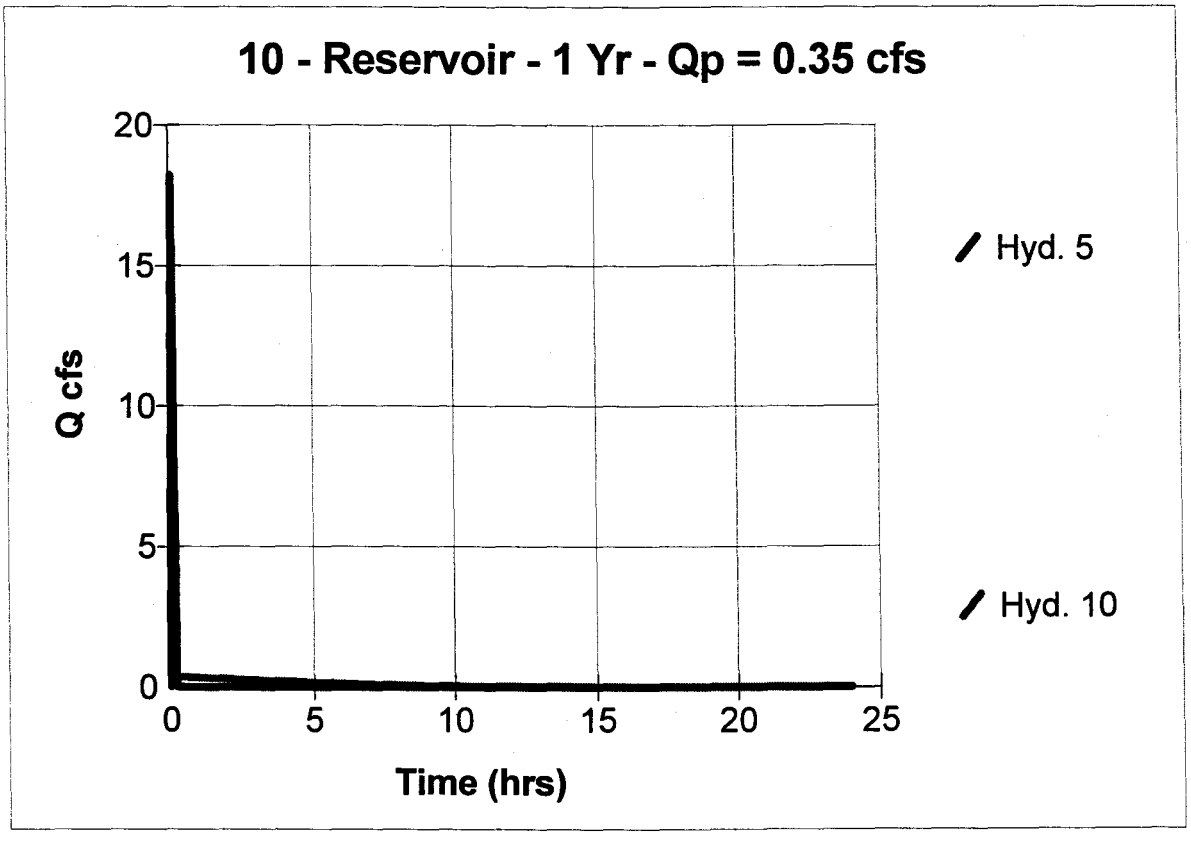

Routed 1-YR

Hydrograph Plot

English

Hyd. No. 11

2yr routing

Hydrograph type	= Reservoir	Peak discharge	= 0.38 cfs
Storm frequency	= 2 yrs	Time interval	= 1 min
Inflow hyd. No.	= 6	Reservoir name	= pond1
Max. Elevation	= 76.00 ft	Max. Storage	= 24,561 cuft

Storage Indication method used.

Total Volume = 7,385 cuft

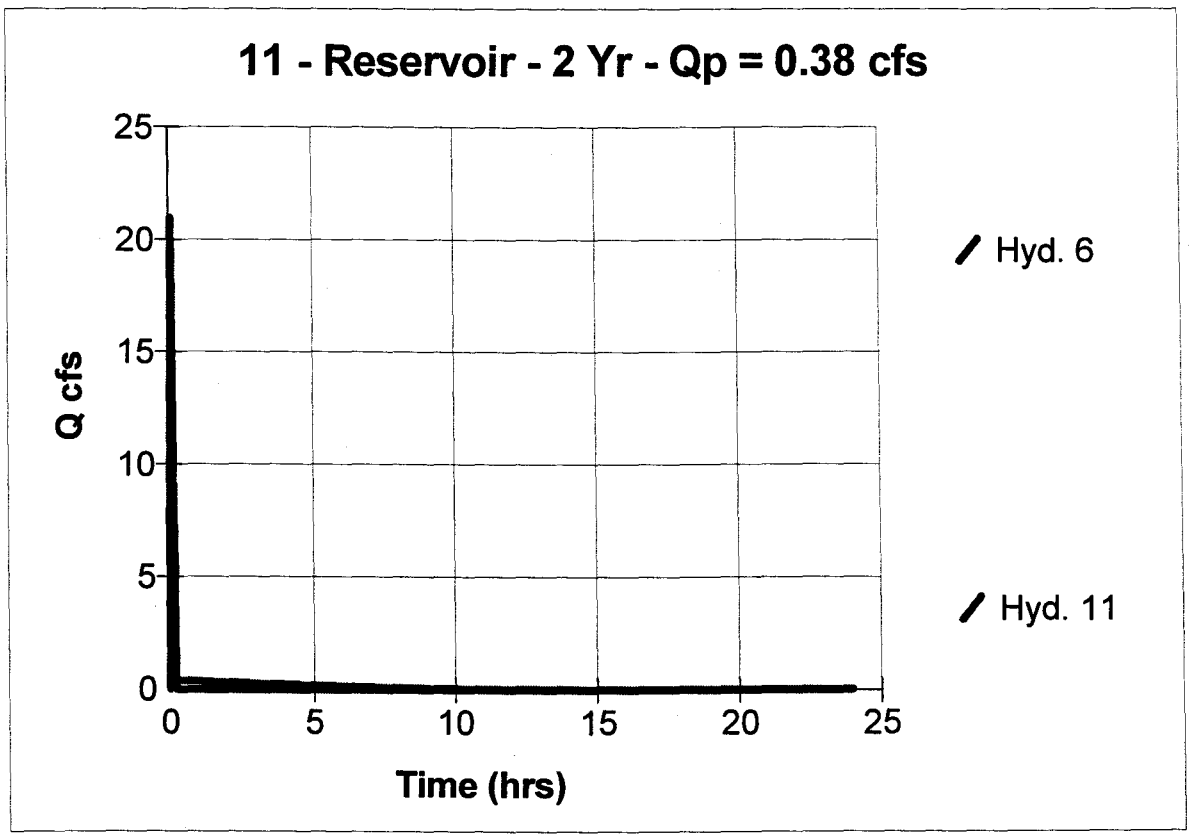

Routed 2-Year

Hydrograph Plot

English

Hyd. No. 12

10yr routing

Hydrograph type	= Reservoir	Peak discharge	= 0.44 cfs
Storm frequency	= 10 yrs	Time interval	= 1 min
Inflow hyd. No.	= 7	Reservoir name	= pond1
Max. Elevation	= 76.26 ft	Max. Storage	= 26,718 cuft

Storage Indication method used.

Total Volume = 9,538 cuft

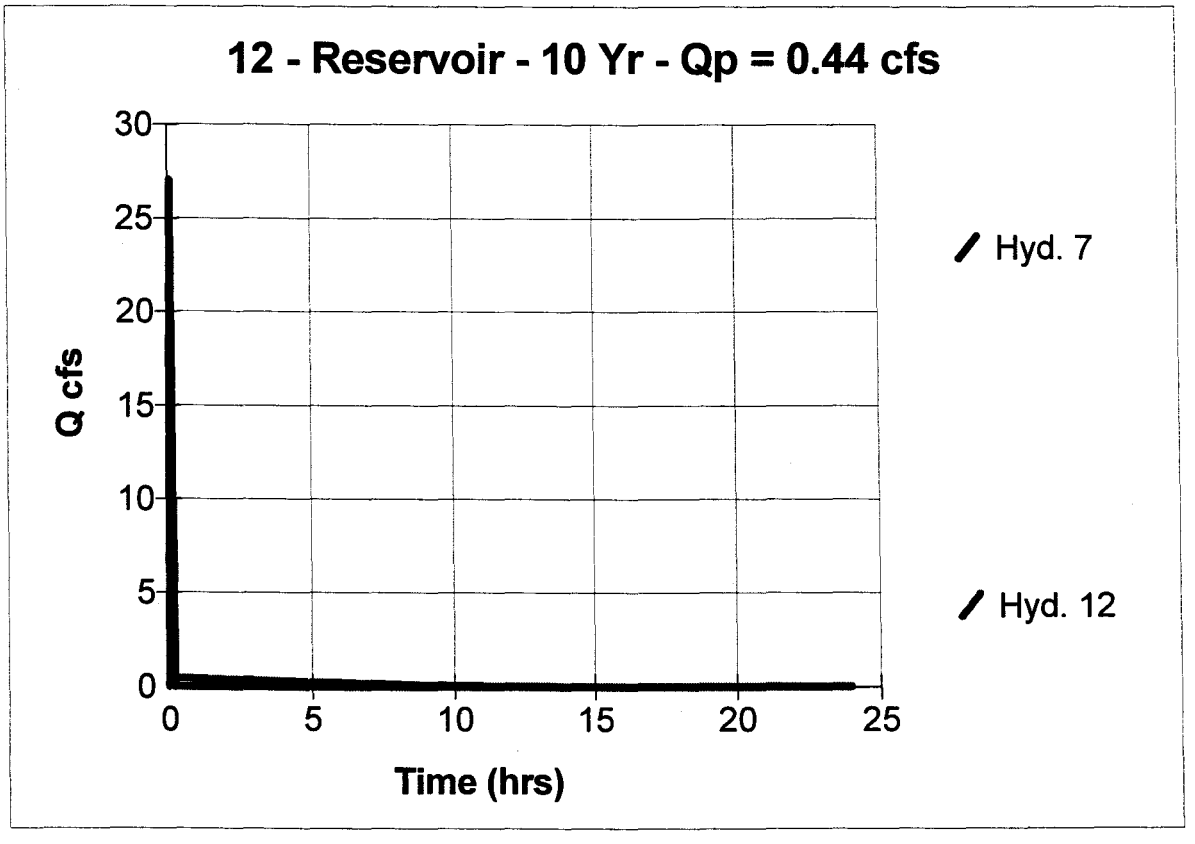

Routed 10-YR.

Hydrograph Plot

English

Hyd. No. 13

100yr routing

Hydrograph type	=	Reservoir	Peak discharge	=	0.50 cfs
Storm frequency	=	100 yrs	Time interval	=	1 min
Inflow hyd. No.	=	8	Reservoir name	=	pond1
Max. Elevation	=	76.59 ft	Max. Storage	=	29,503 cuft

Never reaches riser crest @ EL 77.0

Storage Indication method used.

Total Volume = 12,312 cuft

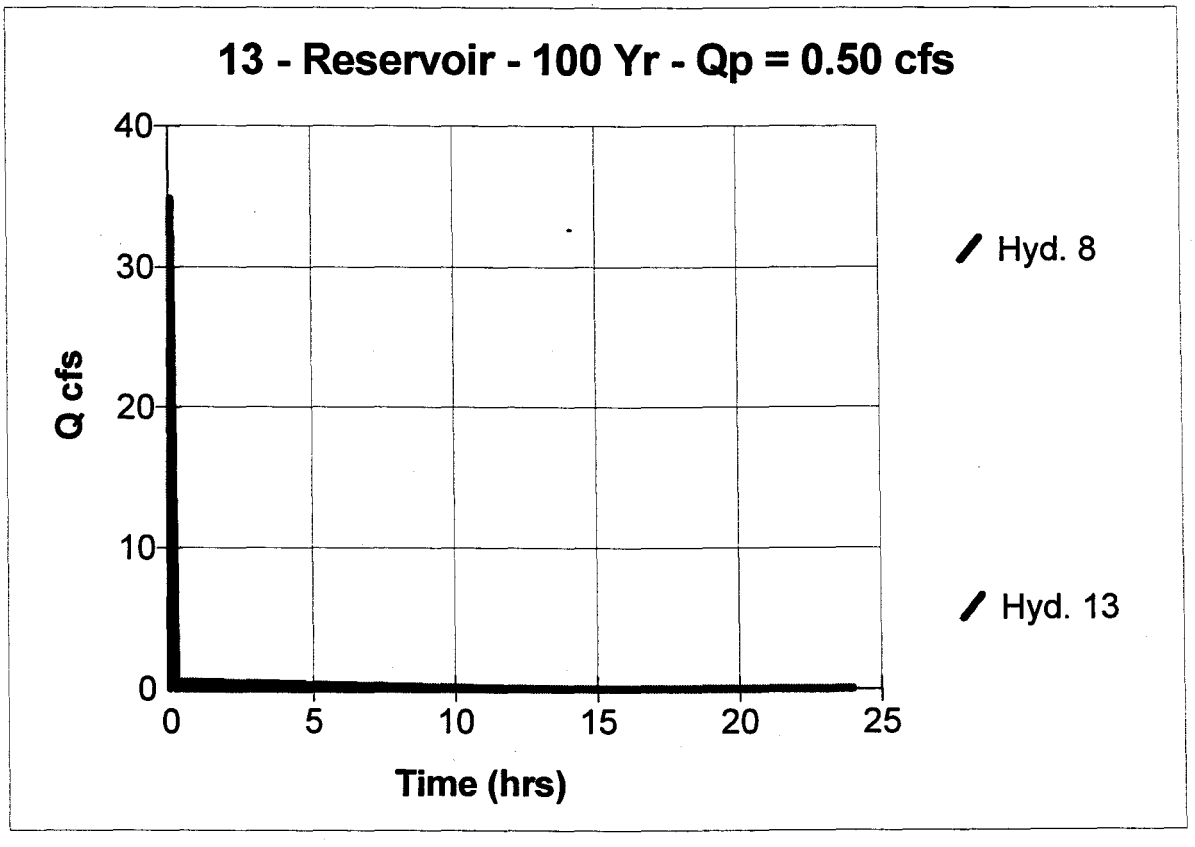

Routed 100-yr.

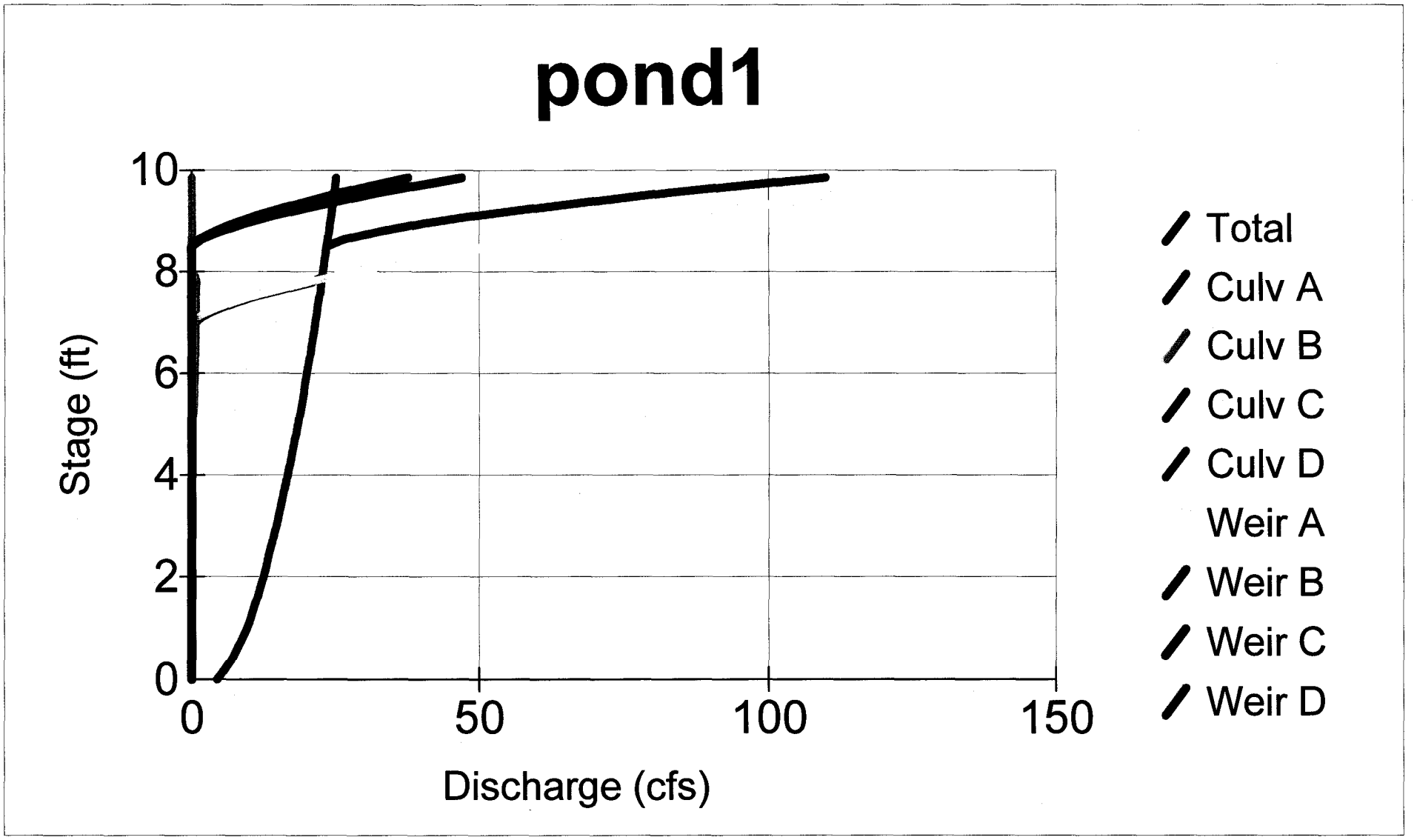
pond1
Stage (ft)
10
8
6
4
2
0
0
50
100
150
Discharge (cfs)
Total
Culv A
Culv B
Culv C
Culv D
Weir A
Weir B
Weir C
Weir D

Reservoir Report

English

Reservoir No. 1 - pond1

Pond Data

Pond storage is based on known contour areas

Stage / Storage Table

Stage ft	Elevation ft	Contour area sqft	Incr. Storage cuft	Total storage cuft
0.00	70.00	1,094	0	0
2.00	72.00	2,396	3,490	3,490
3.70	73.70	4,303	5,694	9,184
4.00	74.00	5,971	1,541	10,725
5.00	75.00	6,918	6,445	17,170
6.00	76.00	7,865	7,392	24,562
7.00	77.00	8,926	8,396	32,958
8.00	78.00	9,986	9,456	42,414
8.50	78.50	10,684	5,168	47,582
10.00	80.00	12,776	17,595	65,177

Culvert / Orifice Structures

	[A] BARREL	[B]	[C]	[D]
Rise in	= 18.0	4.0	0.0	0.0
Span in	= 18.0	4.0	0.0	0.0
No. Barrels	= 1	1	0	0
Invert El. ft	= 69.00	75.00	0.00	0.00
Length ft	= 100.0	0.0	0.0	0.0
Slope %	= 1.00	0.00	0.00	0.00
N-Value	= .013	.013	.000	.000
Orif. Coeff.	= 0.60	0.60	0.00	0.00
Multi-Stage	= -----	Yes	No	No

Weir Structures

	[A] RISER	[B]	[C] EMER SPILLWAY ??	[D]
Crest Len ft	= 9.4	8.0	10.0	0.0
Crest El. ft	= 77.00	78.50	78.50	0.00
Weir Coeff.	= 3.00	3.00	3.00	0.00
Eqn. Exp.	= 1.50	1.50	1.50	0.00
Multi-Stage	= Yes	No	No	No

Tailwater Elevation = 69.20 ft

Note: All outflows have been analyzed under inlet and outlet control.

Stage / Storage / Discharge Table

Stage ft	Storage cuft	Elevation ft	Clv A cfs	Clv B cfs	Clv C cfs	Clv D cfs	Wr A cfs	Wr B cfs	Wr C cfs	Wr D cfs	Discharge cfs
0.00	0	70.00	4.31	0.00	---	---	0.00	0.00	0.00	---	0.00
2.00	3,490	72.00	12.33	0.00	---	---	0.00	0.00	0.00	---	0.00
3.70	9,184	73.70	15.98	0.00	---	---	0.00	0.00	0.00	---	0.00
4.00	10,725	74.00	16.54	0.00	---	---	0.00	0.00	0.00	---	0.00
5.00	17,170	75.00	18.29	0.00	---	---	0.00	0.00	0.00	---	0.00
6.00	24,562	76.00	19.88	0.38	---	---	0.00	0.00	0.00	---	0.38
7.00	32,958	77.00	21.36	0.57	---	---	0.00	0.00	0.00	---	0.57
8.00	42,414	78.00	22.74	0.00	---	---	28.20	0.00	0.00	---	22.74
8.50	47,582	78.50	23.40	0.00	---	---	51.81	0.00	0.00	---	23.40
10.00	65,177	80.00	25.27	0.00	---	---	146.53	44.09	55.11	---	124.48

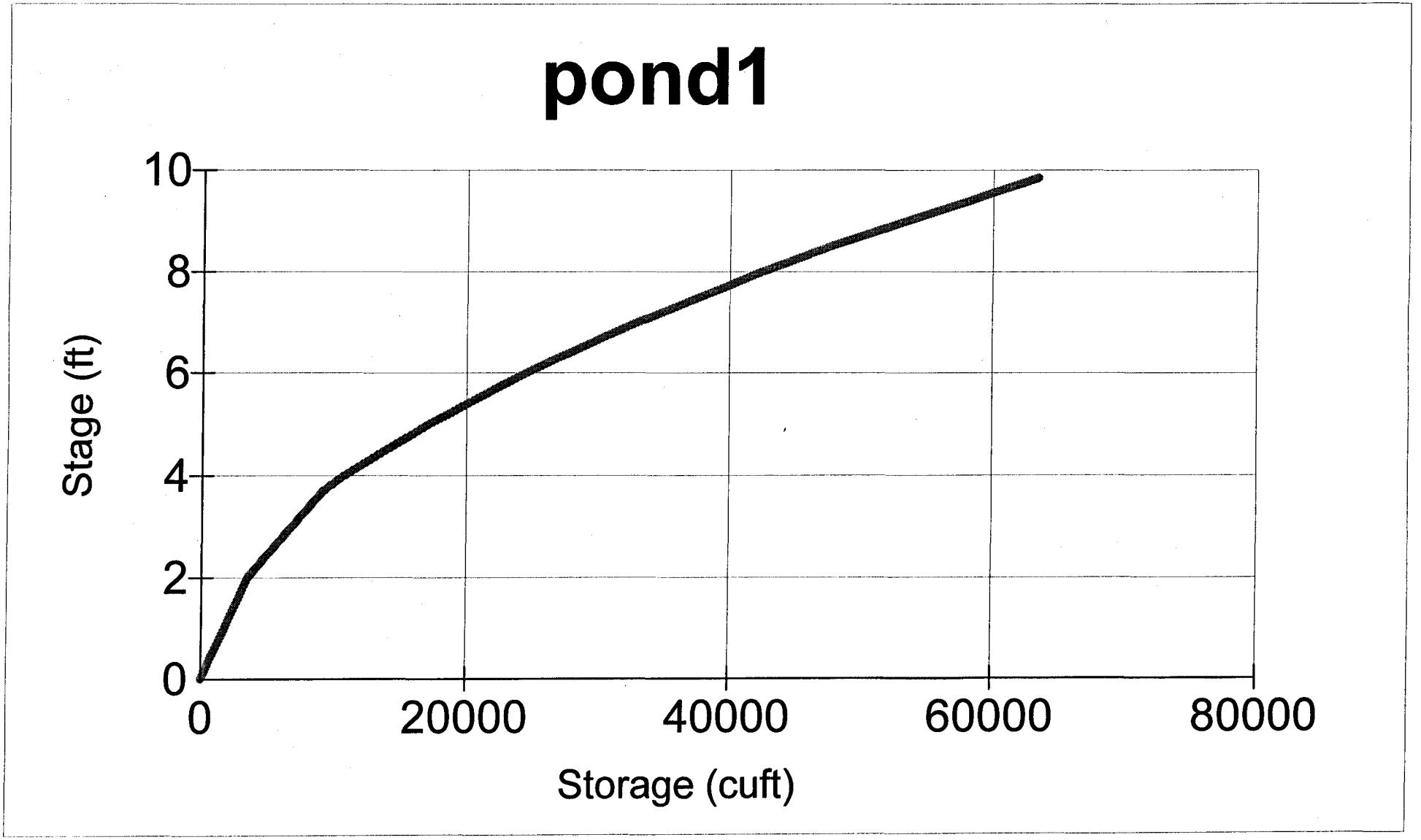
pond1
Stage (ft)
10
8
6
4
2
0
0
20000
40000
60000
80000
Storage (cuft)

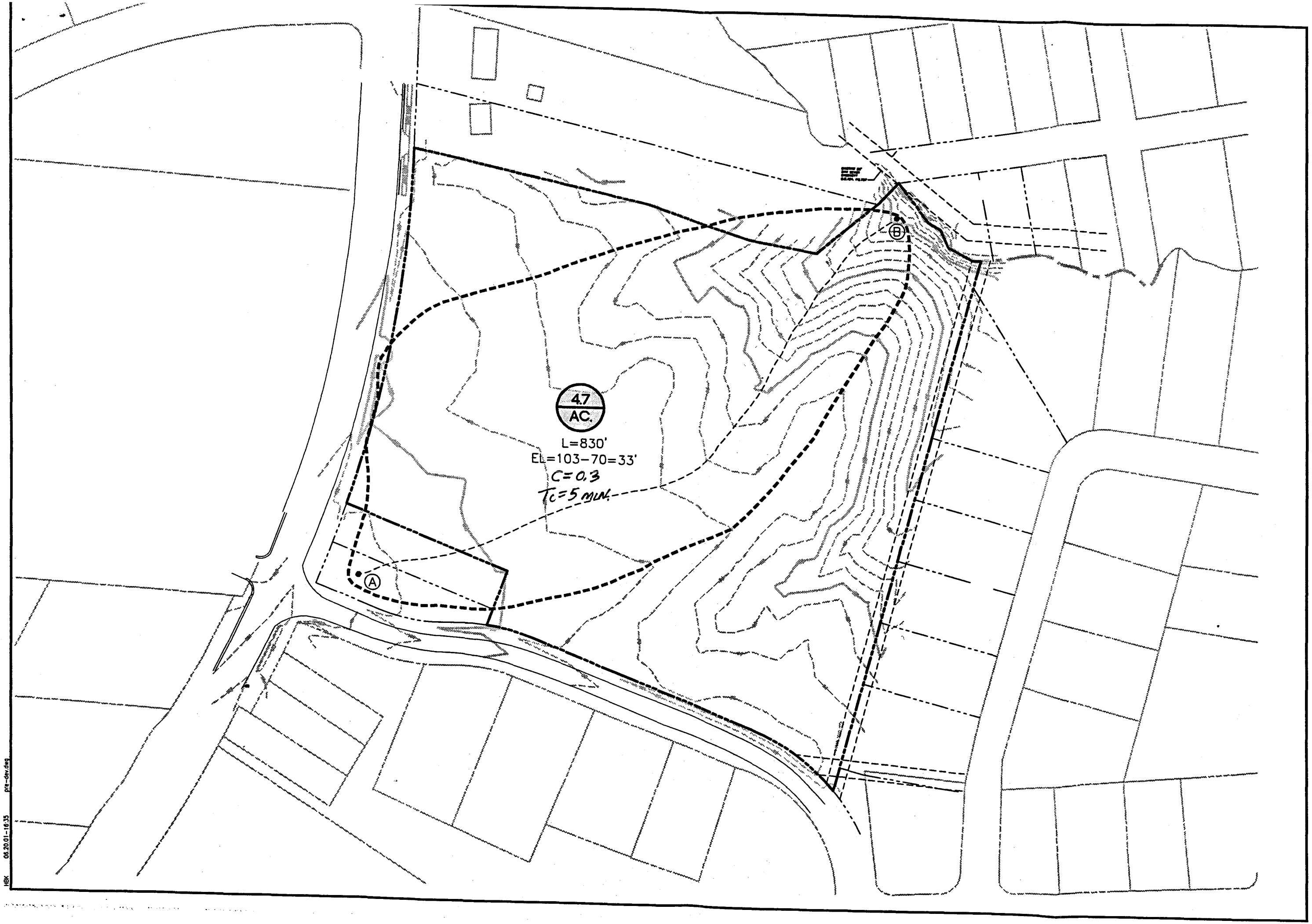

No.	DATE	REVISION / COMMENT / NOTE	BY

AES CONSULTING ENGINEERS
8248 Olde Towne Road, Suite 1
Williamsburg, Virginia 23188
(757) 253-0040
Fax (757) 220-8994

PRE-DEVELOPMENT DRAINAGE AREAS

IRONBOUND VILLAGE

JAMES CITY COUNTY VIRGINIA

Designed	Drawn
AES	AES
Scale	Date
1"=1000'	6/19/01

Project No.
8914-01

Drawing No.
1 OF 1

HBK 06.20.01-16:35 pre-dev.dwg

TCC

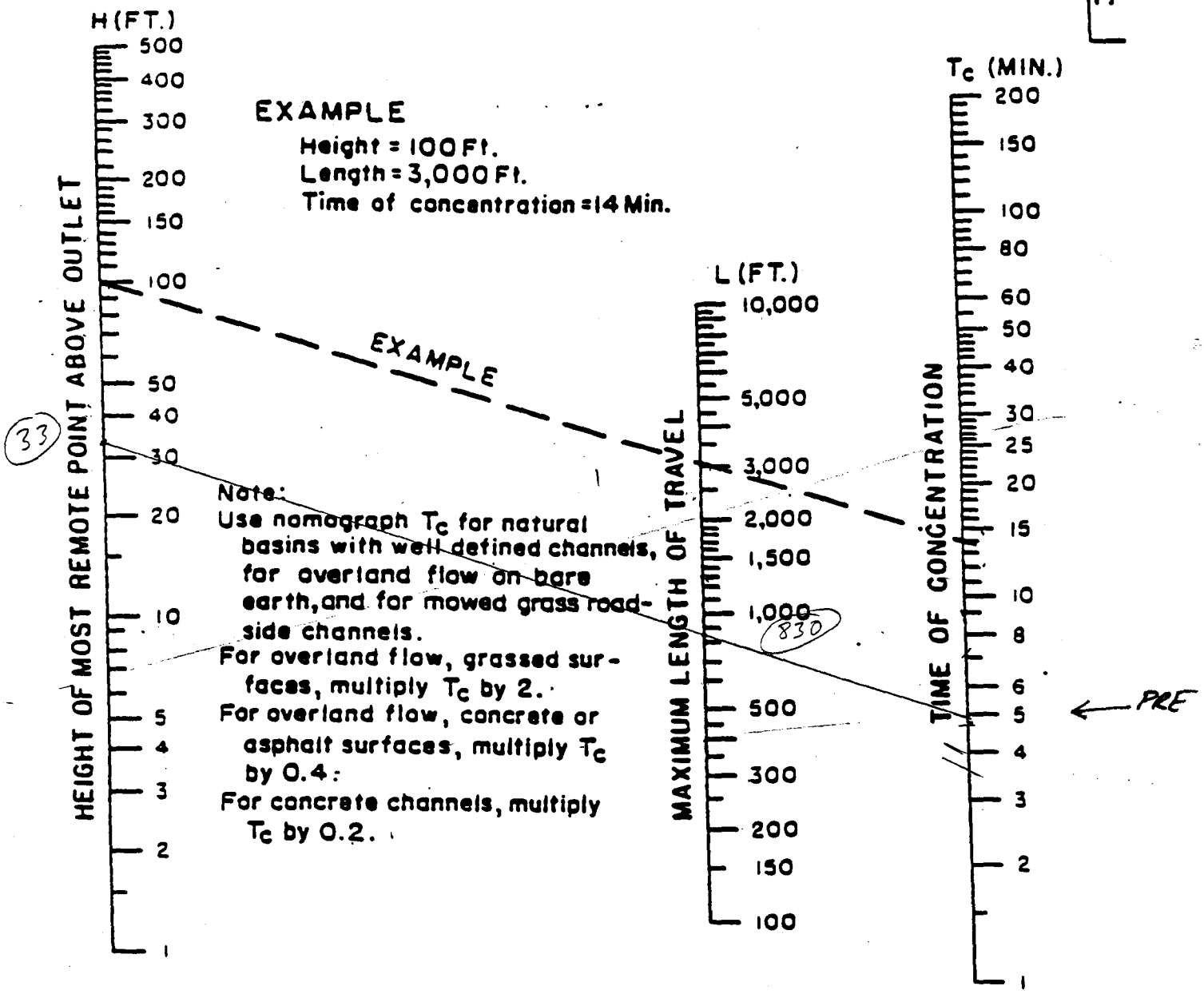

Based on study by P. Z. Kirpich,
Civil Engineering, Vol. 10, No. 6, June 1940, p. 362

TIME OF CONCENTRATION OF SMALL DRAINAGE BASINS

Hydrograph Plot

English

Hyd. No. 1

2yr Pre

Hydrograph type	= Rational	Peak discharge	= 7.79 cfs
Storm frequency	= 2 yrs	Time interval	= 1 min
Drainage area	= 4.7 ac	Runoff coeff.	= 0.3
Intensity	= 5.53 in	Time of conc. (Tc)	= 5 min ? ok
I-D-F Curve	= JCChydrographs.IDF	Reced. limb factor	= 1.5

Total Volume = 2,922 cuft

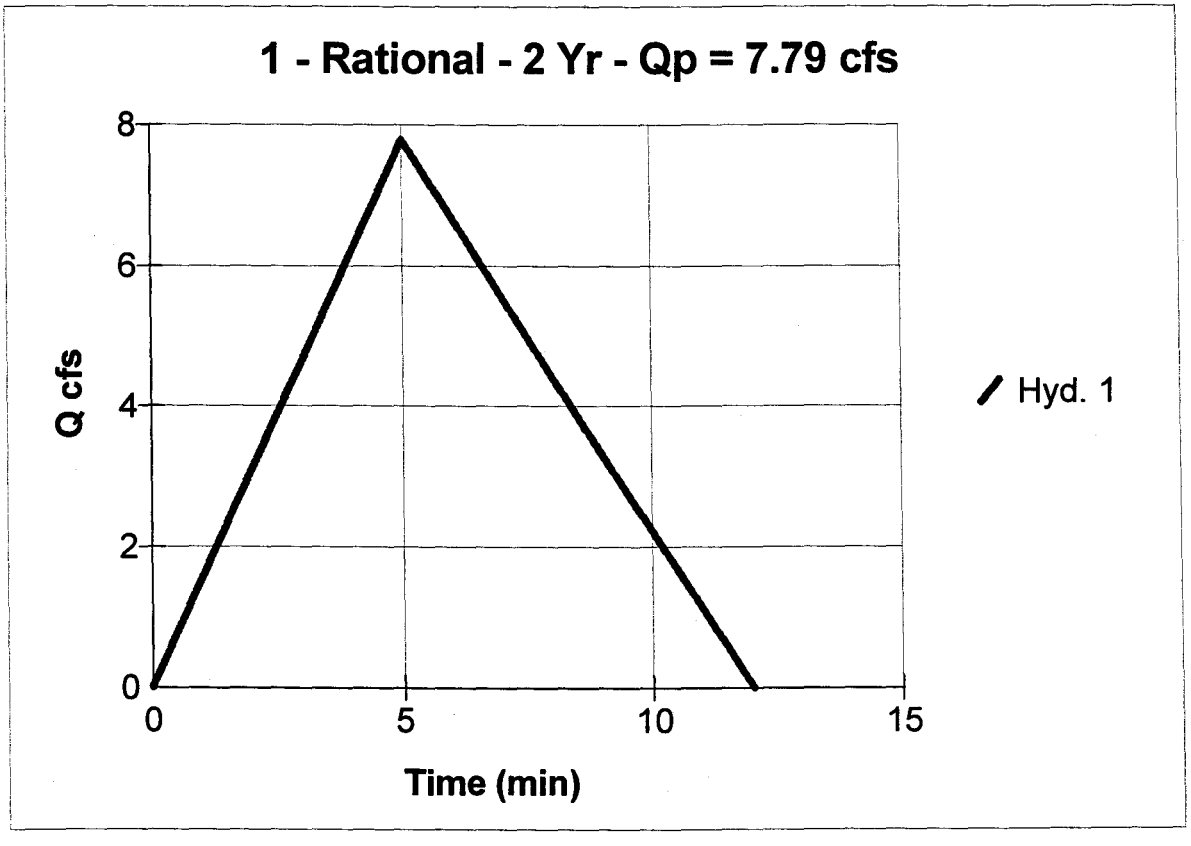

Hydrograph Plot

English

Hyd. No. 2

10yr Pre

Hydrograph type	= Rational	Peak discharge	= 10.05 cfs
Storm frequency	= 10 yrs	Time interval	= 1 min
Drainage area	= 4.7 ac	Runoff coeff.	= 0.3
Intensity	= 7.13 in	Time of conc. (Tc)	= 5 min
I-D-F Curve	= JCChydrographs.IDF	Reced. limb factor	= 1.5

Total Volume = 3,768 cuft

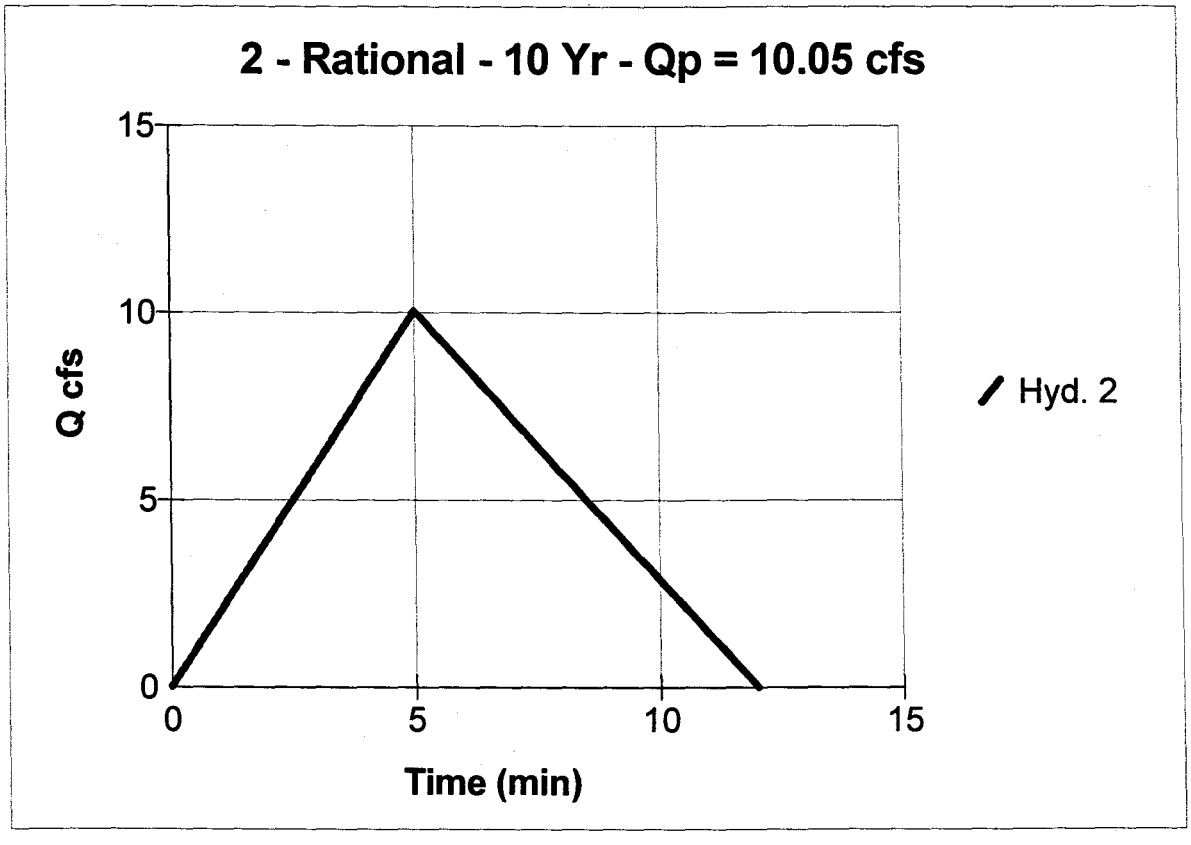

Hydrograph Plot

English

Hyd. No. 3

100yr Pre

Hydrograph type	= Rational	Peak discharge	= 12.95 cfs
Storm frequency	= 100 yrs	Time interval	= 1 min
Drainage area	= 4.7 ac	Runoff coeff.	= 0.3
Intensity	= 9.19 in	Time of conc. (Tc)	= 5 min
I-D-F Curve	= JCChydrographs.IDF	Reced. limb factor	= 1.5

Total Volume = 4,858 cuft

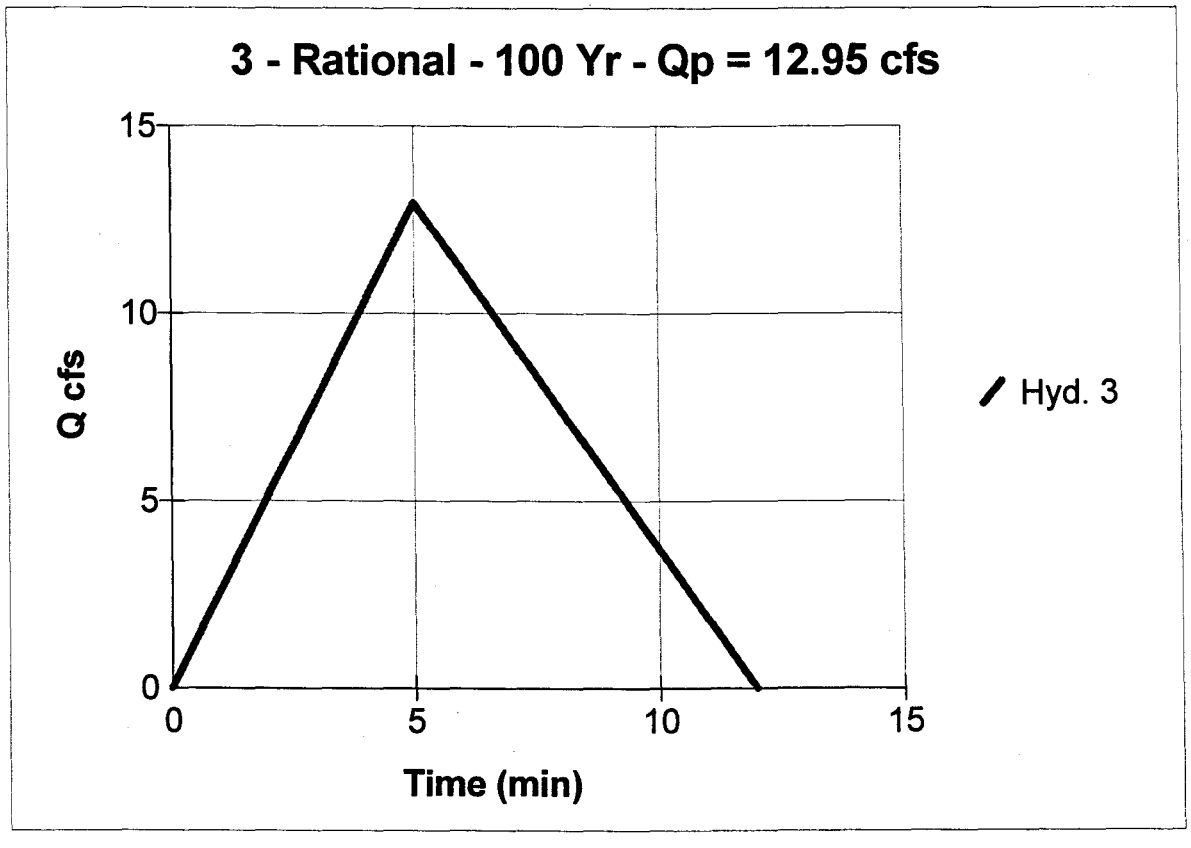

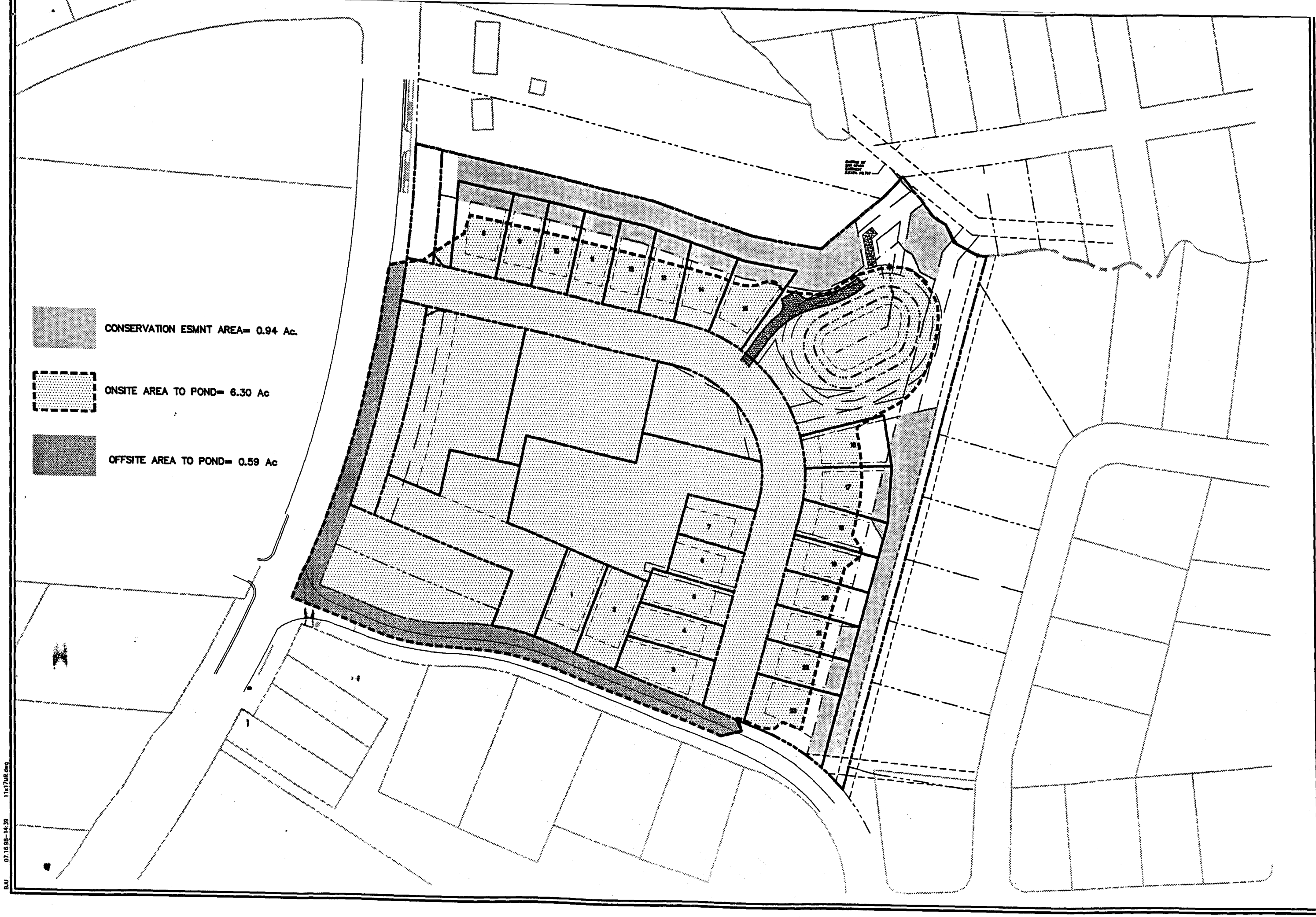

No.	DATE	REVISION / COMMENT / NOTE	BY

5248 Olde Towne Road, Suite 1
Williamsburg, Virginia 23188
(757) 253-0040
Fax (757) 220-8994
CONSULTING ENGINEERS

BMP MAP

Designed AES	Drawn AES
Scale 1"=1000'	Date 6/19/01
Project No. 8914-01	
Drawing No. 1OF1	

BJJ 07.16.98-14:39 11x17MR.dwg
X:\jobs\8914\01 dev\design\bmp

WORKSHEET FOR BMP POINT SYSTEM

TOTAL SITE AREA = 7.75 AC.

A. STRUCTURAL BMP POINT ALLOCATION

BMP	BMP Points		Fraction of Site Served		Weighted BMP Points
Wet Pond (E.D.)	10	x	(6.30+0.59) ÷ 7.75	=	8.89

TOTAL WEIGHTED STRUCTURAL BMP POINTS: 8.89

B. NATURAL OPEN SPACE CREDIT

Adjacent To Wetland	Natural Open Space Credit		Fraction of Site		Points for Natural Open Space
No	10	x	0.94 ÷ 7.75	=	1.21

C. TOTAL WEIGHTED POINTS

Structural BMP Points		Natural Open Space Points		Total
8.89	+	1.21	=	10.10

NOTES:

1) Natural open space has been placed in a conservation easement.

S:\JOBS\8914\01-IBV\Design\Pond\bmp-pnts.doc

Impervious Area and Required Volume Calculations
for
Ironbound Village
AES# 8914-1

Impervious items	Totals		Acres
Houses	23 Ea	1350 SF	0.71
T.H.	7 Ea	912 SF	0.15
Office	4 Ea	2400 SF	0.22
Drveways	23 Ea	312 SF	0.16
Roads:			
Public	870 LF	31 Width	0.62
Private	530 LF	60 Width	0.73
Pond Access Rd	340 LF	12 Width	0.09
Wet Pond Surface @ N.P.	105 LF	65 Width	0.16
Sidewalks:			
w/in R/W	850 LF	8 Width	0.16
Offsite Road	500 LF	12 Width	0.14
		Total Impervious Area (TIA)	**3.14**

Area to Pond = 6.8 Acres

Percent Impervious = 46% ✓

Pond's Required Wet Volume = (1")(ft/12")(TIA Ac)(43560 sf/Ac) = 11,390 c.f.

Pond's Required Dry Volume = (1")(ft/12")(TIA Ac)(43560 sf/Ac) = 11,390 c.f.

Sediment Forebay's Required Volume = (0.1")(ft/12")(TIA Ac)(43560 sf/Ac) = 1,139 c.f.

$$\frac{\text{IMPERV}\ 3.14(0.95) + \text{OTHER}\ 3.66(0.5)}{6.8}$$

C=0.70 ; C=0.60 W/ OTHER AT C=0.3

C=0.55 USED

OK WQV

BMP VOLUME CALCULATIONS
for
~~STONEHOUSE Ph 1, Bent Tree (Sect. V-B) Ph3~~
AES Project No.: 8878-00

PROPOSED POND VOLUME

Eleva	Depth	Area (sq. ft.)	Incremental Volume (cu. ft.)	Sum Volume (cu. ft.)	Sum Volume (cu. yd.)	Volume Above NPE
70.0	0.0	1,094	0	0	0	
72.0	2.0	2,396	3,490	3,490	129	
73.7	1.7	4,303	5,694	9,184	340	
74.0	0.3	5,971	1,541	10,725	397	
75.0	1.0 PP	6,918	6,445	17,170	636	0
76.0	1.0	7,865	7,392	24,561	910	7,391
77.0	1.0	8,926	8,396	32,957	1,221	15,787
78.0	1.0	9,986	9,456	42,413	1,571	25,243
78.5	0.5	10,684	5,168	47,580	1,762	30,410
80.0	1.5	12,776	17,595	65,175	2,414	48,005

RELEASE RATE REQUIRED TO DETAINED VOLUME FOR 24 HOURS

Required BMP Volume (based upon Impervious Area) = **11,390** cubic feet

Volume Provided (based upon above table) = 15,787 cubic feet

SEE FIRST PAGE

Elevation of water surface associated with provided volume = 77.0

Elevation of Low Flow Orifice = 75.0

Average Head, in feet = 1.0

Average Release Rate Calculation $\frac{15{,}787 \text{ cubic feet}}{\text{(24 hours x 60 minutes/hour x 60 seconds/ minute)}}$ = 0.2 cfs

LOW FLOW ORIFICE DIAMETER REQUIRED TO MAINTAIN AVERAGE RELEASE RATE

Diameter of Low Flow Orifice = 2 * (Q / ((64.32 * (h / 2)) ^ (1/2) * 0.6 * 3.14))) ^ (1/2)

where, Q equals average release rate (cfs), h equals average head (feet)

Diameter of Low Flow Orifice = 0.30 feet, or 4 inches

SEDIMENT FOREBAY
for
Ironbound Village
AES Project No.: 8914-1

DRAINAGE AREA TO POINT OF CONCERN 6.8 Acres

IMPERVIOUS AREA TO POINT OF CONCERN 3.14 Acres

STORAGE REQUIRED

A. Volume = 1" per Impervious Area = 1139 cf

STORAGE PROVIDED

Eleva	Depth	Area (sq. ft.)	Incremental Volume (cu. ft.)	Wet Volume (cu. ft.)	Wet Volume (cu. yd.)		
70.0	0.0	422	0	0	0		
72.0	2.0	994	1,416	1,416	52		
73.0	1.0	1,365	1,180	2,596	96		

1180 > 1139 ok.

C. Anti-Flotation Calculations

Down Force = Wt of riser + Wt. of Soil + Wt. of Anti-Vortex Cap

Wt. of Riser = Wt. Walls + Wt. Slab + Wt. Grout - Openings - Weir

Wt. Walls = $((O.D./2)^2 - (I.D./2)^2) \times 3.14 \times (\text{Height}) \times 150$ LB/CF

Wt. of walls	**7418**	LB
Wt. Slab	Area Base Slab x Thickness x 150LB/CF	
Wt. of slab	**2944**	LB
Wt. Grout	**4239**	LB
Wt. outlet opening	**132**	LB
Wt. of weir	**0**	LB
Wt.of Riser =	**14469**	LB

Wt. of Soil = Wt. Soil at the Angle of Repose - Wt. Water
= (Vol. Above Base Slab - Vol. Riser) x (110LB - 64.4 LB)

Slab Area =	**19.63**	SF	
			Avg. Area =
Surface Area =	**39.75**	SF	**29.69**
Vol. above Base =	**178**	CF	
Vol. Riser =	**103**	CF	
Wt. Soil =	**4686**	LB	

Wt. Anti-Vortex Cap **2220** LB

Total Down Force =	**21375**	LB	↓ ✓	(14469 + 4686 + 2220)
Total Uplift =	**12815**	LB	↑ ✓	
Resultant Force =	**8559**	LB	↓	OK

FS = 1.668 > 1.5 OK

Buoyancy / Anti-Flotation Calculations

A. Sketch:

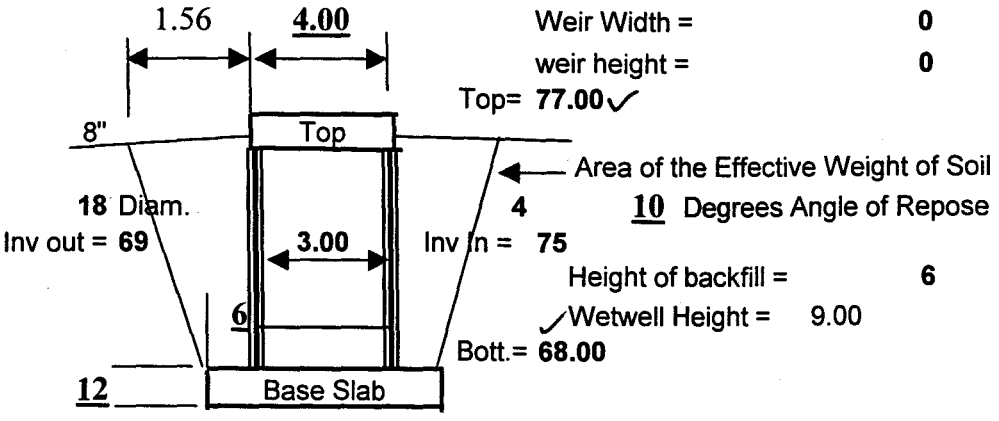

B. Buoyancy Calculations (Uplift)

Uplift = Wt. Water Displaced by the Wetwell

Vol. of the riser = $(O.D. / 2)^2 \times 3.14 \times$ Height

113 CF

Vol. of slab = $(Dia. Slab / 2)^2 \times 3.14 \times$ Slab Thickness

20 CF

Total Vol. of Displacement = **133** CF

Total Uplift **8544** LB ↑Up

Safety factor against uplift = 1.3 for any pond

Safety factor against uplift = 1.5 at normal pool elevation of wet ponds

Total Uplift with safety factor = **12815** LB ↑Up

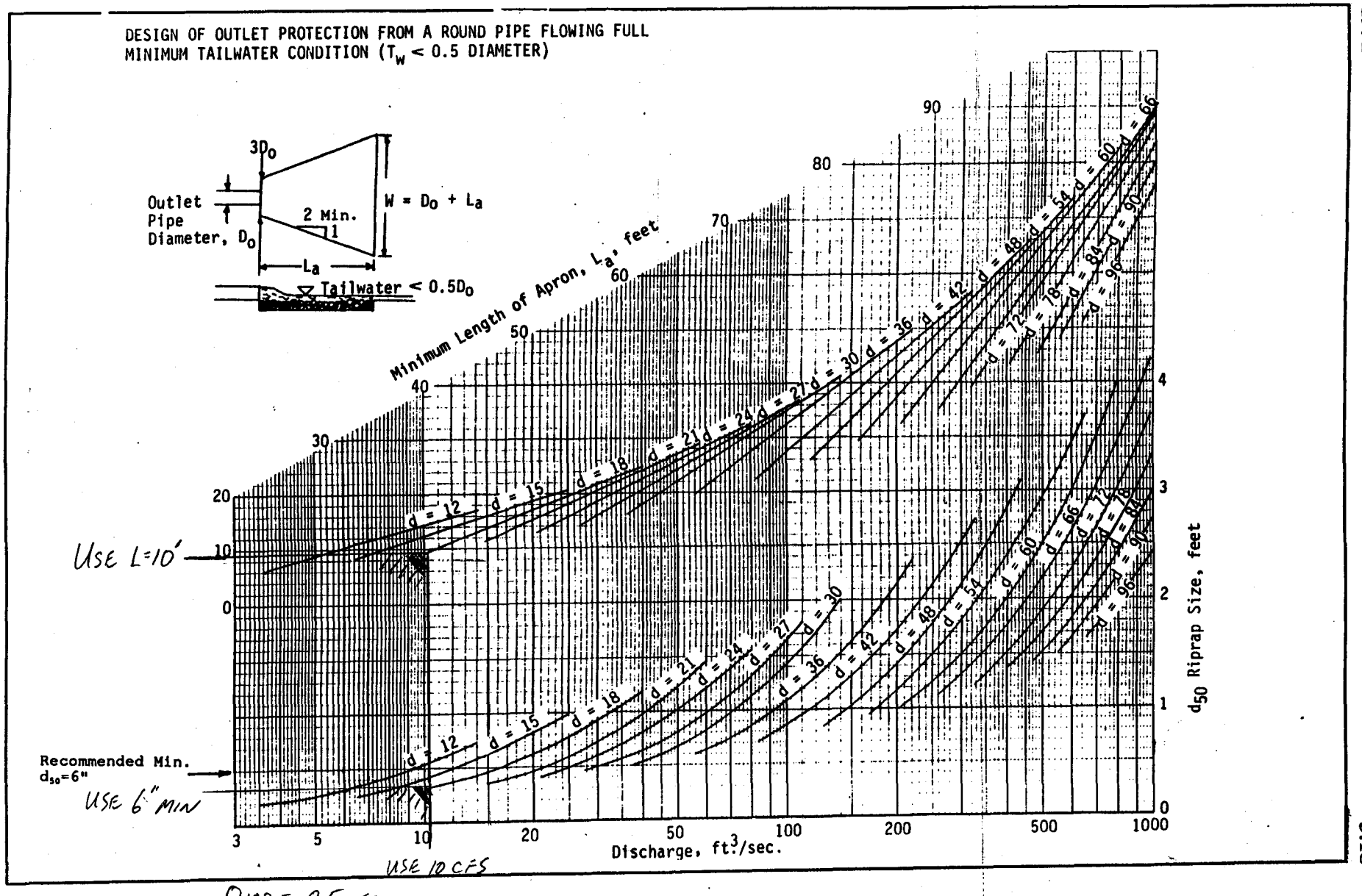

Q_{100} = 0.5 cfs

Source: USDA-SCS

Plate 3.18-3

James City County, Virginia
Environmental Division

Erosion and Sediment Control and Stormwater Management Design Plan Checklists

Table of Contents

Contents		Page
Erosion and Sediment Control Plan		
I.	General	1
II.	Site Plan	1
III.	Narrative	3
IV.	Calculations	4
Stormwater Management Design Plan		
I.	General	5
II.	Stormwater Conveyance Systems	7
III.	Stormwater Management / BMP Facilities	8
IV.	Outlet Protections	13
V.	Additional Comments and Information	14

GENERAL INFORMATION

Project Name: IRONBOUND VILLAGE
Owner / Applicant: CUTTING EDGE Inc.
Designer: AES
Location:
Tax Map / Parcel: (39-1) (1-47 & 47A)
County Plan No. (if known): SP-29-01 & S-36-01
County BMP Type: WET POND EXTENDED DETENTION (-)

Other information submitted in addition to this checklist (Check all that apply):

- ☑ Design or Construction Drawings (Plans, Profiles, Details, etc.).
- ☑ Erosion & Sediment Control Plan (Plans, Details, etc.).
- ☑ Erosion & Sediment Control Plan Design Report.
- ☑ Stormwater Management Design Plan (Plans, Profiles, Details, etc.).
- ☑ Stormwater Management Design Report.
- ☐ Other, List: _____

Pre-Final Version
March 9, 2000

JAMES CITY COUNTY, VIRGINIA
ENVIRONMENTAL DIVISION

EROSION AND SEDIMENT CONTROL PLAN CHECKLIST

I. *GENERAL:*

Yes	No	N/A	
☑	☐	☐	*FAMILIARITY* with current versions of Chapter 8, Erosion and Sedimentation Control and Chapter 23, Chesapeake Bay Preservation ordinances of the Code of James City County, Virginia and the Virginia Erosion and Sediment Control Handbook (VESCH).
☑	☐	☐	*LAND DISTURBING PERMIT AND SILTATION AGREEMENT* with surety are required for the project.
☐	☐	☑	*VARIANCE* if necessary, requested in writing, for the plan approving authority to waive or modify any of the minimum standards and specifications of the VESCH deemed inappropriate based on site conditions specific to this review case only. Variances which are approved shall be properly documented in the plan and become part of the approved erosion and sediment control plan for the site.

II. *SITE PLAN:*

Yes	No	N/A	
☑	☐	☐	*VICINITY MAP* locating the site in relation to the surrounding area. Include any major landmarks which might assist in physically locating the site.
☑	☐	☐	*INDICATE NORTH* direction in relation to the site.
☑	☐	☐	*LIMITS OF CLEARING AND GRADING* for the site including that required for implementation of erosion and sediment controls and stockpile areas.
☑	☐	☐	*DISTURBED AREA ESTIMATES* in acres or square feet for the project.
☑	☐	☐	*EXISTING TOPOGRAPHY* or contours for the site at no more than 5 foot contour interval.
☑	☐	☐	*FINAL TOPOGRAPHY*, contours or proposed site grading in accordance with the design plan which indicates changes to existing topography and drainage patterns at no more than 2 foot contour interval.
☑	☐	☐	*EXISTING AND PROPOSED SPOT ELEVATIONS* to supplement existing and proposed contours, topography or site grading information. Spot elevations may replace final contours in some instances, especially if terrain is in a low lying area or relatively flat.
☑	☐	☐	*EXISTING VEGETATION* including existing tree lines, grassed or unique vegetation areas.

Yes	No	N/A	
☑	☐	☐	*EXISTING SITE FEATURES* including roads, buildings, homes, utilities, streams, fences, structures and other important surface features of the site.
☑	☐	☐	*SOILS MAP* with soil symbols, boundaries and legend in accordance with the current Soil Survey of James City and York Counties and the City of Williamsburg, Virginia.
☑	☐	☐	*ENVIRONMENTAL INVENTORY* in accordance with Section 23-10(2) of the Chesapeake Bay Preservation Ordinance of James City County. Inventory generally includes: tidal shores and wetlands, non-tidal wetlands, resource protection area, hydric soils and slopes steeper than 25 percent. For wetlands, provide a copy of issued permits or satisfactory evidence that appropriate permits are being pursued for the entire project.
☑	☐	☐	*100-YEAR FLOODPLAIN LIMITS* or any special flood hazard areas or flood zones based on appropriate Federal Management Agency Flood Insurance Rate Maps (FIRMs) or Flood Hazard Boundary Maps (FHBMs) of James City County, Virginia.
☑	☐	☐	*EXISTING AND PROPOSED DRAINAGE AREAS* for offsite and onsite areas. Include drainage divides and directional labels for all subareas at points of interest and size (in acres), weighted runoff coefficient or curve number and times of concentration for each subarea.
☑	☐	☐	*CRITICAL EROSION AREAS* which require special consideration or unique erosion and sediment control measures. Refer to the VESCH, Chapter 6 for criteria.
☑	☐	☐	*DEVELOPMENT PLAN* for the site showing all improvements such as buildings, structures, parking areas, access roadways, above and below ground utilities, stormwater management and drainage facilities, trails or sidewalks, proposed vegetation and landscaping, amenities, etc.
☑	☐	☐	*LOCATION OF PRACTICES* proposed for erosion and sediment control, tree protection and temporary stormwater management due to land disturbance activities at the site. Use standard abbreviations, labels and symbols consistent with the minimum standards and specification in Chapter 3 of the VESCH.
☑	☐	☐	*TEMPORARY STOCKPILE AREAS* or staging and equipment storage areas as required for onsite or offsite construction activities or indicate that none are anticipated for this project.
☑	☐	☐	*OFFSITE LAND DISTURBING AREAS* including borrow sites, waste areas, utility extensions, etc. and required erosion and sediment controls. If none are anticipated for the project, then indicate on the plans by general or erosion and sediment control notes.
☑	☐	☐	*DETAILS* in accordance with the minimum standards and specifications in Chapter 3 of the VESCH for each erosion and sediment control measure proposed for the project. Schedules or tables may be used for multiple site measures such as sediment traps, basins, stormwater conveyance channels, slope drains, etc. Any modifications to the standard details should be clearly defined, explained and illustrated.

Yes No N/A

☑ ☐ ☐ *MAINTENANCE PLAN* outlining the inspection frequency and maintenance requirements for all erosion and sediment control measures proposed for the project.

☐ ☐ ☑ *TRENCH DEWATERING* methods and erosion and sediment controls, if anticipated for the project.

☑ ☐ ☐ *CONSTRUCTION SEQUENCE* outlining the anticipated sequence for installation of erosion and sediment controls and site, grading and utility work to be performed for the project by the site contractor.

☑ ☐ ☐ *PHASING PLAN* if required for larger project sites that are to be developed in stages or phases.

☑ ☐ ☐ *STANDARD COUNTY NOTES* are required to be placed on the erosion and sediment control plan. Refer to the standard James City County Erosion and Sediment Control Notes dated May 5, 1999.

☑ ☐ ☐ *PROFESSIONAL SEAL AND SIGNATURE* required on final and complete approved plans, drawings, technical reports and specifications.

III. *NARRATIVE:*

Yes No N/A

☑ ☐ ☐ *PROJECT DESCRIPTION* briefly describing the nature and purpose of the land disturbing activity and the acreage to be disturbed.

☑ ☐ ☐ *EXISTING SITE CONDITIONS* description of existing topography, land use, cover and drainage patterns at the site.

☑ ☐ ☐ *ADJACENT AREA* descriptions for neighboring onsite or offsite areas such as streams, lakes, property, roads, etc. and potential impacts due to concentrated flow or runoff from the land disturbing activity.

☑ ☐ ☐ *OFFSITE DISTURBED AREA* descriptions of proposed borrow sites, waste or surplus areas, utility extensions and erosion and sediment controls to be implemented.

☑ ☐ ☐ *SOILS DESCRIPTION* briefly summarizing site, disturbed area and drainage basin soils including name, unit, hydrologic soil group (HSG) classification, surface runoffpotential, erodibility, permeability, depth, texture, structure, erosion hazards, shrink-swell potential, limitations for use and anticipated depths to bedrock and the seasonal water table, as applicable.

☑ ☐ ☐ *CRITICAL AREAS* on the site which many have potentially serious erosion and sediment control problems and special considerations required (ie. steep slopes, hydric, channels, springs, sinkholes, etc.)

Yes No N/A

☑ ☐ ☐ *PROPOSED EROSION & SEDIMENT CONTROL MEASURES* inclusive to the specific erosion and sediment control plan proposed for the land disturbing activity. Measures should be consistent with those proposed in the site plan. Address general use, installation, limitations, sequencing and maintenance requirements for each control measure.

☑ ☐ ☐ *STABILIZATION MEASURES* required for the site, either temporary or permanent, and during and following construction including temporary and permanent seeding and mulching, paving, stone, soil stabilization blankets and matting, sodding, landscaping or special stabilization techniques to be utilized at the site.

☑ ☐ ☐ *STORMWATER MANAGEMENT CONSIDERATIONS* for the site, either of temporary or permanent nature, and strategies, sequences and measures required for control. May reference the stormwater management plan for the site, if prepared, for permanent stormwater management facilities and control of drainage once the site is stabilized.

IV. *CALCULATIONS:*

Yes No N/A

☑ ☐ ☐ *CALCULATIONS AND COMPUTATIONS* for erosion and sediment control hydrology, hydraulics and design for temporary and permanent erosion and sediment control measures as proposed including: sediment traps, basins, diversions, stormwater conveyance channels, culverts, slope drains, outlet protection, etc. Computations are not required on the construction plan and may be attached in a supplemental erosion and sediment control plan design report, if presented in a clear organized format.

☑ ☐ ☐ *TEMPORARY SEDIMENT BASIN DESIGN DATA SHEET* submitted for each basin along with schematic cross-section showing applicable design and construction data, dimensions and elevations. Peak design runoff to be based the 2- or 25-year storm event based on maximum disturbed site conditions in accordance with Minimum Standard 3.14 of the VESCH.

JAMES CITY COUNTY, VIRGINIA
ENVIRONMENTAL DIVISION

STORMWATER MANAGEMENT DESIGN PLAN CHECKLIST

I. *GENERAL REQUIREMENTS:*

Yes	No	N/A	
☑	☐	☐	*FAMILIARITY* with current versions of the James City County Guidelines for Design and Construction of Stormwater Management BMPs manual; Chapter 8, Erosion and Sediment Control and Chapter 23, Chesapeake Bay Preservation ordinances of the Code of James City County, Virginia; the Virginia Erosion and Sediment Control Handbook (VESCH); and the Virginia Stormwater Management Handbook (VSMH).
☑	☐	☐	*WAIVER OR EXCEPTION* if necessary, requested in writing, for the plan approving authority to waive or except the requirements of Chapter 23, Chesapeake Bay Preservation ordinance in accordance with procedure established in Sections 23-14 through 23-17 of the ordinance. Applies to this review case only.
☐	☐	☑	*VARIANCE REQUEST* if necessary, requested in writing for the plan approving authority to waive or modify any of the minimum standards and specifications of the VESCH deemed inappropriate based on site conditions specific to this review case only. Variances which are approved shall be properly documented in the plan and become part of the approved erosion and sediment control plan for the site.
☑	☐	☐	*PROFESSIONAL SEAL AND SIGNATURE* required on final and complete approved stormwater management plans, drawings, technical reports and specifications.
☑	☐	☐	*WORKSHEET FOR BMP POINT SYSTEM* to ensure the stormwater management plan for the project attains at least 10 BMP points.
☑	☐	☐	*INSPECTION/MAINTENANCE AGREEMENT* executed with the County for the project.
☑	☐	☐	*CONSERVATION EASEMENTS* for all natural open space points claimed in the BMP worksheet.
☑	☐	☐	*FEMA FIRM PANEL* reference with designated special flood hazard areas or zone designations associated with the site, as applicable.
☑	☐	☐	*DRAINAGE AREA MAP* at a maximum scale of 1"=200' scale showing drawing area boundaries for pre- and postdevelopment conditions and associated time of concentration flow paths. Labels to include drainage area size, runoff coefficient or curve number and time of concentration for each subarea shown on the map.
☑	☐	☐	*SOILS MAP* with soil symbols, boundaries and legend in accordance with the current Soil Survey of James City and York Counties and the City of Williamsburg, Virginia with approximate locations of the project site, BMPs and applicable drainage basins.

Yes No N/A

☑ ☐ ☐ *STORMWATER MANAGEMENT NARRATIVE* in a brief and simple format which describes the project; location; site and drainage basin soil characteristics; receiving water or drainage facility; existing site and drainage basin conditions (topography, land use, cover, slopes, etc.); proposed site development; proposed stormwater management and drainage plan including County BMP type selected; summary of hydrology and hydraulics; maintenance program; and any special assumptions utilized for development of the stormwater management and drainage design plan or computations.

☑ ☐ ☐ *TEMPORARY STORMWATER MANAGEMENT* and control of stormwater runoff encountered during construction activities. To be coordinated with the erosion and sediment control plan for the site. Adequate protection measures or sequencing provided.

☑ ☐ ☐ *MODIFICATION PLANS* for permanent BMPs including hydrologic and hydraulic computations, sequencing and details as required for any detention or retention pond(s) which will be utilized as a temporary sediment trap or basin during land disturbance or site construction activities. Not permitted for Bioretention, Infiltration and Filtering System facilities.

☑ ☐ ☐ *STORMWATER MANAGEMENT DESIGN REPORT* in a bound 8-1/2 x 11 inch size format. Report shall generally include a title sheet, date, project identification, owner and preparer information, table of contents, narrative, summaries and computations as required for backwater, closed conduits, headwater, hydraulics, hydraulic grade line, hydrology, inlets, open channels, pond routings, storm sewer, and water quality, extended detention or stream channel protection, as applicable, for the project. Computation data may include hand or computer generated computations and maps. All information should be presented in a clear, easy to follow format and closely match construction plan information.

☑ ☐ ☐ *PLAN VIEW* at 1 inch = 50 ft. scale or less (1" = 40', 1" = 30', etc.)

- ☑ ☐ ☐ North arrow and legend.
- ☑ ☐ ☐ Sealed by appropriate professional.
- ☑ ☐ ☐ Property Lines.
- ☑ ☐ ☐ Adjacent property information.
- ☑ ☐ ☐ Existing site features and impervious cover areas.
- ☑ ☐ ☐ Impervious cover estimates for the site.
- ☑ ☐ ☐ Existing drainage facilities (natural or manmade).
- ☑ ☐ ☐ Existing environmentally sensitive areas (RPA, wetlands, floodplain, steep slopes, critical soils, buffers, etc.).
- ☑ ☐ ☐ Existing and proposed contours (1' or 2' contour interval) and spot elevations as required for definition of high and low topography.
- ☑ ☐ ☐ Existing and proposed easements.
- ☑ ☐ ☐ Proposed site improvements and impervious cover areas.
- ☑ ☐ ☐ Proposed stormwater conveyance, drainage and management facilities with appropriate construction data and information.
- ☑ ☐ ☐ Proposed landscaping and seeding plans (interior, pond, buffers, etc.).
- ☑ ☐ ☐ Proposed slope stabilization areas (riprap, blankets, mattings, etc.).

Yes	No	N/A	
☑	☐	☐	Delineation of permanent and extended detention pools and 1-, 2-, 10- and 100-year design water surface elevations.
☐	☐	☑	Delineation of ponding, headwater, surcharge or backwater areas which may affect existing or proposed buildings or structures or upstream adjacent properties.
☑	☐	☐	Test borings locations.
☑	☐	☐	Risers, barrels, underdrains, overflows and outlet protections.
☑	☐	☐	Emergency spillway level section and outlet channel.
☑	☐	☐	Existing and proposed site utility locations and protection measures.
☑	☐	☐	Erosion and sediment control measures (for site and BMP construction).
☑	☐	☐	Maintenance or access corridors to permanent stormwater management, BMP or drainage facilities.

II. *STORMWATER CONVEYANCE SYSTEMS:*

Yes	No	N/A	
☑	☐	☐	*PLAN VIEWS*
☑	☐	☐	Storm drain lengths, sizes, types, classes and slopes for all segments.
☑	☐	☐	Access structure (inlets, manholes, junctions, etc.) rim elevations, inverts, type and required grate or top unit and lengths labeled.
☑	☐	☐	All structure numbers labeled.
☑	☐	☐	Structure and pipe schedule not required but encouraged.
☑	☐	☐	Adequate horizontal clearance from other site utilities or structures.
☑	☐	☐	*PROFILES* generally are not required but are encouraged to expedite review. If profiles are not provided within the plan set, ensure all pipe segments have adequate minimum cover, do not exceed maximum depths of cover at final grade for the type and class specified and do not conflict with other site utilities or excavation areas.
☑	☐	☐	*DETAILS*
☑	☐	☐	Typical storm drain bedding details or reference note.
☑	☐	☐	Standard details or reference note for all proposed access structure types (inlets, manholes, junctions, etc.).
☑	☐	☐	Inlet shaping detail or applicable reference note.
☑	☐	☐	Step detail or applicable reference note (if depth 4 ft. or more).
☑	☐	☐	Typical open channel details with designation, location, shape, type, bottom width, top width, lining, slope, length, side slope, and installation depth required for construction. Channel design data as necessary may also be included.
☑	☐	☐	Outlet protections at all pipe outfalls.

Yes No N/A

☑ ☐ ☐ *STORMWATER CONVEYANCE SYSTEM COMPUTATIONS*

- ☑ ☐ ☐ Storm Sewer Design computations based on 10-year design event.
- ☑ ☐ ☐ Hydraulic Grade Line computations based on 10-year design event.
- ☑ ☐ ☐ Inlet computations based on 10-year design storm event for spread, ponding depth and grate size required.
- ☑ ☐ ☐ Culvert Headwater computations based on 10-year design storm and 100-year check storm.
- ☑ ☐ ☐ Open Channel computations based on 2-year design event for velocity and 10-year design event for capacity.
- ☑ ☐ ☐ Outlet protection or special energy dissipation structure computations.
- ☑ ☐ ☐ Pipe thickness design computations, as required, for selected pipe type (live load, minimum cover, maximum height of cover, etc.).
- ☑ ☐ ☐ Adequate channel computations for receiving channels (based on detailed site mapping or field surveyed channel section).

DETAINED 1-YR STORM

III. *STORMWATER MANAGEMENT / BMP FACILITIES*:

Yes No N/A

☑ ☐ ☐ *HYDROLOGY* - An SCS based methodology is required for the design of stormwater management/BMP facilities with watersheds exceeding 20 acres. Under 20 acres, other generally accepted methodologies such as the modified rational, critical storm are allowable. Refer to Chapter 5 of the VESCH or Chapter 5 of the VSMH.

- ☑ ☐ ☐ RCN determinations: predeveloped and ultimate development land use scenarios.
- ☑ ☐ ☐ Time of concentration: predeveloped and ultimate development indicating overland, shallow concentrated, and channel flow components (200 ft. maximum length for overland flow).
- ☑ ☐ ☐ Hydrograph generation (tabular or graphical): predevelopment and ultimate development peak flows for the 1-, 2-, 10-, and 100-year design storms.

☑ ☐ ☐ *STORAGE VOLUME ESTIMATES* required between pre-and postdevelopment conditions for the 2- and 10- year design storm events.

☑ ☐ ☐ *FACILITY CONFIGURATION and MINIMUM SEPARATIONS*

- ☑ ☐ ☐ Proper length to width ratio (Typically 2H:1V).
- ☑ ☐ ☐ Deep pool areas provided with two benches. Fifteen (15) ft. safety bench outward from normal pool at maximum 6 percent slope and aquatic bench inward from normal shoreline below normal pool.
- ☑ ☐ ☐ Pond buffer 25 feet outward from maximum design WSEL.
- ☑ ☐ ☐ No trees within 15 feet of embankment toe or 25 feet from principal spillway structure.

Yes No N/A

☐ ☐ ☑ Infiltration and filtering system facilities located at least 100 feet horizontally from any water supply well, 100 feet from any downslope buildings and 25 feet from any upslope buildings.

Yes No N/A

☑ ☐ ☐ *HYDRAULIC COMPUTATIONS*

☑ ☐ ☐ Elevation or Stage - Storage curve and tabular data.
☑ ☐ ☐ Weir / Orifice control - extended detention control.
☑ ☐ ☐ Weir / Orifice Control - riser 1-year control for stream protection.
☐ ☐ ☑ Weir / Orifice Control - riser 2 year control for quantity.
☐ ☐ ☑ Weir / Orifice Control - riser 10 year control for quantity.
☑ ☐ ☐ Inlet / Outlet (barrel) control - (all storms).
☑ ☐ ☐ Check for barrel control prior to riser orifice flow to prevent slug flow-water hammer conditions.
☐ ☐ ☑ Emergency spillway capacity and depth of flow. "TOKEN"
☑ ☐ ☐ Elevation - Discharge (Outlet Rating) table and curve. Provide all supporting calculations and/or design assumptions.
☐ ☐ ☑ Adequate channel computations for receiving channel. May be waived if facility is designed based on 1-year, 24 hour stream protection criteria.

☑ ☐ ☐ *POND or RESERVOIR ROUTING*

☑ ☐ ☐ Storage indication routing of ultimate development hydrographs for the 1-, 2-, 10-, and 100-year design storms. Preference is for structure to discharge up to the 10-year storm through the principal spillway and pass the 100-year storm with a minimum 1 foot of freeboard through a combination of principal and emergency spillways. If no emergency spillway is provided (prior approval required), riser must be large enough to pass the design high water flow and trash without overtopping the facility, have 3 square feet or more of cross-sectional area, contain a hood type inlet and have a minimum freeboard of 2 feet. Token spillways are also recommended with minimum 8 ft. width at or above the design 100-year storm elevation.
☐ ☐ ☑ Downstream hydrographs at established study points, if conditions warrant (ie. facility discharge combines with uncontrolled bypass).

☑ ☐ ☐ *MISCELLANEOUS COMPUTATIONS*

☑ ☐ ☐ Water quality volume for permanent pool based on selected BMP treatment volume (WQv).
☑ ☐ ☐ Water quality volume for extended detention based on selected BMP treatment volume (WQv) with drawdown computations.
☑ ☐ ☐ Drawdown computations for the 1-year, 24 hour detention for stream channel protection criteria.
☑ ☐ ☐ Pond drain computations (within 24 hours).
☑ ☐ ☐ Anti-seep collar design. (concrete preferred).
☐ ☐ ☑ Filter diaphragm design (or alternative method of controlling seepage).

Yes	No	N/A	
☑	☐	☐	Riser / base structure flotation analyses. FS = 1.25 minimum.
☐	☐	☑	Downstream danger reach study (if conditions warrant).
☐	☐	☑	Upstream backwater analyses onto offsite adjacent property (if conditions warrant).
☐	☐	☑	100 year floodplain impacts (if conditions warrant).

Yes	No	N/A	
☐	☑	☐	*GEOTECHNICAL REQUIREMENTS*
☐	☑	☐	Geotechnical report with recommendations specific to BMP facility type selected by a registered professional engineer.
☐	☐	☑	Initial Feasibility Testing requirements satisfied as per Appendix E of the James City County Guidelines for Design and Construction of Stormwater Management BMPs manual. (Infiltration, Bioretention and Filtering System BMP types only).
☐	☐	☑	Concept Design Testing requirements satisfied as per Appendix E of the James City County Guidelines for Design and Construction of Stormwater Management BMPs manual. (Infiltration, Bioretention and Filtering System BMP types only).
☐	☑	☐	Minimum Boring locations: borrow area, pool area, principal control structure, top of facility near one abutment or emergency spillway if provided.
☐	☑	☐	Boring logs with Unified Soil Classification (ASTM D2487), soils descriptions and depths to bedrock and the seasonal water table indicated.
☑	☐	☐	Monitoring/inspection of facility required by professional during construction for certification.
☑	☐	☐	*PRINCIPAL SPILLWAY PROFILE AND ASSOCIATED DETAILS*
☑	☐	☐	*EXISTING GROUND AND PROPOSED GRADE*
☑	☐	☐	Embankment or excavation side slopes labeled (3H:1V maximum).
☑	☐	☐	Minimum top width labeled (per VESCH or VSMH requirements).
☐	☑	☐	Removal of unsuitable material under proposed facility (per geotechnical report requirements).
☑	☐	☐	*CORE TRENCH*
☑	☐	☐	Material (per plan or geotechnical report requirements).
☑	☐	☐	Bottom width (4' minimum or greater as dictated by geotechnical report recommendations).
☑	☐	☐	Side slopes (1:1 maximum steepness)
☑	☐	☐	Depth (4' minimum or greater as dictated by geotechnical report recommendations).

Yes No N/A

☑ ☐ ☐ *PRINCIPAL CONTROL STRUCTURE. RISER OR SIMILAR STRUCTURE (DETAILS REQUIRED FOR ALL ITEMS)*

- ☑ ☐ ☐ Durable, resistant material (concrete preferred).
- ☑ ☐ ☐ Riser diameter is at least 1.25 times larger than barrel diameter.
- ☑ ☐ ☐ All pertinent dimensions and elevations shown.
- ☑ ☐ ☐ Control orifice or weir dimensions and elevations shown.
- ☑ ☐ ☐ Trash rack - removable - for each release.
- ☑ ☐ ☐ Anti-vortex device, baffle or plate.
- ☑ ☐ ☐ Riser base structure with dimensions and embedment specifications (concrete preferred).
- ☑ ☐ ☐ Interior access (steps, ladders, etc.) for maintenance for structures over 4 feet in height. Excessively high risers may need some form of exterior access on top portion.
- ☑ ☐ ☐ Low flow orifice with ~~cage type trash rack~~. TURN-DOWN ELBOW

☑ ☐ ☐ *PRINCIPAL CONTROL STRUCTURE OUTLET BARREL*

- ☑ ☐ ☐ Material (ASTM C-361 reinforced concrete pipe) with watertight joints. Prior approval required for all other pipe material (CMP, CPP, PVC, etc.).
- ☑ ☐ ☐ Support and bedding requirements for barrel - concrete cradles, etc. (detail required).
- ☑ ☑ ☐ Pipe inverts, length, size, class and slope shown.
- ☑ ☐ ☐ Flared end section or endwall provided on barrel outlet.

☑ ☐ ☐ *SEEPAGE CONTROL*

- ☐ ☐ ☐ Phreatic line shown (4:1 slope measured from the intersection of the embankment and the principal spillway design high water).
- ☑ ☐ ☐ *ANTI-SEEP COLLARS*
  - ☑ ☐ ☐ Anti-seep collar, concrete preferred (detail required).
  - ☑ ☐ ☐ Size - 15 percent increase in length of saturation using outside pipe diameter.
  - ☑ ☐ ☐ Spacing and location on barrel (located at least 2 feet from a pipe joint).
- ☐ ☐ ☑ *FILTER DIAPHRAGM*
  - ☐ ☐ ☑ Design based on latest NRCS design methods and certified by a professional engineer.

Yes No N/A

☑ ☐ ☐ *ELEVATION AND DIMENSIONAL DESIGN DATA*

- ☑ ☐ ☐ Top of facility - construction height and settled height (10 percent settlement).
- ☑ ☐ ☐ Crest of emergency spillway.
- ☑ ☐ ☐ Crest of principal control (riser) structure.
- ☑ ☐ ☐ Inverts of control release orifices, weirs, tubes, etc.
- ☑ ☐ ☐ Pools: permanent; extended detention; 1-year; 2-year; 10-year; 100-year; and appropriate safety storms.
- ☑ ☐ ☐ Crest of principal control structure spillway at least one (1) foot below crest of emergency spillway, if provided.
- ☑ ☐ ☐ Minimum freeboard of one (1) foot above the 100-year design high water elevation for facilities <u>with</u> an emergency spillway.
- ☐ ☐ ☑ Minimum freeboard of two (2) feet above the 100-year design high water elevation for facilities <u>without</u> an emergency spillway or in accordance with the SCS National Engineering Handbook (prior approval required).
- ☑ ☐ ☐ Inlet and outlet invert shown for all barrels (with slopes in percent).
- ☑ ☐ ☐ Basin clean out elevation from maintenance plan.

☑ ☐ ☐ *CROSS SECTION THROUGH FACILITY ALONG CENTERLINE*

- ☑ ☐ ☐ Existing Ground.
- ☑ ☐ ☐ Proposed grade.
- ☑ ☐ ☐ Top of facility - constructed and settled.
- ☑ ☐ ☐ Location of emergency spillway with side slopes labeled (emergency spillway in cut).
- ☑ ☐ ☐ Bottom of core trench (4' minimum).
- ☐ ☑ ☐ Location of each soil boring.
- ☑ ☐ ☐ Barrel location.
- ☑ ☐ ☐ Existing and proposed utility location/protection.

☐ ☐ ☑ *EMERGENCY SPILLWAY PROFILE*

- ☐ ☐ ☑ Existing ground.
- ☐ ☐ ☑ Inlet, level (control) and outlet sections per SCS.
- ☐ ☐ ☑ Spillway and crest elevations.

☑ ☐ ☐ *PRETREATMENT DEVICES* properly designed based on required pretreatment volumes for the selected County BMP facility type. Including, but not limited to: <u>sediment forebays,</u> sediment basins, sumps, grass channels, gravel diaphragms, plunge pools, chamber separators or other acceptable methods.

Yes No N/A

☑ ☐ ☐ *CONSTRUCTION SPECIFICATIONS and NOTES*

- ☑ ☐ ☐ Anticipated sequence of construction for BMP (consistent with erosion and sediment control plan).
- ☑ ☐ ☐ Provisions to control base stream or storm flow conditions encountered during construction.
- ☑ ☐ ☐ Site and subgrade preparation requirements.
- ☑ ☐ ☐ Embankment, fill and backfill material soil and placement (lift) thickness requirements.
- ☑ ☐ ☐ Compaction and soil moisture content requirements..
- ☑ ☐ ☐ Storm drain, underdrain and pipe conduit requirements.
- ☑ ☐ ☐ Minimum depth of pipe cover for temporary (construction) and final cover conditions.
- ☑ ☐ ☐ Permanent shutoff valve and pond drain.
- ☑ ☐ ☐ Concrete for structural components.
- ☑ ☐ ☐ Riprap and slope protection.
- ☑ ☐ ☐ Temporary and permanent stabilization measures.
- ☐ ☐ ☑ Temporary safety measures and permanent fencing.
- ☑ ☐ ☐ BMP Landscaping (deep, shallow, fringe, perimeter,etc.)
- ☐ ☐ ☑ Dust and traffic control (if warranted).
- ☑ ☐ ☐ Construction monitoring and certification by professional.

☑ ☐ ☐ *MAINTENANCE PROVISIONS*

- ☑ ☐ ☐ Person or organization responsible for maintenance.
- ☑ ☐ ☐ Inspection and maintenance agreement executed.
- ☑ ☐ ☐ Maintenance Plan which outlines the long-term schedule for inspection and maintenance of the facility and forebays, if provided.
- ☑ ☐ ☐ Maintenance access from public right-of-way or publicly traveled road.
- ☑ ☐ ☐ Maintenance easement minimum 15 feet around 100-year pool elevation (25 feet recommended).
- ☑ ☐ ☐ Fence or minimum 6 foot wide public safety shelf.

IV. *OUTLET PROTECTIONS:*

Yes No N/A

- ☑ ☐ ☐ Sized for maximum design release (generally 10-year storm).
- ☑ ☐ ☐ Flared end section or endwall.
- ☑ ☐ ☐ Outlet protection dimensions.
- ☑ ☐ ☐ Slope at 0 percent (Level Grade).
- ☑ ☐ ☐ Riprap size and quantity.
- ☑ ☐ ☐ Riprap placement thickness (1.5 Times Maximum Stone Diameter)
- ☑ ☐ ☐ Geotextile lining (nonwoven).
- ☐ ☐ ☑ Special energy dissipators are required for design discharge velocities that exceed eighteen (18) feet per second; or if use of standard outlet protection would result in velocities exceeding permissible channel velocities: or if space restricts or limits their use.

V. *ADDITIONAL COMMENTS OR INFORMATION SPECIFIC TO THE PLAN:*

Prepared By: Robert Warnom

Date: 7/3/01

SWMProg/BMP/Checklist/chklst.0

Adequate Channel Analysis
Ironbound Village
July 5, 2001
Project No. 8914-01

CHANNEL GEOMETRY (SS #8)

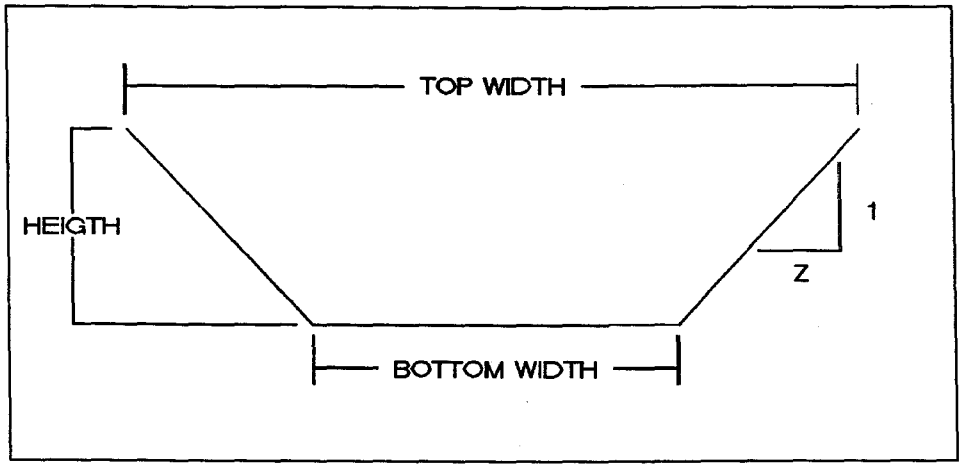

BOTTOM WIDTH =	1	FT
HEIGHT =	1.5	FT
Z =	3.0	FT
SLOPE (S)	0.03	FT/FT
MANNING'S N	0.03	Per VDOT Drainage Main

SOIL TYPE

SANDY LOAM

MAX. PERMISSIBLE VELOCITY = 2.5 FT /SEC

2-YEAR STORM EVENT

TIME OF CONCENTRATION	5 MIN.	
RAINFALL INTENSITY =	5.5	
RUNOFF COEF. =	0.8	
DRAINAGE AREA =	0.45 AC.	
PEAK FLOW RATE =	**1.98 CFS**	(Q = CIA)
PEAK VELOCITY =	**2.50 CFS**	(SEE FOLLOWING TABLE) ok

*** VELOCITY FOR POST DEVELOPMENT 2-YEAR STORM IS LESS THAN OR EQUAL TO MAXIMUM PERMISSIBLE VELOCITY OF 2.50 CFS, THEREFORE, CHANNEL IS ADEQUATE.**

Incremental Depth (FT)	Area (SQ FT)	WP (FT)	Hydraulic Radius (FT)	Velocity (FT/SEC)	Flow (CFS)	
0.00	0.00	1.00	0.00	0.00	0.00	
0.10	0.00	1.63	0.00	0.13	0.00	
0.20	0.02	2.26	0.01	0.42	0.01	
0.30	0.08	2.90	0.03	0.79	0.06	
0.40	0.19	3.53	0.05	1.23	0.24	
0.50	0.38	4.16	0.09	1.73	0.65	
0.60	0.65	4.79	0.14	2.27	1.47	
0.63	0.73	4.95	0.15	2.41	1.76	
0.64	0.79	5.06	0.16	2.50	1.98	<-----
0.65	0.82	5.11	0.16	2.55	2.10	
0.70	1.03	5.43	0.19	2.84	2.92	
0.80	1.54	6.06	0.25	3.45	5.29	
0.90	2.19	6.69	0.33	4.08	8.93	
1.00	3.00	7.32	0.41	4.74	14.23	

10-YEAR STORM EVENT

TIME OF CONCENTRATION	5 MIN.	
RAINFALL INTENSITY =	7.0	
RUNOFF COEF. =	0.8	
DRAINAGE AREA =	0.45 AC.	
PEAK FLOW RATE =	**2.52 CFS**	(Q = CIA)
DEPTH =	**0.68 FT**	(SEE FOLLOWING TABLE) <1' ok

*** INCREMENTAL DEPTH FOR POST DEVELOPMENT 10-YEAR STORM IS LESS THAN THE HEIGHT OF THE CHANNEL, THEREFORE, CHANNEL IS ADEQUATE.**

Incremental Depth (FT)	Area (SQ FT)	WP (FT)	Hydraulic Radius (FT)	Velocity (FT/SEC)	Flow (CFS)	
0.00	0.00	1.00	0.00	0.00	0.00	
0.10	0.00	1.63	0.00	0.13	0.00	
0.20	0.02	2.26	0.01	0.42	0.01	
0.30	0.08	2.90	0.03	0.79	0.06	
0.40	0.19	3.53	0.05	1.23	0.24	
0.50	0.38	4.16	0.09	1.73	0.65	
0.60	0.65	4.79	0.14	2.27	1.47	
0.65	0.82	5.11	0.16	2.55	2.10	
0.67	0.90	5.24	0.17	2.66	2.40	
0.68	0.93	5.28	0.18	2.70	2.52	<----
0.70	1.03	5.43	0.19	2.84	2.92	
0.80	1.54	6.06	0.25	3.45	5.29	
0.90	2.19	6.69	0.33	4.08	8.93	
1.00	3.00	7.32	0.41	4.74	14.23	

Adequate Channel Analysis
Ironbound Village
July 5, 2001
Project No. 8914-01

CHANNEL GEOMETRY (SS #6A)

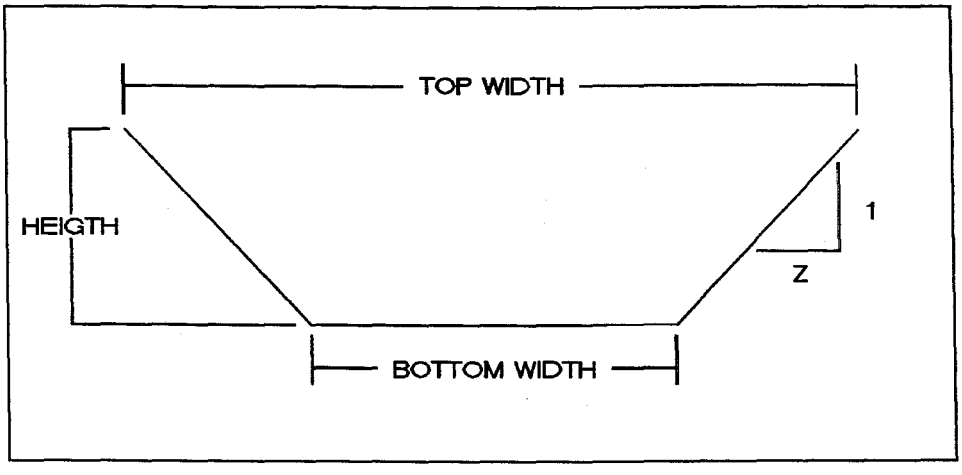

BOTTOM WIDTH =	1	FT
HEIGHT =	1.5	FT
Z =	3.0	FT
SLOPE (S)	0.01	FT/FT
MANNING'S N	0.03	Per VDOT Drainage Main

SOIL TYPE

SANDY LOAM

MAX. PERMISSIBLE VELOCITY = **2.5 FT /SEC**

2-YEAR STORM EVENT

TIME OF CONCENTRATION	5 MIN.	
RAINFALL INTENSITY =	5.5	
RUNOFF COEF. =	0.5	
DRAINAGE AREA =	0.63 AC.	
PEAK FLOW RATE =	**1.73 CFS**	(Q = CIA)
PEAK VELOCITY =	**1.65 CFS**	(SEE FOLLOWING TABLE) OK

*** VELOCITY FOR POST DEVELOPMENT 2-YEAR STORM IS LESS THAN OR EQUAL TO MAXIMUM PERMISSIBLE VELOCITY OF 2.50 CFS, THEREFORE, CHANNEL IS ADEQUATE.**

Incremental Depth (FT)	Area (SQ FT)	WP (FT)	Hydraulic Radius (FT)	Velocity (FT/SEC)	Flow (CFS)	
0.00	0.00	1.00	0.00	0.00	0.00	
0.10	0.00	1.63	0.00	0.07	0.00	
0.20	0.02	2.26	0.01	0.24	0.01	
0.30	0.08	2.90	0.03	0.46	0.04	
0.40	0.19	3.53	0.05	0.71	0.14	
0.50	0.38	4.16	0.09	1.00	0.37	
0.60	0.65	4.79	0.14	1.31	0.85	
0.70	1.03	5.43	0.19	1.64	1.69	
0.70	1.05	5.45	0.19	1.65	1.73	<-----
0.71	1.07	5.49	0.20	1.67	1.80	
0.75	1.27	5.74	0.22	1.81	2.29	
0.80	1.54	6.06	0.25	1.99	3.06	
0.90	2.19	6.69	0.33	2.36	5.15	
1.00	3.00	7.32	0.41	2.74	8.22	

10-YEAR STORM EVENT

TIME OF CONCENTRATION	5 MIN.	
RAINFALL INTENSITY =	7.0	
RUNOFF COEF. =	0.5	
DRAINAGE AREA =	0.63 AC.	
PEAK FLOW RATE =	**2.21 CFS**	(Q = CIA)
DEPTH =	**0.74 FT**	(SEE FOLLOWING TABLE) <1' ok

*** INCREMENTAL DEPTH FOR POST DEVELOPMENT 10-YEAR STORM IS LESS THAN THE HEIGHT OF THE CHANNEL, THEREFORE, CHANNEL IS ADEQUATE.**

Incremental Depth (FT)	Area (SQ FT)	WP (FT)	Hydraulic Radius (FT)	Velocity (FT/SEC)	Flow (CFS)	
0.00	0.00	1.00	0.00	0.00	0.00	
0.10	0.00	1.63	0.00	0.07	0.00	
0.20	0.02	2.26	0.01	0.24	0.01	
0.30	0.08	2.90	0.03	0.46	0.04	
0.40	0.19	3.53	0.05	0.71	0.14	
0.50	0.38	4.16	0.09	1.00	0.37	
0.60	0.65	4.79	0.14	1.31	0.85	
0.70	1.03	5.43	0.19	1.64	1.69	
0.74	1.22	5.68	0.21	1.78	2.16	
0.74	1.24	5.71	0.22	1.79	2.21	<-----
0.75	1.27	5.74	0.22	1.81	2.29	
0.80	1.54	6.06	0.25	1.99	3.06	
0.90	2.19	6.69	0.33	2.36	5.15	
1.00	3.00	7.32	0.41	2.74	8.22	

Adequate Channel Analysis
Ironbound Village
July 5, 2001
Project No. 8914-01

CHANNEL GEOMETRY (SS #12)

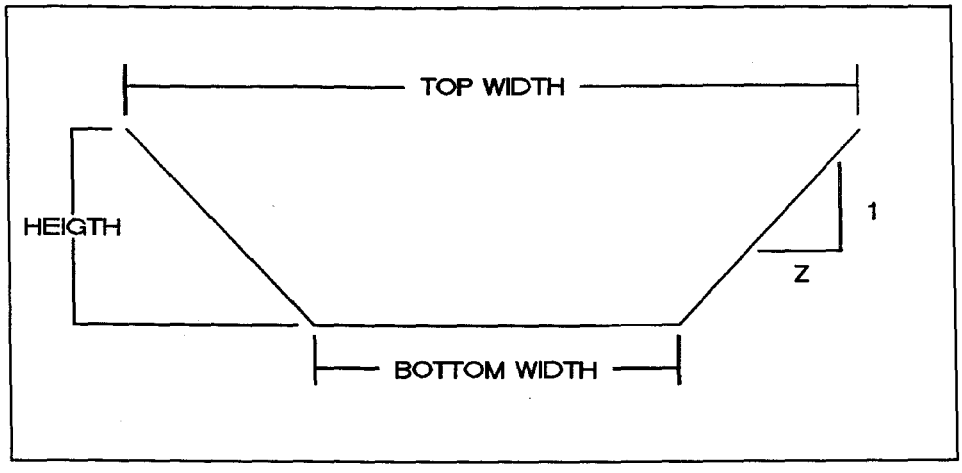

BOTTOM WIDTH =	1	FT
HEIGHT =	1.5	FT
Z =	3.0	FT
SLOPE (S)	0.015	FT/FT
MANNING'S N	0.03	Per VDOT Drainage Main

SOIL TYPE

SANDY LOAM

MAX. PERMISSIBLE VELOCITY = **2.5 FT /SEC**

2-YEAR STORM EVENT

TIME OF CONCENTRATION	5 MIN.	
RAINFALL INTENSITY =	5.5	
RUNOFF COEF. =	0.5	
DRAINAGE AREA =	0.45 AC.	
PEAK FLOW RATE =	**1.24 CFS**	(Q = CIA)
PEAK VELOCITY =	**1.70 CFS**	(SEE FOLLOWING TABLE) < 2 OK

*** VELOCITY FOR POST DEVELOPMENT 2-YEAR STORM IS LESS THAN OR EQUAL TO MAXIMUM PERMISSIBLE VELOCITY OF 2.50 CFS, THEREFORE, CHANNEL IS ADEQUATE.**

Incremental Depth (FT)	Area (SQ FT)	WP (FT)	Hydraulic Radius (FT)	Velocity (FT/SEC)	Flow (CFS)	
0.00	0.00	1.00	0.00	0.00	0.00	
0.10	0.00	1.63	0.00	0.09	0.00	
0.20	0.02	2.26	0.01	0.29	0.01	
0.30	0.08	2.90	0.03	0.56	0.05	
0.40	0.19	3.53	0.05	0.87	0.17	
0.50	0.38	4.16	0.09	1.22	0.46	
0.60	0.65	4.79	0.14	1.60	1.04	
0.62	0.73	4.95	0.15	1.70	1.24	<-----
0.63	0.75	4.98	0.15	1.72	1.29	
0.65	0.82	5.11	0.16	1.80	1.48	
0.70	1.03	5.43	0.19	2.01	2.07	
0.80	1.54	6.06	0.25	2.44	3.74	
0.90	2.19	6.69	0.33	2.89	6.31	
1.00	3.00	7.32	0.41	3.35	10.06	

10-YEAR STORM EVENT

TIME OF CONCENTRATION	5 MIN.	
RAINFALL INTENSITY =	7.0	
RUNOFF COEF. =	0.5	
DRAINAGE AREA =	0.45 AC.	
PEAK FLOW RATE =	**1.58 CFS**	(Q = CIA)
DEPTH =	**0.66 FT**	(SEE FOLLOWING TABLE) < 1' ok

*** INCREMENTAL DEPTH FOR POST DEVELOPMENT 10-YEAR STORM IS LESS THAN THE HEIGHT OF THE CHANNEL, THEREFORE, CHANNEL IS ADEQUATE.**

Incremental Depth (FT)	Area (SQ FT)	WP (FT)	Hydraulic Radius (FT)	Velocity (FT/SEC)	Flow (CFS)	
0.00	0.00	1.00	0.00	0.00	0.00	
0.10	0.00	1.63	0.00	0.09	0.00	
0.20	0.02	2.26	0.01	0.29	0.01	
0.30	0.08	2.90	0.03	0.56	0.05	
0.40	0.19	3.53	0.05	0.87	0.17	
0.50	0.38	4.16	0.09	1.22	0.46	
0.60	0.65	4.79	0.14	1.60	1.04	
0.65	0.82	5.11	0.16	1.80	1.48	
0.66	0.86	5.17	0.17	1.84	1.58	<-----
0.67	0.90	5.24	0.17	1.88	1.70	
0.70	1.03	5.43	0.19	2.01	2.07	
0.80	1.54	6.06	0.25	2.44	3.74	
0.90	2.19	6.69	0.33	2.89	6.31	
1.00	3.00	7.32	0.41	3.35	10.06	

Hydraflow Storm Sewer Tabulation

Station Line	Station To Line	Len (ft)	Drng Area Incr (ac)	Drng Area Total (ac)	Rnoff coeff (C)	Area x C Incr	Area x C Total	Tc Inlet (min)	Tc Syst (min)	Rain (I) (in/hr)	Total flow (cfs)	Cap full (cfs)	Vel (ft/s)	Pipe Size (in)	Pipe Slope (%)	Invert Elev Up (ft)	Invert Elev Dn (ft)	HGL Elev Up (ft)	HGL Elev Dn (ft)	Grnd / Rim Elev Up (ft)	Grnd / Rim Elev Dn (ft)	Line ID
22	21	43' ~~50.0~~	0.40	0.40	0.40	0.16	0.16	5.0	5.0	7.1	1.14	15.63	2.25	15	6.81 ~~5.86~~	95.18	92.25	95.61	93.03	98.68	95.00	13 TO 12
21	20	22.0	0.45	0.85	0.50	0.22	0.38	5.0	5.9	6.9	2.65	4.57	3.91	15	0.50	92.00	91.89	92.70	92.55	95.00	98.13	12 TO 11
20	18	138.0	0.00	0.85	0.00	0.00	0.38	5.0	6.1	6.8	2.63	8.04	3.50	15	1.55	91.64	89.50	92.29	90.36	98.13	93.71	11 TO 10
19	18	23.0	0.16	0.16	0.85	0.14	0.14	5.0	5.0	7.1	0.97	13.80	2.00	15	4.57	90.55	89.50	90.94	90.36	94.55	93.71	10A TO 10
18	16	60.0	0.00	1.01	0.00	0.00	0.52	5.0	7.1	6.6	3.43	6.29	3.18	15	0.95	89.25	88.68	90.16	90.05	93.71	92.69	10 TO 9A
17	16	34.0	0.31	0.31	0.50	0.16	0.16	5.0	5.0	7.1	1.10	4.57	0.90	15	0.50	88.85	88.68	90.06	90.05	92.85	92.69	9B TO 9A
16	15	65.0	0.31	1.63	0.75	0.23	0.91	5.0	7.5	6.5	5.91	8.21	5.29	15	1.62	88.43	87.38	89.40	88.67	92.69	92.40	9A TO 9
15	7	102.0	0.33	1.96	0.75	0.25	1.16	5.0	7.7	6.5	7.46	11.48	4.39	18	1.20	87.13	85.91	88.44	87.99	92.40	90.16	9 TO 3
14	13	25.0	0.73	0.73	0.50	0.37	0.37	5.0	5.0	7.1	2.60	20.05	4.07	15	9.64	93.50	91.09	94.15	91.74	95.00	94.84	8 TO 7
13	11	84.0	0.00	0.73	0.00	0.00	0.37	5.0	5.2	7.1	2.58	10.52	3.37	15	2.65	90.84	88.61	91.48	89.53	94.84	92.62	7 TO 6
12	11	110.0	0.63	0.63	0.50	0.31	0.31	5.0	5.0	7.1	2.24	11.34	3.09	15	3.08	92.00	88.61	92.60	89.53	95.00	92.62	6A TO 6
11	9	84.0	0.00	1.36	0.00	0.00	0.68	5.0	6.0	6.9	4.66	12.29	3.77	18	1.37	88.36	87.21	89.18	88.52	92.62	91.76	6 TO 5
10	9	34.0	0.32	0.32	0.50	0.16	0.16	5.0	5.0	7.1	1.14	4.57	0.95	15	0.50	87.38	87.21	88.53	88.52	91.92	91.76	5A TO 5
9	8	71.0	0.68	2.36	0.50	0.34	1.18	5.0	6.5	6.7	7.94	16.11	3.29	24	0.51	86.96	86.60	88.26	88.22	91.76	91.53	5 TO 4
8	7	80.0	0.45	2.81	0.80	0.36	1.54	5.0	7.0	6.6	10.18	21.01	3.35	24	0.86	86.35	85.66	88.13	87.99	91.53	90.16	4 TO 3
7	1	34.0	0.54	5.31	0.55	0.30	2.99	5.0	8.1	6.4	19.05	31.99	7.31	24	2.00	85.41	84.73	86.96	86.28	90.16	90.32	3 TO 2
6	5	355.0	0.19	0.19	0.85	0.16	0.16	5.0	5.0	7.1	1.15	1.92	4.02	8	2.54 4.5%	92.00	83.00	92.51	83.51	95.70	85.00 ~~91.00~~	1G TO 1F
5	End	90.0	0.00	0.19	0.00	0.00	0.16	5.0	6.8	6.7	1.08	13.53	3.23	12	14.44	83.00	70.00	83.44	70.44	85.0 91.00	73.00	1F TO 1E
4	3	160.0	0.19	0.19	0.85	0.16	0.16	5.0	5.0	7.1	1.15	2.42	3.94	8	4.00	94.00	87.60	94.51	88.13	97.00	94.00	1D TO 1C
3	2	190.0	0.00	0.19	0.00	0.00	0.16	5.0	5.8	6.9	1.12	2.42	3.93	8	4.00	87.60	80.00	88.10	80.51	94.00	84.00	1C TO 1B
2	End	95.0	0.00	0.19	0.00	0.00	0.16	5.0	6.8	6.7	1.08	11.55	3.23	12	10.53	80.00	70.00	80.44	70.44	84.00	73.00	1B TO 1A

Less than 2 FPS

Project File: SSDC.stm | IDF File: JCCstormsewer.IDF | Total number of lines: 22 | Run Date: 07-05-2001

NOTES: Intensity = 143.72 / (Inlet time + 19.20) ^ 0.94; Return period = 10 Yrs. ; Initial tailwater elevation = 77.00 (ft)

0.11 AC LOTS 0.45

Hydraflow Storm Sewer Tabulation

Station		Len	Drng Area		Rnoff coeff	Area x C		Tc		Rain (I)	Total flow	Cap full	Vel	Pipe		Invert Elev		HGL Elev		Grnd / Rim Elev		Line ID
Line	To Line	(ft)	Incr (ac)	Total (ac)	(C)	Incr	Total	Inlet (min)	Syst (min)	(in/hr)	(cfs)	(cfs)	(ft/s)	Size (in)	Slope (%)	Up (ft)	Dn (ft)	Up (ft)	Dn (ft)	Up (ft)	Dn (ft)	
1	End	94.0	0.44	5.75	0.55	0.24	3.24	5.0	8.2	6.3	20.53	31.99	6.53	24	2.00	71.88	70.00	77.77	77.00	90.16 90.32	73.00	2 TO 1

Project File: SSDC.stm | IDF File: JCCstormsewer.IDF | Total number of lines: 22 | Run Date: 07-05-2001

NOTES: Intensity = 143.72 / (Inlet time + 19.20) ^ 0.94; Return period = 10 Yrs. ; Initial tailwater elevation = 77.00 (ft)

Hydraflow Plan View

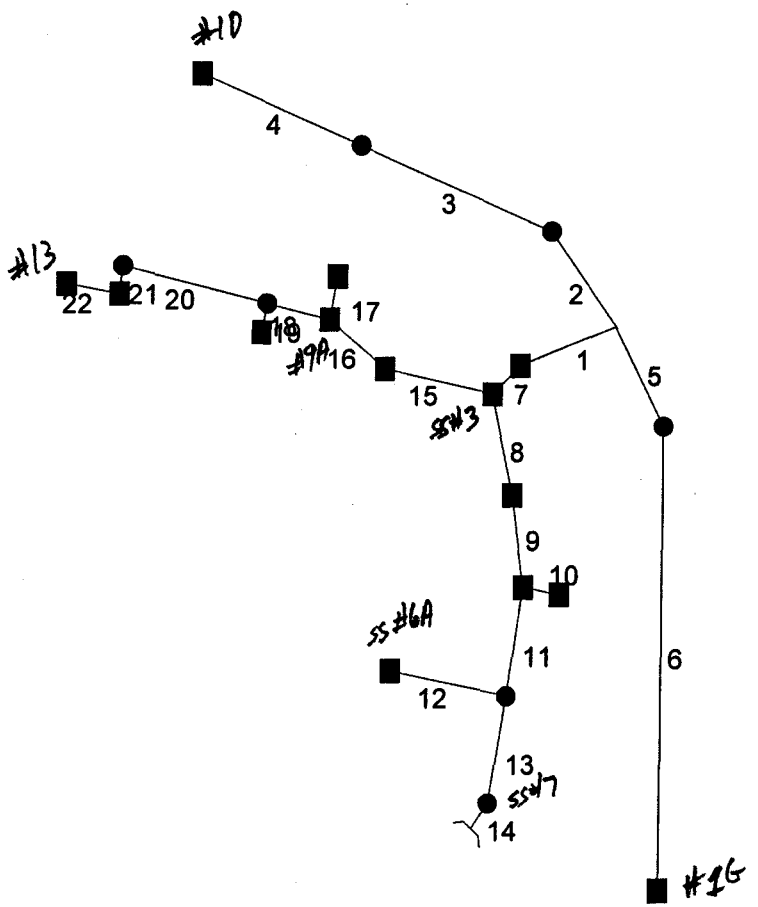

Project file: SSDC.stm	IDF file: JCCstormsewer.IDF	No. Lines: 22	07-03-2001

Hydraflow Inlet Report

Line No	Inlet ID	Q = CIA (cfs)	Q carry (cfs)	Q capt (cfs)	Q byp (cfs)	Junc type	Curb Inlet		Grate Inlet			Gutter							Inlet			Byp line No
							Ht (in)	L (ft)	area (sqft)	L (ft)	W (ft)	So (ft/ft)	W (ft)	Sw (ft/ft)	Sx (ft/ft)	n	depth (ft)	spread (ft)	depth (ft)	spread (ft)	Dep (in)	
22	#13 DI-7	0.64	0.00	0.64	0.00	DrGrt	0.0	0.00	2.12	3.40	3.00	Sag	2.00	0.330	0.330	0.000	0.08	3.48	0.08	3.48	0.0	Off
21	#12 DI-7	0.90	0.00	0.90	0.00	DrGrt	0.0	0.00	2.12	3.40	3.00	Sag	2.00	0.330	0.330	0.000	0.10	3.61	0.10	3.61	0.0	Off
20	#11 MH	0.00	0.00	0.00	0.00	MH	0.0	0.00	0.00	0.00	0.00	0.000	0.00	0.000	0.000	0.013	0.00	0.00	0.00	0.00	0.0	18
19	#10A DI-3A	0.54	0.00	0.29	0.25	Curb	6.0	3.00	0.00	0.00	0.00	0.040	2.00	0.083	0.020	0.013	0.14	1.69	0.16	1.55	2.00	Off
18	#10 MH	0.00	0.00	0.00	0.00	MH	0.0	0.00	0.00	0.00	0.00	0.000	0.00	0.000	0.000	0.013	0.00	0.00	0.00	0.00	0.0	16
17	#9B DI-3B	0.62	0.00	0.46	0.16	Curb	6.0	4.00	0.00	0.00	0.00	0.017	2.00	0.083	0.020	0.013	0.18	2.70	0.19	1.84	2.00	4
16	#9A DI-3B	0.93	0.00	0.61	0.32	Curb	6.0	4.00	0.00	0.00	0.00	0.017	2.00	0.083	0.020	0.013	0.20	3.70	0.22	2.67	2.00	7
15	#9 DI-3B	0.99	0.00	0.62	0.37	Curb	6.0	4.00	0.00	0.00	0.00	0.020	2.00	0.083	0.020	0.013	0.20	3.70	0.22	2.67	2.00	Off
14	#8 ES-1	1.45	0.00	1.45	0.00	Hdwl	0.0	0.00	0.00	0.00	0.00	Sag	0.00	0.000	0.000	0.000	0.00	0.00	0.00	0.00	0.0	13
13	#7 MH	0.00	0.00	0.00	0.00	MH	0.0	0.00	0.00	0.00	0.00	0.000	0.00	0.000	0.000	0.013	0.00	0.00	0.00	0.00	0.0	11
12	#6A DI-7	1.26	0.00	1.26	0.00	DrGrt	0.0	0.00	2.12	3.40	3.00	Sag	2.00	0.330	0.330	0.000	0.13	3.76	0.13	3.76	0.0	Off
11	#6 MH	0.00	0.00	0.00	0.00	MH	0.0	0.00	0.00	0.00	0.00	0.000	0.00	0.000	0.000	0.013	0.00	0.00	0.00	0.00	0.0	9
10	#5A DI-3B	0.64	0.00	0.52	0.12	Curb	6.0	4.00	0.00	0.00	0.00	0.010	2.00	0.083	0.020	0.013	0.20	3.70	0.21	2.17	2.00	1
9	#5 DI-3B	1.35	0.00	1.13	0.22	Curb	6.0	6.00	0.00	0.00	0.00	0.010	2.00	0.083	0.020	0.013	0.25	6.20	0.27	5.17	2.00	7
8	#4 DI-3B	1.43	0.00	1.06	0.38	Curb	6.0	6.00	0.00	0.00	0.00	0.022	2.00	0.083	0.020	0.013	0.22	4.70	0.25	4.17	2.00	Off
7	#3 DI-3C	1.18	0.54	1.72	0.00	Curb	6.0	8.00	0.00	0.00	0.00	Sag	2.00	0.083	0.020	0.000	0.29	7.97	0.33	7.97	2.00	Off
6	#1G DI-7	0.64	0.00	0.64	0.00	DrGrt	0.0	0.00	2.12	3.40	3.00	Sag	2.00	0.050	0.050	0.000	0.08	6.21	0.08	6.21	0.0	5
5	#1F MH	0.00	0.00	0.00	0.00	MH	0.0	0.00	0.00	0.00	0.00	0.000	0.00	0.000	0.000	0.013	0.00	0.00	0.00	0.00	0.0	Off
4	#1D DI-7	0.64	0.16	0.80	0.00	DrGrt	0.0	0.00	2.12	3.40	3.00	Sag	2.00	0.050	0.050	0.000	0.09	6.71	0.09	6.71	0.0	3
3	#1C MH	0.00	0.00	0.00	0.00	MH	0.0	0.00	0.00	0.00	0.00	0.000	0.00	0.000	0.000	0.013	0.00	0.00	0.00	0.00	0.0	2
2	#1B MH	0.00	0.00	0.00	0.00	MH	0.0	0.00	0.00	0.00	0.00	0.000	0.00	0.000	0.000	0.013	0.00	0.00	0.00	0.00	0.0	Off
1	#2 DI-3CC	0.96	0.12	1.08	0.00	Curb	6.0	8.00	0.00	0.00	0.00	Sag	2.00	0.083	0.020	0.000	0.24	5.84	0.28	5.84	2.00	Off

Project File: SSDC.stm | I-D-F File: VDOT_4IN-HR_STM.IDF | Total number of lines: 22 | Run Date: 07-05-2001

NOTES: Inlet N-Values = 0.013 ; Intensity = 3.96 / (Inlet time + 0.10) ^ 0.00; Return period = 1 Yrs. ; * Indicates Known Q added

ENVIRONMENTAL DIVISION REVIEW COMMENTS
IRONBOUND VILLAGE PHASE I (23 Lots)
COUNTY PLAN NO. S - 36 - 01
April 25, 2001

mdw/SJT

General Comments:

1. A Land Disturbing Permit and Siltation Agreement, with surety, are required for this project.

2. A Subdivision Agreement, with surety, shall be executed with the County prior to recordation of lots.

3. Water and sewer inspection fees must be paid prior to the issuance of a Land Disturbing Permit.

4. An Inspection/Maintenance Agreement shall be executed with the County for the BMP facility for this project.

5. A streetlight rental fee for 5 lights must be paid prior to the recordation of the subdivision plat.

6. VPDES. It appears land disturbance for both portions of the project (Phases I and II) may exceed five acres. Therefore, it is the owners responsibility to register for a General Virginia Pollutant Discharge Elimination System (VPDES) Permit for Discharges of Stormwater from Construction Activities, in accordance with current requirements of the Virginia Department of Environmental Quality and 9 VAC 25-180-10 et seq. Contact the Tidewater Regional Office of the DEQ at (757) 518-2000 or the Central Office at (804) 698-4000 for further information.

7. Site Tabulation. Provide an impervious cover estimate for the subdivision phase of the project.

8. Drainage Easements. All drainage easements within the subdivision shall remain private, dedicated to an HOA or similar responsible entity.

Chesapeake Bay Preservation:

9. Impervious Cover. It is unclear if the subdivision and site plan sites (Phase I and II) in combination, maintain an impervious cover value of less than 60 percent in accordance with Section 23-9 of the Chesapeake Bay Preservation ordinance.

Erosion & Sediment Control Plan:

10. Design Checklist. Please provide a standard James City County Erosion and Sediment Control and Stormwater Management Design Plan Checklist.

11. Temporary Stockpile Areas. Show any temporary soil stockpile, staging and equipment storage areas (with required erosion and sediment controls) or indicate on the plans that none are anticipated for the project site. The sequence of construction states that the topsoil will be stripped but there is no stockpile location shown.

12. Offsite Land Disturbing Areas. Identify any offsite land disturbing areas including borrow, waste, or disposal sites (with required erosion and sediment controls) or indicate on the plans that none are anticipated for this project.

13. Site Features. Provide existing topography downstream of the BMP to clearly define the area between the BMP outlet and the existing stream and along the existing stream to the downstream pump station.

14. Limit of Clearing. Adjust limits of clearing to include offsite sanitary sewer installation.

15. Narrative. Provide a brief erosion and sediment control and stormwater management plan narrative in accordance with VESCH and County checklist requirements.

16. Sequence of Construction. Installation of the temporary sediment basin will require an extreme amount of cut and earthmoving (stockpiling) prior to use as a primary site control. As this installation is early on in the construction sequence, the installation of perimeter diversion dikes cannot take place until the sediment basin is in place and functional, otherwise there is no place for intercepted site runoff to be conveyed and controlled. Therefore, Step 4 in the construction sequence must precede installation of diversion dikes in Step 2.

17. Diversion Dikes. On the Phase I E&SC plan, the diversion dike along the east side of the project, near offsite Lots 16-18 at Belen Heights Subdivision, traverses to a low topography point. Onsite drainage cannot be physically conveyed to the temporary sediment basin as the diversion dike would need to run uphill. A temporary sediment trapping facility would need to be installed at the low topography area to provide adequate perimeter control for the southeast corner of the site.

18. Diversion Dikes. Runoff from perimeter diversion dikes need to be adequately conveyed into the temporary sediment basin using temporary slope drains, stormwater conveyance channels or stabilized outlets. Runoff should not be conveyed in a concentrated fashion across the TSB's graded sideslopes. *(Note: On Sheet 9, the diversion dikes are currently shown along the top ridge of the basin with no effective method to convey runoff into the basin.)*

19. Silt Fences. Adjust site silt fences to coincide with the defined limit of work (clearing and grading), especially around the temporary sediment basin. Remove the silt fence from across the pond's emergency spillway.

20. Stormwater Conveyance Channels. Label the dot-dashed line (ditch centerline) going to storm drain structures SS # 8, SS # 6B and SS # 12 appropriately as stormwater conveyance channels. Provide supporting design computations and a typical section or construction information as appropriate for these three onsite channels. Include slope, channel configuration, side slopes, lining, etc.

21. E&SC Measures. Provide inlet protections and rock check dams on the plan as called for in the Step 8 of the sequence of construction.

22. Outlet Protections. In accordance with Step 8 of the sequence of construction and the VESCH, provide riprap outlet protection for storm drain system outfalls into the BMP and at the outfall end of the BMP barrel. Specify riprap class and thickness, pad dimensions and amount of stone to be used. *(Note: Design velocities at storm drain outfalls SS # 1A and SS # 1 are quite excessive at 21.5 fps and 10.21 feet per second respectively. The dissipator at SS # 1A may require a special design structure).*

23. E&SC Details. Provide specific details necessary for the temporary sediment basin per VESCH Minimum Standard 3.14. Provide details for all other primary structural erosion control measures being utilized for the site; or alternatively, if the details are non-modified or standard duplication from the handbook provide adequate reference to applicable minimum standards of the VESCH.

24. Temporary Sediment Basin. Submit a Sediment Basin Design Data Sheet to ensure design is in accordance with Minimum Standard 3.14 of the VESCH. Since installation will be a first step measure, provide details as necessary to modify the BMP riser for use during construction.

25. Channel Adequacy. The current design plan utilizes two small size HDPE collection lines to collect roof drain runoff from the home sites. If these conveyance systems are eliminated from the design plan, then channel adequacy computations in accordance with MS # 19 would be required for the offsite drainage channels that would receive drainage from Lots 8-15 and Lots 16-23.

Uncontrolled backlot drainage can not cause a drainage problem within the existing offsite channels or at existing properties to the north (n/f W.H. Lewis) or to the east (n/f Belen Heights Subdivision).

Stormwater Management / Drainage:

26. Open Space Credit. The BMP worksheet shows 1.43 points were taken for natural open space credit based on 1.11 acres (or 14.32%) of the site. Based on the inset map, the thin strip of open space located in the northeast corner of the site (just east of the BMP) is not of acceptable minimum width (35 feet) and is located along a proposed JCSA gravity sewer easement. The total natural open space tabulation cannot include this portion. Adjust the map and BMP worksheet accordingly.

27. Open Space Credit. Area slated for natural open space (ie. conservation easement) at Lots 18, 19 and 20 is shown for clearing and grading. To receive open space credit under the 10 point system, open spaces cannot be disturbed during project construction. See the JCC BMP manual, page 56. Adjust the inset map and BMP worksheet accordingly.

28. Adequate Outflow. Outflows from SWM/BMP facility must be discharged to a well-defined, natural drainage channel. Facilities discharging onto flat areas with no defined channel usually require a channel to be provided which can adequately convey design flows (discharges). The topography and features shown on Sheet 7 and 8 do not show a defined channel below the pond barrel outlet.

29. BMP Design. Design computations for the BMP as presented in the design report are incomplete. The last two pages of the report are not readable. No information appears is provided to support volumes associated with the water quality wet and extended detention pools or to verify the low-flow orifice size provides adequate drawdown time for water quality or stream channel protection criteria. Additional information is required to support peak discharge hydrologic assumptions for pre- and post-development including: drainage areas, composite runoff coefficients and times of concentration. Refer to Section III of the standard erosion and sediment control and stormwater management design plan checklist for information that is required to be presented.

30. BMP Design. A County Type A-3 ten point wet extended detention facility has a required treatment volume of 2" per impervious acre usually split evenly between the wet and extended detention pools.

31. BMP Hydraulics. Pond data in the reservoir report section of the stormwater management design report does not match the construction plan. Ensure the outfall barrel and orifice sizes and invert elevations reasonably match construction plan information. Provide information to support the assumption that no tailwater conditions exist at the BMP outfall for the hydraulic routing.

32. BMP Design. Provide a 1 ft. minimum separation between the principal and emergency spillways.

33. Pond Drain. Included pond drain computations and specifications on the type of valve required.

34. Concrete Riser and Barrel. Specify watertight reinforced concrete pipe meeting the requirements of ASTM C361 or a manhole section meeting the requirements of ASTM C478 for the concrete riser. Similarly, specify watertight pipe meeting ASTM C361 for the outlet barrel and indicate class of pipe required. Show dimensions for the concrete riser base and provide flotation computations.

35. Pond Construction. The pond section on Sheet 6 is substantially incomplete. Provide notes or details showing specific construction requirements for the pond (fill) embankment. Include requirements for sub-grade preparation, embankment soils, fill placement and compaction, an impervious core and core trench and seepage controls(anti-seep collars, toe drain, etc.), as applicable.

36. Emergency Spillway. Provide a typical section or additional information for the emergency spillway including bottom width, sideslopes, type/depth of rock lining required, geotextile, etc.

37. Safety Bench. Due to the depth of the permanent pool, 3H:1V interior side slopes and the considerable excavation depth, include provisions for an intermediate safety bench within the BMP, especially along the west and south sides (ie. road and lot sides).

38. Sediment Forebay. Provide spot elevations on Sheet 8 for the basin bottom and top berm at the forebay. Based on the pond's configuration and excessively cut slopes and depth from the service road, access to the sediment forebay for cleaning purposes would be difficult if not impossible.

39. Maintenance Plan. Provide a maintenance plan for the stormwater management/BMP facility.

40. Roof Drain Collection System. Provide additional information for north and east roof drain collection systems along Lots 8-15 and Lots 16-23. Include pipe sizing computations, end inverts or minimum slopes, minimum burial depth, a typical installation detail, a description of how and when individual lots are to be connected and intermediate cleanout structures. For this application, the type of corrugated polyethylene pipe should be clearly specified such as AASHTO M252 or M294 with reference to ASTM D2321 for installation. In addition, the roof drains should be within a drainage easement and the long-term maintenance plan should address cleanout requirements associated with the small-size collection systems.

41. RCP Pipe. Show class required for all proposed onsite RCP storm drain pipe and culverts.

42. Storm Drain Design. The runoff coefficient of 0.35 as used for the drainage subareas tributary to storm structures SS # 6B and SS # 8 appears questionable. These areas contain impervious areas associated with existing and future roads, buildings, homes, driveways, etc.

43. Storm Drain Design. Design velocities for portions of the 15-inch and 24-inch pipe sizes are quite excessive (above 10 feet per second) where scour of the pipe lining may occur.

44. Storm Drain Design. Include hydraulic grade line computations for the onsite storm drain system.

45. Geotechnical. Provide information (preliminary soil evaluations, logs, test results, reports, etc.) as necessary to substantiate that existing soils beneath the BMP are adequate to sustain a permanent pool as intended for water quality purposes and to assess soil/groundwater conditions that may be encountered due to excessive pond excavations approximately 20 foot in depth from natural ground.

Scott Thomas

From: Scott Thomas
Sent: Wednesday, September 26, 2001 5:34 PM
To: Darryl Cook
Subject: Howard Price Call

I returned call in response to the call you received (and forwarded to me) from Howard Price about the Ironbound Village BMP.

Computations for the BMP were very incomplete in the first review of the project as it related to WQ/SCPv. Comment # 29 in our first review dated April 25th 2001 was as follows.

"BMP Design. Design computations for the BMP as presented in the design report are incomplete. The last two pages of the report are not readable. No information appears is provided to support volumes associated with the water quality wet and extended detention pools or to verify the low-flow orifice size provides adequate drawdown time for water quality or stream channel protection criteria. Additional information is required to support peak discharge hydrologic assumptions for pre- and post-development including: drainage areas, composite runoff coefficients and times of concentration. Refer to Section III of the standard erosion and sediment control and stormwater management design plan checklist for information that is required to be presented."

In a followup 2nd review of the project, there appeared to be a routing problem which focused me in more on the computations. The 10- and 100- WSEL's in the BMP never even got to riser crest, so in looking closer at the comps I saw they used straight rational method, rather than SCS or Modified Rational-Critical Storm to compute the SCPv. The comments in our second review dated August 6th were as follows:

"Stream Channel Protection. Provide additional information to support the value of 14,939 cubic feet as used as the basis for the stream channel protection volume computation. Usually the volume for the 1-year, 24 hour storm event is computed using SCS or the Modified Rational Method-Critical Storm duration approach. If the basic Rational Method (triangular runoff hydrograph) approach was used to determine the SCP volume, the design value may be underestimated."

"BMP Design. Although no distinct discrepancies could be found in the pond's hydraulic report, please check connectivity in the hydraulic computer model for the basin. It is questionable, considering the small size of the basin and the relatively small peak outflow design discharges, that the water surface elevation for the 10- and 100-year storm events would not reach or go above the riser crest set at El. 77.0."

As I recall, I think I even discussed these issues with you briefly as a "what do you think" type question.

Therefore, their lack of comps in the first review does not exclude them from further scrutiny in the second review. I don't raise new issues if I miss them on the 1st review unless it is serious and I can justify my actions. This is not the case, as I mentioned the incompleteness of their BMP design in the first review. In addition, I also discussed this in full with one of their engineers, I think Robert Wornom, after issue of the comments on August 6th.

No further action is needed from us.

Scott

Met w/ Howard Price, Robert Wornom (AES) & Howard Hankins and Frank? Turlington on 10/18/01.

IRONBOUND VILLAGE

IRONBOUND ROAD

PHASES 1 AND 2

DECEMBER 2001

LMDG FILE NO. 2001112-000.07

SUPPORTING ENGINEERING DOCUMENTS

- DRAINAGE CALCULATIONS
  - SUMMARY OF DATA
  - LMDG ROUTING CALCULATIONS
  - AES CALCULATIONS

FINAL COMPS
BMP DESIGN

(Return to Scott)

LANDMARK
DESIGN GROUP

Engineers • Planners • Surveyors • Landscape Architects • Environmental Consultants
4029 Ironbound Road, Suite 100, Williamsburg, VA 23188 (757) 253-2975 FAX: (757) 229-0049 lmdg@landmarkdgwb.com

SUMMARY OF DATA

Storm Event	AES Results	LMDG Results
2-year pre-developed	6.31	6.31
2-year post-developed	8.96	16.82
2-year routed outflow	3.14	7.28
2-year rise elevation	77.13	77.31
10-year pre-developed	8.43	8.43
10-year post-developed	11.72	22.46
10-year routed outflow	9.60	11.71
10-year rise elevation	77.45	77.44
25-year pre-developed	9.52	9.52
25-year post-developed	13.06	25.37
25-year routed outflow	11.23	13.99
25-year rise elevation	77.57	77.69
100-year pre-developed	11.22	11.22
100-year post-developed	15.19	29.91
100-year routed outflow	13.21	14.30
100-year rise elevation	77.80	78.06

LMDG ROUTING CALCULATIONS

File: Universal Pre.xls
PROJECT: **IRONBOUND VILLAGE**
Description: **Pre-development to BMP**
Date: 19-Dec-01
Revised

LandMark Deisgn Group
4029 Ironbound Road, Suite 100
Williamsburg, VA 23188

UNIVERSAL RATIONAL METHOD FOR HYDROGRAPH GENERATION

Drainage Area	=	4.74	Acres
Runoff Coefficient	=	0.30	
Time of Concentration	=	10.20	Min

2 Yr computed peak discharge	=	6.31	cfs
10 Yr computed peak discharge	=	8.43	cfs
25 Yr computed peak discharge	=	9.52	cfs
100 Yr computed peak discharge	=	11.22	cfs

COMPUTED HYDROGRAPH VERTEX POINTS

2 Yr Fequency		10 Yr Frequency		25 Yr Frequency		100 Yr Frequency	
Time (min)	Q (cfs)	Time (min)	Q (cfs)	Time (min)	Q (cfs)	Time (min)	Q (cfs)
0.0	0.00	0.0	0.00	0.0	0.00	0.0	0.00
10.2	1.33	10.2	1.77	10.2	2.00	10.2	2.36
20.4	1.89	20.4	2.53	20.4	2.86	20.4	3.37
30.6	6.31	30.6	8.43	30.6	9.52	30.6	11.22
40.8	3.41	40.8	4.55	40.8	5.14	40.8	6.06
51.0	2.46	51.0	3.29	51.0	3.71	51.0	4.38
61.2	1.58	61.2	2.11	61.2	2.38	61.2	2.81
71.4	1.14	71.4	1.52	71.4	1.71	71.4	2.02
81.6	0.95	81.6	1.26	81.6	1.43	81.6	1.68
91.8	0.88	91.8	1.18	91.8	1.33	91.8	1.57
102.0	0.82	102.0	1.10	102.0	1.24	102.0	1.46
112.2	0.00	112.2	0.00	112.2	0.00	112.2	0.00

EQUATIONS

I=B/(tc+D)^E
tp=3*tc
tb=11*tc
Qp=C*I*A

B,D,E constants based on NWS Hydro 35

File: Universal Post.xls
PROJECT: **IRONBOUND VILLAGE**
Description: **Postdevelopment to BMP**

LandMark Design Group
4029 Ironbound Road, Suite 100
Williamsburg, VA 23188

Date: 19-Dec-01
Revised:

UNIVERSAL RATIONAL METHOD FOR HYDROGRAPH GENERATION

Drainage Area	=	6.89	Acres
Runoff Coefficient	=	0.55	
Time of Concentration	=	10.20	Min

2 Yr computed peak discharge	=	16.82	cfs
10 Yr computed peak discharge	=	22.46	cfs
25 Yr computed peak discharge	=	25.37	cfs
100 Yr computed peak discharge	=	29.91	cfs

COMPUTED HYDROGRAPH VERTEX POINTS

2 Yr Fequency		10 Yr Frequency		25 Yr Frequency		100 Yr Frequency	
Time (min)	Q (cfs)	Time (min)	Q (cfs)	Time (min)	Q (cfs)	Time (min)	Q (cfs)
0.0	0.00	0.0	0.00	0.0	0.00	0.0	0.00
10.2	3.53	10.2	4.72	10.2	5.33	10.2	6.28
20.4	5.05	20.4	6.74	20.4	7.61	20.4	8.97
30.6	16.82	30.6	22.46	30.6	25.37	30.6	29.91
40.8	9.08	40.8	12.13	40.8	13.70	40.8	16.15
51.0	6.56	51.0	8.76	51.0	9.89	51.0	11.67
61.2	4.20	61.2	5.62	61.2	6.34	61.2	7.48
71.4	3.03	71.4	4.04	71.4	4.57	71.4	5.38
81.6	2.52	81.6	3.37	81.6	3.81	81.6	4.49
91.8	2.35	91.8	3.14	91.8	3.55	91.8	4.19
102.0	2.19	102.0	2.92	102.0	3.30	102.0	3.89
112.2	0.00	112.2	0.00	112.2	0.00	112.2	0.00

EQUATIONS
I=B/(tc+D)^E
tp=3*tc
tb=11*tc
Qp=C*I*A

B,D,E constants based on NWS Hydro 35

Hydrograph Summary Report

Hyd. No.	Hydrograph type (origin)	Peak flow (cfs)	Time interval (min)	Time to peak (min)	Volume (cuft)	Return period (yrs)	Inflow hyd(s)	Maximum elevation (ft)	Maximum storage (cuft)	Hydrograph description
1	Manual	16.82	10	30	33,198	2	----	------	------	2-Year Post-Develo
2	Manual	22.46	10	30	44,340	10	----	------	------	10-Year Post-Devel
3	Manual	25.37	10	30	50,142	25	----	------	------	25-Year Post-Devel
4	Manual	29.91	10	30	59,046	100	----	------	------	100-Year Post-Deve
5	Manual	6.31	10	30	12,462	2	----	------	------	2-Year Pre-Develop
6	Manual	8.43	10	30	16,644	10	----	------	------	10-Year Pre-Develo
7	Manual	9.52	10	30	18,792	25	----	------	------	25-Year Pre-Develo
8	Manual	11.22	10	30	22,158	100	----	------	------	100-Year Pre-Devel
10	Reservoir	7.28	10	50	33,198	2	1	77.31	18,759	Pond 1 - 2-Year St
11	Reservoir	11.71	10	40	44,340	10	2	77.44	19,971	Pond 1 - 10-year s
12	Reservoir	13.99	10	40	50,142	25	3	77.69	22,356	Pond 1 - 25-Year S
13	Reservoir	14.30	10	40	59,046	100	4	78.06	25,840	Pond 1- 100-Year S

Hydrograph Report

English

Hyd. No. 1

2-Year Post-Developed

Hydrograph type	= Manual	Peak discharge	= 16.82 cfs
Storm frequency	= 2 yrs	Time interval	= 10 min

Total Volume = 33,198 cuft

Hydrograph Discharge Table

Time -- (hrs	Outflow cfs)
0.17	3.53
0.33	5.05
0.50	16.82 <<
0.67	9.08
0.83	6.56
1.00	4.20
1.17	3.03
1.33	2.52
1.50	2.35
1.67	2.19

...End

Hydrograph Report

English

Hyd. No. 2

10-Year Post-Developed

Hydrograph type	= Manual	Peak discharge	= 22.46 cfs
Storm frequency	= 10 yrs	Time interval	= 10 min

Total Volume = 44,340 cuft

Hydrograph Discharge Table

Time -- (hrs	Outflow cfs)
0.17	4.72
0.33	6.74
0.50	22.46 <<
0.67	12.13
0.83	8.76
1.00	5.62
1.17	4.04
1.33	3.37
1.50	3.14
1.67	2.92

...End

Hydrograph Report

English

Hyd. No. 3

25-Year Post-Developed

Hydrograph type	= Manual	Peak discharge	= 25.37 cfs
Storm frequency	= 25 yrs	Time interval	= 10 min

Total Volume = 50,142 cuft

Hydrograph Discharge Table

Time -- (hrs	Outflow cfs)
0.17	5.33
0.33	7.61
0.50	25.37 <<
0.67	13.70
0.83	9.89
1.00	6.34
1.17	4.57
1.33	3.91
1.50	3.55
1.67	3.30

...End

Hydrograph Report

English

Hyd. No. 4

100-Year Post-Developed

Hydrograph type	= Manual	Peak discharge	= 29.91 cfs
Storm frequency	= 100 yrs	Time interval	= 10 min

Total Volume = 59,046 cuft

Hydrograph Discharge Table

Time -- (hrs	Outflow cfs)
0.17	6.28
0.33	8.97
0.50	29.91 <<
0.67	16.15
0.83	11.67
1.00	7.48
1.17	5.38
1.33	4.49
1.50	4.19
1.67	3.89

...End

Hydrograph Report

English

Hyd. No. 5

2-Year Pre-Developed

Hydrograph type	= Manual	Peak discharge	= 6.31 cfs
Storm frequency	= 2 yrs	Time interval	= 10 min

Total Volume = 12,462 cuft

Hydrograph Discharge Table

Time (hrs	Outflow cfs)
0.17	1.33
0.33	1.89
0.50	6.31 <<
0.67	3.41
0.83	2.46
1.00	1.58
1.17	1.14
1.33	0.95
1.50	0.88
1.67	0.82

...End

Hydrograph Report

English

Hyd. No. 6

10-Year Pre-Developed

Hydrograph type	= Manual	Peak discharge	= 8.43 cfs
Storm frequency	= 10 yrs	Time interval	= 10 min

Total Volume = 16,644 cuft

Hydrograph Discharge Table

Time (hrs	-- Outflow cfs)
0.17	1.77
0.33	2.53
0.50	8.43 <<
0.67	4.55
0.83	3.29
1.00	2.11
1.17	1.52
1.33	1.26
1.50	1.18
1.67	1.10

...End

Hydrograph Report

English

Hyd. No. 7

25-Year Pre-Developed

Hydrograph type	= Manual	Peak discharge	= 9.52 cfs
Storm frequency	= 25 yrs	Time interval	= 10 min

Total Volume = 18,792 cuft

Hydrograph Discharge Table

Time (hrs	Outflow cfs)
0.17	2.00
0.33	2.86
0.50	9.52 <<
0.67	5.14
0.83	3.71
1.00	2.38
1.17	1.71
1.33	1.43
1.50	1.33
1.67	1.24

...End

Hydrograph Report

English

Hyd. No. 8

100-Year Pre-Developed

Hydrograph type	= Manual	Peak discharge	= 11.22 cfs
Storm frequency	= 100 yrs	Time interval	= 10 min

Total Volume = 22,158 cuft

Hydrograph Discharge Table

Time (hrs	Outflow cfs)
0.17	2.36
0.33	3.37
0.50	11.22 <<
0.67	6.06
0.83	4.38
1.00	2.81
1.17	2.02
1.33	1.68
1.50	1.57
1.67	1.46

...End

Hydrograph Report

English

Hyd. No. 10

Pond 1 - 2-Year Storm

Hydrograph type	= Reservoir	Peak discharge	= 7.28 cfs
Storm frequency	= 2 yrs	Time interval	= 10 min
Inflow hyd. No.	= 1	Reservoir name	= BMP
Max. Elevation	= 77.31 ft	Max. Storage	= 18,759 cuft

Storage Indication method used.

Total Volume = 33,198 cuft

Hydrograph Discharge Table

Time (hrs)	Inflow cfs	Elevation ft	Clv A cfs	Clv B cfs	Clv C cfs	Clv D cfs	Wr A cfs	Wr B cfs	Wr C cfs	Wr D cfs	Outflow cfs
0.33	5.05	75.48	11.91	0.22	-----	-----	-----	-----	-----	-----	0.22
0.50	16.82 <<	76.30	12.72	0.45	-----	-----	-----	-----	-----	-----	0.45
0.67	9.08	77.12	13.48	0.59	-----	-----	1.58	-----	-----	-----	2.17
0.83	6.56	77.31 <<	13.65	0.62	-----	-----	6.67	-----	-----	-----	7.28 <<
1.00	4.20	77.25	13.60	0.61	-----	-----	4.83	-----	-----	-----	5.44
1.17	3.03	77.19	13.54	0.60	-----	-----	3.15	-----	-----	-----	3.75
1.33	2.52	77.15	13.51	0.59	-----	-----	2.36	-----	-----	-----	2.95
1.50	2.35	77.13	13.49	0.59	-----	-----	1.94	-----	-----	-----	2.53
1.67	2.19	77.12	13.48	0.59	-----	-----	1.73	-----	-----	-----	2.32
1.83	0.00	77.07	13.44	0.58	-----	-----	0.88	-----	-----	-----	1.46
2.00	0.00	77.01	13.38	0.57	-----	-----	0.08	-----	-----	-----	0.65
2.17	0.00	76.96	13.34	0.56	-----	-----	-----	-----	-----	-----	0.56
2.33	0.00	76.92	13.30	0.56	-----	-----	-----	-----	-----	-----	0.56
2.50	0.00	76.88	13.27	0.55	-----	-----	-----	-----	-----	-----	0.55
2.67	0.00	76.85	13.23	0.54	-----	-----	-----	-----	-----	-----	0.54
2.83	0.00	76.81	13.19	0.54	-----	-----	-----	-----	-----	-----	0.54
3.00	0.00	76.77	13.16	0.53	-----	-----	-----	-----	-----	-----	0.53
3.17	0.00	76.73	13.12	0.53	-----	-----	-----	-----	-----	-----	0.53
3.33	0.00	76.69	13.09	0.52	-----	-----	-----	-----	-----	-----	0.52
3.50	0.00	76.66	13.06	0.51	-----	-----	-----	-----	-----	-----	0.51
3.67	0.00	76.62	13.02	0.51	-----	-----	-----	-----	-----	-----	0.51
3.83	0.00	76.58	12.99	0.50	-----	-----	-----	-----	-----	-----	0.50
4.00	0.00	76.55	12.96	0.49	-----	-----	-----	-----	-----	-----	0.49
4.17	0.00	76.51	12.92	0.49	-----	-----	-----	-----	-----	-----	0.49
4.33	0.00	76.48	12.89	0.48	-----	-----	-----	-----	-----	-----	0.48
4.50	0.00	76.45	12.86	0.47	-----	-----	-----	-----	-----	-----	0.47
4.67	0.00	76.41	12.83	0.47	-----	-----	-----	-----	-----	-----	0.47
4.83	0.00	76.38	12.79	0.46	-----	-----	-----	-----	-----	-----	0.46
5.00	0.00	76.35	12.76	0.46	-----	-----	-----	-----	-----	-----	0.46
5.17	0.00	76.31	12.73	0.45	-----	-----	-----	-----	-----	-----	0.45
5.33	0.00	76.28	12.70	0.44	-----	-----	-----	-----	-----	-----	0.44
5.50	0.00	76.25	12.67	0.44	-----	-----	-----	-----	-----	-----	0.44
5.67	0.00	76.22	12.64	0.43	-----	-----	-----	-----	-----	-----	0.43
5.83	0.00	76.19	12.61	0.42	-----	-----	-----	-----	-----	-----	0.42
6.00	0.00	76.16	12.58	0.42	-----	-----	-----	-----	-----	-----	0.42
6.17	0.00	76.13	12.56	0.41	-----	-----	-----	-----	-----	-----	0.41

Continues on next page...

Hydrograph Discharge Table

Time (hrs)	Inflow cfs	Elevation ft	Clv A cfs	Clv B cfs	Clv C cfs	Clv D cfs	Wr A cfs	Wr B cfs	Wr C cfs	Wr D cfs	Outflow cfs
6.33	0.00	76.10	12.53	0.41	-----	-----	-----	-----	-----	-----	0.41
6.50	0.00	76.07	12.50	0.40	-----	-----	-----	-----	-----	-----	0.40
6.67	0.00	76.04	12.47	0.39	-----	-----	-----	-----	-----	-----	0.39
6.83	0.00	76.01	12.44	0.39	-----	-----	-----	-----	-----	-----	0.39
7.00	0.00	75.98	12.42	0.38	-----	-----	-----	-----	-----	-----	0.38
7.17	0.00	75.95	12.39	0.37	-----	-----	-----	-----	-----	-----	0.37
7.33	0.00	75.92	12.36	0.37	-----	-----	-----	-----	-----	-----	0.37
7.50	0.00	75.89	12.33	0.36	-----	-----	-----	-----	-----	-----	0.36
7.67	0.00	75.87	12.30	0.35	-----	-----	-----	-----	-----	-----	0.35
7.83	0.00	75.84	12.27	0.34	-----	-----	-----	-----	-----	-----	0.34
8.00	0.00	75.81	12.24	0.34	-----	-----	-----	-----	-----	-----	0.34
8.17	0.00	75.78	12.22	0.33	-----	-----	-----	-----	-----	-----	0.33
8.33	0.00	75.76	12.19	0.32	-----	-----	-----	-----	-----	-----	0.32
8.50	0.00	75.73	12.17	0.32	-----	-----	-----	-----	-----	-----	0.32
8.67	0.00	75.71	12.14	0.31	-----	-----	-----	-----	-----	-----	0.31
8.83	0.00	75.68	12.12	0.30	-----	-----	-----	-----	-----	-----	0.30
9.00	0.00	75.66	12.09	0.29	-----	-----	-----	-----	-----	-----	0.29
9.17	0.00	75.63	12.07	0.29	-----	-----	-----	-----	-----	-----	0.29
9.33	0.00	75.61	12.04	0.28	-----	-----	-----	-----	-----	-----	0.28
9.50	0.00	75.59	12.02	0.27	-----	-----	-----	-----	-----	-----	0.27
9.67	0.00	75.57	12.00	0.26	-----	-----	-----	-----	-----	-----	0.26
9.83	0.00	75.55	11.98	0.25	-----	-----	-----	-----	-----	-----	0.25
10.00	0.00	75.53	11.96	0.24	-----	-----	-----	-----	-----	-----	0.24
10.17	0.00	75.51	11.94	0.23	-----	-----	-----	-----	-----	-----	0.23
10.33	0.00	75.49	11.92	0.22	-----	-----	-----	-----	-----	-----	0.22
10.50	0.00	75.47	11.90	0.21	-----	-----	-----	-----	-----	-----	0.21
10.67	0.00	75.45	11.89	0.19	-----	-----	-----	-----	-----	-----	0.19
10.83	0.00	75.44	11.87	0.18	-----	-----	-----	-----	-----	-----	0.18
11.00	0.00	75.42	11.86	0.17	-----	-----	-----	-----	-----	-----	0.17
11.17	0.00	75.41	11.84	0.16	-----	-----	-----	-----	-----	-----	0.16
11.33	0.00	75.40	11.83	0.15	-----	-----	-----	-----	-----	-----	0.15
11.50	0.00	75.39	11.82	0.14	-----	-----	-----	-----	-----	-----	0.14
11.67	0.00	75.38	11.81	0.13	-----	-----	-----	-----	-----	-----	0.13
11.83	0.00	75.37	11.80	0.12	-----	-----	-----	-----	-----	-----	0.12
12.00	0.00	75.36	11.79	0.11	-----	-----	-----	-----	-----	-----	0.11
12.17	0.00	75.35	11.78	0.10	-----	-----	-----	-----	-----	-----	0.10
12.33	0.00	75.34	11.77	0.09	-----	-----	-----	-----	-----	-----	0.09
12.50	0.00	75.33	11.76	0.09	-----	-----	-----	-----	-----	-----	0.09
12.67	0.00	75.33	11.76	0.08	-----	-----	-----	-----	-----	-----	0.08

...End

Reservoir Report

English

Reservoir No. 1 - BMP

Pond Data

Pond storage is based on known contour areas

Stage / Storage Table

Stage ft	Elevation ft	Contour area sqft	Incr. Storage cuft	Total storage cuft
0.00	75.00	6,918	0	0
1.00	76.00	7,865	7,392	7,392
2.00	77.00	8,926	8,396	15,787
3.00	78.00	9,986	9,456	25,243
3.50	78.50	10,684	5,168	30,411
5.00	80.00	12,776	17,595	48,006

Culvert / Orifice Structures

		[A]	[B]	[C]	[D]
Rise in	=	15.0	4.0	0.0	0.0
Span in	=	15.0	4.0	0.0	0.0
No. Barrels	=	1	1	0	0
Invert El. ft	=	69.00	75.00	0.00	0.00
Length ft	=	100.0	1.0	0.0	0.0
Slope %	=	1.00	1.00	0.00	0.00
N-Value	=	.013	.013	.000	.000
Orif. Coeff.	=	0.50	0.60	0.00	0.00
Multi-Stage	=	-----	Yes	No	No

Weir Structures

		[A]	[B]	[C]	[D]
Crest Len ft	=	12.56	8.00	0.00	0.00
Crest El. ft	=	77.00	78.50	0.00	0.00
Weir Coeff.	=	3.00	3.00	0.00	0.00
Eqn. Exp.	=	1.50	1.50	0.00	0.00
Multi-Stage	=	Yes	Yes	No	No

Tailwater Elevation = 0.00 ft

Note: All outflows have been analyzed under inlet and outlet control.

Stage / Storage / Discharge Table

Stage ft	Storage cuft	Elevation ft	Clv A cfs	Clv B cfs	Clv C cfs	Clv D cfs	Wr A cfs	Wr B cfs	Wr C cfs	Wr D cfs	Discharge cfs
0.00	0	75.00	11.41	0.00	---	---	0.00	0.00	---	---	0.00
1.00	7,392	76.00	12.43	0.38	---	---	0.00	0.00	---	---	0.38
2.00	15,787	77.00	13.37	0.57	---	---	0.00	0.00	---	---	0.57
3.00	25,243	78.00	14.25	0.00	---	---	37.68	0.00	---	---	14.25
3.50	30,411	78.50	14.67	0.00	---	---	69.22	0.00	---	---	14.67
5.00	48,006	80.00	15.86	0.00	---	---	195.79	44.09	---	---	15.86

Hydrograph Report

English

Hyd. No. 11

Pond 1 - 10-year storm

Hydrograph type	= Reservoir	Peak discharge	= 11.71 cfs
Storm frequency	= 10 yrs	Time interval	= 10 min
Inflow hyd. No.	= 2	Reservoir name	= BMP
Max. Elevation	= 77.44 ft	Max. Storage	= 19,971 cuft

Storage Indication method used.

Total Volume = 44,340 cuft

Hydrograph Discharge Table

Time (hrs)	Inflow cfs	Elevation ft	Clv A cfs	Clv B cfs	Clv C cfs	Clv D cfs	Wr A cfs	Wr B cfs	Wr C cfs	Wr D cfs	Outflow cfs
0.33	6.74	75.64	12.08	0.29	-----	-----	-----	-----	-----	-----	0.29
0.50	22.46 <<	76.70	13.10	0.52	-----	-----	-----	-----	-----	-----	0.52
0.67	12.13	77.44 <<	13.77	0.63	-----	-----	11.14	-----	-----	-----	11.71 <<
0.83	8.76	77.41	13.73	0.63	-----	-----	9.73	-----	-----	-----	10.35
1.00	5.62	77.31	13.65	0.61	-----	-----	6.47	-----	-----	-----	7.08
1.17	4.04	77.23	13.58	0.60	-----	-----	4.32	-----	-----	-----	4.93
1.33	3.37	77.19	13.54	0.60	-----	-----	3.20	-----	-----	-----	3.80
1.50	3.14	77.17	13.53	0.59	-----	-----	2.76	-----	-----	-----	3.35
1.67	2.92	77.16	13.51	0.59	-----	-----	2.49	-----	-----	-----	3.09
1.83	0.00	77.10	13.46	0.58	-----	-----	1.18	-----	-----	-----	1.76
2.00	0.00	77.02	13.39	0.57	-----	-----	0.21	-----	-----	-----	0.79
2.17	0.00	76.97	13.35	0.56	-----	-----	-----	-----	-----	-----	0.56
2.33	0.00	76.93	13.31	0.56	-----	-----	-----	-----	-----	-----	0.56
2.50	0.00	76.89	13.27	0.55	-----	-----	-----	-----	-----	-----	0.55
2.67	0.00	76.85	13.24	0.55	-----	-----	-----	-----	-----	-----	0.55
2.83	0.00	76.81	13.20	0.54	-----	-----	-----	-----	-----	-----	0.54
3.00	0.00	76.78	13.17	0.53	-----	-----	-----	-----	-----	-----	0.53
3.17	0.00	76.74	13.13	0.53	-----	-----	-----	-----	-----	-----	0.53
3.33	0.00	76.70	13.10	0.52	-----	-----	-----	-----	-----	-----	0.52
3.50	0.00	76.66	13.06	0.51	-----	-----	-----	-----	-----	-----	0.51
3.67	0.00	76.63	13.03	0.51	-----	-----	-----	-----	-----	-----	0.51
3.83	0.00	76.59	12.99	0.50	-----	-----	-----	-----	-----	-----	0.50
4.00	0.00	76.56	12.96	0.50	-----	-----	-----	-----	-----	-----	0.50
4.17	0.00	76.52	12.93	0.49	-----	-----	-----	-----	-----	-----	0.49
4.33	0.00	76.49	12.90	0.48	-----	-----	-----	-----	-----	-----	0.48
4.50	0.00	76.45	12.86	0.48	-----	-----	-----	-----	-----	-----	0.48
4.67	0.00	76.42	12.83	0.47	-----	-----	-----	-----	-----	-----	0.47
4.83	0.00	76.38	12.80	0.46	-----	-----	-----	-----	-----	-----	0.46
5.00	0.00	76.35	12.77	0.46	-----	-----	-----	-----	-----	-----	0.46
5.17	0.00	76.32	12.74	0.45	-----	-----	-----	-----	-----	-----	0.45
5.33	0.00	76.29	12.71	0.44	-----	-----	-----	-----	-----	-----	0.44
5.50	0.00	76.26	12.68	0.44	-----	-----	-----	-----	-----	-----	0.44
5.67	0.00	76.22	12.65	0.43	-----	-----	-----	-----	-----	-----	0.43
5.83	0.00	76.19	12.62	0.43	-----	-----	-----	-----	-----	-----	0.43
6.00	0.00	76.16	12.59	0.42	-----	-----	-----	-----	-----	-----	0.42
6.17	0.00	76.13	12.56	0.41	-----	-----	-----	-----	-----	-----	0.41

Continues on next page...

Hydrograph Discharge Table

Time (hrs)	Inflow cfs	Elevation ft	Clv A cfs	Clv B cfs	Clv C cfs	Clv D cfs	Wr A cfs	Wr B cfs	Wr C cfs	Wr D cfs	Outflow cfs
6.33	0.00	76.10	12.53	0.41	-----	-----	-----	-----	-----	-----	0.41
6.50	0.00	76.08	12.50	0.40	-----	-----	-----	-----	-----	-----	0.40
6.67	0.00	76.05	12.48	0.39	-----	-----	-----	-----	-----	-----	0.39
6.83	0.00	76.02	12.45	0.39	-----	-----	-----	-----	-----	-----	0.39
7.00	0.00	75.99	12.42	0.38	-----	-----	-----	-----	-----	-----	0.38
7.17	0.00	75.96	12.39	0.37	-----	-----	-----	-----	-----	-----	0.37
7.33	0.00	75.93	12.36	0.37	-----	-----	-----	-----	-----	-----	0.37
7.50	0.00	75.90	12.33	0.36	-----	-----	-----	-----	-----	-----	0.36
7.67	0.00	75.87	12.30	0.35	-----	-----	-----	-----	-----	-----	0.35
7.83	0.00	75.84	12.28	0.35	-----	-----	-----	-----	-----	-----	0.35
8.00	0.00	75.82	12.25	0.34	-----	-----	-----	-----	-----	-----	0.34
8.17	0.00	75.79	12.22	0.33	-----	-----	-----	-----	-----	-----	0.33
8.33	0.00	75.76	12.20	0.32	-----	-----	-----	-----	-----	-----	0.32
8.50	0.00	75.74	12.17	0.32	-----	-----	-----	-----	-----	-----	0.32
8.67	0.00	75.71	12.15	0.31	-----	-----	-----	-----	-----	-----	0.31
8.83	0.00	75.69	12.12	0.30	-----	-----	-----	-----	-----	-----	0.30
9.00	0.00	75.66	12.10	0.30	-----	-----	-----	-----	-----	-----	0.30
9.17	0.00	75.64	12.07	0.29	-----	-----	-----	-----	-----	-----	0.29
9.33	0.00	75.61	12.05	0.28	-----	-----	-----	-----	-----	-----	0.28
9.50	0.00	75.59	12.03	0.27	-----	-----	-----	-----	-----	-----	0.27
9.67	0.00	75.57	12.00	0.26	-----	-----	-----	-----	-----	-----	0.26
9.83	0.00	75.55	11.98	0.25	-----	-----	-----	-----	-----	-----	0.25
10.00	0.00	75.53	11.96	0.24	-----	-----	-----	-----	-----	-----	0.24
10.17	0.00	75.51	11.94	0.23	-----	-----	-----	-----	-----	-----	0.23
10.33	0.00	75.49	11.92	0.22	-----	-----	-----	-----	-----	-----	0.22
10.50	0.00	75.47	11.91	0.21	-----	-----	-----	-----	-----	-----	0.21
10.67	0.00	75.46	11.89	0.20	-----	-----	-----	-----	-----	-----	0.20
10.83	0.00	75.44	11.87	0.18	-----	-----	-----	-----	-----	-----	0.18
11.00	0.00	75.43	11.86	0.17	-----	-----	-----	-----	-----	-----	0.17
11.17	0.00	75.41	11.85	0.16	-----	-----	-----	-----	-----	-----	0.16
11.33	0.00	75.40	11.83	0.15	-----	-----	-----	-----	-----	-----	0.15
11.50	0.00	75.39	11.82	0.14	-----	-----	-----	-----	-----	-----	0.14
11.67	0.00	75.38	11.81	0.13	-----	-----	-----	-----	-----	-----	0.13
11.83	0.00	75.37	11.80	0.12	-----	-----	-----	-----	-----	-----	0.12

...End

Reservoir Report

English

Reservoir No. 1 - BMP

Pond Data

Pond storage is based on known contour areas

Stage / Storage Table

Stage ft	Elevation ft	Contour area sqft	Incr. Storage cuft	Total storage cuft
0.00	75.00	6,918	0	0
1.00	76.00	7,865	7,392	7,392
2.00	77.00	8,926	8,396	15,787
3.00	78.00	9,986	9,456	25,243
3.50	78.50	10,684	5,168	30,411
5.00	80.00	12,776	17,595	48,006

Culvert / Orifice Structures

		[A]	[B]	[C]	[D]
Rise in	=	15.0	4.0	0.0	0.0
Span in	=	15.0	4.0	0.0	0.0
No. Barrels	=	1	1	0	0
Invert El. ft	=	69.00	75.00	0.00	0.00
Length ft	=	100.0	1.0	0.0	0.0
Slope %	=	1.00	1.00	0.00	0.00
N-Value	=	.013	.013	.000	.000
Orif. Coeff.	=	0.50	0.60	0.00	0.00
Multi-Stage	=	-----	Yes	No	No

Weir Structures

		[A]	[B]	[C]	[D]
Crest Len ft	=	12.56	8.00	0.00	0.00
Crest El. ft	=	77.00	78.50	0.00	0.00
Weir Coeff.	=	3.00	3.00	0.00	0.00
Eqn. Exp.	=	1.50	1.50	0.00	0.00
Multi-Stage	=	Yes	Yes	No	No

Tailwater Elevation = 0.00 ft

Note: All outflows have been analyzed under inlet and outlet control.

Stage / Storage / Discharge Table

Stage ft	Storage cuft	Elevation ft	Clv A cfs	Clv B cfs	Clv C cfs	Clv D cfs	Wr A cfs	Wr B cfs	Wr C cfs	Wr D cfs	Discharge cfs
0.00	0	75.00	11.41	0.00	---	---	0.00	0.00	---	---	0.00
1.00	7,392	76.00	12.43	0.38	---	---	0.00	0.00	---	---	0.38
2.00	15,787	77.00	13.37	0.57	---	---	0.00	0.00	---	---	0.57
3.00	25,243	78.00	14.25	0.00	---	---	37.68	0.00	---	---	14.25
3.50	30,411	78.50	14.67	0.00	---	---	69.22	0.00	---	---	14.67
5.00	48,006	80.00	15.86	0.00	---	---	195.79	44.09	---	---	15.86

Hydrograph Report

English

Hyd. No. 12

Pond 1 - 25-Year Storm

Hydrograph type	= Reservoir	Peak discharge	= 13.99 cfs
Storm frequency	= 25 yrs	Time interval	= 10 min
Inflow hyd. No.	= 3	Reservoir name	= BMP
Max. Elevation	= 77.69 ft	Max. Storage	= 22,356 cuft

Storage Indication method used.

Total Volume = 50,142 cuft

Hydrograph Discharge Table

Time (hrs)	Inflow cfs	Elevation ft	Clv A cfs	Clv B cfs	Clv C cfs	Clv D cfs	Wr A cfs	Wr B cfs	Wr C cfs	Wr D cfs	Outflow cfs
0.33	7.61	75.73	12.16	0.31	-----	-----	-----	-----	-----	-----	0.31
0.50	25.37 <<	76.91	13.29	0.55	-----	-----	-----	-----	-----	-----	0.55
0.67	13.70	77.69 <<	13.99	-----	-----	-----	21.83	-----	-----	-----	13.99 <<
0.83	9.89	77.56	13.87	0.26	-----	-----	15.81	-----	-----	-----	13.87
1.00	6.34	77.36	13.69	0.62	-----	-----	8.11	-----	-----	-----	8.73
1.17	4.57	77.25	13.60	0.61	-----	-----	4.86	-----	-----	-----	5.47
1.33	3.91	77.21	13.56	0.60	-----	-----	3.70	-----	-----	-----	4.31
1.50	3.55	77.19	13.54	0.60	-----	-----	3.19	-----	-----	-----	3.79
1.67	3.30	77.18	13.53	0.60	-----	-----	2.89	-----	-----	-----	3.49
1.83	0.00	77.11	13.47	0.59	-----	-----	1.39	-----	-----	-----	1.98
2.00	0.00	77.02	13.39	0.57	-----	-----	0.25	-----	-----	-----	0.82
2.17	0.00	76.97	13.35	0.56	-----	-----	-----	-----	-----	-----	0.56
2.33	0.00	76.93	13.31	0.56	-----	-----	-----	-----	-----	-----	0.56
2.50	0.00	76.89	13.27	0.55	-----	-----	-----	-----	-----	-----	0.55
2.67	0.00	76.85	13.24	0.55	-----	-----	-----	-----	-----	-----	0.55
2.83	0.00	76.82	13.20	0.54	-----	-----	-----	-----	-----	-----	0.54
3.00	0.00	76.78	13.17	0.53	-----	-----	-----	-----	-----	-----	0.53
3.17	0.00	76.74	13.13	0.53	-----	-----	-----	-----	-----	-----	0.53
3.33	0.00	76.70	13.10	0.52	-----	-----	-----	-----	-----	-----	0.52
3.50	0.00	76.67	13.06	0.51	-----	-----	-----	-----	-----	-----	0.51
3.67	0.00	76.63	13.03	0.51	-----	-----	-----	-----	-----	-----	0.51
3.83	0.00	76.59	13.00	0.50	-----	-----	-----	-----	-----	-----	0.50
4.00	0.00	76.56	12.96	0.50	-----	-----	-----	-----	-----	-----	0.50
4.17	0.00	76.52	12.93	0.49	-----	-----	-----	-----	-----	-----	0.49
4.33	0.00	76.49	12.90	0.48	-----	-----	-----	-----	-----	-----	0.48
4.50	0.00	76.45	12.87	0.48	-----	-----	-----	-----	-----	-----	0.48
4.67	0.00	76.42	12.83	0.47	-----	-----	-----	-----	-----	-----	0.47
4.83	0.00	76.39	12.80	0.46	-----	-----	-----	-----	-----	-----	0.46
5.00	0.00	76.35	12.77	0.46	-----	-----	-----	-----	-----	-----	0.46
5.17	0.00	76.32	12.74	0.45	-----	-----	-----	-----	-----	-----	0.45
5.33	0.00	76.29	12.71	0.44	-----	-----	-----	-----	-----	-----	0.44
5.50	0.00	76.26	12.68	0.44	-----	-----	-----	-----	-----	-----	0.44
5.67	0.00	76.23	12.65	0.43	-----	-----	-----	-----	-----	-----	0.43
5.83	0.00	76.19	12.62	0.43	-----	-----	-----	-----	-----	-----	0.43
6.00	0.00	76.16	12.59	0.42	-----	-----	-----	-----	-----	-----	0.42
6.17	0.00	76.13	12.56	0.41	-----	-----	-----	-----	-----	-----	0.41

Continues on next page...

Hydrograph Discharge Table

Time (hrs)	Inflow cfs	Elevation ft	Clv A cfs	Clv B cfs	Clv C cfs	Clv D cfs	Wr A cfs	Wr B cfs	Wr C cfs	Wr D cfs	Outflow cfs
6.33	0.00	76.11	12.53	0.41	-----	-----	-----	-----	-----	-----	0.41
6.50	0.00	76.08	12.51	0.40	-----	-----	-----	-----	-----	-----	0.40
6.67	0.00	76.05	12.48	0.39	-----	-----	-----	-----	-----	-----	0.39
6.83	0.00	76.02	12.45	0.39	-----	-----	-----	-----	-----	-----	0.39
7.00	0.00	75.99	12.42	0.38	-----	-----	-----	-----	-----	-----	0.38
7.17	0.00	75.96	12.39	0.37	-----	-----	-----	-----	-----	-----	0.37
7.33	0.00	75.93	12.36	0.37	-----	-----	-----	-----	-----	-----	0.37
7.50	0.00	75.90	12.33	0.36	-----	-----	-----	-----	-----	-----	0.36
7.67	0.00	75.87	12.31	0.35	-----	-----	-----	-----	-----	-----	0.35
7.83	0.00	75.84	12.28	0.35	-----	-----	-----	-----	-----	-----	0.35
8.00	0.00	75.82	12.25	0.34	-----	-----	-----	-----	-----	-----	0.34
8.17	0.00	75.79	12.22	0.33	-----	-----	-----	-----	-----	-----	0.33
8.33	0.00	75.76	12.20	0.32	-----	-----	-----	-----	-----	-----	0.32
8.50	0.00	75.74	12.17	0.32	-----	-----	-----	-----	-----	-----	0.32
8.67	0.00	75.71	12.15	0.31	-----	-----	-----	-----	-----	-----	0.31
8.83	0.00	75.69	12.12	0.30	-----	-----	-----	-----	-----	-----	0.30
9.00	0.00	75.66	12.10	0.30	-----	-----	-----	-----	-----	-----	0.30
9.17	0.00	75.64	12.07	0.29	-----	-----	-----	-----	-----	-----	0.29
9.33	0.00	75.62	12.05	0.28	-----	-----	-----	-----	-----	-----	0.28
9.50	0.00	75.59	12.03	0.27	-----	-----	-----	-----	-----	-----	0.27
9.67	0.00	75.57	12.01	0.26	-----	-----	-----	-----	-----	-----	0.26
9.83	0.00	75.55	11.98	0.25	-----	-----	-----	-----	-----	-----	0.25
10.00	0.00	75.53	11.96	0.24	-----	-----	-----	-----	-----	-----	0.24
10.17	0.00	75.51	11.94	0.24	-----	-----	-----	-----	-----	-----	0.24
10.33	0.00	75.49	11.93	0.22	-----	-----	-----	-----	-----	-----	0.22
10.50	0.00	75.47	11.91	0.21	-----	-----	-----	-----	-----	-----	0.21
10.67	0.00	75.46	11.89	0.20	-----	-----	-----	-----	-----	-----	0.20
10.83	0.00	75.44	11.87	0.18	-----	-----	-----	-----	-----	-----	0.18
11.00	0.00	75.43	11.86	0.17	-----	-----	-----	-----	-----	-----	0.17
11.17	0.00	75.41	11.85	0.16	-----	-----	-----	-----	-----	-----	0.16
11.33	0.00	75.40	11.83	0.15	-----	-----	-----	-----	-----	-----	0.15
11.50	0.00	75.39	11.82	0.14	-----	-----	-----	-----	-----	-----	0.14

...End

Reservoir Report

English

Reservoir No. 1 - BMP

Pond Data

Pond storage is based on known contour areas

Stage / Storage Table

Stage ft	Elevation ft	Contour area sqft	Incr. Storage cuft	Total storage cuft
0.00	75.00	6,918	0	0
1.00	76.00	7,865	7,392	7,392
2.00	77.00	8,926	8,396	15,787
3.00	78.00	9,986	9,456	25,243
3.50	78.50	10,684	5,168	30,411
5.00	80.00	12,776	17,595	48,006

Culvert / Orifice Structures

		[A]	[B]	[C]	[D]
Rise in	=	15.0	4.0	0.0	0.0
Span in	=	15.0	4.0	0.0	0.0
No. Barrels	=	1	1	0	0
Invert El. ft	=	69.00	75.00	0.00	0.00
Length ft	=	100.0	1.0	0.0	0.0
Slope %	=	1.00	1.00	0.00	0.00
N-Value	=	.013	.013	.000	.000
Orif. Coeff.	=	0.50	0.60	0.00	0.00
Multi-Stage	=	-----	Yes	No	No

Weir Structures

		[A]	[B]	[C]	[D]
Crest Len ft	=	12.56	8.00	0.00	0.00
Crest El. ft	=	77.00	78.50	0.00	0.00
Weir Coeff.	=	3.00	3.00	0.00	0.00
Eqn. Exp.	=	1.50	1.50	0.00	0.00
Multi-Stage	=	Yes	Yes	No	No

Tailwater Elevation = 0.00 ft

Note: All outflows have been analyzed under inlet and outlet control.

Stage / Storage / Discharge Table

Stage ft	Storage cuft	Elevation ft	Clv A cfs	Clv B cfs	Clv C cfs	Clv D cfs	Wr A cfs	Wr B cfs	Wr C cfs	Wr D cfs	Discharge cfs
0.00	0	75.00	11.41	0.00	---	---	0.00	0.00	---	---	0.00
1.00	7,392	76.00	12.43	0.38	---	---	0.00	0.00	---	---	0.38
2.00	15,787	77.00	13.37	0.57	---	---	0.00	0.00	---	---	0.57
3.00	25,243	78.00	14.25	0.00	---	---	37.68	0.00	---	---	14.25
3.50	30,411	78.50	14.67	0.00	---	---	69.22	0.00	---	---	14.67
5.00	48,006	80.00	15.86	0.00	---	---	195.79	44.09	---	---	15.86

Hydrograph Report

English

Hyd. No. 13

Pond 1- 100-Year Storm

Hydrograph type	= Reservoir	Peak discharge	= 14.30 cfs
Storm frequency	= 100 yrs	Time interval	= 10 min
Inflow hyd. No.	= 4	Reservoir name	= BMP
Max. Elevation	= 78.06 ft	Max. Storage	= 25,840 cuft

Storage Indication method used.

Total Volume = 59,046 cuft

Hydrograph Discharge Table

Time (hrs)	Inflow cfs	Elevation ft	Clv A cfs	Clv B cfs	Clv C cfs	Clv D cfs	Wr A cfs	Wr B cfs	Wr C cfs	Wr D cfs	Outflow cfs
0.33	8.97	75.86	12.29	0.35	-----	-----	-----	-----	-----	-----	0.35
0.50	29.91 <<	77.14	13.50	0.59	-----	-----	2.04	-----	-----	-----	2.63
0.67	16.15	78.06 <<	14.30	-----	-----	-----	41.00	-----	-----	-----	14.30 <<
0.83	11.67	78.04	14.28	-----	-----	-----	39.73	-----	-----	-----	14.28
1.00	7.48	77.75	14.03	-----	-----	-----	24.44	-----	-----	-----	14.03
1.17	5.38	77.39	13.72	0.63	-----	-----	9.35	-----	-----	-----	9.98
1.33	4.49	77.23	13.58	0.60	-----	-----	4.34	-----	-----	-----	4.94
1.50	4.19	77.21	13.56	0.60	-----	-----	3.77	-----	-----	-----	4.37
1.67	3.89	77.20	13.55	0.60	-----	-----	3.46	-----	-----	-----	4.06
1.83	0.00	77.12	13.48	0.59	-----	-----	1.72	-----	-----	-----	2.31
2.00	0.00	77.02	13.39	0.57	-----	-----	0.28	-----	-----	-----	0.86
2.17	0.00	76.98	13.35	0.57	-----	-----	-----	-----	-----	-----	0.57
2.33	0.00	76.94	13.31	0.56	-----	-----	-----	-----	-----	-----	0.56
2.50	0.00	76.90	13.28	0.55	-----	-----	-----	-----	-----	-----	0.55
2.67	0.00	76.86	13.24	0.55	-----	-----	-----	-----	-----	-----	0.55
2.83	0.00	76.82	13.20	0.54	-----	-----	-----	-----	-----	-----	0.54
3.00	0.00	76.78	13.17	0.53	-----	-----	-----	-----	-----	-----	0.53
3.17	0.00	76.74	13.13	0.53	-----	-----	-----	-----	-----	-----	0.53
3.33	0.00	76.70	13.10	0.52	-----	-----	-----	-----	-----	-----	0.52
3.50	0.00	76.67	13.07	0.51	-----	-----	-----	-----	-----	-----	0.51
3.67	0.00	76.63	13.03	0.51	-----	-----	-----	-----	-----	-----	0.51
3.83	0.00	76.59	13.00	0.50	-----	-----	-----	-----	-----	-----	0.50
4.00	0.00	76.56	12.96	0.50	-----	-----	-----	-----	-----	-----	0.50
4.17	0.00	76.52	12.93	0.49	-----	-----	-----	-----	-----	-----	0.49
4.33	0.00	76.49	12.90	0.48	-----	-----	-----	-----	-----	-----	0.48
4.50	0.00	76.45	12.87	0.48	-----	-----	-----	-----	-----	-----	0.48
4.67	0.00	76.42	12.83	0.47	-----	-----	-----	-----	-----	-----	0.47
4.83	0.00	76.39	12.80	0.46	-----	-----	-----	-----	-----	-----	0.46
5.00	0.00	76.35	12.77	0.46	-----	-----	-----	-----	-----	-----	0.46
5.17	0.00	76.32	12.74	0.45	-----	-----	-----	-----	-----	-----	0.45
5.33	0.00	76.29	12.71	0.45	-----	-----	-----	-----	-----	-----	0.45
5.50	0.00	76.26	12.68	0.44	-----	-----	-----	-----	-----	-----	0.44
5.67	0.00	76.23	12.65	0.43	-----	-----	-----	-----	-----	-----	0.43
5.83	0.00	76.20	12.62	0.43	-----	-----	-----	-----	-----	-----	0.43
6.00	0.00	76.17	12.59	0.42	-----	-----	-----	-----	-----	-----	0.42
6.17	0.00	76.14	12.56	0.41	-----	-----	-----	-----	-----	-----	0.41

Continues on next page...

Hydrograph Discharge Table

Time (hrs)	Inflow cfs	Elevation ft	Clv A cfs	Clv B cfs	Clv C cfs	Clv D cfs	Wr A cfs	Wr B cfs	Wr C cfs	Wr D cfs	Outflow cfs
6.33	0.00	76.11	12.54	0.41	-----	-----	-----	-----	-----	-----	0.41
6.50	0.00	76.08	12.51	0.40	-----	-----	-----	-----	-----	-----	0.40
6.67	0.00	76.05	12.48	0.39	-----	-----	-----	-----	-----	-----	0.39
6.83	0.00	76.02	12.45	0.39	-----	-----	-----	-----	-----	-----	0.39
7.00	0.00	75.99	12.42	0.38	-----	-----	-----	-----	-----	-----	0.38
7.17	0.00	75.96	12.39	0.37	-----	-----	-----	-----	-----	-----	0.37
7.33	0.00	75.93	12.37	0.37	-----	-----	-----	-----	-----	-----	0.37
7.50	0.00	75.90	12.34	0.36	-----	-----	-----	-----	-----	-----	0.36
7.67	0.00	75.87	12.31	0.35	-----	-----	-----	-----	-----	-----	0.35
7.83	0.00	75.85	12.28	0.35	-----	-----	-----	-----	-----	-----	0.35
8.00	0.00	75.82	12.25	0.34	-----	-----	-----	-----	-----	-----	0.34
8.17	0.00	75.79	12.23	0.33	-----	-----	-----	-----	-----	-----	0.33
8.33	0.00	75.76	12.20	0.32	-----	-----	-----	-----	-----	-----	0.32
8.50	0.00	75.74	12.17	0.32	-----	-----	-----	-----	-----	-----	0.32
8.67	0.00	75.71	12.15	0.31	-----	-----	-----	-----	-----	-----	0.31
8.83	0.00	75.69	12.12	0.30	-----	-----	-----	-----	-----	-----	0.30
9.00	0.00	75.66	12.10	0.30	-----	-----	-----	-----	-----	-----	0.30
9.17	0.00	75.64	12.07	0.29	-----	-----	-----	-----	-----	-----	0.29
9.33	0.00	75.62	12.05	0.28	-----	-----	-----	-----	-----	-----	0.28
9.50	0.00	75.59	12.03	0.27	-----	-----	-----	-----	-----	-----	0.27
9.67	0.00	75.57	12.01	0.26	-----	-----	-----	-----	-----	-----	0.26
9.83	0.00	75.55	11.99	0.25	-----	-----	-----	-----	-----	-----	0.25
10.00	0.00	75.53	11.97	0.24	-----	-----	-----	-----	-----	-----	0.24
10.17	0.00	75.51	11.95	0.24	-----	-----	-----	-----	-----	-----	0.24
10.33	0.00	75.49	11.93	0.22	-----	-----	-----	-----	-----	-----	0.22
10.50	0.00	75.48	11.91	0.21	-----	-----	-----	-----	-----	-----	0.21
10.67	0.00	75.46	11.89	0.20	-----	-----	-----	-----	-----	-----	0.20
10.83	0.00	75.44	11.88	0.19	-----	-----	-----	-----	-----	-----	0.19
11.00	0.00	75.43	11.86	0.17	-----	-----	-----	-----	-----	-----	0.17
11.17	0.00	75.41	11.85	0.16	-----	-----	-----	-----	-----	-----	0.16
11.33	0.00	75.40	11.83	0.15	-----	-----	-----	-----	-----	-----	0.15

...End

Reservoir Report

English

Reservoir No. 1 - BMP

Pond Data

Pond storage is based on known contour areas

Stage / Storage Table

Stage ft	Elevation ft	Contour area sqft	Incr. Storage cuft	Total storage cuft
0.00	75.00	6,918	0	0
1.00	76.00	7,865	7,392	7,392
2.00	77.00	8,926	8,396	15,787
3.00	78.00	9,986	9,456	25,243
3.50	78.50	10,684	5,168	30,411
5.00	80.00	12,776	17,595	48,006

Culvert / Orifice Structures

		[A]	[B]	[C]	[D]
Rise in	=	15.0	4.0	0.0	0.0
Span in	=	15.0	4.0	0.0	0.0
No. Barrels	=	1	1	0	0
Invert El. ft	=	69.00	75.00	0.00	0.00
Length ft	=	100.0	1.0	0.0	0.0
Slope %	=	1.00	1.00	0.00	0.00
N-Value	=	.013	.013	.000	.000
Orif. Coeff.	=	0.50	0.60	0.00	0.00
Multi-Stage	=	-----	Yes	No	No

Weir Structures

		[A]	[B]	[C]	[D]
Crest Len ft	=	12.56	8.00	0.00	0.00
Crest El. ft	=	77.00	78.50	0.00	0.00
Weir Coeff.	=	3.00	3.00	0.00	0.00
Eqn. Exp.	=	1.50	1.50	0.00	0.00
Multi-Stage	=	Yes	Yes	No	No

Tailwater Elevation = 0.00 ft

Note: All outflows have been analyzed under inlet and outlet control.

Stage / Storage / Discharge Table

Stage ft	Storage cuft	Elevation ft	Clv A cfs	Clv B cfs	Clv C cfs	Clv D cfs	Wr A cfs	Wr B cfs	Wr C cfs	Wr D cfs	Discharge cfs
0.00	0	75.00	11.41	0.00	---	---	0.00	0.00	---	---	0.00
1.00	7,392	76.00	12.43	0.38	---	---	0.00	0.00	---	---	0.38
2.00	15,787	77.00	13.37	0.57	---	---	0.00	0.00	---	---	0.57
3.00	25,243	78.00	14.25	0.00	---	---	37.68	0.00	---	---	14.25
3.50	30,411	78.50	14.67	0.00	---	---	69.22	0.00	---	---	14.67
5.00	48,006	80.00	15.86	0.00	---	---	195.79	44.09	---	---	15.86

AES CALCULATIONS

STREAM CHANNEL PROTECTION CALCULATIONS
for
Ironbound Village
AES Project No.: 8914-1

PROPOSED POND VOLUME

Eleva	Depth	Area (sq. ft.)	Incremental Volume (cu. ft.)	Sum Volume (cu. ft.)	Sum Volume (cu. yd.)	Volume Above NPE
70.0	0.0	1,094	0	0	0	
72.0	2.0	2,396	3,490	3,490	129	
73.7	1.7	4,303	5,694	9,184	340	
74.0	0.3	5,971	1,541	10,725	397	
75.0	1.0	6,918	6,445	17,170	636	0
76.0	1.0	7,865	7,392	24,561	910	7,391
77.0	1.0	8,926	8,395	32,957	1,221	15,787
78.0	1.0	9,986	9,456	42,412	1,571	25,242
78.5	0.5	10,684	5,168	47,580	1,762	30,410
80.0	1.5	12,776	17,595	65,175	2,414	48,005

RELEASE RATE REQUIRED TO DETAINED VOLUME FOR 24 HOURS

NEED RATIONAL ~~ESP~~ CRITICAL STORM DVR.

Required Volume based upon 1-Year, 24-Hour Storm Hydrograph = 15,026 cubic feet ✓

Volume provided based upon above table = 15,787 cubic feet

Elevation of water surface associated with provided volume = 77.0

Elevation of Low Flow Orifice = 75.0

Average Head, in feet = 1.0

Average Release Rate Calculation $\frac{15{,}787 \text{ cubic feet}}{(24 \text{ hours} \times 60 \text{ minutes/hour} \times 60 \text{ seconds/ minute})}$ = 0.2 cfs

LOW FLOW ORIFICE DIAMETER REQUIRED TO MAINTAIN AVERAGE RELEASE RATE

Diameter of Low Flow Orifice = 2 * (Q / ((64.32 * (h / 2)) ^ (1/2) * 0.6 * 3.14))) ^ (1/2)

where, Q equals average release rate (cfs), h equals average head (feet)

Diameter of Low Flow Orifice = 0.30 feet, or 4 inches

CALEB Hurst
CJ Boorar
CANDMAC

MODIFIED RATIONAL METHOD HYDROGRAPH

Q = CiA * Units Conversion; Where Conversion = 43560 / (12 * 3600)

:

Tag	Freq	File	IDF Curve
Dev..1	1	JCC.IDQ	e = .9050 b = 63.0330 d = 12.2000

Td = .5333 hrs

Tag	Freq (years)	C	C adj factor	C final	I in/hr	Area acres	Peak Q cfs
Dev..1	1	.550	1.000	.550	2.0439	6.900	7.82

HYG file = S:\JOBS\8914\01-IBV\DESIGN\POND-E&S\HAESTAD\IBV-MR.HYG
HYG ID = DRAINAGE AREA
HYG Tag = Dev..1

Peak Discharge = 7.82 cfs
Time to Peak = .1700 hrs
HYG Volume = .345 ac-ft * * = 15,028 CF

HYDROGRAPH ORDINATES (cfs)
Output Time increment = .0100 hrs
Time on left represents time for first value in each row.

Time hrs					
.0000	.00	.46	.92	1.38	1.84
.0500	2.30	2.76	3.22	3.68	4.14
.1000	4.60	5.06	5.52	5.98	6.44
.1500	6.90	7.36	7.82	7.82	7.82
.2000	7.82	7.82	7.82	7.82	7.82
.2500	7.82	7.82	7.82	7.82	7.82
.3000	7.82	7.82	7.82	7.82	7.82
.3500	7.82	7.82	7.82	7.82	7.82
.4000	7.82	7.82	7.82	7.82	7.82
.4500	7.82	7.82	7.82	7.82	7.82
.5000	7.82	7.82	7.82	7.82	7.51
.5500	7.05	6.59	6.13	5.67	5.21
.6000	4.75	4.29	3.83	3.37	2.91

```
*************************************************************************
*************************************************************************
*                                                                       *
*                                                                       *
*                        MODIFIED RATIONAL METHOD                       *
*            ---- Grand Summary For All Storm Frequencies ----          *
*                                                                       *
*                                                                       *
*************************************************************************
*************************************************************************
```

Q = CiA * Units Conversion; Where Conversion = 43560 / (12 * 3600)

Area = 6.900 acres Tc = .1700 hrs 10.2 min.

Freq. years	Adjusted 'C'	Duration hrs	I in/hr	Post Qpeak cfs	Pre Allowable cfs	VOLUMES Inflow ac-ft	VOLUMES Storage ac-ft
1	.550	.5333	2.0439	7.82	5.38	.345	.189
2	.550	.5833	2.3405	8.96	6.31	.432	.235
10	.550	.6667	3.0634	11.72	8.43	.646	.355
25	.550	.7167	3.4127	13.06	9.52	.773	.425
100	.550	.7833	3.9690	15.19	11.22	.983	.541

MASTER DESIGN STORM SUMMARY

Default Network Design Storm File, ID JCC.IDQ jcc

i = b / ((T + d)**e)

Where: i = rainfall intensity (in/hr)
T = rainfall duration (min)
e, b, d = rainfall equation coefficients

Return Event	Rainfall Type	e coeff	b coeff	d coeff
Dev..1	I-D-F from e, b, d coeff.	.9050	63.0330	12.2000
Dev..2	I-D-F from e, b, d coeff.	.9070	79.8580	14.0000
Dev.10	I-D-F from e, b, d coeff.	.9430	143.7170	19.2000
Dev.25	I-D-F from e, b, d coeff.	.9420	172.1050	21.2000
Dev100	I-D-F from e, b, d coeff.	.9860	273.9490	26.3000

MASTER NETWORK SUMMARY
Modified Rational Method Network

(*Node=Outfall; +Node=Diversion;)
(Trun= HYG Truncation: Blank=None; L=Left; R=Rt; LR=Left&Rt)

Storage Node ID	Type	Return Event	HYG Vol ac-ft	Trun	Qpeak hrs	Qpeak cfs	Max WSEL ft	Max Pond ac-ft
DRAINAGE AREA	AREA	1	.345		.1700	7.82		
DRAINAGE AREA	AREA	2	.432		.1700	8.96		
DRAINAGE AREA	AREA	10	.646		.1700	11.72		
DRAINAGE AREA	AREA	25	.773		.1700	13.06		
DRAINAGE AREA	AREA	100	.983		.1700	15.19		
*OUTFALL	JCT	1	.340		.6700	.53		
*OUTFALL	JCT	2	.425		.6900	3.14		
*OUTFALL	JCT	10	.639		.7000	9.60		
*OUTFALL	JCT	25	.766		.7400	11.23		
*OUTFALL	JCT	100	.976		.8000	13.21		
POND IN	POND	1	.345		.1700	7.82		
POND IN	POND	2	.432		.1700	8.96		

MASTER NETWORK SUMMARY
Modified Rational Method Network

(*Node=Outfall; +Node=Diversion;)
(Trun= HYG Truncation: Blank=None; L=Left; R=Rt; LR=Left&Rt)

Storage Node ID		Type	Return Event	HYG Vol ac-ft	Trun	Qpeak hrs	Qpeak cfs	Max WSEL ft		Max Pond ac-ft
POND	IN	POND	10	.646		.1700	11.72			
POND	IN	POND	25	.773		.1700	13.06			
POND	IN	POND	100	.983		.1700	15.19			
POND	OUT	POND	1	.340		.6700	.53	76.82		.716
POND	OUT	POND	2	.425		.6900	3.14	77.13		.780
POND	OUT	POND	10	.639		.7000	9.60	77.45		.847
POND	OUT	POND	25	.766		.7400	11.23	77.57		.874
POND	OUT	POND	100	.976		.8000	13.21	77.80	OHW	.925

Q_{OUT} ELEV.

File.... S:\JOBS\8914\01-IBV\DESIGN\POND-E&S\HAESTAD\POND.PPW

REQUESTED POND WS ELEVATIONS:

Min. Elev.= 70.00 ft
Increment = .50 ft
Max. Elev.= 80.00 ft

****
OUTLET CONNECTIVITY
****

---> Forward Flow Only (UpStream to DnStream)
<--- Reverse Flow Only (DnStream to UpStream)
<---> Forward and Reverse Both Allowed

Structure	No.		Outfall	E1, ft	E2, ft
Weir-Rectangular	SW	--->	TW	78.500	80.000
Stand Pipe	SP	--->	CV	77.000	80.000
Orifice-Circular	OR	--->	CV	75.000	80.000
Culvert-Circular	CV	--->	TW	69.000	80.000
TW SETUP, DS Channel					

File.... S:\JOBS\8914\01-IBV\DESIGN\POND-E&S\HAESTAD\POND.PPW

OUTLET STRUCTURE INPUT DATA

```
Structure ID       = SW
Structure Type     = Weir-Rectangular
-----------------------------------
# of Openings      =         1
Crest Elev.        =     78.50 ft
Weir Length        =      8.00 ft
Weir Coeff.        =  3.000000

Weir TW effects      (Use adjustment equation)
```

```
Structure ID       = SP
Structure Type     = Stand Pipe
-----------------------------------
# of Openings      =         1
Invert Elev.       =     77.00 ft
Diameter           =    3.0000 ft
Orifice Area       =    7.0686 sq.ft
Orifice Coeff.     =      .600
Weir Length        =      9.42 ft
Weir Coeff.        =     3.000
K, Submerged       =      .000
K, Reverse         =     1.000
Kb,Barrel          =   .000000  (per ft of full flow)
Barrel Length      =       .00 ft
Mannings n         =     .0000
```

```
Structure ID       = OR
Structure Type     = Orifice-Circular
-----------------------------------
# of Openings      =         1
Invert Elev.       =     75.00 ft
Diameter           =     .3300 ft
Orifice Coeff.     =      .600
```

File.... S:\JOBS\8914\01-IBV\DESIGN\POND-E&S\HAESTAD\POND.PPW

OUTLET STRUCTURE INPUT DATA

```
Structure ID       = CV
Structure Type     = Culvert-Circular
-----------------------------------
No. Barrels        =         1
Barrel Diameter    =    1.2500 ft
Upstream Invert    =     69.00 ft
Dnstream Invert    =     68.00 ft
Horiz. Length      =    100.00 ft
Barrel Length      =    100.01 ft
Barrel Slope       =    .01000 ft/ft

OUTLET CONTROL DATA...
Mannings n         =     .0130
Ke                 =     .5000  (forward entrance loss)
Kb                 =   .023225  (per ft of full flow)
Kr                 =     .5000  (reverse entrance loss)
HW Convergence     =      .001  +/- ft

INLET CONTROL DATA...
Equation form      =         1
Inlet Control K    =     .0078
Inlet Control M    =    2.0000
Inlet Control c    =    .02920
Inlet Control Y    =     .7400
T1 ratio (HW/D)    =     1.131
T2 ratio (HW/D)    =     1.202
Slope Factor       =     -.500

Use unsubmerged inlet control Form 1 equ. below T1 elev.
Use   submerged inlet control Form 1 equ. above T2 elev.

In transition zone between unsubmerged and submerged inlet control,
interpolate between flows at T1 & T2...
At T1 Elev =     70.41 ft  --->  Flow =      4.80 cfs
At T2 Elev =     70.50 ft  --->  Flow =      5.49 cfs


Structure ID       = TW
Structure Type     = TW SETUP, DS Channel
-----------------------------------
FREE OUTFALL CONDITIONS SPECIFIED

CONVERGENCE TOLERANCES...
Maximum Iterations=    30
Min. TW tolerance =    .01 ft
Max. TW tolerance =    .01 ft
Min. HW tolerance =    .01 ft
Max. HW tolerance =    .01 ft
Min.  Q tolerance =    .10 cfs
Max.  Q tolerance =    .10 cfs
```

File.... S:\JOBS\8914\01-IBV\DESIGN\POND-E&S\HAESTAD\POND.PPW

***** COMPOSITE OUTFLOW SUMMARY ****

WS Elev, Total Q		Notes		
Elev. ft	Q cfs	TW Elev ft	Converge Error +/-ft	Contributing Structures
70.00	.00	Free Outfall		(no Q: SW,SP,OR,CV)
70.50	.00	Free Outfall		(no Q: SW,SP,OR,CV)
71.00	.00	Free Outfall		(no Q: SW,SP,OR,CV)
71.50	.00	Free Outfall		(no Q: SW,SP,OR,CV)
72.00	.00	Free Outfall		(no Q: SW,SP,OR,CV)
72.50	.00	Free Outfall		(no Q: SW,SP,OR,CV)
73.00	.00	Free Outfall		(no Q: SW,SP,OR,CV)
73.50	.00	Free Outfall		(no Q: SW,SP,OR,CV)
74.00	.00	Free Outfall		(no Q: SW,SP,OR,CV)
74.50	.00	Free Outfall		(no Q: SW,SP,OR,CV)
75.00	.00	Free Outfall		(no Q: SW,SP,OR,CV)
75.50	.24	Free Outfall		OR,CV (no Q: SW,SP)
76.00	.38	Free Outfall		OR,CV (no Q: SW,SP)
76.50	.48	Free Outfall		OR,CV (no Q: SW,SP)
77.00	.56	Free Outfall		OR,CV (no Q: SW,SP)
77.50	10.63	Free Outfall		SP,OR,CV (no Q: SW)
78.00	14.90	Free Outfall		SP,CV (no Q: SW,OR)
78.50	15.32	Free Outfall		SP,CV (no Q: SW,OR)
79.00	24.21	Free Outfall		SW,SP,CV (no Q: OR)
79.50	40.12	Free Outfall		SW,SP,CV (no Q: OR)
80.00	60.60	Free Outfall		SW,SP,CV (no Q: OR)

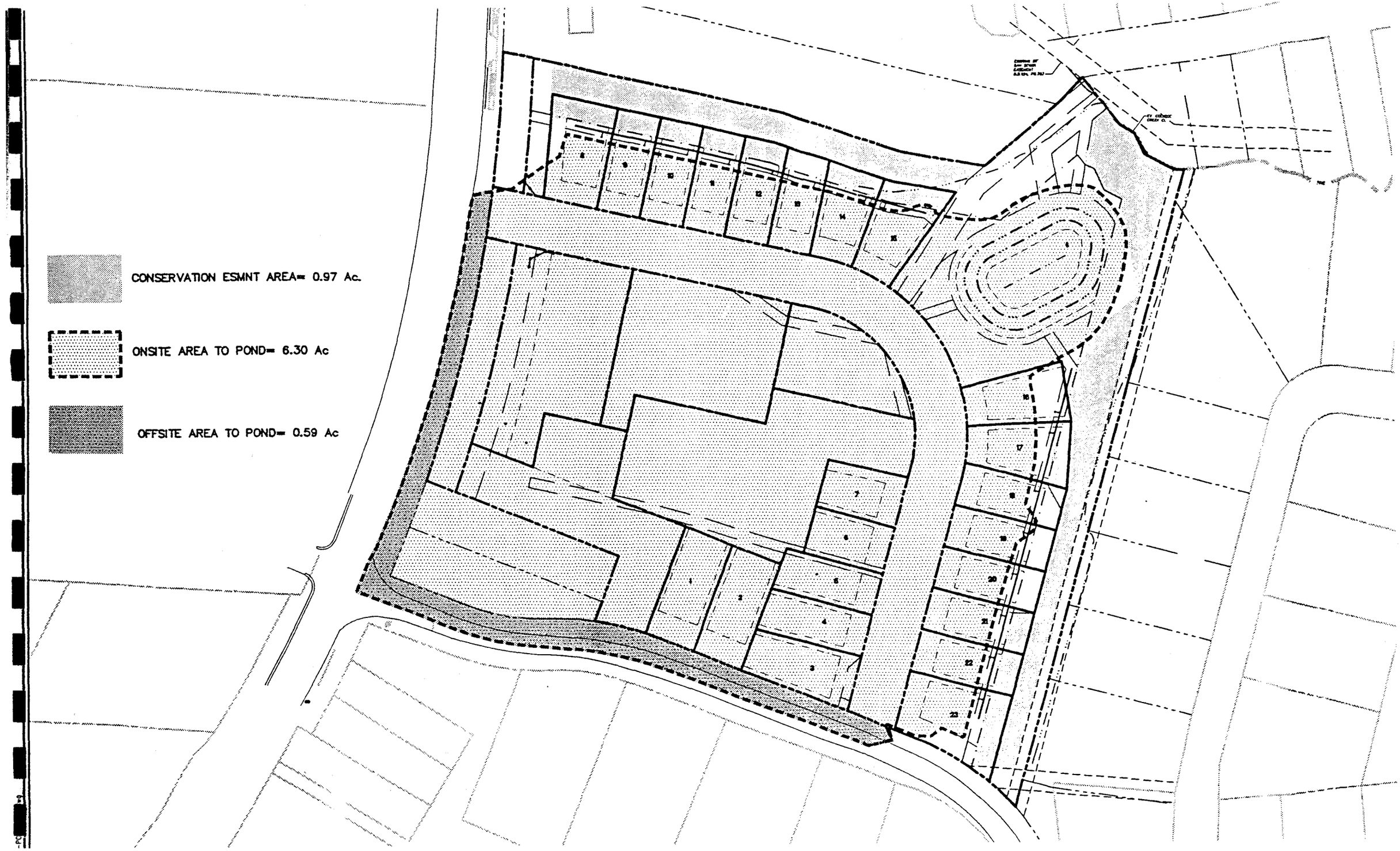
CONSERVATION ESMNT AREA= 0.97 Ac.
ONSITE AREA TO POND= 6.30 Ac
OFFSITE AREA TO POND= 0.59 Ac

WORKSHEET FOR BMP POINT SYSTEM

TOTAL SITE AREA = 7.75 AC.

A. STRUCTURAL BMP POINT ALLOCATION

BMP	BMP Points		Fraction of Site Served	Weighted BMP Points
Wet Pond (E.D.)	10	x	(6.30+0.59) ÷ 7.75 =	8.89
TOTAL WEIGHTED STRUCTURAL BMP POINTS:				8.89

B. NATURAL OPEN SPACE CREDIT

Adjacent To Wetland	Natural Open Space Credit		Fraction of Site		Points for Natural Open Space
No	10	x	0.94 ÷ 7.75	=	1.21

C. TOTAL WEIGHTED POINTS

Structural BMP Points		Natural Open Space Points		Total
8.89	+	1.21	=	10.10

NOTES:

1) Natural open space has been placed in a conservation easement.

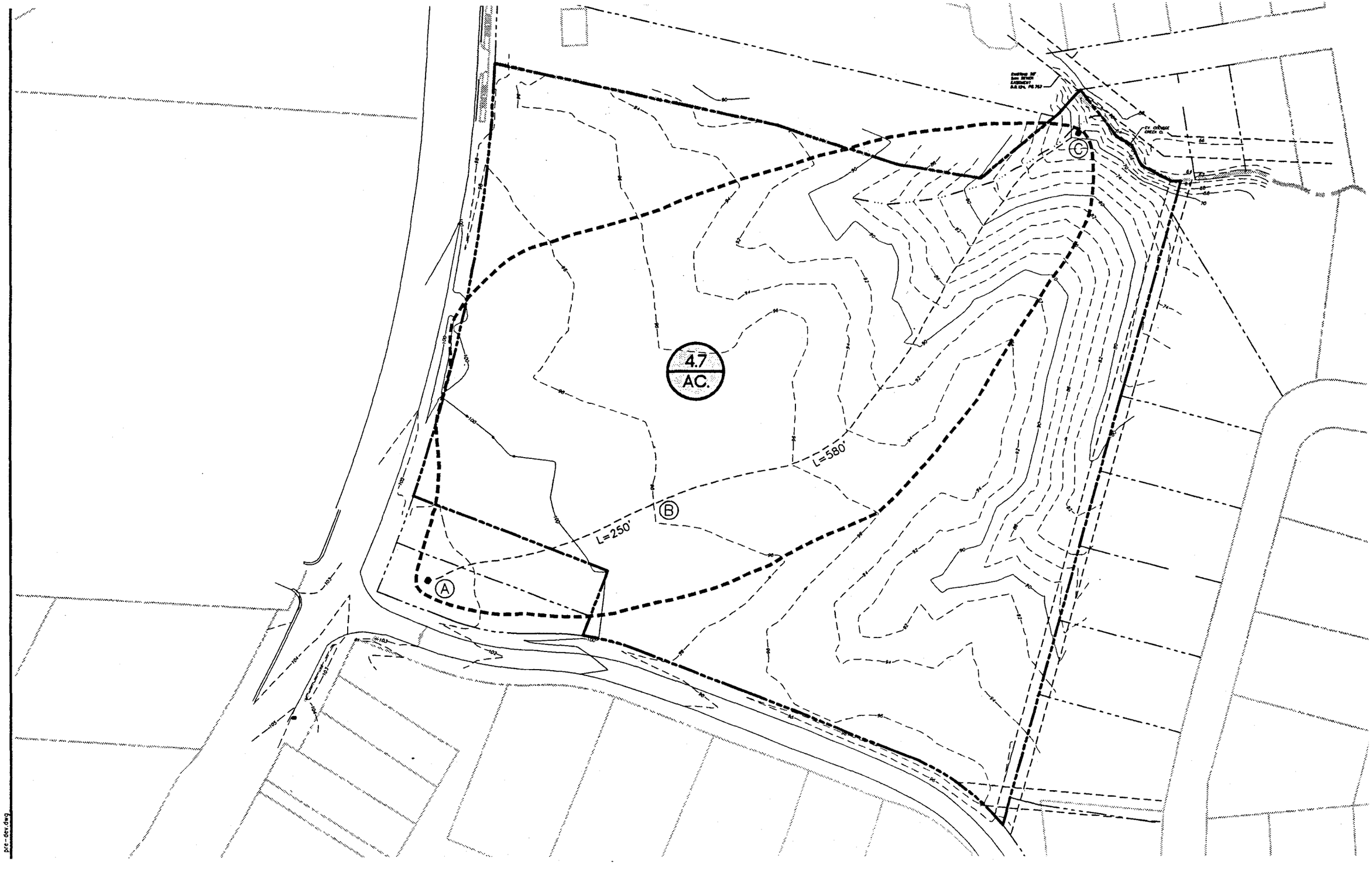

pre-dev.dwg

esign\pond

Impervious Area and Required Volume Calculations
for
Ironbound Village
AES# 8914-1

Impervious items	Totals		Acres
Houses	23 Ea	1350 SF	0.71
T.H.	7 Ea	912 SF	0.15
Office	4 Ea	2400 SF	0.22
Drveways	23 Ea	312 SF	0.16
Roads:			
Public	870 LF	31 Width	0.62
Private	530 LF	60 Width	0.73
Pond Access Rd	340 LF	12 Width	0.09
Wet Pond Surface @ N.P.	105 LF	65 Width	0.16
Sidewalks:			
w/in R/W	850 LF	8 Width	0.16
Offsite Road	500 LF	12 Width	0.14
		Total Impervious Area (TIA)	**3.14**

Area to Pond = 6.8 Acres

Percent Impervious = 46%

Pond's Required Wet Volume = (1")(ft/12")(TIA Ac)(43560 sf/Ac) = 11,390 c.f.

Pond's Required Dry Volume = (1")(ft/12")(TIA Ac)(43560 sf/Ac) = 11,390 c.f.

Sediment Forebay's Required Volume = (0.1")(ft/12")(TIA Ac)(43560 sf/Ac) = 1,139 c.f.

BMP VOLUME CALCULATIONS
for
STONEHOUSE Ph 1, Bent Tree (Sect. V-B) Ph3
AES Project No.: 8878-00

PROPOSED POND VOLUME

Eleva	Depth	Area (sq. ft.)	Incremental Volume (cu. ft.)	Sum Volume (cu. ft.)	Sum Volume (cu. yd.)	Volume Above NPE
70.0	0.0	1,094	0	0	0	
72.0	2.0	2,396	3,490	3,490	129	
73.7	1.7	4,303	5,694	9,184	340	
74.0	0.3	5,971	1,541	10,725	397	
75.0	1.0	6,918	6,445	17,170	636	0
76.0	1.0	7,865	7,392	24,561	910	7,391
77.0	1.0	8,926	8,396	32,957	1,221	15,787
78.0	1.0	9,986	9,456	42,413	1,571	25,243
78.5	0.5	10,684	5,168	47,580	1,762	30,410
80.0	1.5	12,776	17,595	65,175	2,414	48,005

RELEASE RATE REQUIRED TO DETAINED VOLUME FOR 24 HOURS

Required BMP Volume (based upon Impervious Area) = 11,390 cubic feet

Volume Provided (based upon above table) = 15,787 cubic feet

Elevation of water surface associated with provided volume = 77.0

Elevation of Low Flow Orifice = 75.0

Average Head, in feet = 1.0

Average Release Rate Calculation $\frac{15{,}787 \text{ cubic feet}}{\text{(24 hours x 60 minutes/hour x 60 seconds/ minute)}}$ = 0.2 cfs

LOW FLOW ORIFICE DIAMETER REQUIRED TO MAINTAIN AVERAGE RELEASE RATE

Diameter of Low Flow Orifice = 2 * (Q / ((64.32 * (h / 2)) ^ (1/2) * 0.6 * 3.14))) ^ (1/2)

where, Q equals average release rate (cfs), h equals average head (feet)

Diameter of Low Flow Orifice = 0.30 feet, or 4 inches

Hydrograph Summary Report

Hyd. No.	Hydrograph type (origin)	Peak flow (cfs)	Time interval (min)	Time to peak (min)	Volume (cuft)	Return period (yrs)	Inflow hyd(s)	Maximum elevation (ft)	Maximum storage (cuft)	Hydrograph description
1	Rational	7.8	1	5	2,922	2	—	—	—	2yr Pre
2	Rational	10.0	1	5	3,768	10	—	—	—	10yr Pre
3	Rational	13.0	1	5	4,858	100	—	—	—	100yr Pre
5	Rational	18.2	1	5	6,830	1	—	—	—	1yr Post
6	Rational	21.0	1	5	7,864	2	—	—	—	2yr Post
7	Rational	27.0	1	5	10,141	10	—	—	—	10yr Post
8	Rational	34.9	1	5	13,074	100	—	—	—	100yr Post
10	Reservoir	0.4	1	12	6,406	1	5	75.87	23,584	1yr routing
11	Reservoir	0.4	1	12	7,385	2	6	76.00	24,561	2yr routing
12	Reservoir	0.4	1	12	9,538	10	7	76.26	26,718	10yr routing
13	Reservoir	0.5	1	12	12,312	100	8	76.59 DHW	29,503	100yr routing

Proj. file: Pond.gpw	IDF file: JCChydrographs.IDF	Run date: 06-21-2001

IRONBOUND VILLAGE

IRONBOUND ROAD

PHASES 1 AND 2

DECEMBER 2001

LMDG FILE NO. 2001112-000.07

SUPPORTING ENGINEERING DOCUMENTS

- DRAINAGE CALCULATIONS
  - SUMMARY OF DATA
  - LMDG ROUTING CALCULATIONS
  - AES CALCULATIONS

SJT CHECK SET.
(FINAL COMPS)
S-36-01
SP-29-01
REVISED COMPS, RISER SIZE CHANGE 36"ϕ TO 48"ϕ
OK SJT 1-23-02

LANDMARK
DESIGN GROUP

Engineers • Planners • Surveyors • Landscape Architects • Environmental Consultants
4029 Ironbound Road, Suite 100, Williamsburg, VA 23188 (757) 253-2975 FAX: (757) 229-0049 lmdg@landmarkdgwb.com

SUMMARY OF DATA

Storm Event	AES Results	LMDG Results
2-year pre-developed	6.31 ? 7.8	6.31 ✓
2-year post-developed	8.96 ✓	16.82 ✓
2-year routed outflow	3.14 ✓	7.28 ✓
2-year rise elevation	77.13 ✓	77.31 ✓
10-year pre-developed	8.43 ? 10.0	8.43 ✓
10-year post-developed	11.72 ✓	22.46 ✓
10-year routed outflow	9.60 ✓	11.71 ✓
10-year rise elevation	77.45 ✓	77.44 ✓
25-year pre-developed	9.52 ?	9.52 ✓
25-year post-developed	13.06 ✓	25.37 ✓
25-year routed outflow	11.23 ✓	13.99 ✓
25-year rise elevation	77.57 ✓	77.69 ✓
100-year pre-developed	11.22 ? 13.0	11.22 ✓
100-year post-developed	15.19 ✓	29.91 ✓
100-year routed outflow	13.21 ✓	14.30 ✓
100-year rise elevation	77.80 ✓	78.06 ✓ DHW

FINAL ROUTED

2-YEAR 7.28 CFS @ 77.31

10-YEAR 11.71 CFS @ 77.44

100-YEAR 14.30 CFS @ 78.06

2-YEAR
7.28 CFS < 7.8 CFS
AES PRE-2 = 7.8 CFS
LDG PRE-2 = 6.31 CFS

DA pre – 4.7 AC 4.74 AC.

DA post – 6.90 AC. C=0.55
T_c = 10.2 min

Impervious to pond = 3.14 AC (46%)

- MEETS PRE-2 7.8 CFS
- NO CHANGE IN EXT DET (WQV) SCPV)
  ALL ORIF. OR POND VOLUME/ GRADING.
- FLOTATION OK

LMDG ROUTING CALCULATIONS

File: Universal Pre.xls
PROJECT: **IRONBOUND VILLAGE**
Description: **Pre-development to BMP**
Date: 19-Dec-01
Revised

LandMark Deisgn Group
4029 Ironbound Road, Suite 100
Williamsburg, VA 23188

UNIVERSAL RATIONAL METHOD FOR HYDROGRAPH GENERATION

Drainage Area	=	4.74	Acres ✓
Runoff Coefficient	=	0.30	
Time of Concentration	=	10.20	Min
2 Yr computed peak discharge	=	6.31	cfs ≠ 7.8 CFS PER ACES
10 Yr computed peak discharge	=	8.43	cfs
25 Yr computed peak discharge	=	9.52	cfs
100 Yr computed peak discharge	=	11.22	cfs

COMPUTED HYDROGRAPH VERTEX POINTS

2 Yr Fequency		10 Yr Frequency		25 Yr Frequency		100 Yr Frequency	
Time (min)	Q (cfs)	Time (min)	Q (cfs)	Time (min)	Q (cfs)	Time (min)	Q (cfs)
0.0	0.00	0.0	0.00	0.0	0.00	0.0	0.00
10.2	1.33	10.2	1.77	10.2	2.00	10.2	2.36
20.4	1.89	20.4	2.53	20.4	2.86	20.4	3.37
30.6	6.31	30.6	8.43	30.6	9.52	30.6	11.22
40.8	3.41	40.8	4.55	40.8	5.14	40.8	6.06
51.0	2.46	51.0	3.29	51.0	3.71	51.0	4.38
61.2	1.58	61.2	2.11	61.2	2.38	61.2	2.81
71.4	1.14	71.4	1.52	71.4	1.71	71.4	2.02
81.6	0.95	81.6	1.26	81.6	1.43	81.6	1.68
91.8	0.88	91.8	1.18	91.8	1.33	91.8	1.57
102.0	0.82	102.0	1.10	102.0	1.24	102.0	1.46
112.2	0.00	112.2	0.00	112.2	0.00	112.2	0.00

EQUATIONS

I=B/(tc+D)^E
tp=3*tc
tb=11*tc
Qp=C*I*A

B,D,E constants based on NWS Hydro 35

File: Universal Post.xls
PROJECT: **IRONBOUND VILLAGE**
Description: **Postdevelopment to BMP**

LandMark Design Group
4029 Ironbound Road, Suite 100
Williamsburg, VA 23188

Date: 19-Dec-01
Revised:

UNIVERSAL RATIONAL METHOD FOR HYDROGRAPH GENERATION

Drainage Area	=	6.89	Acres
Runoff Coefficient	=	0.55	
Time of Concentration	=	10.20	Min
2 Yr computed peak discharge	=	16.82	cfs
10 Yr computed peak discharge	=	22.46	cfs
25 Yr computed peak discharge	=	25.37	cfs
100 Yr computed peak discharge	=	29.91	cfs

COMPUTED HYDROGRAPH VERTEX POINTS

2 Yr Fequency		10 Yr Frequency		25 Yr Frequency		100 Yr Frequency	
Time (min)	Q (cfs)	Time (min)	Q (cfs)	Time (min)	Q (cfs)	Time (min)	Q (cfs)
0.0	0.00	0.0	0.00	0.0	0.00	0.0	0.00
10.2	3.53	10.2	4.72	10.2	5.33	10.2	6.28
20.4	5.05	20.4	6.74	20.4	7.61	20.4	8.97
30.6	16.82	30.6	22.46	30.6	25.37	30.6	29.91
40.8	9.08	40.8	12.13	40.8	13.70	40.8	16.15
51.0	6.56	51.0	8.76	51.0	9.89	51.0	11.67
61.2	4.20	61.2	5.62	61.2	6.34	61.2	7.48
71.4	3.03	71.4	4.04	71.4	4.57	71.4	5.38
81.6	2.52	81.6	3.37	81.6	3.81	81.6	4.49
91.8	2.35	91.8	3.14	91.8	3.55	91.8	4.19
102.0	2.19	102.0	2.92	102.0	3.30	102.0	3.89
112.2	0.00	112.2	0.00	112.2	0.00	112.2	0.00

EQUATIONS

I=B/(tc+D)^E
tp=3*tc
tb=11*tc
Qp=C*I*A

B,D,E constants based on NWS Hydro 35

Hydrograph Summary Report

Hyd. No.	Hydrograph type (origin)	Peak flow (cfs)	Time interval (min)	Time to peak (min)	Volume (cuft)	Return period (yrs)	Inflow hyd(s)	Maximum elevation (ft)	Maximum storage (cuft)	Hydrograph description	
1	Manual	16.82	10	30	33,198	2	----	------	------	2-Year Post-Develo	POST INFLOW
2	Manual	22.46	10	30	44,340	10	----	------	------	10-Year Post-Devel	
3	Manual	25.37	10	30	50,142	25	----	------	------	25-Year Post-Devel	
4	Manual	29.91	10	30	59,046	100	----	------	------	100-Year Post-Deve	
5	Manual	6.31	10	30	12,462	2	----	------	------	2-Year Pre-Develop	PRE
6	Manual	8.43	10	30	16,644	10	----	------	------	10-Year Pre-Develo	
7	Manual	9.52	10	30	18,792	25	----	------	------	25-Year Pre-Develo	
8	Manual	11.22	10	30	22,158	100	----	------	------	100-Year Pre-Devel	
10	Reservoir	7.28	10	50	33,198	2	1	77.31	18,759	Pond 1 - 2-Year St	Routed
11	Reservoir	11.71	10	40	44,340	10	2	77.44	19,971	Pond 1 - 10-year s	
12	Reservoir	13.99	10	40	50,142	25	3	77.69	22,356	Pond 1 - 25-Year S	
13	Reservoir	14.30	10	40	59,046	100	4	78.06	25,840	Pond 1- 100-Year S	

Proj. file: ironboundpond.GPW | IDF file: Norfolk.IDF | Run date: 12-19-2001

Hydrograph Report

English

Hyd. No. 1

2-Year Post-Developed

Hydrograph type	= Manual	Peak discharge	= 16.82 cfs
Storm frequency	= 2 yrs	Time interval	= 10 min

Total Volume = 33,198 cuft

Hydrograph Discharge Table

Time -- (hrs	Outflow cfs)
0.17	3.53
0.33	5.05
0.50	16.82 <<
0.67	9.08
0.83	6.56
1.00	4.20
1.17	3.03
1.33	2.52
1.50	2.35
1.67	2.19

...End

Hydrograph Report

English

Hyd. No. 2

10-Year Post-Developed

Hydrograph type	= Manual	Peak discharge	= 22.46 cfs
Storm frequency	= 10 yrs	Time interval	= 10 min

Total Volume = 44,340 cuft

Hydrograph Discharge Table

Time -- (hrs	Outflow cfs)
0.17	4.72
0.33	6.74
0.50	22.46 <<
0.67	12.13
0.83	8.76
1.00	5.62
1.17	4.04
1.33	3.37
1.50	3.14
1.67	2.92

...End

Hydrograph Report

English

Hyd. No. 3

25-Year Post-Developed

Hydrograph type	= Manual	Peak discharge	= 25.37 cfs
Storm frequency	= 25 yrs	Time interval	= 10 min

Total Volume = 50,142 cuft

Hydrograph Discharge Table

Time -- (hrs	Outflow cfs)
0.17	5.33
0.33	7.61
0.50	25.37 <<
0.67	13.70
0.83	9.89
1.00	6.34
1.17	4.57
1.33	3.91
1.50	3.55
1.67	3.30

...End

Hydrograph Report

English

Hyd. No. 4

100-Year Post-Developed

Hydrograph type	= Manual	Peak discharge	= 29.91 cfs
Storm frequency	= 100 yrs	Time interval	= 10 min

Total Volume = 59,046 cuft

Hydrograph Discharge Table

Time (hrs	Outflow cfs)
0.17	6.28
0.33	8.97
0.50	29.91 <<
0.67	16.15
0.83	11.67
1.00	7.48
1.17	5.38
1.33	4.49
1.50	4.19
1.67	3.89

...End

Hydrograph Report

English

Hyd. No. 5

2-Year Pre-Developed

Hydrograph type	= Manual	Peak discharge	= 6.31 cfs
Storm frequency	= 2 yrs	Time interval	= 10 min

Total Volume = 12,462 cuft

Hydrograph Discharge Table

Time (hrs	Outflow cfs)
0.17	1.33
0.33	1.89
0.50	6.31 <<
0.67	3.41
0.83	2.46
1.00	1.58
1.17	1.14
1.33	0.95
1.50	0.88
1.67	0.82

...End

Hydrograph Report

English

Hyd. No. 6

10-Year Pre-Developed

Hydrograph type	= Manual	Peak discharge	= 8.43 cfs
Storm frequency	= 10 yrs	Time interval	= 10 min

Total Volume = 16,644 cuft

Hydrograph Discharge Table

Time -- (hrs	Outflow cfs)
0.17	1.77
0.33	2.53
0.50	8.43 <<
0.67	4.55
0.83	3.29
1.00	2.11
1.17	1.52
1.33	1.26
1.50	1.18
1.67	1.10

...End

Hydrograph Report

English

Hyd. No. 7

25-Year Pre-Developed

Hydrograph type	= Manual	Peak discharge	= 9.52 cfs
Storm frequency	= 25 yrs	Time interval	= 10 min

Total Volume = 18,792 cuft

Hydrograph Discharge Table

Time (hrs	Outflow cfs)
0.17	2.00
0.33	2.86
0.50	9.52 <<
0.67	5.14
0.83	3.71
1.00	2.38
1.17	1.71
1.33	1.43
1.50	1.33
1.67	1.24

...End

Hydrograph Report

English

Hyd. No. 8

100-Year Pre-Developed

Hydrograph type	= Manual	Peak discharge	= 11.22 cfs
Storm frequency	= 100 yrs	Time interval	= 10 min

Total Volume = 22,158 cuft

Hydrograph Discharge Table

Time -- (hrs	Outflow cfs)
0.17	2.36
0.33	3.37
0.50	11.22 <<
0.67	6.06
0.83	4.38
1.00	2.81
1.17	2.02
1.33	1.68
1.50	1.57
1.67	1.46

...End

Hydrograph Report

English

Hyd. No. 10

Pond 1 - 2-Year Storm

Hydrograph type	= Reservoir	Peak discharge	= 7.28 cfs
Storm frequency	= 2 yrs	Time interval	= 10 min
Inflow hyd. No.	= 1	Reservoir name	= BMP
Max. Elevation	= 77.31 ft	Max. Storage	= 18,759 cuft

Storage Indication method used.

Total Volume = 33,198 cuft

Hydrograph Discharge Table

Time (hrs)	Inflow cfs	Elevation ft	Clv A cfs	Clv B cfs	Clv C cfs	Clv D cfs	Wr A cfs	Wr B cfs	Wr C cfs	Wr D cfs	Outflow cfs
0.33	5.05	75.48	11.91	0.22	-----	-----	-----	-----	-----	-----	0.22
0.50	16.82 <<	76.30	12.72	0.45	-----	-----	-----	-----	-----	-----	0.45
0.67	9.08	77.12	13.48	0.59	-----	-----	1.58	-----	-----	-----	2.17
0.83	6.56	77.31 <<	13.65	0.62	-----	-----	6.67	-----	-----	-----	7.28 <<
1.00	4.20	77.25	13.60	0.61	-----	-----	4.83	-----	-----	-----	5.44
1.17	3.03	77.19	13.54	0.60	-----	-----	3.15	-----	-----	-----	3.75
1.33	2.52	77.15	13.51	0.59	-----	-----	2.36	-----	-----	-----	2.95
1.50	2.35	77.13	13.49	0.59	-----	-----	1.94	-----	-----	-----	2.53
1.67	2.19	77.12	13.48	0.59	-----	-----	1.73	-----	-----	-----	2.32
1.83	0.00	77.07	13.44	0.58	-----	-----	0.88	-----	-----	-----	1.46
2.00	0.00	77.01	13.38	0.57	-----	-----	0.08	-----	-----	-----	0.65
2.17	0.00	76.96	13.34	0.56	-----	-----	-----	-----	-----	-----	0.56
2.33	0.00	76.92	13.30	0.56	-----	-----	-----	-----	-----	-----	0.56
2.50	0.00	76.88	13.27	0.55	-----	-----	-----	-----	-----	-----	0.55
2.67	0.00	76.85	13.23	0.54	-----	-----	-----	-----	-----	-----	0.54
2.83	0.00	76.81	13.19	0.54	-----	-----	-----	-----	-----	-----	0.54
3.00	0.00	76.77	13.16	0.53	-----	-----	-----	-----	-----	-----	0.53
3.17	0.00	76.73	13.12	0.53	-----	-----	-----	-----	-----	-----	0.53
3.33	0.00	76.69	13.09	0.52	-----	-----	-----	-----	-----	-----	0.52
3.50	0.00	76.66	13.06	0.51	-----	-----	-----	-----	-----	-----	0.51
3.67	0.00	76.62	13.02	0.51	-----	-----	-----	-----	-----	-----	0.51
3.83	0.00	76.58	12.99	0.50	-----	-----	-----	-----	-----	-----	0.50
4.00	0.00	76.55	12.96	0.49	-----	-----	-----	-----	-----	-----	0.49
4.17	0.00	76.51	12.92	0.49	-----	-----	-----	-----	-----	-----	0.49
4.33	0.00	76.48	12.89	0.48	-----	-----	-----	-----	-----	-----	0.48
4.50	0.00	76.45	12.86	0.47	-----	-----	-----	-----	-----	-----	0.47
4.67	0.00	76.41	12.83	0.47	-----	-----	-----	-----	-----	-----	0.47
4.83	0.00	76.38	12.79	0.46	-----	-----	-----	-----	-----	-----	0.46
5.00	0.00	76.35	12.76	0.46	-----	-----	-----	-----	-----	-----	0.46
5.17	0.00	76.31	12.73	0.45	-----	-----	-----	-----	-----	-----	0.45
5.33	0.00	76.28	12.70	0.44	-----	-----	-----	-----	-----	-----	0.44
5.50	0.00	76.25	12.67	0.44	-----	-----	-----	-----	-----	-----	0.44
5.67	0.00	76.22	12.64	0.43	-----	-----	-----	-----	-----	-----	0.43
5.83	0.00	76.19	12.61	0.42	-----	-----	-----	-----	-----	-----	0.42
6.00	0.00	76.16	12.58	0.42	-----	-----	-----	-----	-----	-----	0.42
6.17	0.00	76.13	12.56	0.41	-----	-----	-----	-----	-----	-----	0.41

Continues on next page...

Hydrograph Discharge Table

Time (hrs)	Inflow cfs	Elevation ft	Clv A cfs	Clv B cfs	Clv C cfs	Clv D cfs	Wr A cfs	Wr B cfs	Wr C cfs	Wr D cfs	Outflow cfs
6.33	0.00	76.10	12.53	0.41	-----	-----	-----	-----	-----	-----	0.41
6.50	0.00	76.07	12.50	0.40	-----	-----	-----	-----	-----	-----	0.40
6.67	0.00	76.04	12.47	0.39	-----	-----	-----	-----	-----	-----	0.39
6.83	0.00	76.01	12.44	0.39	-----	-----	-----	-----	-----	-----	0.39
7.00	0.00	75.98	12.42	0.38	-----	-----	-----	-----	-----	-----	0.38
7.17	0.00	75.95	12.39	0.37	-----	-----	-----	-----	-----	-----	0.37
7.33	0.00	75.92	12.36	0.37	-----	-----	-----	-----	-----	-----	0.37
7.50	0.00	75.89	12.33	0.36	-----	-----	-----	-----	-----	-----	0.36
7.67	0.00	75.87	12.30	0.35	-----	-----	-----	-----	-----	-----	0.35
7.83	0.00	75.84	12.27	0.34	-----	-----	-----	-----	-----	-----	0.34
8.00	0.00	75.81	12.24	0.34	-----	-----	-----	-----	-----	-----	0.34
8.17	0.00	75.78	12.22	0.33	-----	-----	-----	-----	-----	-----	0.33
8.33	0.00	75.76	12.19	0.32	-----	-----	-----	-----	-----	-----	0.32
8.50	0.00	75.73	12.17	0.32	-----	-----	-----	-----	-----	-----	0.32
8.67	0.00	75.71	12.14	0.31	-----	-----	-----	-----	-----	-----	0.31
8.83	0.00	75.68	12.12	0.30	-----	-----	-----	-----	-----	-----	0.30
9.00	0.00	75.66	12.09	0.29	-----	-----	-----	-----	-----	-----	0.29
9.17	0.00	75.63	12.07	0.29	-----	-----	-----	-----	-----	-----	0.29
9.33	0.00	75.61	12.04	0.28	-----	-----	-----	-----	-----	-----	0.28
9.50	0.00	75.59	12.02	0.27	-----	-----	-----	-----	-----	-----	0.27
9.67	0.00	75.57	12.00	0.26	-----	-----	-----	-----	-----	-----	0.26
9.83	0.00	75.55	11.98	0.25	-----	-----	-----	-----	-----	-----	0.25
10.00	0.00	75.53	11.96	0.24	-----	-----	-----	-----	-----	-----	0.24
10.17	0.00	75.51	11.94	0.23	-----	-----	-----	-----	-----	-----	0.23
10.33	0.00	75.49	11.92	0.22	-----	-----	-----	-----	-----	-----	0.22
10.50	0.00	75.47	11.90	0.21	-----	-----	-----	-----	-----	-----	0.21
10.67	0.00	75.45	11.89	0.19	-----	-----	-----	-----	-----	-----	0.19
10.83	0.00	75.44	11.87	0.18	-----	-----	-----	-----	-----	-----	0.18
11.00	0.00	75.42	11.86	0.17	-----	-----	-----	-----	-----	-----	0.17
11.17	0.00	75.41	11.84	0.16	-----	-----	-----	-----	-----	-----	0.16
11.33	0.00	75.40	11.83	0.15	-----	-----	-----	-----	-----	-----	0.15
11.50	0.00	75.39	11.82	0.14	-----	-----	-----	-----	-----	-----	0.14
11.67	0.00	75.38	11.81	0.13	-----	-----	-----	-----	-----	-----	0.13
11.83	0.00	75.37	11.80	0.12	-----	-----	-----	-----	-----	-----	0.12
12.00	0.00	75.36	11.79	0.11	-----	-----	-----	-----	-----	-----	0.11
12.17	0.00	75.35	11.78	0.10	-----	-----	-----	-----	-----	-----	0.10
12.33	0.00	75.34	11.77	0.09	-----	-----	-----	-----	-----	-----	0.09
12.50	0.00	75.33	11.76	0.09	-----	-----	-----	-----	-----	-----	0.09
12.67	0.00	75.33	11.76	0.08	-----	-----	-----	-----	-----	-----	0.08

...End

Reservoir Report

English

Reservoir No. 1 - BMP

Pond Data

Pond storage is based on known contour areas

Stage / Storage Table

Stage ft	Elevation ft	Contour area sqft	Incr. Storage cuft	Total storage cuft
0.00	75.00	6,918	0	0
1.00	76.00	7,865	7,392	7,392
2.00	77.00	8,926	8,396	15,787
3.00	78.00	9,986	9,456	25,243
3.50	78.50	10,684	5,168	30,411
5.00	80.00	12,776	17,595	48,006

Culvert / Orifice Structures

	[A] (Barrel)	[B] (Orifice)	[C]	[D]
Rise in	= 15.0	4.0	0.0	0.0
Span in	= 15.0	4.0	0.0	0.0
No. Barrels	= 1	1	0	0
Invert El. ft	= 69.00	75.00	0.00	0.00
Length ft	= 100.0	1.0	0.0	0.0
Slope %	= 1.00	1.00	0.00	0.00
N-Value	= .013	.013	.000	.000
Orif. Coeff.	= 0.50	0.60	0.00	0.00
Multi-Stage	= -----	Yes	No	No

Weir Structures

	[A] (48" Riser)	[B] (Em. Spill)	[C]	[D]
Crest Len ft	= 12.56	8.00	0.00	0.00
Crest El. ft	= 77.00	78.50	0.00	0.00
Weir Coeff.	= 3.00	3.00	0.00	0.00
Eqn. Exp.	= 1.50	1.50	0.00	0.00
Multi-Stage	= Yes	Yes	No	No

Tailwater Elevation = 0.00 ft

Note: All outflows have been analyzed under inlet and outlet control.

Stage / Storage / Discharge Table

Stage ft	Storage cuft	Elevation ft	Clv A cfs	Clv B cfs	Clv C cfs	Clv D cfs	Wr A cfs	Wr B cfs	Wr C cfs	Wr D cfs	Discharge cfs
0.00	0	75.00	11.41	0.00	---	---	0.00	0.00	---	---	0.00
1.00	7,392	76.00	12.43	0.38	---	---	0.00	0.00	---	---	0.38
2.00	15,787	77.00	13.37	0.57	---	---	0.00	0.00	---	---	0.57
3.00	25,243	78.00	14.25	0.00	---	---	37.68	0.00	---	---	14.25
3.50	30,411	78.50	14.67	0.00	---	---	69.22	0.00	---	---	14.67
5.00	48,006	80.00	15.86	0.00	---	---	195.79	44.09	---	---	15.86

Hydrograph Report

English

Hyd. No. 11

Pond 1 - 10-year storm

Hydrograph type	= Reservoir	Peak discharge	= 11.71 cfs
Storm frequency	= 10 yrs	Time interval	= 10 min
Inflow hyd. No.	= 2	Reservoir name	= BMP
Max. Elevation	= 77.44 ft	Max. Storage	= 19,971 cuft

Storage Indication method used.

Total Volume = 44,340 cuft

Hydrograph Discharge Table

BARREL LOW FLOW ORIF RISER EM SPILL

Time (hrs)	Inflow cfs	Elevation ft	Clv A cfs	Clv B cfs	Clv C cfs	Clv D cfs	Wr A cfs	Wr B cfs	Wr C cfs	Wr D cfs	Outflow cfs
0.33	6.74	75.64	12.08	0.29	-----	-----	-----	-----	-----	-----	0.29
0.50	22.46 <<	76.70	13.10	0.52	-----	-----	-----	-----	-----	-----	0.52
0.67	12.13	77.44 <<	13.77	0.63	-----	-----	11.14	-----	-----	-----	11.71 <<
0.83	8.76	77.41	13.73	0.63	-----	-----	9.73	-----	-----	-----	10.35
1.00	5.62	77.31	13.65	0.61	-----	-----	6.47	-----	-----	-----	7.08
1.17	4.04	77.23	13.58	0.60	-----	-----	4.32	-----	-----	-----	4.93
1.33	3.37	77.19	13.54	0.60	-----	-----	3.20	-----	-----	-----	3.80
1.50	3.14	77.17	13.53	0.59	-----	-----	2.76	-----	-----	-----	3.35
1.67	2.92	77.16	13.51	0.59	-----	-----	2.49	-----	-----	-----	3.09
1.83	0.00	77.10	13.46	0.58	-----	-----	1.18	-----	-----	-----	1.76
2.00	0.00	77.02	13.39	0.57	-----	-----	0.21	-----	-----	-----	0.79
2.17	0.00	76.97	13.35	0.56	-----	-----	-----	-----	-----	-----	0.56
2.33	0.00	76.93	13.31	0.56	-----	-----	-----	-----	-----	-----	0.56
2.50	0.00	76.89	13.27	0.55	-----	-----	-----	-----	-----	-----	0.55
2.67	0.00	76.85	13.24	0.55	-----	-----	-----	-----	-----	-----	0.55
2.83	0.00	76.81	13.20	0.54	-----	-----	-----	-----	-----	-----	0.54
3.00	0.00	76.78	13.17	0.53	-----	-----	-----	-----	-----	-----	0.53
3.17	0.00	76.74	13.13	0.53	-----	-----	-----	-----	-----	-----	0.53
3.33	0.00	76.70	13.10	0.52	-----	-----	-----	-----	-----	-----	0.52
3.50	0.00	76.66	13.06	0.51	-----	-----	-----	-----	-----	-----	0.51
3.67	0.00	76.63	13.03	0.51	-----	-----	-----	-----	-----	-----	0.51
3.83	0.00	76.59	12.99	0.50	-----	-----	-----	-----	-----	-----	0.50
4.00	0.00	76.56	12.96	0.50	-----	-----	-----	-----	-----	-----	0.50
4.17	0.00	76.52	12.93	0.49	-----	-----	-----	-----	-----	-----	0.49
4.33	0.00	76.49	12.90	0.48	-----	-----	-----	-----	-----	-----	0.48
4.50	0.00	76.45	12.86	0.48	-----	-----	-----	-----	-----	-----	0.48
4.67	0.00	76.42	12.83	0.47	-----	-----	-----	-----	-----	-----	0.47
4.83	0.00	76.38	12.80	0.46	-----	-----	-----	-----	-----	-----	0.46
5.00	0.00	76.35	12.77	0.46	-----	-----	-----	-----	-----	-----	0.46
5.17	0.00	76.32	12.74	0.45	-----	-----	-----	-----	-----	-----	0.45
5.33	0.00	76.29	12.71	0.44	-----	-----	-----	-----	-----	-----	0.44
5.50	0.00	76.26	12.68	0.44	-----	-----	-----	-----	-----	-----	0.44
5.67	0.00	76.22	12.65	0.43	-----	-----	-----	-----	-----	-----	0.43
5.83	0.00	76.19	12.62	0.43	-----	-----	-----	-----	-----	-----	0.43
6.00	0.00	76.16	12.59	0.42	-----	-----	-----	-----	-----	-----	0.42
6.17	0.00	76.13	12.56	0.41	-----	-----	-----	-----	-----	-----	0.41

RISER CREST

BARREL CONTROLS.

Continues on next page...

Hydrograph Discharge Table

Time (hrs)	Inflow cfs	Elevation ft	Clv A cfs	Clv B cfs	Clv C cfs	Clv D cfs	Wr A cfs	Wr B cfs	Wr C cfs	Wr D cfs	Outflow cfs
6.33	0.00	76.10	12.53	0.41	-----	-----	-----	-----	-----	-----	0.41
6.50	0.00	76.08	12.50	0.40	-----	-----	-----	-----	-----	-----	0.40
6.67	0.00	76.05	12.48	0.39	-----	-----	-----	-----	-----	-----	0.39
6.83	0.00	76.02	12.45	0.39	-----	-----	-----	-----	-----	-----	0.39
7.00	0.00	75.99	12.42	0.38	-----	-----	-----	-----	-----	-----	0.38
7.17	0.00	75.96	12.39	0.37	-----	-----	-----	-----	-----	-----	0.37
7.33	0.00	75.93	12.36	0.37	-----	-----	-----	-----	-----	-----	0.37
7.50	0.00	75.90	12.33	0.36	-----	-----	-----	-----	-----	-----	0.36
7.67	0.00	75.87	12.30	0.35	-----	-----	-----	-----	-----	-----	0.35
7.83	0.00	75.84	12.28	0.35	-----	-----	-----	-----	-----	-----	0.35
8.00	0.00	75.82	12.25	0.34	-----	-----	-----	-----	-----	-----	0.34
8.17	0.00	75.79	12.22	0.33	-----	-----	-----	-----	-----	-----	0.33
8.33	0.00	75.76	12.20	0.32	-----	-----	-----	-----	-----	-----	0.32
8.50	0.00	75.74	12.17	0.32	-----	-----	-----	-----	-----	-----	0.32
8.67	0.00	75.71	12.15	0.31	-----	-----	-----	-----	-----	-----	0.31
8.83	0.00	75.69	12.12	0.30	-----	-----	-----	-----	-----	-----	0.30
9.00	0.00	75.66	12.10	0.30	-----	-----	-----	-----	-----	-----	0.30
9.17	0.00	75.64	12.07	0.29	-----	-----	-----	-----	-----	-----	0.29
9.33	0.00	75.61	12.05	0.28	-----	-----	-----	-----	-----	-----	0.28
9.50	0.00	75.59	12.03	0.27	-----	-----	-----	-----	-----	-----	0.27
9.67	0.00	75.57	12.00	0.26	-----	-----	-----	-----	-----	-----	0.26
9.83	0.00	75.55	11.98	0.25	-----	-----	-----	-----	-----	-----	0.25
10.00	0.00	75.53	11.96	0.24	-----	-----	-----	-----	-----	-----	0.24
10.17	0.00	75.51	11.94	0.23	-----	-----	-----	-----	-----	-----	0.23
10.33	0.00	75.49	11.92	0.22	-----	-----	-----	-----	-----	-----	0.22
10.50	0.00	75.47	11.91	0.21	-----	-----	-----	-----	-----	-----	0.21
10.67	0.00	75.46	11.89	0.20	-----	-----	-----	-----	-----	-----	0.20
10.83	0.00	75.44	11.87	0.18	-----	-----	-----	-----	-----	-----	0.18
11.00	0.00	75.43	11.86	0.17	-----	-----	-----	-----	-----	-----	0.17
11.17	0.00	75.41	11.85	0.16	-----	-----	-----	-----	-----	-----	0.16
11.33	0.00	75.40	11.83	0.15	-----	-----	-----	-----	-----	-----	0.15
11.50	0.00	75.39	11.82	0.14	-----	-----	-----	-----	-----	-----	0.14
11.67	0.00	75.38	11.81	0.13	-----	-----	-----	-----	-----	-----	0.13
11.83	0.00	75.37	11.80	0.12	-----	-----	-----	-----	-----	-----	0.12

...End

Reservoir Report

English

Reservoir No. 1 - BMP

Pond Data

Pond storage is based on known contour areas

Stage / Storage Table

Stage ft	Elevation ft	Contour area sqft	Incr. Storage cuft	Total storage cuft
0.00	75.00	6,918	0	0
1.00	76.00	7,865	7,392	7,392
2.00	77.00	8,926	8,396	15,787
3.00	78.00	9,986	9,456	25,243
3.50	78.50	10,684	5,168	30,411
5.00	80.00	12,776	17,595	48,006

Culvert / Orifice Structures

		[A]	[B]	[C]	[D]
Rise in	=	15.0	4.0	0.0	0.0
Span in	=	15.0	4.0	0.0	0.0
No. Barrels	=	1	1	0	0
Invert El. ft	=	69.00	75.00	0.00	0.00
Length ft	=	100.0	1.0	0.0	0.0
Slope %	=	1.00	1.00	0.00	0.00
N-Value	=	.013	.013	.000	.000
Orif. Coeff.	=	0.50	0.60	0.00	0.00
Multi-Stage	=	-----	Yes	No	No

Weir Structures

		[A]	[B]	[C]	[D]
Crest Len ft	=	12.56	8.00	0.00	0.00
Crest El. ft	=	77.00	78.50	0.00	0.00
Weir Coeff.	=	3.00	3.00	0.00	0.00
Eqn. Exp.	=	1.50	1.50	0.00	0.00
Multi-Stage	=	Yes	Yes	No	No

Tailwater Elevation = 0.00 ft

Note: All outflows have been analyzed under inlet and outlet control.

Stage / Storage / Discharge Table

Stage ft	Storage cuft	Elevation ft	Clv A cfs	Clv B cfs	Clv C cfs	Clv D cfs	Wr A cfs	Wr B cfs	Wr C cfs	Wr D cfs	Discharge cfs
0.00	0	75.00	11.41	0.00	---	---	0.00	0.00	---	---	0.00
1.00	7,392	76.00	12.43	0.38	---	---	0.00	0.00	---	---	0.38
2.00	15,787	77.00	13.37	0.57	---	---	0.00	0.00	---	---	0.57
3.00	25,243	78.00	14.25	0.00	---	---	37.68	0.00	---	---	14.25
3.50	30,411	78.50	14.67	0.00	---	---	69.22	0.00	---	---	14.67
5.00	48,006	80.00	15.86	0.00	---	---	195.79	44.09	---	---	15.86

Hydrograph Report

English

Hyd. No. 12

Pond 1 - 25-Year Storm

Hydrograph type	= Reservoir	Peak discharge	= 13.99 cfs
Storm frequency	= 25 yrs	Time interval	= 10 min
Inflow hyd. No.	= 3	Reservoir name	= BMP
Max. Elevation	= 77.69 ft	Max. Storage	= 22,356 cuft

Storage Indication method used.

Total Volume = 50,142 cuft

Hydrograph Discharge Table

Time (hrs)	Inflow cfs	Elevation ft	Clv A cfs	Clv B cfs	Clv C cfs	Clv D cfs	Wr A cfs	Wr B cfs	Wr C cfs	Wr D cfs	Outflow cfs
0.33	7.61	75.73	12.16	0.31	-----	-----	-----	-----	-----	-----	0.31
0.50	25.37 <<	76.91	13.29	0.55	-----	-----	-----	-----	-----	-----	0.55
0.67	13.70	77.69 <<	13.99	-----	-----	-----	21.83	-----	-----	-----	13.99 <<
0.83	9.89	77.56	13.87	0.26	-----	-----	15.81	-----	-----	-----	13.87
1.00	6.34	77.36	13.69	0.62	-----	-----	8.11	-----	-----	-----	8.73
1.17	4.57	77.25	13.60	0.61	-----	-----	4.86	-----	-----	-----	5.47
1.33	3.91	77.21	13.56	0.60	-----	-----	3.70	-----	-----	-----	4.31
1.50	3.55	77.19	13.54	0.60	-----	-----	3.19	-----	-----	-----	3.79
1.67	3.30	77.18	13.53	0.60	-----	-----	2.89	-----	-----	-----	3.49
1.83	0.00	77.11	13.47	0.59	-----	-----	1.39	-----	-----	-----	1.98
2.00	0.00	77.02	13.39	0.57	-----	-----	0.25	-----	-----	-----	0.82
2.17	0.00	76.97	13.35	0.56	-----	-----	-----	-----	-----	-----	0.56
2.33	0.00	76.93	13.31	0.56	-----	-----	-----	-----	-----	-----	0.56
2.50	0.00	76.89	13.27	0.55	-----	-----	-----	-----	-----	-----	0.55
2.67	0.00	76.85	13.24	0.55	-----	-----	-----	-----	-----	-----	0.55
2.83	0.00	76.82	13.20	0.54	-----	-----	-----	-----	-----	-----	0.54
3.00	0.00	76.78	13.17	0.53	-----	-----	-----	-----	-----	-----	0.53
3.17	0.00	76.74	13.13	0.53	-----	-----	-----	-----	-----	-----	0.53
3.33	0.00	76.70	13.10	0.52	-----	-----	-----	-----	-----	-----	0.52
3.50	0.00	76.67	13.06	0.51	-----	-----	-----	-----	-----	-----	0.51
3.67	0.00	76.63	13.03	0.51	-----	-----	-----	-----	-----	-----	0.51
3.83	0.00	76.59	13.00	0.50	-----	-----	-----	-----	-----	-----	0.50
4.00	0.00	76.56	12.96	0.50	-----	-----	-----	-----	-----	-----	0.50
4.17	0.00	76.52	12.93	0.49	-----	-----	-----	-----	-----	-----	0.49
4.33	0.00	76.49	12.90	0.48	-----	-----	-----	-----	-----	-----	0.48
4.50	0.00	76.45	12.87	0.48	-----	-----	-----	-----	-----	-----	0.48
4.67	0.00	76.42	12.83	0.47	-----	-----	-----	-----	-----	-----	0.47
4.83	0.00	76.39	12.80	0.46	-----	-----	-----	-----	-----	-----	0.46
5.00	0.00	76.35	12.77	0.46	-----	-----	-----	-----	-----	-----	0.46
5.17	0.00	76.32	12.74	0.45	-----	-----	-----	-----	-----	-----	0.45
5.33	0.00	76.29	12.71	0.44	-----	-----	-----	-----	-----	-----	0.44
5.50	0.00	76.26	12.68	0.44	-----	-----	-----	-----	-----	-----	0.44
5.67	0.00	76.23	12.65	0.43	-----	-----	-----	-----	-----	-----	0.43
5.83	0.00	76.19	12.62	0.43	-----	-----	-----	-----	-----	-----	0.43
6.00	0.00	76.16	12.59	0.42	-----	-----	-----	-----	-----	-----	0.42
6.17	0.00	76.13	12.56	0.41	-----	-----	-----	-----	-----	-----	0.41

Continues on next page...

Hydrograph Discharge Table

Time (hrs)	Inflow cfs	Elevation ft	Clv A cfs	Clv B cfs	Clv C cfs	Clv D cfs	Wr A cfs	Wr B cfs	Wr C cfs	Wr D cfs	Outflow cfs
6.33	0.00	76.11	12.53	0.41	-----	-----	-----	-----	-----	-----	0.41
6.50	0.00	76.08	12.51	0.40	-----	-----	-----	-----	-----	-----	0.40
6.67	0.00	76.05	12.48	0.39	-----	-----	-----	-----	-----	-----	0.39
6.83	0.00	76.02	12.45	0.39	-----	-----	-----	-----	-----	-----	0.39
7.00	0.00	75.99	12.42	0.38	-----	-----	-----	-----	-----	-----	0.38
7.17	0.00	75.96	12.39	0.37	-----	-----	-----	-----	-----	-----	0.37
7.33	0.00	75.93	12.36	0.37	-----	-----	-----	-----	-----	-----	0.37
7.50	0.00	75.90	12.33	0.36	-----	-----	-----	-----	-----	-----	0.36
7.67	0.00	75.87	12.31	0.35	-----	-----	-----	-----	-----	-----	0.35
7.83	0.00	75.84	12.28	0.35	-----	-----	-----	-----	-----	-----	0.35
8.00	0.00	75.82	12.25	0.34	-----	-----	-----	-----	-----	-----	0.34
8.17	0.00	75.79	12.22	0.33	-----	-----	-----	-----	-----	-----	0.33
8.33	0.00	75.76	12.20	0.32	-----	-----	-----	-----	-----	-----	0.32
8.50	0.00	75.74	12.17	0.32	-----	-----	-----	-----	-----	-----	0.32
8.67	0.00	75.71	12.15	0.31	-----	-----	-----	-----	-----	-----	0.31
8.83	0.00	75.69	12.12	0.30	-----	-----	-----	-----	-----	-----	0.30
9.00	0.00	75.66	12.10	0.30	-----	-----	-----	-----	-----	-----	0.30
9.17	0.00	75.64	12.07	0.29	-----	-----	-----	-----	-----	-----	0.29
9.33	0.00	75.62	12.05	0.28	-----	-----	-----	-----	-----	-----	0.28
9.50	0.00	75.59	12.03	0.27	-----	-----	-----	-----	-----	-----	0.27
9.67	0.00	75.57	12.01	0.26	-----	-----	-----	-----	-----	-----	0.26
9.83	0.00	75.55	11.98	0.25	-----	-----	-----	-----	-----	-----	0.25
10.00	0.00	75.53	11.96	0.24	-----	-----	-----	-----	-----	-----	0.24
10.17	0.00	75.51	11.94	0.24	-----	-----	-----	-----	-----	-----	0.24
10.33	0.00	75.49	11.93	0.22	-----	-----	-----	-----	-----	-----	0.22
10.50	0.00	75.47	11.91	0.21	-----	-----	-----	-----	-----	-----	0.21
10.67	0.00	75.46	11.89	0.20	-----	-----	-----	-----	-----	-----	0.20
10.83	0.00	75.44	11.87	0.18	-----	-----	-----	-----	-----	-----	0.18
11.00	0.00	75.43	11.86	0.17	-----	-----	-----	-----	-----	-----	0.17
11.17	0.00	75.41	11.85	0.16	-----	-----	-----	-----	-----	-----	0.16
11.33	0.00	75.40	11.83	0.15	-----	-----	-----	-----	-----	-----	0.15
11.50	0.00	75.39	11.82	0.14	-----	-----	-----	-----	-----	-----	0.14

...End

Reservoir Report

English

Reservoir No. 1 - BMP

Pond Data

Pond storage is based on known contour areas

Stage / Storage Table

Stage ft	Elevation ft 74?	Contour area sqft	Incr. Storage cuft	Total storage cuft
0.00	75.00	6,918	0	0
1.00	76.00	7,865	7,392	7,392
2.00	77.00	8,926	8,396	15,787
3.00	78.00	9,986	9,456	25,243
3.50	78.50	10,684	5,168	30,411
5.00	80.00 80.6	12,776	17,595	48,006

Culvert / Orifice Structures

		[A]	[B]	[C]	[D]
Rise in	=	15.0	4.0	0.0	0.0
Span in	=	15.0	4.0	0.0	0.0
No. Barrels	=	1	1	0	0
Invert El. ft	=	69.00	75.00	0.00	0.00
Length ft	=	100.0	1.0	0.0	0.0
Slope %	=	1.00	1.00	0.00	0.00
N-Value	=	.013	.013	.000	.000
Orif. Coeff.	=	0.50	0.60	0.00	0.00
Multi-Stage	=	-----	Yes	No	No

Weir Structures

		[A]	[B]	[C]	[D]
Crest Len ft	=	12.56	8.00	0.00	0.00
Crest El. ft	=	77.00	78.50	0.00	0.00
Weir Coeff.	=	3.00	3.00	0.00	0.00
Eqn. Exp.	=	1.50	1.50	0.00	0.00
Multi-Stage	=	Yes	Yes	No	No

Tailwater Elevation = 0.00 ft

Note: All outflows have been analyzed under inlet and outlet control.

Stage / Storage / Discharge Table

Stage ft	Storage cuft	Elevation ft N.P.	Clv A cfs	Clv B cfs	Clv C cfs	Clv D cfs	Wr A cfs	Wr B cfs	Wr C cfs	Wr D cfs	Discharge cfs
0.00	0	75.00	11.41	0.00	---	---	0.00	0.00	---	---	0.00
1.00	7,392	76.00	12.43	0.38	---	---	0.00	0.00	---	---	0.38
2.00	15,787	77.00	13.37	0.57	---	---	0.00	0.00	---	---	0.57
3.00	25,243	78.00	14.25	0.00	---	---	37.68	0.00	---	---	14.25
3.50	30,411	78.50	14.67	0.00	---	---	69.22	0.00	---	---	14.67
5.00	48,006	80.00	15.86	0.00	---	---	195.79	44.09	---	---	15.86

Hydrograph Report

English

Hyd. No. 13

Pond 1- 100-Year Storm

Hydrograph type	= Reservoir	Peak discharge	= 14.30 cfs
Storm frequency	= 100 yrs	Time interval	= 10 min
Inflow hyd. No.	= 4	Reservoir name	= BMP
Max. Elevation	= 78.06 ft	Max. Storage	= 25,840 cuft

Storage Indication method used.

Total Volume = 59,046 cuft

Hydrograph Discharge Table

Time (hrs)	Inflow cfs	Elevation ft	Clv A cfs	Clv B cfs	Clv C cfs	Clv D cfs	Wr A cfs	Wr B cfs	Wr C cfs	Wr D cfs	Outflow cfs
0.33	8.97	75.86	12.29	0.35	-----	-----	-----	-----	-----	-----	0.35
0.50	29.91 <<	77.14	13.50	0.59	-----	-----	2.04	-----	-----	-----	2.63
0.67	16.15	78.06 <<	14.30	-----	-----	-----	41.00	-----	-----	-----	14.30 <<
0.83	11.67	78.04	14.28	-----	-----	-----	39.73	-----	-----	-----	14.28
1.00	7.48	77.75	14.03	-----	-----	-----	24.44	-----	-----	-----	14.03
1.17	5.38	77.39	13.72	0.63	-----	-----	9.35	-----	-----	-----	9.98
1.33	4.49	77.23	13.58	0.60	-----	-----	4.34	-----	-----	-----	4.94
1.50	4.19	77.21	13.56	0.60	-----	-----	3.77	-----	-----	-----	4.37
1.67	3.89	77.20	13.55	0.60	-----	-----	3.46	-----	-----	-----	4.06
1.83	0.00	77.12	13.48	0.59	-----	-----	1.72	-----	-----	-----	2.31
2.00	0.00	77.02	13.39	0.57	-----	-----	0.28	-----	-----	-----	0.86
2.17	0.00	76.98	13.35	0.57	-----	-----	-----	-----	-----	-----	0.57
2.33	0.00	76.94	13.31	0.56	-----	-----	-----	-----	-----	-----	0.56
2.50	0.00	76.90	13.28	0.55	-----	-----	-----	-----	-----	-----	0.55
2.67	0.00	76.86	13.24	0.55	-----	-----	-----	-----	-----	-----	0.55
2.83	0.00	76.82	13.20	0.54	-----	-----	-----	-----	-----	-----	0.54
3.00	0.00	76.78	13.17	0.53	-----	-----	-----	-----	-----	-----	0.53
3.17	0.00	76.74	13.13	0.53	-----	-----	-----	-----	-----	-----	0.53
3.33	0.00	76.70	13.10	0.52	-----	-----	-----	-----	-----	-----	0.52
3.50	0.00	76.67	13.07	0.51	-----	-----	-----	-----	-----	-----	0.51
3.67	0.00	76.63	13.03	0.51	-----	-----	-----	-----	-----	-----	0.51
3.83	0.00	76.59	13.00	0.50	-----	-----	-----	-----	-----	-----	0.50
4.00	0.00	76.56	12.96	0.50	-----	-----	-----	-----	-----	-----	0.50
4.17	0.00	76.52	12.93	0.49	-----	-----	-----	-----	-----	-----	0.49
4.33	0.00	76.49	12.90	0.48	-----	-----	-----	-----	-----	-----	0.48
4.50	0.00	76.45	12.87	0.48	-----	-----	-----	-----	-----	-----	0.48
4.67	0.00	76.42	12.83	0.47	-----	-----	-----	-----	-----	-----	0.47
4.83	0.00	76.39	12.80	0.46	-----	-----	-----	-----	-----	-----	0.46
5.00	0.00	76.35	12.77	0.46	-----	-----	-----	-----	-----	-----	0.46
5.17	0.00	76.32	12.74	0.45	-----	-----	-----	-----	-----	-----	0.45
5.33	0.00	76.29	12.71	0.45	-----	-----	-----	-----	-----	-----	0.45
5.50	0.00	76.26	12.68	0.44	-----	-----	-----	-----	-----	-----	0.44
5.67	0.00	76.23	12.65	0.43	-----	-----	-----	-----	-----	-----	0.43
5.83	0.00	76.20	12.62	0.43	-----	-----	-----	-----	-----	-----	0.43
6.00	0.00	76.17	12.59	0.42	-----	-----	-----	-----	-----	-----	0.42
6.17	0.00	76.14	12.56	0.41	-----	-----	-----	-----	-----	-----	0.41

Continues on next page...

Hydrograph Discharge Table

Time (hrs)	Inflow cfs	Elevation ft	Clv A cfs	Clv B cfs	Clv C cfs	Clv D cfs	Wr A cfs	Wr B cfs	Wr C cfs	Wr D cfs	Outflow cfs
6.33	0.00	76.11	12.54	0.41	-----	-----	-----	-----	-----	-----	0.41
6.50	0.00	76.08	12.51	0.40	-----	-----	-----	-----	-----	-----	0.40
6.67	0.00	76.05	12.48	0.39	-----	-----	-----	-----	-----	-----	0.39
6.83	0.00	76.02	12.45	0.39	-----	-----	-----	-----	-----	-----	0.39
7.00	0.00	75.99	12.42	0.38	-----	-----	-----	-----	-----	-----	0.38
7.17	0.00	75.96	12.39	0.37	-----	-----	-----	-----	-----	-----	0.37
7.33	0.00	75.93	12.37	0.37	-----	-----	-----	-----	-----	-----	0.37
7.50	0.00	75.90	12.34	0.36	-----	-----	-----	-----	-----	-----	0.36
7.67	0.00	75.87	12.31	0.35	-----	-----	-----	-----	-----	-----	0.35
7.83	0.00	75.85	12.28	0.35	-----	-----	-----	-----	-----	-----	0.35
8.00	0.00	75.82	12.25	0.34	-----	-----	-----	-----	-----	-----	0.34
8.17	0.00	75.79	12.23	0.33	-----	-----	-----	-----	-----	-----	0.33
8.33	0.00	75.76	12.20	0.32	-----	-----	-----	-----	-----	-----	0.32
8.50	0.00	75.74	12.17	0.32	-----	-----	-----	-----	-----	-----	0.32
8.67	0.00	75.71	12.15	0.31	-----	-----	-----	-----	-----	-----	0.31
8.83	0.00	75.69	12.12	0.30	-----	-----	-----	-----	-----	-----	0.30
9.00	0.00	75.66	12.10	0.30	-----	-----	-----	-----	-----	-----	0.30
9.17	0.00	75.64	12.07	0.29	-----	-----	-----	-----	-----	-----	0.29
9.33	0.00	75.62	12.05	0.28	-----	-----	-----	-----	-----	-----	0.28
9.50	0.00	75.59	12.03	0.27	-----	-----	-----	-----	-----	-----	0.27
9.67	0.00	75.57	12.01	0.26	-----	-----	-----	-----	-----	-----	0.26
9.83	0.00	75.55	11.99	0.25	-----	-----	-----	-----	-----	-----	0.25
10.00	0.00	75.53	11.97	0.24	-----	-----	-----	-----	-----	-----	0.24
10.17	0.00	75.51	11.95	0.24	-----	-----	-----	-----	-----	-----	0.24
10.33	0.00	75.49	11.93	0.22	-----	-----	-----	-----	-----	-----	0.22
10.50	0.00	75.48	11.91	0.21	-----	-----	-----	-----	-----	-----	0.21
10.67	0.00	75.46	11.89	0.20	-----	-----	-----	-----	-----	-----	0.20
10.83	0.00	75.44	11.88	0.19	-----	-----	-----	-----	-----	-----	0.19
11.00	0.00	75.43	11.86	0.17	-----	-----	-----	-----	-----	-----	0.17
11.17	0.00	75.41	11.85	0.16	-----	-----	-----	-----	-----	-----	0.16
11.33	0.00	75.40	11.83	0.15	-----	-----	-----	-----	-----	-----	0.15

...End

Reservoir Report

English

Reservoir No. 1 - BMP

Pond Data

Pond storage is based on known contour areas

Stage / Storage Table

Stage ft	Elevation ft	Contour area sqft	Incr. Storage cuft	Total storage cuft
0.00	75.00	6,918	0	0
1.00	76.00	7,865	7,392	7,392
2.00	77.00	8,926	8,396	15,787
3.00	78.00	9,986	9,456	25,243
3.50	78.50	10,684	5,168	30,411
5.00	80.00	12,776	17,595	48,006

Culvert / Orifice Structures

		[A]	[B]	[C]	[D]
Rise in	=	15.0	4.0	0.0	0.0
Span in	=	15.0	4.0	0.0	0.0
No. Barrels	=	1	1	0	0
Invert El. ft	=	69.00	75.00	0.00	0.00
Length ft	=	100.0	1.0	0.0	0.0
Slope %	=	1.00	1.00	0.00	0.00
N-Value	=	.013	.013	.000	.000
Orif. Coeff.	=	0.50	0.60	0.00	0.00
Multi-Stage	=	-----	Yes	No	No

Weir Structures

		[A]	[B]	[C]	[D]
Crest Len ft	=	12.56	8.00	0.00	0.00
Crest El. ft	=	77.00	78.50	0.00	0.00
Weir Coeff.	=	3.00	3.00	0.00	0.00
Eqn. Exp.	=	1.50	1.50	0.00	0.00
Multi-Stage	=	Yes	Yes	No	No

Tailwater Elevation = 0.00 ft

Note: All outflows have been analyzed under inlet and outlet control.

Stage / Storage / Discharge Table

Stage ft	Storage cuft	Elevation ft	Clv A cfs	Clv B cfs	Clv C cfs	Clv D cfs	Wr A cfs	Wr B cfs	Wr C cfs	Wr D cfs	Discharge cfs
0.00	0	75.00	11.41	0.00	---	---	0.00	0.00	---	---	0.00
1.00	7,392	76.00	12.43	0.38	---	---	0.00	0.00	---	---	0.38
2.00	15,787	77.00	13.37	0.57	---	---	0.00	0.00	---	---	0.57
3.00	25,243	78.00	14.25	0.00	---	---	37.68	0.00	---	---	14.25
3.50	30,411	78.50	14.67	0.00	---	---	69.22	0.00	---	---	14.67
5.00	48,006	80.00	15.86	0.00	---	---	195.79	44.09	---	---	15.86

AES CALCULATIONS

STREAM CHANNEL PROTECTION CALCULATIONS
for
Ironbound Village
AES Project No.: 8914-1

PROPOSED POND VOLUME

Eleva	Depth	Area (sq. ft.)	Incremental Volume (cu. ft.)	Sum Volume (cu. ft.)	Sum Volume (cu. yd.)	Volume Above NPE
70.0	0.0	1,094	0	0	0	
72.0	2.0	2,396	3,490	3,490	129	
73.7	1.7	4,303	5,694	9,184	340	
74.0	0.3	5,971	1,541	10,725	397	
75.0	1.0	6,918	6,445	17,170	636	0
76.0	1.0	7,865	7,392	24,561	910	7,391
77.0	1.0	8,926	8,395	32,957	1,221	15,787
78.0	1.0	9,986	9,456	42,412	1,571	25,242
78.5	0.5	10,684	5,168	47,580	1,762	30,410
80.0	1.5	12,776	17,595	65,175	2,414	48,005

RELEASE RATE REQUIRED TO DETAINED VOLUME FOR 24 HOURS

MUST RATIONAL CRITICAL STORM OVR.

Required Volume based upon 1-Year, 24-Hour Storm Hydrograph = 15,028 cubic feet ✓

Volume provided based upon above table = 15,787 cubic feet

Elevation of water surface associated with provided volume = 77.0

Elevation of Low Flow Orifice = 75.0

Average Head, in feet = 1.0

Average Release Rate Calculation $\frac{15{,}787 \text{ cubic feet}}{(24 \text{ hours} \times 60 \text{ minutes/hour} \times 60 \text{ seconds/ minute})}$ = 0.2 cfs

LOW FLOW ORIFICE DIAMETER REQUIRED TO MAINTAIN AVERAGE RELEASE RATE

Diameter of Low Flow Orifice = 2 * (Q / ((64.32 * (h / 2)) ^ (1/2) * 0.6 * 3.14))) ^ (1/2)

where, Q equals average release rate (cfs), h equals average head (feet)

Diameter of Low Flow Orifice = 0.30 feet, or 4 inches

CALEB Hurst
CJ Boorar
CANDRATEK

MODIFIED RATIONAL METHOD HYDROGRAPH

Q = CiA * Units Conversion; Where Conversion = 43560 / (12 * 3600)

:

Tag	Freq	File	IDF Curve
Dev..1	1	JCC.IDQ	e = .9050 b = 63.0330 d = 12.2000

Td = .5333 hrs

Tag	Freq (years)	C	C adj factor	C final	I in/hr	Area acres	Peak Q cfs
Dev..1	1	.550	1.000	.550	2.0439	6.900	7.82

HYG file = S:\JOBS\8914\01-IBV\DESIGN\POND-E&S\HAESTAD\IBV-MR.HYG
HYG ID = DRAINAGE AREA
HYG Tag = Dev..1

Peak Discharge = 7.82 cfs
Time to Peak = .1700 hrs
** HYG Volume = .345 ac-ft * * = 15,028 CF

HYDROGRAPH ORDINATES (cfs)
Output Time increment = .0100 hrs
Time on left represents time for first value in each row.

Time hrs					
.0000	.00	.46	.92	1.38	1.84
.0500	2.30	2.76	3.22	3.68	4.14
.1000	4.60	5.06	5.52	5.98	6.44
.1500	6.90	7.36	7.82	7.82	7.82
.2000	7.82	7.82	7.82	7.82	7.82
.2500	7.82	7.82	7.82	7.82	7.82
.3000	7.82	7.82	7.82	7.82	7.82
.3500	7.82	7.82	7.82	7.82	7.82
.4000	7.82	7.82	7.82	7.82	7.82
.4500	7.82	7.82	7.82	7.82	7.82
.5000	7.82	7.82	7.82	7.82	7.51
.5500	7.05	6.59	6.13	5.67	5.21
.6000	4.75	4.29	3.83	3.37	2.91

```
*************************************************************************
*************************************************************************
*                                                                       *
*                                                                       *
*                        MODIFIED RATIONAL METHOD                       *
*           ---- Grand Summary For All Storm Frequencies ----           *
*                                                                       *
*                                                                       *
*************************************************************************
*************************************************************************
```

Q = CiA * Units Conversion; Where Conversion = 43560 / (12 * 3600)

Area = 6.900 acres Tc = .1700 hrs 10.2 min.

Freq. years	Adjusted 'C'	Duration hrs	I in/hr	Post Qpeak cfs	Pre Allowable cfs	VOLUMES Inflow ac-ft	Storage ac-ft
1	.550	.5333	2.0439	7.82	5.38	.345	.189
2	.550	.5833	2.3405	8.96	6.31	.432	.235
10	.550	.6667	3.0634	11.72	8.43	.646	.355
25	.550	.7167	3.4127	13.06	9.52	.773	.425
100	.550	.7833	3.9690	15.19	11.22	.983	.541

MASTER DESIGN STORM SUMMARY

Default Network Design Storm File, ID JCC.IDQ jcc

i = b / ((T + d)**e)

Where: i = rainfall intensity (in/hr)
T = rainfall duration (min)
e, b, d = rainfall equation coefficients

Return Event	Rainfall Type	e coeff	b coeff	d coeff
Dev..1	I-D-F from e, b, d coeff.	.9050	63.0330	12.2000
Dev..2	I-D-F from e, b, d coeff.	.9070	79.8580	14.0000
Dev.10	I-D-F from e, b, d coeff.	.9430	143.7170	19.2000
Dev.25	I-D-F from e, b, d coeff.	.9420	172.1050	21.2000
Dev100	I-D-F from e, b, d coeff.	.9860	273.9490	26.3000

MASTER NETWORK SUMMARY
Modified Rational Method Network

(*Node=Outfall; +Node=Diversion;)
(Trun= HYG Truncation: Blank=None; L=Left; R=Rt; LR=Left&Rt)

Storage Node ID	Type	Return Event	HYG Vol ac-ft	Trun	Qpeak hrs	Qpeak cfs	Max WSEL ft	Max Pond ac-ft
DRAINAGE AREA	AREA	1	.345		.1700	7.82		
DRAINAGE AREA	AREA	2	.432		.1700	8.96		
DRAINAGE AREA	AREA	10	.646		.1700	11.72		
DRAINAGE AREA	AREA	25	.773		.1700	13.06		
DRAINAGE AREA	AREA	100	.983		.1700	15.19		
*OUTFALL	JCT	1	.340		.6700	.53		
*OUTFALL	JCT	2	.425		.6900	3.14		
*OUTFALL	JCT	10	.639		.7000	9.60		
*OUTFALL	JCT	25	.766		.7400	11.23		
*OUTFALL	JCT	100	.976		.8000	13.21		
POND IN	POND	1	.345		.1700	7.82		
POND IN	POND	2	.432		.1700	8.96		

MASTER NETWORK SUMMARY
Modified Rational Method Network

(*Node=Outfall; +Node=Diversion;)
(Trun= HYG Truncation: Blank=None; L=Left; R=Rt; LR=Left&Rt)

Storage Node ID		Type	Return Event	HYG Vol ac-ft	Trun	Qpeak hrs	Qpeak cfs	Max WSEL ft		Max Pond ac-ft
POND	IN	POND	10	.646		.1700	11.72			
POND	IN	POND	25	.773		.1700	13.06			
POND	IN	POND	100	.983		.1700	15.19			
POND	OUT	POND	1	.340		.6700	.53	76.82		.716
POND	OUT	POND	2	.425		.6900	3.14	77.13		.780
POND	OUT	POND	10	.639		.7000	9.60	77.45		.847
POND	OUT	POND	25	.766		.7400	11.23	77.57		.874
POND	OUT	POND	100	.976		.8000	13.21	77.80	OHW	.925

Q_{OUT} ELEV.

File.... S:\JOBS\8914\01-IBV\DESIGN\POND-E&S\HAESTAD\POND.PPW

REQUESTED POND WS ELEVATIONS:

Min. Elev.= 70.00 ft
Increment = .50 ft
Max. Elev.= 80.00 ft

****
OUTLET CONNECTIVITY
****

---> Forward Flow Only (UpStream to DnStream)
<--- Reverse Flow Only (DnStream to UpStream)
<---> Forward and Reverse Both Allowed

Structure	No.		Outfall	E1, ft	E2, ft
Weir-Rectangular	SW	--->	TW	78.500	80.000
Stand Pipe	SP	--->	CV	77.000	80.000
Orifice-Circular	OR	--->	CV	75.000	80.000
Culvert-Circular	CV	--->	TW	69.000	80.000
TW SETUP, DS Channel					

File.... S:\JOBS\8914\01-IBV\DESIGN\POND-E&S\HAESTAD\POND.PPW

OUTLET STRUCTURE INPUT DATA

```
Structure ID       = SW
Structure Type     = Weir-Rectangular
-----------------------------------
# of Openings      =         1
Crest Elev.        =     78.50 ft
Weir Length        =      8.00 ft
Weir Coeff.        =  3.000000

Weir TW effects      (Use adjustment equation)
```

```
Structure ID       = SP
Structure Type     = Stand Pipe
-----------------------------------
# of Openings      =         1
Invert Elev.       =     77.00 ft
Diameter           =    3.0000 ft
Orifice Area       =    7.0686 sq.ft
Orifice Coeff.     =      .600
Weir Length        =      9.42 ft
Weir Coeff.        =     3.000
K, Submerged       =      .000
K, Reverse         =     1.000
Kb,Barrel          =   .000000  (per ft of full flow)
Barrel Length      =       .00 ft
Mannings n         =     .0000
```

```
Structure ID       = OR
Structure Type     = Orifice-Circular
-----------------------------------
# of Openings      =         1
Invert Elev.       =     75.00 ft
Diameter           =     .3300 ft
Orifice Coeff.     =      .600
```

File.... S:\JOBS\8914\01-IBV\DESIGN\POND-E&S\HAESTAD\POND.PPW

OUTLET STRUCTURE INPUT DATA

```
Structure ID       = CV
Structure Type     = Culvert-Circular
-----------------------------------
No. Barrels        =         1
Barrel Diameter    =    1.2500 ft
Upstream Invert    =     69.00 ft
Dnstream Invert    =     68.00 ft
Horiz. Length      =    100.00 ft
Barrel Length      =    100.01 ft
Barrel Slope       =    .01000 ft/ft

OUTLET CONTROL DATA...
Mannings n         =     .0130
Ke                 =     .5000  (forward entrance loss)
Kb                 =   .023225  (per ft of full flow)
Kr                 =     .5000  (reverse entrance loss)
HW Convergence     =      .001  +/- ft

INLET CONTROL DATA...
Equation form      =         1
Inlet Control K    =     .0078
Inlet Control M    =    2.0000
Inlet Control c    =    .02920
Inlet Control Y    =     .7400
T1 ratio (HW/D)    =     1.131
T2 ratio (HW/D)    =     1.202
Slope Factor       =     -.500

Use unsubmerged inlet control Form 1 equ. below T1 elev.
Use   submerged inlet control Form 1 equ. above T2 elev.

In transition zone between unsubmerged and submerged inlet control,
interpolate between flows at T1 & T2...
At T1 Elev =     70.41 ft  --->  Flow =      4.80 cfs
At T2 Elev =     70.50 ft  --->  Flow =      5.49 cfs


Structure ID       = TW
Structure Type     = TW SETUP, DS Channel
-----------------------------------
FREE OUTFALL CONDITIONS SPECIFIED

CONVERGENCE TOLERANCES...
Maximum Iterations=    30
Min. TW tolerance =    .01 ft
Max. TW tolerance =    .01 ft
Min. HW tolerance =    .01 ft
Max. HW tolerance =    .01 ft
Min.  Q tolerance =    .10 cfs
Max.  Q tolerance =    .10 cfs
```

File.... S:\JOBS\8914\01-IBV\DESIGN\POND-E&S\HAESTAD\POND.PPW

***** COMPOSITE OUTFLOW SUMMARY ****

WS Elev, Total Q		Notes		
		Converge		
Elev. ft	Q cfs	TW Elev ft	Error +/-ft	Contributing Structures
70.00	.00	Free Outfall		(no Q: SW,SP,OR,CV)
70.50	.00	Free Outfall		(no Q: SW,SP,OR,CV)
71.00	.00	Free Outfall		(no Q: SW,SP,OR,CV)
71.50	.00	Free Outfall		(no Q: SW,SP,OR,CV)
72.00	.00	Free Outfall		(no Q: SW,SP,OR,CV)
72.50	.00	Free Outfall		(no Q: SW,SP,OR,CV)
73.00	.00	Free Outfall		(no Q: SW,SP,OR,CV)
73.50	.00	Free Outfall		(no Q: SW,SP,OR,CV)
74.00	.00	Free Outfall		(no Q: SW,SP,OR,CV)
74.50	.00	Free Outfall		(no Q: SW,SP,OR,CV)
75.00	.00	Free Outfall		(no Q: SW,SP,OR,CV)
75.50	.24	Free Outfall		OR,CV (no Q: SW,SP)
76.00	.38	Free Outfall		OR,CV (no Q: SW,SP)
76.50	.48	Free Outfall		OR,CV (no Q: SW,SP)
77.00	.56	Free Outfall		OR,CV (no Q: SW,SP)
77.50	10.63	Free Outfall		SP,OR,CV (no Q: SW)
78.00	14.90	Free Outfall		SP,CV (no Q: SW,OR)
78.50	15.32	Free Outfall		SP,CV (no Q: SW,OR)
79.00	24.21	Free Outfall		SW,SP,CV (no Q: OR)
79.50	40.12	Free Outfall		SW,SP,CV (no Q: OR)
80.00	60.60	Free Outfall		SW,SP,CV (no Q: OR)

WORKSHEET FOR BMP POINT SYSTEM

TOTAL SITE AREA = 7.75 AC.

A. STRUCTURAL BMP POINT ALLOCATION

BMP	BMP Points		Fraction of Site Served	Weighted BMP Points
Wet Pond (E.D.)	10	x	(6.30+0.59) ÷ 7.75 =	8.89
TOTAL WEIGHTED STRUCTURAL BMP POINTS:				8.89

B. NATURAL OPEN SPACE CREDIT

Adjacent To Wetland	Natural Open Space Credit		Fraction of Site		Points for Natural Open Space
No	10	x	0.94 ÷ 7.75	=	1.21

C. TOTAL WEIGHTED POINTS

Structural BMP Points		Natural Open Space Points		Total
8.89	+	1.21	=	10.10

NOTES:

1) Natural open space has been placed in a conservation easement.

JOBS\8914\01-IBV\Design\Pond\bmp-pnts.doc

esign\pond

pre-dev.dwg

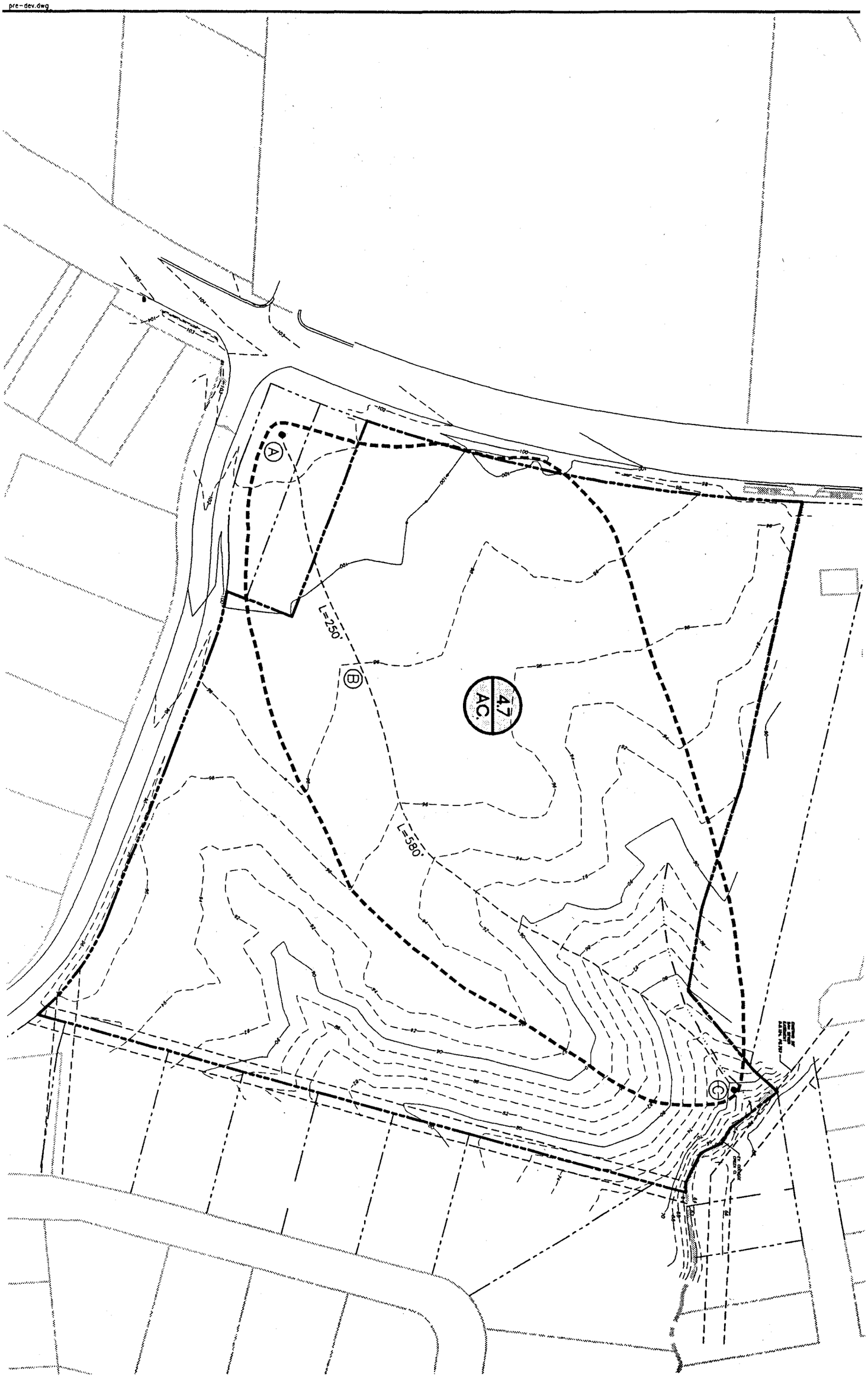

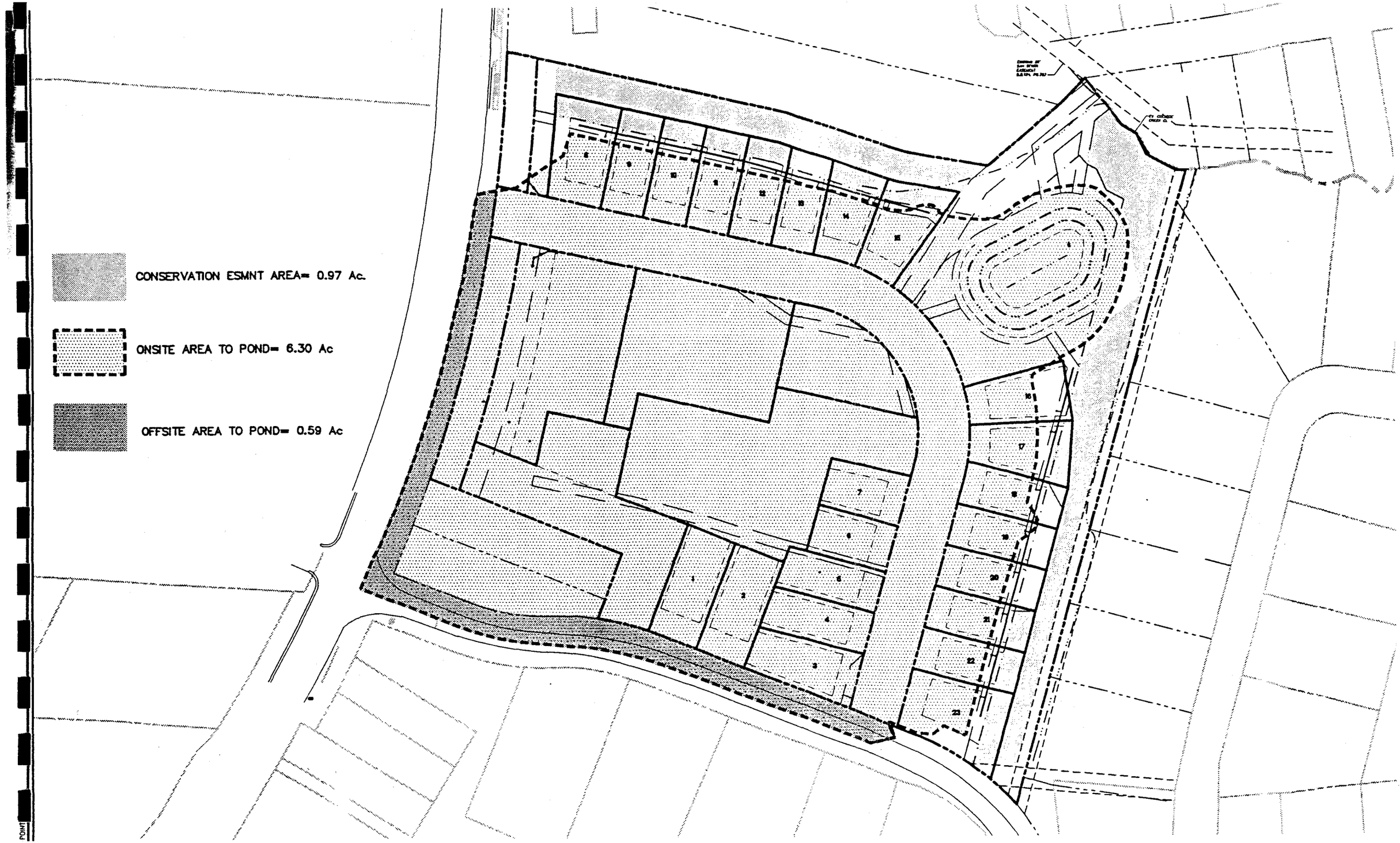
CONSERVATION ESMNT AREA= 0.97 Ac.
ONSITE AREA TO POND= 6.30 Ac
OFFSITE AREA TO POND= 0.59 Ac

Impervious Area and Required Volume Calculations
for
Ironbound Village
AES# 8914-1

Impervious items	Totals		Acres
Houses	23 Ea	1350 SF	0.71
T.H.	7 Ea	912 SF	0.15
Office	4 Ea	2400 SF	0.22
Drveways	23 Ea	312 SF	0.16
Roads:			
Public	870 LF	31 Width	0.62
Private	530 LF	60 Width	0.73
Pond Access Rd	340 LF	12 Width	0.09
Wet Pond Surface @ N.P.	105 LF	65 Width	0.16
Sidewalks:			
w/in R/W	850 LF	8 Width	0.16
Offsite Road	500 LF	12 Width	0.14
		Total Impervious Area (TIA)	**3.14**

Area to Pond = 6.8 Acres

Percent Impervious = 46%

Pond's Required Wet Volume = (1")(ft/12")(TIA Ac)(43560 sf/Ac) = 11,390 c.f.

Pond's Required Dry Volume = (1")(ft/12")(TIA Ac)(43560 sf/Ac) = 11,390 c.f.

Sediment Forebay's Required Volume = (0.1")(ft/12")(TIA Ac)(43560 sf/Ac) = 1,139 c.f.

BMP VOLUME CALCULATIONS
for
STONEHOUSE Ph 1, Bent Tree (Sect. V-B) Ph3
AES Project No.: 8878-00

PROPOSED POND VOLUME

Eleva	Depth	Area (sq. ft.)	Incremental Volume (cu. ft.)	Sum Volume (cu. ft.)	Sum Volume (cu. yd.)	Volume Above NPE
70.0	0.0	1,094	0	0	0	
72.0	2.0	2,396	3,490	3,490	129	
73.7	1.7	4,303	5,694	9,184	340	
74.0	0.3	5,971	1,541	10,725	397	
75.0	1.0	6,918	6,445	17,170	636	0
76.0	1.0	7,865	7,392	24,561	910	7,391
77.0	1.0	8,926	8,396	32,957	1,221	15,787
78.0	1.0	9,986	9,456	42,413	1,571	25,243
78.5	0.5	10,684	5,168	47,580	1,762	30,410
80.0	1.5	12,776	17,595	65,175	2,414	48,005

RELEASE RATE REQUIRED TO DETAINED VOLUME FOR 24 HOURS

Required BMP Volume (based upon Impervious Area) = 11,390 cubic feet

Volume Provided (based upon above table) = 15,787 cubic feet

Elevation of water surface associated with provided volume = 77.0

Elevation of Low Flow Orifice = 75.0

Average Head, in feet = 1.0

Average Release Rate Calculation $\frac{15{,}787 \text{ cubic feet}}{(24 \text{ hours} \times 60 \text{ minutes/hour} \times 60 \text{ seconds/ minute})}$ = 0.2 cfs

LOW FLOW ORIFICE DIAMETER REQUIRED TO MAINTAIN AVERAGE RELEASE RATE

Diameter of Low Flow Orifice = 2 * (Q / ((64.32 * (h / 2)) ^ (1/2) * 0.6 * 3.14))) ^ (1/2)

where, Q equals average release rate (cfs), h equals average head (feet)

Diameter of Low Flow Orifice = 0.30 feet, or 4 inches

Hydrograph Summary Report

Hyd. No.	Hydrograph type (origin)	Peak flow (cfs)	Time interval (min)	Time to peak (min)	Volume (cuft)	Return period (yrs)	Inflow hyd(s)	Maximum elevation (ft)	Maximum storage (cuft)	Hydrograph description
1	Rational	7.8	1	5	2,922	2	—	—	—	2yr Pre
2	Rational	10.0	1	5	3,768	10	—	—	—	10yr Pre
3	Rational	13.0	1	5	4,858	100	—	—	—	100yr Pre
5	Rational	18.2	1	5	6,830	1	—	—	—	1yr Post
6	Rational	21.0	1	5	7,864	2	—	—	—	2yr Post
7	Rational	27.0	1	5	10,141	10	—	—	—	10yr Post
8	Rational	34.9	1	5	13,074	100	—	—	—	100yr Post
10	Reservoir	0.4	1	12	6,406	1	5	75.87	23,584	1yr routing
11	Reservoir	0.4	1	12	7,385	2	6	76.00	24,561	2yr routing
12	Reservoir	0.4	1	12	9,538	10	7	76.26	26,718	10yr routing
13	Reservoir	0.5	1	12	12,312	100	8	76.59 DHW	29,503	100yr routing

Proj. file: Pond.gpw | IDF file: JCChydrographs.IDF | Run date: 06-21-2001

LANDMARK DESIGN GROUP

CC022 FINAL COMPS.

January 16, 2002

Mr. Scott Thomas, P.E.
James City County Environmental Division
P.O. Box 8784
Williamsburg, VA 23187-8784

JAN 2002 RECEIVED ENVIRONMENTAL DIVISION

Re: Ironbound Village Subdivision and Site Plan
Case Nos. S-36-01 and SP-29-01
LMDG Job No. 2001112-000.07

Dear Scott:

We are pleased to submit, for approval, two (2) copies of the revised pond routing calculations for the above referenced project. As previously discussed, Cutting Edge Development, L.L.C. has employed our firm to assist them in obtaining final approval for these projects. The information we are submitting to you is a supplement to the plans and calculations that were previously submitted by Cutting Edge's original consultant, AES Consulting Engineers.

As we discussed last month, the developer is concerned with maintenance of the outfall structure due to the riser being thirty-six (36) inches in diameter. We have revised the calculations, per our discussions, to show the effects of using a forty-eight (48) inch riser. The calculations show no detrimental rise in the pond due to the increase in riser diameter.

If any questions or comments should arise, please do not hesitate to contact us.

Best regards,
The LandMark Design Group Inc.

Charles J. Bodnar, P.E.
Project Manager

Enclosures

CJB/cb

Approval

Based on a review of supporting information received January 17th 2002, a request to change riser structure from 36-inch diameter concrete to 48-inch diameter concrete reviewed and found acceptable. This revision is considered a minor plan change, as based on our review of information, there is no considerable change in BMP hydraulics or layout and configuration. Riser shall be reinforced concrete pipe with O-ring gaskets meeting the requirements of ASTM C361 or ASTM C76 with gaskets meeting ASTM C443; or precast manhole meeting ASTM C478 with profile gaskets meeting ASTM C443. Anti-vortex/trash rack device size shall also change appropriately consistent with the riser size change and details as shown on the previously approved plan. Record drawings (as-builts) shall reflect final riser type and size used in the field.

Scott J. Thomas, P.E.
Civil Engineer
Environmental Division

1-23-02
Date

File: 2001112-000.07
Cutting Edge Development, L.L.C.

Engineers • Planners • Surveyors • Landscape Architects • Environmental Consultants
4029 Ironbound Road, Suite 100, Williamsburg, VA 23188 (757) 253-2975 FAX: (757) 229-0049 lmdg@landmarkdgwb.com

IRONBOUND VILLAGE

IRONBOUND ROAD

PHASES 1 AND 2

DECEMBER 2001

LMDG FILE NO. 2001112-000.07

SUPPORTING ENGINEERING DOCUMENTS

- DRAINAGE CALCULATIONS
  - SUMMARY OF DATA
  - LMDG ROUTING CALCULATIONS
  - AES CALCULATIONS

SJT CHECK SET.
(FINAL COMPS)
S-36-01
SP-29-01
REVISED COMPS, RISER SIZE CHANGE 36"ϕ TO 48"ϕ
OK SJT 1-23-02

LANDMARK
DESIGN GROUP

Engineers • Planners • Surveyors • Landscape Architects • Environmental Consultants
4029 Ironbound Road, Suite 100, Williamsburg, VA 23188 (757) 253-2975 FAX: (757) 229-0049 lmdg@landmarkdgwb.com

SUMMARY OF DATA

Storm Event	AES Results	LMDG Results
2-year pre-developed	6.31 ? 7.8	6.31 ✓
2-year post-developed	8.96 ✓	16.82 ✓
2-year routed outflow	3.14 ✓	7.28 ✓
2-year rise elevation	77.13 ✓	77.31 ✓
10-year pre-developed	8.43 ? 10.0	8.43 ✓
10-year post-developed	11.72 ✓	22.46 ✓
10-year routed outflow	9.60 ✓	11.71 ✓
10-year rise elevation	77.45 ✓	77.44 ✓
25-year pre-developed	9.52 ?	9.52 ✓
25-year post-developed	13.06 ✓	25.37 ✓
25-year routed outflow	11.23 ✓	13.99 ✓
25-year rise elevation	77.57 ✓	77.69 ✓
100-year pre-developed	11.22 ? 13.0	11.22 ✓
100-year post-developed	15.19 ✓	29.91 ✓
100-year routed outflow	13.21 ✓	14.30 ✓
100-year rise elevation	77.80 ✓	78.06 ✓ DHW

FINAL ROUTED

2-YEAR 7.28 CFS @ 77.31

10-YEAR 11.71 CFS @ 77.44

100-YEAR 14.30 CFS @ 78.06

2-YEAR
7.28 CFS < 7.8 CFS
AES PRE-2 = 7.8 CFS
LDG PRE-2 = 6.31 CFS

DA pre – 4.7 AC 4.74 AC.
DA post – 6.90 AC. C=0.55
T_c = 10.2 min

Impervious to Perv = 3.14 AC (46%)

- MEETS PRE-2 7.8 CFS
- NO CHANGE IN EXT DET (WQV) SCPV) ALL ORIF. OR POND VOLUME/ GRADING.
- FLOTATION OK

File: Universal Post.xls
PROJECT: **IRONBOUND VILLAGE**
Description: **Postdevelopment to BMP**

LandMark Design Group
4029 Ironbound Road, Suite 100
Williamsburg, VA 23188

Date: 19-Dec-01
Revised:

UNIVERSAL RATIONAL METHOD FOR HYDROGRAPH GENERATION

Drainage Area	=	6.89	Acres
Runoff Coefficient	=	0.55	
Time of Concentration	=	10.20	Min
2 Yr computed peak discharge	=	16.82	cfs
10 Yr computed peak discharge	=	22.46	cfs
25 Yr computed peak discharge	=	25.37	cfs
100 Yr computed peak discharge	=	29.91	cfs

COMPUTED HYDROGRAPH VERTEX POINTS

2 Yr Fequency		10 Yr Frequency		25 Yr Frequency		100 Yr Frequency	
Time (min)	Q (cfs)	Time (min)	Q (cfs)	Time (min)	Q (cfs)	Time (min)	Q (cfs)
0.0	0.00	0.0	0.00	0.0	0.00	0.0	0.00
10.2	3.53	10.2	4.72	10.2	5.33	10.2	6.28
20.4	5.05	20.4	6.74	20.4	7.61	20.4	8.97
30.6	16.82	30.6	22.46	30.6	25.37	30.6	29.91
40.8	9.08	40.8	12.13	40.8	13.70	40.8	16.15
51.0	6.56	51.0	8.76	51.0	9.89	51.0	11.67
61.2	4.20	61.2	5.62	61.2	6.34	61.2	7.48
71.4	3.03	71.4	4.04	71.4	4.57	71.4	5.38
81.6	2.52	81.6	3.37	81.6	3.81	81.6	4.49
91.8	2.35	91.8	3.14	91.8	3.55	91.8	4.19
102.0	2.19	102.0	2.92	102.0	3.30	102.0	3.89
112.2	0.00	112.2	0.00	112.2	0.00	112.2	0.00

EQUATIONS

I=B/(tc+D)^E B,D,E constants based on NWS Hydro 35
tp=3*tc
tb=11*tc
Qp=C*I*A

Hydrograph Summary Report

Hyd. No.	Hydrograph type (origin)	Peak flow (cfs)	Time interval (min)	Time to peak (min)	Volume (cuft)	Return period (yrs)	Inflow hyd(s)	Maximum elevation (ft)	Maximum storage (cuft)	Hydrograph description	
1	Manual	16.82	10	30	33,198	2	----	------	------	2-Year Post-Develo	POST INFLOW
2	Manual	22.46	10	30	44,340	10	----	------	------	10-Year Post-Devel	
3	Manual	25.37	10	30	50,142	25	----	------	------	25-Year Post-Devel	
4	Manual	29.91	10	30	59,046	100	----	------	------	100-Year Post-Deve	
5	Manual	6.31	10	30	12,462	2	----	------	------	2-Year Pre-Develop	PRE
6	Manual	8.43	10	30	16,644	10	----	------	------	10-Year Pre-Develo	
7	Manual	9.52	10	30	18,792	25	----	------	------	25-Year Pre-Develo	
8	Manual	11.22	10	30	22,158	100	----	------	------	100-Year Pre-Devel	
10	Reservoir	7.28	10	50	33,198	2	1	77.31	18,759	Pond 1 - 2-Year St	Routed
11	Reservoir	11.71	10	40	44,340	10	2	77.44	19,971	Pond 1 - 10-year s	
12	Reservoir	13.99	10	40	50,142	25	3	77.69	22,356	Pond 1 - 25-Year S	
13	Reservoir	14.30	10	40	59,046	100	4	78.06	25,840	Pond 1- 100-Year S	

Hydrograph Report

English

Hyd. No. 10

Pond 1 - 2-Year Storm

Hydrograph type	= Reservoir	Peak discharge	= 7.28 cfs
Storm frequency	= 2 yrs	Time interval	= 10 min
Inflow hyd. No.	= 1	Reservoir name	= BMP
Max. Elevation	= 77.31 ft	Max. Storage	= 18,759 cuft

Storage Indication method used.

Total Volume = 33,198 cuft

Hydrograph Discharge Table

Time (hrs)	Inflow cfs	Elevation ft	Clv A cfs	Clv B cfs	Clv C cfs	Clv D cfs	Wr A cfs	Wr B cfs	Wr C cfs	Wr D cfs	Outflow cfs
0.33	5.05	75.48	11.91	0.22	-----	-----	-----	-----	-----	-----	0.22
0.50	16.82 <<	76.30	12.72	0.45	-----	-----	-----	-----	-----	-----	0.45
0.67	9.08	77.12	13.48	0.59	-----	-----	1.58	-----	-----	-----	2.17
0.83	6.56	77.31 <<	13.65	0.62	-----	-----	6.67	-----	-----	-----	7.28 <<
1.00	4.20	77.25	13.60	0.61	-----	-----	4.83	-----	-----	-----	5.44
1.17	3.03	77.19	13.54	0.60	-----	-----	3.15	-----	-----	-----	3.75
1.33	2.52	77.15	13.51	0.59	-----	-----	2.36	-----	-----	-----	2.95
1.50	2.35	77.13	13.49	0.59	-----	-----	1.94	-----	-----	-----	2.53
1.67	2.19	77.12	13.48	0.59	-----	-----	1.73	-----	-----	-----	2.32
1.83	0.00	77.07	13.44	0.58	-----	-----	0.88	-----	-----	-----	1.46
2.00	0.00	77.01	13.38	0.57	-----	-----	0.08	-----	-----	-----	0.65
2.17	0.00	76.96	13.34	0.56	-----	-----	-----	-----	-----	-----	0.56
2.33	0.00	76.92	13.30	0.56	-----	-----	-----	-----	-----	-----	0.56
2.50	0.00	76.88	13.27	0.55	-----	-----	-----	-----	-----	-----	0.55
2.67	0.00	76.85	13.23	0.54	-----	-----	-----	-----	-----	-----	0.54
2.83	0.00	76.81	13.19	0.54	-----	-----	-----	-----	-----	-----	0.54
3.00	0.00	76.77	13.16	0.53	-----	-----	-----	-----	-----	-----	0.53
3.17	0.00	76.73	13.12	0.53	-----	-----	-----	-----	-----	-----	0.53
3.33	0.00	76.69	13.09	0.52	-----	-----	-----	-----	-----	-----	0.52
3.50	0.00	76.66	13.06	0.51	-----	-----	-----	-----	-----	-----	0.51
3.67	0.00	76.62	13.02	0.51	-----	-----	-----	-----	-----	-----	0.51
3.83	0.00	76.58	12.99	0.50	-----	-----	-----	-----	-----	-----	0.50
4.00	0.00	76.55	12.96	0.49	-----	-----	-----	-----	-----	-----	0.49
4.17	0.00	76.51	12.92	0.49	-----	-----	-----	-----	-----	-----	0.49
4.33	0.00	76.48	12.89	0.48	-----	-----	-----	-----	-----	-----	0.48
4.50	0.00	76.45	12.86	0.47	-----	-----	-----	-----	-----	-----	0.47
4.67	0.00	76.41	12.83	0.47	-----	-----	-----	-----	-----	-----	0.47
4.83	0.00	76.38	12.79	0.46	-----	-----	-----	-----	-----	-----	0.46
5.00	0.00	76.35	12.76	0.46	-----	-----	-----	-----	-----	-----	0.46
5.17	0.00	76.31	12.73	0.45	-----	-----	-----	-----	-----	-----	0.45
5.33	0.00	76.28	12.70	0.44	-----	-----	-----	-----	-----	-----	0.44
5.50	0.00	76.25	12.67	0.44	-----	-----	-----	-----	-----	-----	0.44
5.67	0.00	76.22	12.64	0.43	-----	-----	-----	-----	-----	-----	0.43
5.83	0.00	76.19	12.61	0.42	-----	-----	-----	-----	-----	-----	0.42
6.00	0.00	76.16	12.58	0.42	-----	-----	-----	-----	-----	-----	0.42
6.17	0.00	76.13	12.56	0.41	-----	-----	-----	-----	-----	-----	0.41

Continues on next page...

Hydrograph Discharge Table

Time (hrs)	Inflow cfs	Elevation ft	Clv A cfs	Clv B cfs	Clv C cfs	Clv D cfs	Wr A cfs	Wr B cfs	Wr C cfs	Wr D cfs	Outflow cfs
6.33	0.00	76.10	12.53	0.41	-----	-----	-----	-----	-----	-----	0.41
6.50	0.00	76.07	12.50	0.40	-----	-----	-----	-----	-----	-----	0.40
6.67	0.00	76.04	12.47	0.39	-----	-----	-----	-----	-----	-----	0.39
6.83	0.00	76.01	12.44	0.39	-----	-----	-----	-----	-----	-----	0.39
7.00	0.00	75.98	12.42	0.38	-----	-----	-----	-----	-----	-----	0.38
7.17	0.00	75.95	12.39	0.37	-----	-----	-----	-----	-----	-----	0.37
7.33	0.00	75.92	12.36	0.37	-----	-----	-----	-----	-----	-----	0.37
7.50	0.00	75.89	12.33	0.36	-----	-----	-----	-----	-----	-----	0.36
7.67	0.00	75.87	12.30	0.35	-----	-----	-----	-----	-----	-----	0.35
7.83	0.00	75.84	12.27	0.34	-----	-----	-----	-----	-----	-----	0.34
8.00	0.00	75.81	12.24	0.34	-----	-----	-----	-----	-----	-----	0.34
8.17	0.00	75.78	12.22	0.33	-----	-----	-----	-----	-----	-----	0.33
8.33	0.00	75.76	12.19	0.32	-----	-----	-----	-----	-----	-----	0.32
8.50	0.00	75.73	12.17	0.32	-----	-----	-----	-----	-----	-----	0.32
8.67	0.00	75.71	12.14	0.31	-----	-----	-----	-----	-----	-----	0.31
8.83	0.00	75.68	12.12	0.30	-----	-----	-----	-----	-----	-----	0.30
9.00	0.00	75.66	12.09	0.29	-----	-----	-----	-----	-----	-----	0.29
9.17	0.00	75.63	12.07	0.29	-----	-----	-----	-----	-----	-----	0.29
9.33	0.00	75.61	12.04	0.28	-----	-----	-----	-----	-----	-----	0.28
9.50	0.00	75.59	12.02	0.27	-----	-----	-----	-----	-----	-----	0.27
9.67	0.00	75.57	12.00	0.26	-----	-----	-----	-----	-----	-----	0.26
9.83	0.00	75.55	11.98	0.25	-----	-----	-----	-----	-----	-----	0.25
10.00	0.00	75.53	11.96	0.24	-----	-----	-----	-----	-----	-----	0.24
10.17	0.00	75.51	11.94	0.23	-----	-----	-----	-----	-----	-----	0.23
10.33	0.00	75.49	11.92	0.22	-----	-----	-----	-----	-----	-----	0.22
10.50	0.00	75.47	11.90	0.21	-----	-----	-----	-----	-----	-----	0.21
10.67	0.00	75.45	11.89	0.19	-----	-----	-----	-----	-----	-----	0.19
10.83	0.00	75.44	11.87	0.18	-----	-----	-----	-----	-----	-----	0.18
11.00	0.00	75.42	11.86	0.17	-----	-----	-----	-----	-----	-----	0.17
11.17	0.00	75.41	11.84	0.16	-----	-----	-----	-----	-----	-----	0.16
11.33	0.00	75.40	11.83	0.15	-----	-----	-----	-----	-----	-----	0.15
11.50	0.00	75.39	11.82	0.14	-----	-----	-----	-----	-----	-----	0.14
11.67	0.00	75.38	11.81	0.13	-----	-----	-----	-----	-----	-----	0.13
11.83	0.00	75.37	11.80	0.12	-----	-----	-----	-----	-----	-----	0.12
12.00	0.00	75.36	11.79	0.11	-----	-----	-----	-----	-----	-----	0.11
12.17	0.00	75.35	11.78	0.10	-----	-----	-----	-----	-----	-----	0.10
12.33	0.00	75.34	11.77	0.09	-----	-----	-----	-----	-----	-----	0.09
12.50	0.00	75.33	11.76	0.09	-----	-----	-----	-----	-----	-----	0.09
12.67	0.00	75.33	11.76	0.08	-----	-----	-----	-----	-----	-----	0.08

...End

Reservoir Report

English

Reservoir No. 1 - BMP

Pond Data

Pond storage is based on known contour areas

Stage / Storage Table

Stage ft	Elevation ft	Contour area sqft	Incr. Storage cuft	Total storage cuft
0.00	75.00	6,918	0	0
1.00	76.00	7,865	7,392	7,392
2.00	77.00	8,926	8,396	15,787
3.00	78.00	9,986	9,456	25,243
3.50	78.50	10,684	5,168	30,411
5.00	80.00	12,776	17,595	48,006

Culvert / Orifice Structures

	BARREL [A]	LFOR-PT [B]	[C]	[D]
Rise in	= 15.0	4.0	0.0	0.0
Span in	= 15.0	4.0	0.0	0.0
No. Barrels	= 1	1	0	0
Invert El. ft	= 69.00	75.00	0.00	0.00
Length ft	= 100.0	1.0	0.0	0.0
Slope %	= 1.00	1.00	0.00	0.00
N-Value	= .013	.013	.000	.000
Orif. Coeff.	= 0.50	0.60	0.00	0.00
Multi-Stage	= -----	Yes	No	No

Weir Structures

	48" RISER [A]	EM. SPLL [B]	[C]	[D]
Crest Len ft	= 12.56	8.00	0.00	0.00
Crest El. ft	= 77.00	78.50	0.00	0.00
Weir Coeff.	= 3.00	3.00	0.00	0.00
Eqn. Exp.	= 1.50	1.50	0.00	0.00
Multi-Stage	= Yes	Yes	No	No

Tailwater Elevation = 0.00 ft

Note: All outflows have been analyzed under inlet and outlet control.

Stage / Storage / Discharge Table

Stage ft	Storage cuft	Elevation ft	Clv A cfs	Clv B cfs	Clv C cfs	Clv D cfs	Wr A cfs	Wr B cfs	Wr C cfs	Wr D cfs	Discharge cfs
0.00	0	75.00	11.41	0.00	---	---	0.00	0.00	---	---	0.00
1.00	7,392	76.00	12.43	0.38	---	---	0.00	0.00	---	---	0.38
2.00	15,787	77.00	13.37	0.57	---	---	0.00	0.00	---	---	0.57
3.00	25,243	78.00	14.25	0.00	---	---	37.68	0.00	---	---	14.25
3.50	30,411	78.50	14.67	0.00	---	---	69.22	0.00	---	---	14.67
5.00	48,006	80.00	15.86	0.00	---	---	195.79	44.09	---	---	15.86

Hydrograph Report

English

Hyd. No. 11

Pond 1 - 10-year storm

Hydrograph type	= Reservoir	Peak discharge	= 11.71 cfs
Storm frequency	= 10 yrs	Time interval	= 10 min
Inflow hyd. No.	= 2	Reservoir name	= BMP
Max. Elevation	= 77.44 ft	Max. Storage	= 19,971 cuft

Storage Indication method used.

Total Volume = 44,340 cuft

Hydrograph Discharge Table

BARREL LOW FLOW ORIF — RISER EM SPILL

Time (hrs)	Inflow cfs	Elevation ft	Clv A cfs	Clv B cfs	Clv C cfs	Clv D cfs	Wr A cfs	Wr B cfs	Wr C cfs	Wr D cfs	Outflow cfs
0.33	6.74	75.64	12.08	0.29	-----	-----	-----	-----	-----	-----	0.29
0.50	22.46 <<	76.70	13.10	0.52	-----	-----	-----	-----	-----	-----	0.52
0.67	12.13	77.44 <<	13.77	0.63	-----	-----	11.14	-----	-----	-----	11.71 <<
0.83	8.76	77.41	13.73	0.63	-----	-----	9.73	-----	-----	-----	10.35
1.00	5.62	77.31	13.65	0.61	-----	-----	6.47	-----	-----	-----	7.08
1.17	4.04	77.23	13.58	0.60	-----	-----	4.32	-----	-----	-----	4.93
1.33	3.37	77.19	13.54	0.60	-----	-----	3.20	-----	-----	-----	3.80
1.50	3.14	77.17	13.53	0.59	-----	-----	2.76	-----	-----	-----	3.35
1.67	2.92	77.16	13.51	0.59	-----	-----	2.49	-----	-----	-----	3.09
1.83	0.00	77.10	13.46	0.58	-----	-----	1.18	-----	-----	-----	1.76
2.00	0.00	77.02	13.39	0.57	-----	-----	0.21	-----	-----	-----	0.79
2.17	0.00	76.97	13.35	0.56	-----	-----	-----	-----	-----	-----	0.56
2.33	0.00	76.93	13.31	0.56	-----	-----	-----	-----	-----	-----	0.56
2.50	0.00	76.89	13.27	0.55	-----	-----	-----	-----	-----	-----	0.55
2.67	0.00	76.85	13.24	0.55	-----	-----	-----	-----	-----	-----	0.55
2.83	0.00	76.81	13.20	0.54	-----	-----	-----	-----	-----	-----	0.54
3.00	0.00	76.78	13.17	0.53	-----	-----	-----	-----	-----	-----	0.53
3.17	0.00	76.74	13.13	0.53	-----	-----	-----	-----	-----	-----	0.53
3.33	0.00	76.70	13.10	0.52	-----	-----	-----	-----	-----	-----	0.52
3.50	0.00	76.66	13.06	0.51	-----	-----	-----	-----	-----	-----	0.51
3.67	0.00	76.63	13.03	0.51	-----	-----	-----	-----	-----	-----	0.51
3.83	0.00	76.59	12.99	0.50	-----	-----	-----	-----	-----	-----	0.50
4.00	0.00	76.56	12.96	0.50	-----	-----	-----	-----	-----	-----	0.50
4.17	0.00	76.52	12.93	0.49	-----	-----	-----	-----	-----	-----	0.49
4.33	0.00	76.49	12.90	0.48	-----	-----	-----	-----	-----	-----	0.48
4.50	0.00	76.45	12.86	0.48	-----	-----	-----	-----	-----	-----	0.48
4.67	0.00	76.42	12.83	0.47	-----	-----	-----	-----	-----	-----	0.47
4.83	0.00	76.38	12.80	0.46	-----	-----	-----	-----	-----	-----	0.46
5.00	0.00	76.35	12.77	0.46	-----	-----	-----	-----	-----	-----	0.46
5.17	0.00	76.32	12.74	0.45	-----	-----	-----	-----	-----	-----	0.45
5.33	0.00	76.29	12.71	0.44	-----	-----	-----	-----	-----	-----	0.44
5.50	0.00	76.26	12.68	0.44	-----	-----	-----	-----	-----	-----	0.44
5.67	0.00	76.22	12.65	0.43	-----	-----	-----	-----	-----	-----	0.43
5.83	0.00	76.19	12.62	0.43	-----	-----	-----	-----	-----	-----	0.43
6.00	0.00	76.16	12.59	0.42	-----	-----	-----	-----	-----	-----	0.42
6.17	0.00	76.13	12.56	0.41	-----	-----	-----	-----	-----	-----	0.41

RISER CREST

BARREL CONTROLS.

Continues on next page...

Hydrograph Discharge Table

Time (hrs)	Inflow cfs	Elevation ft	Clv A cfs	Clv B cfs	Clv C cfs	Clv D cfs	Wr A cfs	Wr B cfs	Wr C cfs	Wr D cfs	Outflow cfs
6.33	0.00	76.10	12.53	0.41	-----	-----	-----	-----	-----	-----	0.41
6.50	0.00	76.08	12.50	0.40	-----	-----	-----	-----	-----	-----	0.40
6.67	0.00	76.05	12.48	0.39	-----	-----	-----	-----	-----	-----	0.39
6.83	0.00	76.02	12.45	0.39	-----	-----	-----	-----	-----	-----	0.39
7.00	0.00	75.99	12.42	0.38	-----	-----	-----	-----	-----	-----	0.38
7.17	0.00	75.96	12.39	0.37	-----	-----	-----	-----	-----	-----	0.37
7.33	0.00	75.93	12.36	0.37	-----	-----	-----	-----	-----	-----	0.37
7.50	0.00	75.90	12.33	0.36	-----	-----	-----	-----	-----	-----	0.36
7.67	0.00	75.87	12.30	0.35	-----	-----	-----	-----	-----	-----	0.35
7.83	0.00	75.84	12.28	0.35	-----	-----	-----	-----	-----	-----	0.35
8.00	0.00	75.82	12.25	0.34	-----	-----	-----	-----	-----	-----	0.34
8.17	0.00	75.79	12.22	0.33	-----	-----	-----	-----	-----	-----	0.33
8.33	0.00	75.76	12.20	0.32	-----	-----	-----	-----	-----	-----	0.32
8.50	0.00	75.74	12.17	0.32	-----	-----	-----	-----	-----	-----	0.32
8.67	0.00	75.71	12.15	0.31	-----	-----	-----	-----	-----	-----	0.31
8.83	0.00	75.69	12.12	0.30	-----	-----	-----	-----	-----	-----	0.30
9.00	0.00	75.66	12.10	0.30	-----	-----	-----	-----	-----	-----	0.30
9.17	0.00	75.64	12.07	0.29	-----	-----	-----	-----	-----	-----	0.29
9.33	0.00	75.61	12.05	0.28	-----	-----	-----	-----	-----	-----	0.28
9.50	0.00	75.59	12.03	0.27	-----	-----	-----	-----	-----	-----	0.27
9.67	0.00	75.57	12.00	0.26	-----	-----	-----	-----	-----	-----	0.26
9.83	0.00	75.55	11.98	0.25	-----	-----	-----	-----	-----	-----	0.25
10.00	0.00	75.53	11.96	0.24	-----	-----	-----	-----	-----	-----	0.24
10.17	0.00	75.51	11.94	0.23	-----	-----	-----	-----	-----	-----	0.23
10.33	0.00	75.49	11.92	0.22	-----	-----	-----	-----	-----	-----	0.22
10.50	0.00	75.47	11.91	0.21	-----	-----	-----	-----	-----	-----	0.21
10.67	0.00	75.46	11.89	0.20	-----	-----	-----	-----	-----	-----	0.20
10.83	0.00	75.44	11.87	0.18	-----	-----	-----	-----	-----	-----	0.18
11.00	0.00	75.43	11.86	0.17	-----	-----	-----	-----	-----	-----	0.17
11.17	0.00	75.41	11.85	0.16	-----	-----	-----	-----	-----	-----	0.16
11.33	0.00	75.40	11.83	0.15	-----	-----	-----	-----	-----	-----	0.15
11.50	0.00	75.39	11.82	0.14	-----	-----	-----	-----	-----	-----	0.14
11.67	0.00	75.38	11.81	0.13	-----	-----	-----	-----	-----	-----	0.13
11.83	0.00	75.37	11.80	0.12	-----	-----	-----	-----	-----	-----	0.12

...End

Reservoir Report

English

Reservoir No. 1 - BMP

Pond Data

Pond storage is based on known contour areas

Stage / Storage Table

Stage ft	Elevation ft	Contour area sqft	Incr. Storage cuft	Total storage cuft
0.00	75.00	6,918	0	0
1.00	76.00	7,865	7,392	7,392
2.00	77.00	8,926	8,396	15,787
3.00	78.00	9,986	9,456	25,243
3.50	78.50	10,684	5,168	30,411
5.00	80.00	12,776	17,595	48,006

Culvert / Orifice Structures

		[A]	[B]	[C]	[D]
Rise in	=	15.0	4.0	0.0	0.0
Span in	=	15.0	4.0	0.0	0.0
No. Barrels	=	1	1	0	0
Invert El. ft	=	69.00	75.00	0.00	0.00
Length ft	=	100.0	1.0	0.0	0.0
Slope %	=	1.00	1.00	0.00	0.00
N-Value	=	.013	.013	.000	.000
Orif. Coeff.	=	0.50	0.60	0.00	0.00
Multi-Stage	=	-----	Yes	No	No

Weir Structures

		[A]	[B]	[C]	[D]
Crest Len ft	=	12.56	8.00	0.00	0.00
Crest El. ft	=	77.00	78.50	0.00	0.00
Weir Coeff.	=	3.00	3.00	0.00	0.00
Eqn. Exp.	=	1.50	1.50	0.00	0.00
Multi-Stage	=	Yes	Yes	No	No

Tailwater Elevation = 0.00 ft

Note: All outflows have been analyzed under inlet and outlet control.

Stage / Storage / Discharge Table

Stage ft	Storage cuft	Elevation ft	Clv A cfs	Clv B cfs	Clv C cfs	Clv D cfs	Wr A cfs	Wr B cfs	Wr C cfs	Wr D cfs	Discharge cfs
0.00	0	75.00	11.41	0.00	---	---	0.00	0.00	---	---	0.00
1.00	7,392	76.00	12.43	0.38	---	---	0.00	0.00	---	---	0.38
2.00	15,787	77.00	13.37	0.57	---	---	0.00	0.00	---	---	0.57
3.00	25,243	78.00	14.25	0.00	---	---	37.68	0.00	---	---	14.25
3.50	30,411	78.50	14.67	0.00	---	---	69.22	0.00	---	---	14.67
5.00	48,006	80.00	15.86	0.00	---	---	195.79	44.09	---	---	15.86

Hydrograph Report

English

Hyd. No. 12

Pond 1 - 25-Year Storm

Hydrograph type	= Reservoir	Peak discharge	= 13.99 cfs
Storm frequency	= 25 yrs	Time interval	= 10 min
Inflow hyd. No.	= 3	Reservoir name	= BMP
Max. Elevation	= 77.69 ft	Max. Storage	= 22,356 cuft

Storage Indication method used.

Total Volume = 50,142 cuft

Hydrograph Discharge Table

Time (hrs)	Inflow cfs	Elevation ft	Clv A cfs	Clv B cfs	Clv C cfs	Clv D cfs	Wr A cfs	Wr B cfs	Wr C cfs	Wr D cfs	Outflow cfs
0.33	7.61	75.73	12.16	0.31	-----	-----	-----	-----	-----	-----	0.31
0.50	25.37 <<	76.91	13.29	0.55	-----	-----	-----	-----	-----	-----	0.55
0.67	13.70	77.69 <<	13.99	-----	-----	-----	21.83	-----	-----	-----	13.99 <<
0.83	9.89	77.56	13.87	0.26	-----	-----	15.81	-----	-----	-----	13.87
1.00	6.34	77.36	13.69	0.62	-----	-----	8.11	-----	-----	-----	8.73
1.17	4.57	77.25	13.60	0.61	-----	-----	4.86	-----	-----	-----	5.47
1.33	3.91	77.21	13.56	0.60	-----	-----	3.70	-----	-----	-----	4.31
1.50	3.55	77.19	13.54	0.60	-----	-----	3.19	-----	-----	-----	3.79
1.67	3.30	77.18	13.53	0.60	-----	-----	2.89	-----	-----	-----	3.49
1.83	0.00	77.11	13.47	0.59	-----	-----	1.39	-----	-----	-----	1.98
2.00	0.00	77.02	13.39	0.57	-----	-----	0.25	-----	-----	-----	0.82
2.17	0.00	76.97	13.35	0.56	-----	-----	-----	-----	-----	-----	0.56
2.33	0.00	76.93	13.31	0.56	-----	-----	-----	-----	-----	-----	0.56
2.50	0.00	76.89	13.27	0.55	-----	-----	-----	-----	-----	-----	0.55
2.67	0.00	76.85	13.24	0.55	-----	-----	-----	-----	-----	-----	0.55
2.83	0.00	76.82	13.20	0.54	-----	-----	-----	-----	-----	-----	0.54
3.00	0.00	76.78	13.17	0.53	-----	-----	-----	-----	-----	-----	0.53
3.17	0.00	76.74	13.13	0.53	-----	-----	-----	-----	-----	-----	0.53
3.33	0.00	76.70	13.10	0.52	-----	-----	-----	-----	-----	-----	0.52
3.50	0.00	76.67	13.06	0.51	-----	-----	-----	-----	-----	-----	0.51
3.67	0.00	76.63	13.03	0.51	-----	-----	-----	-----	-----	-----	0.51
3.83	0.00	76.59	13.00	0.50	-----	-----	-----	-----	-----	-----	0.50
4.00	0.00	76.56	12.96	0.50	-----	-----	-----	-----	-----	-----	0.50
4.17	0.00	76.52	12.93	0.49	-----	-----	-----	-----	-----	-----	0.49
4.33	0.00	76.49	12.90	0.48	-----	-----	-----	-----	-----	-----	0.48
4.50	0.00	76.45	12.87	0.48	-----	-----	-----	-----	-----	-----	0.48
4.67	0.00	76.42	12.83	0.47	-----	-----	-----	-----	-----	-----	0.47
4.83	0.00	76.39	12.80	0.46	-----	-----	-----	-----	-----	-----	0.46
5.00	0.00	76.35	12.77	0.46	-----	-----	-----	-----	-----	-----	0.46
5.17	0.00	76.32	12.74	0.45	-----	-----	-----	-----	-----	-----	0.45
5.33	0.00	76.29	12.71	0.44	-----	-----	-----	-----	-----	-----	0.44
5.50	0.00	76.26	12.68	0.44	-----	-----	-----	-----	-----	-----	0.44
5.67	0.00	76.23	12.65	0.43	-----	-----	-----	-----	-----	-----	0.43
5.83	0.00	76.19	12.62	0.43	-----	-----	-----	-----	-----	-----	0.43
6.00	0.00	76.16	12.59	0.42	-----	-----	-----	-----	-----	-----	0.42
6.17	0.00	76.13	12.56	0.41	-----	-----	-----	-----	-----	-----	0.41

Continues on next page...

Hydrograph Discharge Table

Time (hrs)	Inflow cfs	Elevation ft	Clv A cfs	Clv B cfs	Clv C cfs	Clv D cfs	Wr A cfs	Wr B cfs	Wr C cfs	Wr D cfs	Outflow cfs
6.33	0.00	76.11	12.53	0.41	-----	-----	-----	-----	-----	-----	0.41
6.50	0.00	76.08	12.51	0.40	-----	-----	-----	-----	-----	-----	0.40
6.67	0.00	76.05	12.48	0.39	-----	-----	-----	-----	-----	-----	0.39
6.83	0.00	76.02	12.45	0.39	-----	-----	-----	-----	-----	-----	0.39
7.00	0.00	75.99	12.42	0.38	-----	-----	-----	-----	-----	-----	0.38
7.17	0.00	75.96	12.39	0.37	-----	-----	-----	-----	-----	-----	0.37
7.33	0.00	75.93	12.36	0.37	-----	-----	-----	-----	-----	-----	0.37
7.50	0.00	75.90	12.33	0.36	-----	-----	-----	-----	-----	-----	0.36
7.67	0.00	75.87	12.31	0.35	-----	-----	-----	-----	-----	-----	0.35
7.83	0.00	75.84	12.28	0.35	-----	-----	-----	-----	-----	-----	0.35
8.00	0.00	75.82	12.25	0.34	-----	-----	-----	-----	-----	-----	0.34
8.17	0.00	75.79	12.22	0.33	-----	-----	-----	-----	-----	-----	0.33
8.33	0.00	75.76	12.20	0.32	-----	-----	-----	-----	-----	-----	0.32
8.50	0.00	75.74	12.17	0.32	-----	-----	-----	-----	-----	-----	0.32
8.67	0.00	75.71	12.15	0.31	-----	-----	-----	-----	-----	-----	0.31
8.83	0.00	75.69	12.12	0.30	-----	-----	-----	-----	-----	-----	0.30
9.00	0.00	75.66	12.10	0.30	-----	-----	-----	-----	-----	-----	0.30
9.17	0.00	75.64	12.07	0.29	-----	-----	-----	-----	-----	-----	0.29
9.33	0.00	75.62	12.05	0.28	-----	-----	-----	-----	-----	-----	0.28
9.50	0.00	75.59	12.03	0.27	-----	-----	-----	-----	-----	-----	0.27
9.67	0.00	75.57	12.01	0.26	-----	-----	-----	-----	-----	-----	0.26
9.83	0.00	75.55	11.98	0.25	-----	-----	-----	-----	-----	-----	0.25
10.00	0.00	75.53	11.96	0.24	-----	-----	-----	-----	-----	-----	0.24
10.17	0.00	75.51	11.94	0.24	-----	-----	-----	-----	-----	-----	0.24
10.33	0.00	75.49	11.93	0.22	-----	-----	-----	-----	-----	-----	0.22
10.50	0.00	75.47	11.91	0.21	-----	-----	-----	-----	-----	-----	0.21
10.67	0.00	75.46	11.89	0.20	-----	-----	-----	-----	-----	-----	0.20
10.83	0.00	75.44	11.87	0.18	-----	-----	-----	-----	-----	-----	0.18
11.00	0.00	75.43	11.86	0.17	-----	-----	-----	-----	-----	-----	0.17
11.17	0.00	75.41	11.85	0.16	-----	-----	-----	-----	-----	-----	0.16
11.33	0.00	75.40	11.83	0.15	-----	-----	-----	-----	-----	-----	0.15
11.50	0.00	75.39	11.82	0.14	-----	-----	-----	-----	-----	-----	0.14

...End

Reservoir Report

English

Reservoir No. 1 - BMP

Pond Data

Pond storage is based on known contour areas

Stage / Storage Table

Stage ft	Elevation ft 74?	Contour area sqft	Incr. Storage cuft	Total storage cuft
0.00	75.00	6,918	0	0
1.00	76.00	7,865	7,392	7,392
2.00	77.00	8,926	8,396	15,787
3.00	78.00	9,986	9,456	25,243
3.50	78.50	10,684	5,168	30,411
5.00	80.00 80.6	12,776	17,595	48,006

Culvert / Orifice Structures

	[A]	[B]	[C]	[D]
Rise in	= 15.0	4.0	0.0	0.0
Span in	= 15.0	4.0	0.0	0.0
No. Barrels	= 1	1	0	0
Invert El. ft	= 69.00	75.00	0.00	0.00
Length ft	= 100.0	1.0	0.0	0.0
Slope %	= 1.00	1.00	0.00	0.00
N-Value	= .013	.013	.000	.000
Orif. Coeff.	= 0.50	0.60	0.00	0.00
Multi-Stage	= -----	Yes	No	No

Weir Structures

	[A]	[B]	[C]	[D]
Crest Len ft	= 12.56	8.00	0.00	0.00
Crest El. ft	= 77.00	78.50	0.00	0.00
Weir Coeff.	= 3.00	3.00	0.00	0.00
Eqn. Exp.	= 1.50	1.50	0.00	0.00
Multi-Stage	= Yes	Yes	No	No

Tailwater Elevation = 0.00 ft

Note: All outflows have been analyzed under inlet and outlet control.

Stage / Storage / Discharge Table

Stage ft	Storage cuft	Elevation ft N.P.	Clv A cfs	Clv B cfs	Clv C cfs	Clv D cfs	Wr A cfs	Wr B cfs	Wr C cfs	Wr D cfs	Discharge cfs
0.00	0	75.00	11.41	0.00	---	---	0.00	0.00	---	---	0.00
1.00	7,392	76.00	12.43	0.38	---	---	0.00	0.00	---	---	0.38
2.00	15,787	77.00	13.37	0.57	---	---	0.00	0.00	---	---	0.57
3.00	25,243	78.00	14.25	0.00	---	---	37.68	0.00	---	---	14.25
3.50	30,411	78.50	14.67	0.00	---	---	69.22	0.00	---	---	14.67
5.00	48,006	80.00	15.86	0.00	---	---	195.79	44.09	---	---	15.86

Hydrograph Report

English

Hyd. No. 13

Pond 1- 100-Year Storm

Hydrograph type	= Reservoir	Peak discharge	= 14.30 cfs
Storm frequency	= 100 yrs	Time interval	= 10 min
Inflow hyd. No.	= 4	Reservoir name	= BMP
Max. Elevation	= 78.06 ft	Max. Storage	= 25,840 cuft

Storage Indication method used.

Total Volume = 59,046 cuft

Hydrograph Discharge Table

Time (hrs)	Inflow cfs	Elevation ft	Clv A cfs	Clv B cfs	Clv C cfs	Clv D cfs	Wr A cfs	Wr B cfs	Wr C cfs	Wr D cfs	Outflow cfs
0.33	8.97	75.86	12.29	0.35	-----	-----	-----	-----	-----	-----	0.35
0.50	29.91 <<	77.14	13.50	0.59	-----	-----	2.04	-----	-----	-----	2.63
0.67	16.15	78.06 <<	14.30	-----	-----	-----	41.00	-----	-----	-----	14.30 <<
0.83	11.67	78.04	14.28	-----	-----	-----	39.73	-----	-----	-----	14.28
1.00	7.48	77.75	14.03	-----	-----	-----	24.44	-----	-----	-----	14.03
1.17	5.38	77.39	13.72	0.63	-----	-----	9.35	-----	-----	-----	9.98
1.33	4.49	77.23	13.58	0.60	-----	-----	4.34	-----	-----	-----	4.94
1.50	4.19	77.21	13.56	0.60	-----	-----	3.77	-----	-----	-----	4.37
1.67	3.89	77.20	13.55	0.60	-----	-----	3.46	-----	-----	-----	4.06
1.83	0.00	77.12	13.48	0.59	-----	-----	1.72	-----	-----	-----	2.31
2.00	0.00	77.02	13.39	0.57	-----	-----	0.28	-----	-----	-----	0.86
2.17	0.00	76.98	13.35	0.57	-----	-----	-----	-----	-----	-----	0.57
2.33	0.00	76.94	13.31	0.56	-----	-----	-----	-----	-----	-----	0.56
2.50	0.00	76.90	13.28	0.55	-----	-----	-----	-----	-----	-----	0.55
2.67	0.00	76.86	13.24	0.55	-----	-----	-----	-----	-----	-----	0.55
2.83	0.00	76.82	13.20	0.54	-----	-----	-----	-----	-----	-----	0.54
3.00	0.00	76.78	13.17	0.53	-----	-----	-----	-----	-----	-----	0.53
3.17	0.00	76.74	13.13	0.53	-----	-----	-----	-----	-----	-----	0.53
3.33	0.00	76.70	13.10	0.52	-----	-----	-----	-----	-----	-----	0.52
3.50	0.00	76.67	13.07	0.51	-----	-----	-----	-----	-----	-----	0.51
3.67	0.00	76.63	13.03	0.51	-----	-----	-----	-----	-----	-----	0.51
3.83	0.00	76.59	13.00	0.50	-----	-----	-----	-----	-----	-----	0.50
4.00	0.00	76.56	12.96	0.50	-----	-----	-----	-----	-----	-----	0.50
4.17	0.00	76.52	12.93	0.49	-----	-----	-----	-----	-----	-----	0.49
4.33	0.00	76.49	12.90	0.48	-----	-----	-----	-----	-----	-----	0.48
4.50	0.00	76.45	12.87	0.48	-----	-----	-----	-----	-----	-----	0.48
4.67	0.00	76.42	12.83	0.47	-----	-----	-----	-----	-----	-----	0.47
4.83	0.00	76.39	12.80	0.46	-----	-----	-----	-----	-----	-----	0.46
5.00	0.00	76.35	12.77	0.46	-----	-----	-----	-----	-----	-----	0.46
5.17	0.00	76.32	12.74	0.45	-----	-----	-----	-----	-----	-----	0.45
5.33	0.00	76.29	12.71	0.45	-----	-----	-----	-----	-----	-----	0.45
5.50	0.00	76.26	12.68	0.44	-----	-----	-----	-----	-----	-----	0.44
5.67	0.00	76.23	12.65	0.43	-----	-----	-----	-----	-----	-----	0.43
5.83	0.00	76.20	12.62	0.43	-----	-----	-----	-----	-----	-----	0.43
6.00	0.00	76.17	12.59	0.42	-----	-----	-----	-----	-----	-----	0.42
6.17	0.00	76.14	12.56	0.41	-----	-----	-----	-----	-----	-----	0.41

Continues on next page...

Hydrograph Discharge Table

Time (hrs)	Inflow cfs	Elevation ft	Clv A cfs	Clv B cfs	Clv C cfs	Clv D cfs	Wr A cfs	Wr B cfs	Wr C cfs	Wr D cfs	Outflow cfs
6.33	0.00	76.11	12.54	0.41	-----	-----	-----	-----	-----	-----	0.41
6.50	0.00	76.08	12.51	0.40	-----	-----	-----	-----	-----	-----	0.40
6.67	0.00	76.05	12.48	0.39	-----	-----	-----	-----	-----	-----	0.39
6.83	0.00	76.02	12.45	0.39	-----	-----	-----	-----	-----	-----	0.39
7.00	0.00	75.99	12.42	0.38	-----	-----	-----	-----	-----	-----	0.38
7.17	0.00	75.96	12.39	0.37	-----	-----	-----	-----	-----	-----	0.37
7.33	0.00	75.93	12.37	0.37	-----	-----	-----	-----	-----	-----	0.37
7.50	0.00	75.90	12.34	0.36	-----	-----	-----	-----	-----	-----	0.36
7.67	0.00	75.87	12.31	0.35	-----	-----	-----	-----	-----	-----	0.35
7.83	0.00	75.85	12.28	0.35	-----	-----	-----	-----	-----	-----	0.35
8.00	0.00	75.82	12.25	0.34	-----	-----	-----	-----	-----	-----	0.34
8.17	0.00	75.79	12.23	0.33	-----	-----	-----	-----	-----	-----	0.33
8.33	0.00	75.76	12.20	0.32	-----	-----	-----	-----	-----	-----	0.32
8.50	0.00	75.74	12.17	0.32	-----	-----	-----	-----	-----	-----	0.32
8.67	0.00	75.71	12.15	0.31	-----	-----	-----	-----	-----	-----	0.31
8.83	0.00	75.69	12.12	0.30	-----	-----	-----	-----	-----	-----	0.30
9.00	0.00	75.66	12.10	0.30	-----	-----	-----	-----	-----	-----	0.30
9.17	0.00	75.64	12.07	0.29	-----	-----	-----	-----	-----	-----	0.29
9.33	0.00	75.62	12.05	0.28	-----	-----	-----	-----	-----	-----	0.28
9.50	0.00	75.59	12.03	0.27	-----	-----	-----	-----	-----	-----	0.27
9.67	0.00	75.57	12.01	0.26	-----	-----	-----	-----	-----	-----	0.26
9.83	0.00	75.55	11.99	0.25	-----	-----	-----	-----	-----	-----	0.25
10.00	0.00	75.53	11.97	0.24	-----	-----	-----	-----	-----	-----	0.24
10.17	0.00	75.51	11.95	0.24	-----	-----	-----	-----	-----	-----	0.24
10.33	0.00	75.49	11.93	0.22	-----	-----	-----	-----	-----	-----	0.22
10.50	0.00	75.48	11.91	0.21	-----	-----	-----	-----	-----	-----	0.21
10.67	0.00	75.46	11.89	0.20	-----	-----	-----	-----	-----	-----	0.20
10.83	0.00	75.44	11.88	0.19	-----	-----	-----	-----	-----	-----	0.19
11.00	0.00	75.43	11.86	0.17	-----	-----	-----	-----	-----	-----	0.17
11.17	0.00	75.41	11.85	0.16	-----	-----	-----	-----	-----	-----	0.16
11.33	0.00	75.40	11.83	0.15	-----	-----	-----	-----	-----	-----	0.15

...End

MODIFIED RATIONAL METHOD HYDROGRAPH

Q = CiA * Units Conversion; Where Conversion = 43560 / (12 * 3600)

:

Tag	Freq	File	IDF Curve
Dev..1	1	JCC.IDQ	e = .9050 b = 63.0330 d = 12.2000

Td = .5333 hrs

Tag	Freq (years)	C	C adj factor	C final	I in/hr	Area acres	Peak Q cfs
Dev..1	1	.550	1.000	.550	2.0439	6.900	7.82

HYG file = S:\JOBS\8914\01-IBV\DESIGN\POND-E&S\HAESTAD\IBV-MR.HYG
HYG ID = DRAINAGE AREA
HYG Tag = Dev..1

Peak Discharge = 7.82 cfs
Time to Peak = .1700 hrs
HYG Volume = .345 ac-ft * * = 15,028 CF

HYDROGRAPH ORDINATES (cfs)
Output Time increment = .0100 hrs
Time on left represents time for first value in each row.

Time hrs					
.0000	.00	.46	.92	1.38	1.84
.0500	2.30	2.76	3.22	3.68	4.14
.1000	4.60	5.06	5.52	5.98	6.44
.1500	6.90	7.36	7.82	7.82	7.82
.2000	7.82	7.82	7.82	7.82	7.82
.2500	7.82	7.82	7.82	7.82	7.82
.3000	7.82	7.82	7.82	7.82	7.82
.3500	7.82	7.82	7.82	7.82	7.82
.4000	7.82	7.82	7.82	7.82	7.82
.4500	7.82	7.82	7.82	7.82	7.82
.5000	7.82	7.82	7.82	7.82	7.51
.5500	7.05	6.59	6.13	5.67	5.21
.6000	4.75	4.29	3.83	3.37	2.91

MASTER DESIGN STORM SUMMARY

Default Network Design Storm File, ID JCC.IDQ jcc

i = b / ((T + d)**e)

Where: i = rainfall intensity (in/hr)
T = rainfall duration (min)
e, b, d = rainfall equation coefficients

Return Event	Rainfall Type	e coeff	b coeff	d coeff
Dev..1	I-D-F from e, b, d coeff.	.9050	63.0330	12.2000
Dev..2	I-D-F from e, b, d coeff.	.9070	79.8580	14.0000
Dev.10	I-D-F from e, b, d coeff.	.9430	143.7170	19.2000
Dev.25	I-D-F from e, b, d coeff.	.9420	172.1050	21.2000
Dev100	I-D-F from e, b, d coeff.	.9860	273.9490	26.3000

MASTER NETWORK SUMMARY
Modified Rational Method Network

(*Node=Outfall; +Node=Diversion;)
(Trun= HYG Truncation: Blank=None; L=Left; R=Rt; LR=Left&Rt)

Storage Node ID	Type	Return Event	HYG Vol ac-ft	Trun	Qpeak hrs	Qpeak cfs	Max WSEL ft	Max Pond ac-ft
DRAINAGE AREA	AREA	1	.345		.1700	7.82		
DRAINAGE AREA	AREA	2	.432		.1700	8.96		
DRAINAGE AREA	AREA	10	.646		.1700	11.72		
DRAINAGE AREA	AREA	25	.773		.1700	13.06		
DRAINAGE AREA	AREA	100	.983		.1700	15.19		
*OUTFALL	JCT	1	.340		.6700	.53		
*OUTFALL	JCT	2	.425		.6900	3.14		
*OUTFALL	JCT	10	.639		.7000	9.60		
*OUTFALL	JCT	25	.766		.7400	11.23		
*OUTFALL	JCT	100	.976		.8000	13.21		
POND IN	POND	1	.345		.1700	7.82		
POND IN	POND	2	.432		.1700	8.96		

AES CALCULATIONS

WORKSHEET FOR BMP POINT SYSTEM

TOTAL SITE AREA = 7.75 AC.

A. STRUCTURAL BMP POINT ALLOCATION

BMP	BMP Points		Fraction of Site Served	Weighted BMP Points
Wet Pond (E.D.)	10	x	(6.30+0.59) ÷ 7.75 =	8.89

TOTAL WEIGHTED STRUCTURAL BMP POINTS: 8.89

B. NATURAL OPEN SPACE CREDIT

Adjacent To Wetland	Natural Open Space Credit		Fraction of Site		Points for Natural Open Space
No	10	x	0.94 ÷ 7.75	=	1.21

C. TOTAL WEIGHTED POINTS

Structural BMP Points		Natural Open Space Points		Total
8.89	+	1.21	=	10.10

NOTES:

1) Natural open space has been placed in a conservation easement.

Impervious Area and Required Volume Calculations
for
Ironbound Village
AES# 8914-1

Impervious items	Totals		Acres
Houses	23 Ea	1350 SF	0.71
T.H.	7 Ea	912 SF	0.15
Office	4 Ea	2400 SF	0.22
Drveways	23 Ea	312 SF	0.16
Roads:			
Public	870 LF	31 Width	0.62
Private	530 LF	60 Width	0.73
Pond Access Rd	340 LF	12 Width	0.09
Wet Pond Surface @ N.P.	105 LF	65 Width	0.16
Sidewalks:			
w/in R/W	850 LF	8 Width	0.16
Offsite Road	500 LF	12 Width	0.14
		Total Impervious Area (TIA)	**3.14**

Area to Pond = 6.8 Acres

Percent Impervious = 46%

Pond's Required Wet Volume = (1")(ft/12")(TIA Ac)(43560 sf/Ac) = 11,390 c.f.

Pond's Required Dry Volume = (1")(ft/12")(TIA Ac)(43560 sf/Ac) = 11,390 c.f.

Sediment Forebay's Required Volume = (0.1")(ft/12")(TIA Ac)(43560 sf/Ac) = 1,139 c.f.

STREAM CHANNEL PROTECTION CALCULATIONS
for
Ironbound Village
AES Project No.: 8914-1

PROPOSED POND VOLUME

Eleva	Depth	Area (sq. ft.)	Incremental Volume (cu. ft.)	Sum Volume (cu. ft.)	Sum Volume (cu. yd.)	Volume Above NPE
70.0	0.0	1,094	0	0	0	
72.0	2.0	2,396	3,490	3,490	129	
73.7	1.7	4,303	5,694	9,184	340	
74.0	0.3	5,971	1,541	10,725	397	
75.0	1.0	6,918	6,445	17,170	636	0
76.0	1.0	7,865	7,392	24,561	910	7,391
77.0	1.0	8,926	8,395	32,957	1,221	15,787
78.0	1.0	9,986	9,456	42,412	1,571	25,242
78.5	0.5	10,684	5,168	47,580	1,762	30,410
80.0	1.5	12,776	17,595	65,175	2,414	48,005

RELEASE RATE REQUIRED TO DETAINED VOLUME FOR 24 HOURS

MUST RATIONAL CRITICAL STORM OVR.

Required Volume based upon 1-Year, 24-Hour Storm Hydrograph = 15,028 cubic feet ✓

Volume provided based upon above table = 15,787 cubic feet

Elevation of water surface associated with provided volume = 77.0

Elevation of Low Flow Orifice = 75.0

Average Head, in feet = 1.0

Average Release Rate Calculation $\frac{15{,}787 \text{ cubic feet}}{(24 \text{ hours} \times 60 \text{ minutes/hour} \times 60 \text{ seconds/ minute})}$ = 0.2 cfs

LOW FLOW ORIFICE DIAMETER REQUIRED TO MAINTAIN AVERAGE RELEASE RATE

Diameter of Low Flow Orifice = 2 * (Q / ((64.32 * (h / 2)) ^ (1/2) * 0.6 * 3.14))) ^ (1/2)

where, Q equals average release rate (cfs), h equals average head (feet)

Diameter of Low Flow Orifice = 0.30 feet, or 4 inches

CALEB Hurst
CJ Brown
CAROMATIC

MASTER NETWORK SUMMARY
Modified Rational Method Network

(*Node=Outfall; +Node=Diversion;)
(Trun= HYG Truncation: Blank=None; L=Left; R=Rt; LR=Left&Rt)

Storage Node ID		Type	Return Event	HYG Vol ac-ft	Trun	Qpeak hrs	Qpeak cfs	Max WSEL ft	Max Pond ac-ft
POND	IN	POND	10	.646		.1700	11.72		
POND	IN	POND	25	.773		.1700	13.06		
POND	IN	POND	100	.983		.1700	15.19		
POND	OUT	POND	1	.340		.6700	.53	76.82	.716
POND	OUT	POND	2	.425		.6900	3.14	77.13	.780
POND	OUT	POND	10	.639		.7000	9.60	77.45	.847
POND	OUT	POND	25	.766		.7400	11.23	77.57	.874
POND	OUT	POND	100	.976		.8000	13.21	77.80 OHW	.925

Q_{OUT} ELEV.

File.... S:\JOBS\8914\01-IBV\DESIGN\POND-E&S\HAESTAD\POND.PPW

OUTLET STRUCTURE INPUT DATA

```
Structure ID       = CV
Structure Type     = Culvert-Circular
-----------------------------------
No. Barrels        =         1
Barrel Diameter    =    1.2500 ft
Upstream Invert    =     69.00 ft
Dnstream Invert    =     68.00 ft
Horiz. Length      =    100.00 ft
Barrel Length      =    100.01 ft
Barrel Slope       =    .01000 ft/ft

OUTLET CONTROL DATA...
Mannings n         =     .0130
Ke                 =     .5000  (forward entrance loss)
Kb                 =   .023225  (per ft of full flow)
Kr                 =     .5000  (reverse entrance loss)
HW Convergence     =      .001  +/- ft

INLET CONTROL DATA...
Equation form      =         1
Inlet Control K    =     .0078
Inlet Control M    =    2.0000
Inlet Control c    =    .02920
Inlet Control Y    =     .7400
T1 ratio (HW/D)    =     1.131
T2 ratio (HW/D)    =     1.202
Slope Factor       =     -.500
```

Use unsubmerged inlet control Form 1 equ. below T1 elev.
Use submerged inlet control Form 1 equ. above T2 elev.

In transition zone between unsubmerged and submerged inlet control, interpolate between flows at T1 & T2...
At T1 Elev = 70.41 ft ---> Flow = 4.80 cfs
At T2 Elev = 70.50 ft ---> Flow = 5.49 cfs

```
Structure ID       = TW
Structure Type     = TW SETUP, DS Channel
-----------------------------------
FREE OUTFALL CONDITIONS SPECIFIED

CONVERGENCE TOLERANCES...
Maximum Iterations=    30
Min. TW tolerance =    .01 ft
Max. TW tolerance =    .01 ft
Min. HW tolerance =    .01 ft
Max. HW tolerance =    .01 ft
Min.  Q tolerance =    .10 cfs
Max.  Q tolerance =    .10 cfs
```

OUTLET STRUCTURE INPUT DATA

```
Structure ID       = SW
Structure Type     = Weir-Rectangular
-----------------------------------
# of Openings      =         1
Crest Elev.        =     78.50 ft
Weir Length        =      8.00 ft
Weir Coeff.        =  3.000000

Weir TW effects      (Use adjustment equation)
```

```
Structure ID       = SP
Structure Type     = Stand Pipe
-----------------------------------
# of Openings      =         1
Invert Elev.       =     77.00 ft
Diameter           =    3.0000 ft
Orifice Area       =    7.0686 sq.ft
Orifice Coeff.     =      .600
Weir Length        =      9.42 ft
Weir Coeff.        =     3.000
K, Submerged       =      .000
K, Reverse         =     1.000
Kb,Barrel          =   .000000  (per ft of full flow)
Barrel Length      =       .00 ft
Mannings n         =     .0000
```

```
Structure ID       = OR
Structure Type     = Orifice-Circular
-----------------------------------
# of Openings      =         1
Invert Elev.       =     75.00 ft
Diameter           =     .3300 ft
Orifice Coeff.     =      .600
```

File.... S:\JOBS\8914\01-IBV\DESIGN\POND-E&S\HAESTAD\POND.PPW

REQUESTED POND WS ELEVATIONS:

Min. Elev.= 70.00 ft
Increment = .50 ft
Max. Elev.= 80.00 ft

****
OUTLET CONNECTIVITY
****

---> Forward Flow Only (UpStream to DnStream)
<--- Reverse Flow Only (DnStream to UpStream)
<---> Forward and Reverse Both Allowed

Structure	No.		Outfall	E1, ft	E2, ft
Weir-Rectangular	SW	--->	TW	78.500	80.000
Stand Pipe	SP	--->	CV	77.000	80.000
Orifice-Circular	OR	--->	CV	75.000	80.000
Culvert-Circular	CV	--->	TW	69.000	80.000

TW SETUP, DS Channel

File.... S:\JOBS\8914\01-IBV\DESIGN\POND-E&S\HAESTAD\POND.PPW

***** COMPOSITE OUTFLOW SUMMARY ****

WS Elev, Total Q		Notes		
		Converge		
Elev. ft	Q cfs	TW Elev ft	Error +/-ft	Contributing Structures
70.00	.00	Free Outfall		(no Q: SW,SP,OR,CV)
70.50	.00	Free Outfall		(no Q: SW,SP,OR,CV)
71.00	.00	Free Outfall		(no Q: SW,SP,OR,CV)
71.50	.00	Free Outfall		(no Q: SW,SP,OR,CV)
72.00	.00	Free Outfall		(no Q: SW,SP,OR,CV)
72.50	.00	Free Outfall		(no Q: SW,SP,OR,CV)
73.00	.00	Free Outfall		(no Q: SW,SP,OR,CV)
73.50	.00	Free Outfall		(no Q: SW,SP,OR,CV)
74.00	.00	Free Outfall		(no Q: SW,SP,OR,CV)
74.50	.00	Free Outfall		(no Q: SW,SP,OR,CV)
75.00	.00	Free Outfall		(no Q: SW,SP,OR,CV)
75.50	.24	Free Outfall		OR,CV (no Q: SW,SP)
76.00	.38	Free Outfall		OR,CV (no Q: SW,SP)
76.50	.48	Free Outfall		OR,CV (no Q: SW,SP)
77.00	.56	Free Outfall		OR,CV (no Q: SW,SP)
77.50	10.63	Free Outfall		SP,OR,CV (no Q: SW)
78.00	14.90	Free Outfall		SP,CV (no Q: SW,OR)
78.50	15.32	Free Outfall		SP,CV (no Q: SW,OR)
79.00	24.21	Free Outfall		SW,SP,CV (no Q: OR)
79.50	40.12	Free Outfall		SW,SP,CV (no Q: OR)
80.00	60.60	Free Outfall		SW,SP,CV (no Q: OR)

need
initials for
Release