CERTIFICATE OF AUTHENTICITY

THIS IS TO CERTIFY THAT THE FOLLOWING ELECTRONIC RECORDS ARE TRUE AND ACCURATE REPRODUCTIONS OF THE ORIGINAL RECORDS OF JAMES CITY COUNTY GENERAL SERVICES DEPARTMENT- STORMWATER DIVISION; WERE SCANNED IN THE REGULAR COURSE OF BUSINESS PURSUANT TO GUIDELINES ESTABLISHED BY THE LIBRARY OF VIRGINIA AND ARCHIVES; AND HAVE BEEN VERIFIED IN THE CUSTODY OF THE INDIVIDUAL LISTED BELOW.

BMP NUMBER: **JR020**

DATE VERIFIED: **June 7, 2012**

QUALITY ASSURANCE TECHNICIAN: **Leah Hardenbergh**

Leah Hardenbergh

LOCATION: WILLIAMSBURG, VIRGINIA

Stormwater Division

MEMORANDUM

DATE: March 11, 2010

TO: Michael J. Gillis, Virginia Correctional Enterprises Document Management Services

FROM: Jo Anna Ripley, Stormwater

PO: 270712

RE: Files Approved for Scanning

General File ID or BMP ID: JR020

PIN: 4420900001A

Subdivision, Tract, Business or Owner Name (if known): Governors Land

Property Description: Major Open Space Block B River Reach

Site Address:

(For internal use only) **Box** 16 **Drawer:** 7

Agreements: (in file as of scan date) **N** **Book or Doc#:** **Page:**

Comments

JR-020

Contents for Stormwater Management Facilities As-built Files

Each file is to contain:

1. As-built plan
2. Completed construction certification
3. Construction Plan
4. Design Calculations
5. Watershed Map
6. Maintenance Agreement
7. Correspondence with owners
8. Inspection Records
9. Enforcement Actions

James City County, Virginia
Environmental Division

Stormwater Management/BMP Facilities
Record Drawing/Construction Certification
Review Tracking Form

Pond B

County Plan No.: S-14-93
Project Name: Governors Land
Stormwater Management Facility: Kitchums Pond
Phase: ☒ I ☐ II ☐ III

- ☑ Information Received. Date: Feb 14 2002 AES
- ☐ Administrative Check.
  - ☑ Record Drawing Date: 1/13/02 AES
  - ☒ No Construction Certification Date:
  - ☑ RD/CC Standard Forms (Required after Feb 1st 2001 Only)
  - ☐ No Insp/Maint Agreement Info: Global I/M
  - ☐ NO BMP Maintenance Plan Location:
  - ☐ Other:
- ☑ Standard E&SC Note on Approved Plan Requiring RD/CC or County comment in plan review file. Can't Find
  - ☐ Yes ☒ No Location: None on Plan or File.
- ☑ Assign County BMP ID Code Code: JR 020
- ☑ Log into Division's "As-Built" Tracking Log
- ☑ Add Location to GIS Database Map. Obtain GIS site information (GPIN, Owner, Site Area, Address, etc.)
- ☑ Preliminary Log into BMP Database (BMP ID #, Site Plan #, GPIN, Project Name)
- ☑ Active Project File Review (correspondence, H&H, etc.).
- ☑ Initial As-Built File setup (label, copy hydraulics, BMP information, etc.).
- ☑ Inspector Check of RD/CC. JB
- ☑ Pre-Inspection Drawing Review - Approved Plan (Quick look prior to field inspection).
- ☐ Final Inspection (FI) Performed Date: 1/10/03 RH
- ☑ Record Drawing (RD) Review Date: 1/8/03 RH; 1/24/03 SJT
- ☑ Construction Certification (CC) Review Date: None Rqd.
- ☐ Actions:
  - ☐ No comments.
  - ☐ Comments. Letter Forwarded. Date: 1/24/03
    - ☒ Record Drawing (RD)
    - ☐ Construction Certification (CC)
    - ☒ Construction-Related (CR)
    - ☐ Site Issues (SI)
    - ☐ Other :
- ☐ Second Submission: 5/14/03 AES (RD)
- ☐ Third Submission:
- ☒ Acceptable for stormwater managment facility purposes (RD/CC/CR/Other). Proceed with bond release.
- ☒ Notify Darryl/Joan/Pat of acceptability using email (preferred), form or verbal.
- ☒ Check/Clean active file of any remaining material and finish "As-Built" file.
- ☒ Add to County BMP Inventory/Inspection schedule (Phase I, II or III).
- ☒ Copy Final Inspection Report into County BMP Inspection Program file.
- ☒ Digital Photographs obtained.
- ☐ Add to JCC Hydrology & Hydraulic database (optional).

BMP Certification Information Acceptable

Plan Reviewer: [signature] Date: 6/26/03

AES CONSULTING ENGINEERS
Engineering, Surveying and Planning
5248 Olde Towne Road, Suite 1
WILLIAMSBURG, VIRGINIA 23188

(757) 253-0040
FAX (757) 220-8994

LETTER OF TRANSMITTAL

DATE	JOB NO.
FEBRUARY 14, 2002	7173

ATTENTION: MR. MIKE WOODSON

RE: GOVERNOR'S LAND

TO JAMES CITY COUNTY ENVIRONMENTAL DIVISION

RECEIVED FEB 2002 ENVIRONMENTAL DIVISION

WE ARE SENDING YOU ☒ Attached ☐ Under separate cover via _____ the following items:

☐ Shop drawings ☒ Prints ☐ Plans ☐ Samples ☐ Specifications

☐ Copy of letter ☐ Change order ☐ _____

COPIES	DATE	NO.	DESCRIPTION
1			RECORD DRAWING CERTIFICATION FOR BENNETT'S POND (JR021)
1			EXCERPT FROM GEO-TECHNICAL REPORT ON BENNETT'S POND
2			SETS OF RECORD DRAWINGS FOR BENNETT'S POND (JR020; 5-14-93)
1			RECORD DRAWING CERTIFICATION FOR KITCHUM'S POND
2			SETS OF RECORD DRAWINGS FOR KITCHUM'S POND

THESE ARE TRANSMITTED as checked below:

☐ For approval ☐ Approved as submitted ☐ Resubmit _____ copies for approval

☒ For your use ☐ Approved as noted ☐ Submit _____ copies for distribution

☐ As requested ☐ Returned for corrections ☐ Return _____ corrected prints

☐ For review and comment ☐ _____

☐ FOR BIDS DUE _____ ☐ PRINTS RETURNED AFTER LOAN TO US

REMARKS

MIKE,

THESE SWM/BMP FACILITIES ARE GETTING NEAR TEN YEARS OLD. TO PROVIDE SOME OF THE INFORMATION IN THE CERTIFICATION AND ON THE RECORD DRAWING, WE RESEARCHED OUR FILES, AND AUGMENTED THAT INFORMATION WITH MINIMAL SURVEYING MEASUREMENTS.

COPY TO _____ SIGNED: V. Marc B

If enclosures are not as noted, kindly notify us at once.

James City County, Virginia
Environmental Division

Stormwater Management / BMP Facilities
Record Drawing and Construction Certification Forms

(Note: In accordance with the requirements of the Chesapeake Bay Preservation Ordinance, Chapter 23, Section 23-10(4), BMP's shall be designed and constructed in accordance with the manual entitled James City County Guidelines for Design and Construction of Stormwater Management BMP's. Erosion and sediment control policy and approved plans generally require that at the completion of the project and prior to release of surety, an "as-built" plan prepared by a registered Professional Engineer or Certified Land Surveyor must be provided for the drainage system for the project, including any Best Management Practice (BMP) facilities. In addition, for BMP facilities involving the construction of an impounding structure or dam embankment, certification is required by a Professional Engineer who has inspected the structure during its construction. Currently there are over 20 water quality type BMP's accepted by the County.)

Section 1 - Site Information:

Project Name: GOVERNOR'S LAND AT TWO RIVER, KITCHUM'S POND
Structure/BMP Name: KITCHUM'S POND
Project Location: EAST END OF THE GOVERNOR'S LAND PROJECT
BMP Location: SOUTHEAST OF INTERSECTION OF KITCHUM POND ROAD AND TWO RIVERS ROAD
County Plan No.: 5 - 14 - 93

Project Type:
- ☒ Residential
- ☐ Commercial
- ☐ Institutional
- ☐ Public
- ☐ Other
- ☐ Business
- ☐ Office
- ☐ Industrial
- ☐ Roadway

Tax Map/Parcel No.: 4420500001A
BMP ID Code (if known): JR020
Zoning District:: R-5
Land Use: RESIDENTIAL
Site Area (sf or acres):

Brief Description of Stormwater Management/BMP Facility: FULLY EXCAVATED IMPOUNDMENT SERVING AS AN EXTENDED DETENTION WET POND

Nearest Visible Landmark to SWM/BMP Facility: TWO RIVERS ROAD (LOCATED TO THE NORTH)

Nearest Vertical Ground Control (if known):
- ☒ JCC Geodetic Ground Control
- ☐ USGS
- ☐ Temporary
- ☐ Arbitrary
- ☐ Other

Station Number or Name: 336
Datum or Reference Elevation: 78.20
Control Description: ~~SCA~~
Control Location from Subject Facility: NORTH OF FACILITY APPROXIMATELY 7000 FEET

Section 2 - Stormwater Management / BMP Facility Construction Information:

PreConstruction Meeting Held for Construction of SWM/BMP Facility: ☐ Yes ☐ No ☑ Unknown
Approx. Construction Start Date for SWM/BMP Facility: SUMMER / FALL 1993 (APPROXIMATE)
Facility Monitored by County Representative during Construction: ☐ Yes ☐ No ☑ Unknown
Name of Site Work Contractor Who Constructed Facility: C. L. WALTRIP, INC.
Name of Professional Firm Who Routinely Monitored Construction: UNKNOWN
Date of Completion for SWM/BMP Facility: UNKNOWN
Date of Record Drawing/Construction Certification Submittal: / / 2/12/02

(Note: Record Drawing and Construction Certifications are required within thirty (30) days of the completion of Stormwater Management and/or BMP facility construction. Record Drawings and Construction Certifications must be reviewed and approved by the James City County Environmental Division prior to final inspection, acceptance and bond or surety release.)

Section 3 - Owner / Designer / Contractor Information:

Owner/Developer: *(Note: Site Owner or Applicant responsible for development of the project.)*

Name: GOVERNOR'S LAND ASSOCIATES
Mailing Address: 9701 MILL POND RUN
TOANO VIRGINIA
Business Phone: 234-5000 Fax: 234-5111
Contact Person: JAMES H. BENNETT Title: VICE PRESIDENT - DEVELOPMENT

Design Professional: *(Note: Professional Engineer or Certified Land Surveyor responsible for the design and preparation of plans and specifications for the Stormwater Management / BMP facility.)*

Firm Name: AES CONSULTING ENGINEERS
Mailing Address: 5248 OLDE TOWNE ROAD SUITE 1
WILLIAMSBURG, VIRGINIA 23188
Business Phone: 757-253-0040
Fax: 757-220-8994
Responsible Plan Preparer: MARC BENNETT
Title: PROJECT MANAGER
Plan Name: GOVERNOR'S LAND BAY 5, POD 2
Firm's Project No. 7173
Plan Date: MARCH 1993
Sheet No.'s Applicable to SWM/BMP Facility: 7 / 8 / 14 / / /

BMP Contractor: *(Note: Site Work Contractor directly responsible for construction of the Stormwater Management / BMP facility.)*

Name: C. L. WALTRIP INC.
Mailing Address: 1554 PENNIMAN ROAD
WILLIAMSBURG, VA 23185
Business Phone: 757-253-1883
Fax:
Contact Person: MR. STAN DUKSTRA
Site Foreman/Supervisor: UNKNOWN
Specialty Subcontractors & Purpose (for BMP Construction Only):

Section 4 - Professional Certifications:

Certifying Professionals: *(Note: A Registered Professional Engineer or Certified Land Surveyor is responsible for preparation of a Record Drawing, sometimes referred to as an As-Built plan, for the drainage system for the project including any Stormwater Management/BMP Facilities. A Registered Professional Engineer is responsible for the inspection, monitoring and certification of Stormwater Management / BMP facilities during its construction.)*

Record Drawing and Construction Certifications for Stormwater Management / BMP Facilities

Record Drawing Certification

Firm Name: AES Consulting Engineers
Mailing Address: 5248 Olde Towne Road, Suite 1
Williamsburg, Virginia 23188
Business Phone: 757-253-0040
Fax: 757-220-8994

Name: V. Marc Bennett
Title: Senior Project Manager

Signature: V. Marc Bennett
Date: 2/12/02

To the extent shown on the drawings, I hereby certify to the best of my knowledge and belief that this record drawing represents the actual condition of the Stormwater Management / BMP facility. The facility appears to conform with the provisions of the approved design plan, specifications and stormwater management plan, except as specifically noted.

COMMONWEALTH OF VIRGINIA
VAN MARC BENNETT
No. 26023
PROFESSIONAL ENGINEER

V. Marc Bennett (Seal)

Virginia Registered Professional Engineer
or Certified Land Surveyor

Construction Certification

Firm Name: _____
Mailing Address: _____
_____
Business Phone: _____
Fax: _____

Name: _____
Title: _____

Signature: _____
Date: _____

I hereby certify to the best of my knowledge and belief that this Stormwater Management/BMP facility was monitored and constructed in accordance with the provisions of the approved design plan, specifications and stormwater management plan, except as specifically noted.

_____ (Seal)

Virginia Registered
Professional Engineer

Section 5 - Record Drawing and Construction Certification Requirements and Instructions:

- ☐ PreConstruction Meeting - Provides an opportunity to review SWM / BMP facility construction, maintenance and operation plans and address any questions regarding construction and/or monitoring of the structure. The design engineer, certifying professionals (if different), Owner/Applicant, Contractor and County representative(s) are encouraged to attend the preconstruction meeting. Advanced notice to the Environmental Division is requested. Usually, this requirement can be met simultaneously with Erosion and Sediment Control preconstruction meetings held for the project.

- ☐ A fully completed ***STORMWATER MANAGEMENT / BMP FACILITIES, RECORD DRAWING and CONSTRUCTION CERTIFICATION FORM*** and ***RECORD DRAWING CHECKLIST***. All applicable sections shall be completed in their entirety and certification statements signed and sealed by the registered professional responsible for individual record drawing and/or construction certification.

- ☐ The Record Drawing shall be prepared by a Registered Professional Engineer or Certified Land Surveyor for the drainage system of the project including any Best Management Practices.

- ☐ Construction Certification. Construction of Stormwater Management / BMP facilities which contain impoundments, embankments and related engineered appurtenances including subgrade preparation, compacted soils, structural fills, liners, geosynthetics, filters, seepage controls, cutoffs, toe drains, hydraulic flow control structures, etc. shall be visually observed and monitored by a Registered Professional Engineer or his/her authorized representative. The Engineer must certify that the structure, embankment and associated appurtenances were built in accordance with the approved design plan, specifications and stormwater management plan and standard accepted construction practice and shall submit a written certification and/or drawings to the Environmental Division as required. Soil and compaction test reports, concrete test reports, inspection reports, logs and other required construction material or installation documentation may be required by the Environmental Division to substantiate the certification, if specifically requested. The Engineer shall have the authority and responsibility to make minor changes to the approved plan, in coordination with the assigned County inspector, in order to compensate for unsafe or unusual conditions encountered during construction such as those related to bedrock, soils, groundwater, topography, etc. as long as changes do not adversely affect the integrity of the structure(s). Major changes to the approved design plan or structure must be reviewed and approved by the original design professional and the James City County Environmental Division.

- ☐ Record Drawing and Construction Certifications are required within **thirty (30) days** of the completion of Stormwater Management / BMP facility construction. Submittals must be reviewed and accepted by James City County Environmental Division prior to final inspection, acceptance and bond/surety release.

  Dual Purpose Facilities - Completion of construction also includes an interim stage for Stormwater Management / BMP facilities which serve dual purpose as temporary sediment basins during construction and as permanent stormwater management / BMP facilities following construction, once development and stabilization are substantially complete. For these dual purpose facilities, construction certification is required once the temporary sediment basin phase of construction is complete. Final record drawing and construction certification of additional permanent components is required once permanent facility construction is complete.

  Interim Construction Certification is required for those dual purpose embankment-type facilities that are generally ten (10) feet or greater in dam height (*) and may not be converted, modified or begin function as a permanent SWM / BMP structure for a period generally ranging from six (6) to eighteen (18) months or more from issuance of a Land Disturbance permit for construction.

Interim or final record drawing and construction certifications are not required for temporary sediment basins which are designed and constructed in accordance with current minimum standards and specifications for temporary sediment basins per the Virginia Erosion and Sediment Control Handbook (VESCH); have a temporary service life of less than eighteen (18) months; and will be removed completely once associated disturbed areas are stabilized, unless a distinct hazard to the public's health, safety and welfare is determined by the Environmental Division due to the size or presence of the structure or due to evidence of improper construction.

(*Note: Dam Height as referenced above is generally defined as the vertical distance from the natural bed of the stream or waterway at the downstream toe of the embankment to the top of the embankment structure in accordance with 4VAC50-20-30, Virginia Impoundment Structure Regulations and the Virginia Dam Safety Program.)

❒ Record Drawings shall provide, at a minimum, all information as shown within these requirements and the attached **RECORD DRAWING CHECKLIST** specific to the type of SWM/BMP facility being constructed. Other additional record data may be formally requested by the James City County Environmental Division. *(Note: Refer to the current edition of the James City County Guidelines for Design and Construction of Stormwater Management BMP's manual for a complete list of acceptable BMP's. Currently there are over 20 acceptable water quality type BMP's accepted by the County.)*

❒ Record Drawings shall consist of blue/black line prints and a reproducible (mylar, sepia, diazo, etc.) set of the approved stormwater management plan including applicable plan views, profiles, sections, details, maintenance plans, etc. as related to the subject SWM / BMP facility. The set shall indicate **"RECORD DRAWING "** in large text in the lower right hand corner of each sheet with record elevations, dimensions and data drawn in a clearly annotated format and/or boxed beside design values. Approved design plan values, dimensions and data shall not be removed or erased. Drawing sheet revision blocks shall be modified as required to indicate record drawing status. Elevations to the nearest 0.1' are sufficiently accurate except where higher accuracy is needed to show positive drainage. Certification statements as shown in Section 4 of the Record Drawing and Construction Certification Form, ***or similar forms thereof***, and professional signatures and seals, with dates matching that of the record drawing status in the revision or title block, are also required on all associated record drawing plans, prints or reproducibles.

❒ Submission Requirements. Initial and subsequent submissions for review shall consist of a minimum of one (1) blue/black line set for record drawings and one copy of the construction certification documents with appropriate transmittal. Under certain circumstances, it is understood that the record drawing and construction certification submissions may be performed by different professional firms. Therefore, record drawing submission may be in advance of construction certification or vice versa. Upon approval and prior to release of bond/surety, final submission shall include one (1) reproducible set of the record drawings, one (1) blue/black line set of the record drawings and one (1) copy of the construction certification. Also for current and/or future incorporation into the County BMP database and GIS system, it is requested that the record drawings also be submitted to the Environmental Division on a diskette or CD-ROM in an acceptable electronic file format such as *.dxf, *.dwg, etc. or in a standard scanned and readable format. The electronic file requirement can be discussed and coordinated with Environmental Division staff at the time of final submission.

STORMWATER MANAGEMENT / BMP FACILITIES
RECORD DRAWING CHECKLIST

(Key for Checklist is as follows: XX Acceptable N/A Not Applicable Inc Incomplete)

I. Methods and Presentation: *(Required for all Stormwater Management / BMP facilities.)*

INC 1. All constructed facilities meet approved design plans, unless otherwise shown. Record information or deviations from approved design plan shown in clearly annotated format and/or boxed beside design values.

XX 2. Elevations to the nearest 0.1' unless higher accuracy is needed to show positive drainage.

XX 3. All plan sheets labeled with "RECORD DRAWING" in large text in lower right hand corner (Approved County Plan Number and BMP ID Code can be included if known).

XX 4. All plan sheet revision blocks modified to indicate date and record drawing status.

XX 5. All plan sheets have certification statements and certifying professional's signature and seal.

II. Minimum Standards: *(Required for all Stormwater Management / BMP facilities, as applicable.)*

INC 1. All requirements of Section I (Methods and Presentation) apply to this section.

XX 2. Plan Views: Show general location, arrangement and dimensions. Location and alignment shall generally match approved design plans.

XX 3. Profile or elevations along top or berm of the facility. At a minimum, elevations are required at each end, at intervals not to exceed 50 feet and where low spots may be present. Top of embankment or berm elevations must be no less than design elevation plus any settlement allowances. (NO EMBANKMENT, BMP IS AN EXCAVATED POND)

N/A 4. Top widths, berm widths and embankment side slopes.

INC 5. Show length, width and depth of facility or grading, contours or spot elevations as required to verify permanent pool and design storage volumes were met or were reasonably close to the approved design. Evaluation of as-built grading, contours, spot elevations, or cross-sections, may be necessary by the professional to ensure approved design configurations, depths and volumes were closely maintained. If grading or elevations are significantly different from the approved plan, the Environmental Division shall be contacted immediately to determine whether the variation is acceptable or whether further evidence will be required. Facilities which do not closely resemble approved plan grades, elevations or configurations may require regrading by the Contractor; check volumetric computations; and/or a check hydraulic routing to ensure approved design water surface elevations, discharges or freeboard were closely maintained.

XX 6. Cross-section of the embankment through the principal spillway or outlet barrel. Must extend at least 100 ft. downstream of the pipe outlet or to recorded site property line, whichever is closer. Proper correlation is required between principal spillway (control structure) crest, emergency spillway crest, orifice and weirs and the top of the dam or facility. All elevations and dimensions must reasonably match the design plan or be sequentially relative to each other and the facility must reflect the required design storage volume(s) and/or design depth.

INC 7. Profile or elevations along the entire centerline of the emergency spillway. Emergency spillway may be steeper, but no flatter or narrower than design.

XX 8. Elevation of the principal spillway crest or outlet crest of the structure.

XX 9. Primary control structure (riser) diameter or dimensions, height, type of material and base size. Indicate provisions for access that are present such as steps, ladders, etc.

XX 10. Dimensions, locations and elevations of outlet orifices, weirs, slots and drains.

XX 11. Type and size of anti-vortex and trash rack device. Height, diameter, dimensions, bar spacings (if applicable) and elevations relative to the principal spillway crest. Indicate if lockable hatch is present or not.

INC 12. Type, location, size and number of anti-seep collars or documentation of other methods utilized for seepage control. **May need to obtain this information during construction.**

N/A 13. Top of impervious core embankment, core trench limits and elevation of cut-off trench bottom. **May need to obtain this information during construction.** (EXCAVATED POND)

XX 14. Elevation of the principal spillway barrel (outlet pipe) inlet and outlet invert.

XX 15. Outlet barrel diameter, length, slope, type and thickness class of material and type of flared end sections, headwall or endwall.

INC 16. Outfall protection dimension, type and depth of rock and if underlain filter fabric is present.

INC 17. BMP interior and periphery landscaping zones conform with arrangements and requirements of the approved design plan.

INC 18. Maintenance plan taken from approved design plan transposed onto record drawing set.

N/A 19. Fencing location and type, if applicable to facility.

XX 20. BMP vicinity properly cleaned of stockpiles and construction debris.

XX 21. No visual signs of erosion or channel degradation immediately downstream of facility.

XX 22. Any other information formally requested by the Environmental Division specific to the constructed SWM/BMP facility.

STORMWATER MANAGEMENT / BMP FACILITIES
RECORD DRAWING CHECKLIST

(Key for Checklist is as follows: XX Acceptable N/A Not Applicable Inc Incomplete)

III. Group A - Wet Ponds *(Includes A-1 Small Wet Ponds; A-2 Wet Ponds; A-3 Wet Ext Det Ponds.)*

INC A1. All requirements of Section II, Minimum Standards, apply to Group A facilities.

XX A2. Principal spillway consists of reinforced concrete pipe with O-Ring gaskets for watertight joint construction.

N/A A3. Sediment forebays or pretreatment devices provided at inlets to pond. Generally 4 to 6 ft. deep.

N/A A4. Access for maintenance and equipment is provided to the forebay(s). Access corridors are at least 12 ft. wide, have a maximum slope of 15 percent and are adequately stabilized to withstand heavy equipment or vehicle use.

N/A A5. Adequate fixed vertical sediment depth markers installed in the forebay(s) for future sediment monitoring purposes.

N/A A6. Pond liner (if required) provided. Either clay liners, polyliners, bentonite liners or use of chemical soil additives based on requirements of the approved plan.

N/A A7. Minimum 6 percent slope safety bench extending a minimum of 15 feet outward from normal pool edge and/or an aquatic bench extending a minimum of 10 feet inward from the normal shoreline with a maximum depth of 12 inches below the normal pool elevation, if applicable, per the approved design plans. (Note: Safety benches may be waived if pond side slopes are no steeper than 4H:1V).

INC A8. No trees are present within a zone 15 feet around the embankment toe and 25 feet from the principal spillway structure.

XX A9. Wet permanent pool, typically 3 to 6 feet deep, is provided and maintains level within facility.

XX A10. Low flow orifice has a non-clogging mechanism.

XX A11. A pond drain pipe with valve was provided.

XX A12. Pond side slopes are not steeper than 3H:1V, unless approved plan allowed for steeper slope.

N/A A13. End walls above barrels (outlet pipe) greater than 48 inch in diameter are fenced to prevent a fall hazard.

STORMWATER MANAGEMENT / BMP FACILITIES
RECORD DRAWING CHECKLIST

(Key for Checklist is as follows: XX Acceptable N/A Not Applicable Inc Incomplete)

IV. Group B - Wetlands *(Includes B-1 Shallow Marsh; B-2 Ext Det Shallow Wetlands; B-3 Pond Wetland System and B-4 Pocket Wetland)*

N/A B1. Same requirements as Group A Wet Ponds.

___ B2. Minimum 2:1 length to width flow path provided across the facility.

___ B3. Micropool provided at or around outlet from BMP (generally 3 to 6 ft. deep).

___ B4. Wetland type landscaping provided in accordance with approved plan. Includes correct pondscaping zones, plant species, planting arrangements, wetland beds, etc. Wetland plants include 5 to 7 emergent wetland species. Individual plants at 18 inches on center in clumps.

___ B5. Adequate wetland buffer provided (Typically 25 ft. outward from maximum design water surface elevation and 15 ft. setback to structures).

___ B6. No more than one-half (½) of the wetland surface area is planted.

___ B7. Topsoil or wetland mulch provided to support vigorous growth of wetland plants.

N/A B8. Planting zones staked or flagged in field and locations subsequently established by appropriate field surveying methods for record drawing presentation.

STORMWATER MANAGEMENT / BMP FACILITIES
RECORD DRAWING CHECKLIST

(Key for Checklist is as follows: XX Acceptable N/A Not Applicable Inc Incomplete)

V. Group C - Infiltration Practices *(Includes C-1 Infiltration Trench; C-2 Infiltration Trench; C-3 Infiltration Basin; and C-4 Infiltration Basin)*

N/A C1. All requirements of Section II, Minimum Standards, apply to Group C facilities as applicable.

___ C2. Facility is not located on fill slopes or on natural ground in excess of six (6) percent.

___ C3. Pretreatment devices provided prior to entry into the infiltration facility. Acceptable pretreatment devices include sediment forebays, sediment basins, sediment traps, sump pits or inlets, grass channels, plunge pools or other acceptable measures.

___ C4. Three (3) or more of the following pretreatment devices provided to protect long term integrity of structure: grass channel; grass filter strip; bottom sand layer; upper filter fabric layer; use of washed bank run gravel aggregate.

___ C5. Sides of infiltration practice lined with filter fabric.

___ C6. Facility was not used for erosion and sediment control purposes and sediment was prevented from entering the facility to the greatest extent possible during construction.

___ C7. Stabilization and acceptable vegetative cover established over contributing drainage area prior to conveyance of stormwater to the facility.

___ C8. Minimum one hundred (100) foot separation horizontally from any known water supply well and minimum one hundred (100) foot separation upslope from any building.

___ C9. Minimum twenty-five (25) foot separation down gradient from any structure.

___ C10. Stormwater outfalls provided for overflow associated with larger design storms.

___ C11. No visual signs of erosion or channel degradation immediately downstream of facility.

___ C12. Facility does not currently cause any apparent surface or subsurface water problems to downgrade properties.

___ C13. Observation well provided.

N/A C14. Adequate, direct access provided to the facility for future maintenance, operation and inspection.

STORMWATER MANAGEMENT / BMP FACILITIES
RECORD DRAWING CHECKLIST

(Key for Checklist is as follows: XX Acceptable N/A Not Applicable Inc Incomplete)

VI. Group D - Filtering Systems *(Includes D-1 Bioretention Cells; D-2 Surface Sand Filters; D-3 Underground Sand Filters; D-4 Perimeter Sand Filters; D-5 Organic Filters; and D-6 Pocket Sand Filters)*

N/A D1. All requirements of Section II, Minimum Standards, apply to Group D facilities.

___ D2. Sediment pretreatment devices provided.

___ D3. For D-1 BMPs (Bioretention Cells), pretreatment consisting of a grass filter strip below level spreader (deflector); a gravel diaphragm; and mulch and planting soil layers were provided.

___ D4. For D-1 BMPs (Bioretention Cells), plantings consist of native plant species; vegetation provided was based on zones of hydric tolerances; trees and understory of shrubs and herbaceous materials were provided; woody vegetation is absent from inflow locations; and trees are located around facility perimeter.

___ D5. Facility was not used for erosion and sediment control purposes and sediment was prevented from entering the facility to the greatest extent possible during construction.

___ D6. No visible signs of accumulated silt/sediment were present in the facility following construction or alternately, accumulated silt/sediment was properly removed .

___ D7. Filtering system is off-line from storm drainage conveyance system.

___ D8. Overflow outlet has adequate erosion protection.

___ D9. Deflector, diversion, flow splitter or regulator structure provided to divert the water quality volume to the filtering structure.

___ D10. Minimum four (4) inch perforated underdrain provided in a clean aggregate envelope layer beneath the facility.

___ D11. Minimum fifty (50) foot separation from any slope fifteen (15) percent or greater. Minimum one hundred (100) foot separation horizontally from any known water supply well. Minimum one hundred (100) foot separation upslope and twenty-five (25) foot separation downslope from any building.

___ D12. Stabilization and acceptable vegetative cover established over contributing drainage area prior to conveyance of stormwater to the facility.

___ D13. No visual signs of erosion or channel degradation immediately downstream of facility.

N/A D14. Adequate, direct access provided to the pretreatment area and/or filter bed for future maintenance.

STORMWATER MANAGEMENT / BMP FACILITIES
AS-BUILT PLAN CHECKLIST

(Key for Checklist is as follows: XX Acceptable N/A Not Applicable Inc Incomplete)

VII. Group E - Open Channel Systems *(Includes E-1 Wet Swales (Check Dams); E-2 Dry Swales; and E-3 Biofilters)*

N/A E1. All requirements of Section II, Minimum Standards, apply to Group E facilities as applicable.

___ E2. Open channel system has constructed longitudinal slope of less than four (4) percent.

___ E3. No visual signs of erosion in the open channel system's soil and/or vegetative cover.

___ E4. Open channel side slopes are no steeper than 2H:1V at any location. Preferred channel sideslope is 3H:1V or flatter.

___ E5. No visual signs of ponding are present at any location in the open channel system, except at rock check dam locations for E-1 systems (Wet Swales).

___ E6. For E-2 BMPs (Dry Swales), an underdrain system was provided.

___ E7. Treated timber or rock check dams provided as pretreatment devices for the open channel system.

___ E8. Gravel diaphragm provided in areas where lateral sheet flow from impervious surfaces are directly connected to the open channel system.

___ E9. Grass cover/stabilization in the open channel system appears adaptable to the specific soils and hydric conditions for the site and along the channel system.

___ E10. Open channel system areas with grass covers higher than four (4) to six (6) inches were properly mowed.

___ E11. Facility was not used for erosion and sediment control purposes and sediment was prevented from entering the facility to the greatest extent possible during construction.

___ E12. No visible signs of accumulated silt/sediment were present in the facility following construction or alternately, accumulated silt/sediment was properly removed and no adverse affects to the function of the facility are anticipated.

___ E13. For E-3 BMPs (Biofilters), the bottom width is six (6) feet maximum at any location.

___ E14. For E-3 BMPs (Biofilters), sideslopes are 3H:1V maximum at any location.

___ E15. For E-3 BMPs (Biofilters), the constructed channel slope is less than or equal to three (3) percent at any location.

N/A E16. For E-3 BMPs (Biofilters), the constructed grass channel is approximately equivalent to the constructed roadway length.

STORMWATER MANAGEMENT / BMP FACILITIES
RECORD DRAWING CHECKLIST

(Key for Checklist is as follows: XX Acceptable N/A Not Applicable Inc Incomplete)

VIII. Group F - Extended Dry Detention *(Includes F-1 Timber Walls; and F-2 Dry Extended Detention with Forebay)*

N/A F1. All requirements of Section II, Minimum Standards, apply to Group F facilities.

___ F2. Basin bottom has positive slope and drainage from all basin inflow points to the riser (or outflow) location.

___ F3. Timber wall BMP used in intermittent stream only. (ie. Prohibited in perennial streams.)

___ F4. Forebay provided approximately 20 ft. upstream of the facility. Forebays generally 4 to 6 feet in depth.

___ F5. A reverse slope pipe, vertical stand pipe or mini-barrel and riser was provided to prevent clogging.

___ F6. Principal spillway and outlet barrel provided consisting of reinforced concrete pipe with O-Ring gaskets for watertight joint construction.

___ F7. Mini-barrel and riser, if used, contains a removable trash rack to reduce clogging.

___ F8. Low flow orifice, if used, has a minimum diameter of three (3) inches or two (2) inches if internal orifice control was utilized and a small, cage type external trash rack.

___ F9. Timbers properly reinforced or concrete footing provided if soil conditions were prohibitive.

___ F10. Timber wall cross members extended to a minimum depth of two (2) feet below ground elevation.

___ F11. Protection against erosion and scour from the low flow orifice and weir-flow trajectory provided.

___ F12. Stilling basin or standard outlet protection provided at principal spillway outlet.

___ F13. Adequate, direct access provided to the facility. Access corridor to facility is at least ten (10) feet wide, slope is less than twenty (20) percent and appropriate stabilization provided for equipment and vehicle use. Access extends to forebay, standpipe and timber wall, as applicable.

___ F14. No visual signs of undercutting of timber walls or clogging of the low orifice were present.

___ F15. No visual signs of erosion or channel degradation immediately downstream of facility.

N/A F16. No visible signs of accumulated silt/sediment were present in the facility following construction or alternately, accumulated silt/sediment was properly removed and no adverse affects to the function of the facility are anticipated.

STORMWATER MANAGEMENT / BMP FACILITIES
RECORD DRAWING CHECKLIST

(Key for Checklist is as follows: XX Acceptable N/A Not Applicable Inc Incomplete)

IX. Group G - Open Spaces *(Includes All Open Space Types G-1; G-2; and G-3)*

N/A G1. All requirements of Section II, Minimum Standards, apply to Group G facilities as applicable.

___ G2. Constructed impervious areas appear to conform with locations indicated on the approved plan and appear less than sixty (60) percent impervious in accordance with the requirements of the James City County Chesapeake Bay Preservation Ordinance.

___ G3. Dedicated open space areas are in undisturbed common areas, conservation easements or are protected by other enforceable instruments that ensures perpetual protection.

___ G4. Provisions included to clearly specify how the natural vegetated areas utilized as dedicated open space will be managed and field identified (marked).

___ G5. Adequate protection measures were implemented during construction to protect the defined dedicated open space areas.

N/A G6. Dedicated open space areas were not disturbed during construction (ie. cleared, grubbed or graded).

STORMWATER MANAGEMENT / BMP FACILITIES
RECORD DRAWING CHECKLIST

(Key for Checklist is as follows: XX Acceptable N/A Not Applicable Inc Incomplete)

X. Storm Drainage Systems (Associated with BMP's Only)

(Includes all incidental stormwater drainage conveyance systems associated with SWM/BMP facilities such as onsite or offsite storm drains, open channels, inlets, manholes, junctions, outlet protections, deflectors, etc. These facilities are external to the treatment function of, but are directly associated with drainage to and/or from a constructed SWM/BMP facility. The intent of this portion of the certification is to accurately identify the type and quantity of inflow or outflow points associated with the facility for future reference. The Professional may use his/her own discretion to determine inclusive facilities to meet the intent of this section. As a general rule, storm drainage systems would include incidental facilities to the nearest access structure upslope or downslope from the normal physical limits of the facility or 800 feet of storm drainage conveyance system length, whichever is less.)

VDOT RECORD DRAWINGS OF STORMSEWER SYSTEMS ADJACENT TO BMP ARE AVAILABLE UPON REQUEST.

___ SD1. All requirements of Section II, Minimum Standards, apply to Storm Drainage Systems.

___ SD2. Horizontal location of all pipe and structures relative to the SWM/BMP facility.

___ SD3. Type, top elevation and invert elevation of all access type structures (inlets, manholes, etc.).

___ SD4. Material type, size or diameter, class, invert elevations, lengths and slopes for all pipe segments.

___ SD5. Class, length, width and depth of riprap and outlet protections or dimensions of special energy dissipation structures.

XII. Other Systems

(Includes any non-typical, specialty, manufactured or innovative stormwater management/BMP practices or systems generally accepted for use as or in conjunction with other acceptable stormwater management / BMP practices. Requires evidence of prior satisfactory industry use and prior Environmental Division approval, waiver or exception .)

N/A O1. All requirements of Section II, Minimum Standards, apply to this section.

N/A O2. Certification criteria to be determined on a case-by-case basis by the Environmental Division specific to the proposed SWM/BMP facility.

STORMWATER MANAGEMENT / BMP FACILITIES
RECORD DRAWING CHECKLIST

XIII. References

(The James City County Record Drawing and Construction Certification Forms and Checklists for Stormwater Management / BMP facilities were developed using the following sources and references.)

- ❒ Baltimore County, Maryland Soil Conservation District, As-Built Stormwater Management Pond Checklist.
- ❒ James City County, Virginia, Guidelines for Design and Construction of Stormwater Management BMP's (October 1999).
- ❒ James City County, Virginia, Stormwater Detention/Retention Basin Design Checklist and Erosion and Sediment Control and Stormwater Management Design Plan Checklists.
- ❒ James City County Stormwater Policy Framework, Final Report of the James City County BMP Policy Project, October 1998, The Center for Watershed Protection.
- ❒ Prince Georges County, Maryland, As-Built Requirements Retention or Detention Pond/Basin.
- ❒ Prince William County, Virginia, Stormwater Management Fact Sheet.
- ❒ Stafford County, Virginia, As-Built Plan Checklist.
- ❒ Stormwater Management Design Manual, NRCS Maryland Code No. 378, Pond Standards and Specifications.
- ❒ USEPA/Watershed Management Institute, Stormwater Management Inspection Forms.
- ❒ Virginia Impounding Structure Regulations (Dam Safety), Department of Conservation & Recreation, 1997.
- ❒ Virginia Erosion and Sediment Control Handbook, Third Edition 1992, Virginia Department of Conservation and Recreation, Division of Soil and Water Conservation.
- ❒ Virginia Stormwater Management Handbook, 1999 edition, Virginia Department of Conservation and Recreation, Division of Soil and Water Conservation.

File: Shared\SWMProg\BMP\Certif\RDCC.wpd

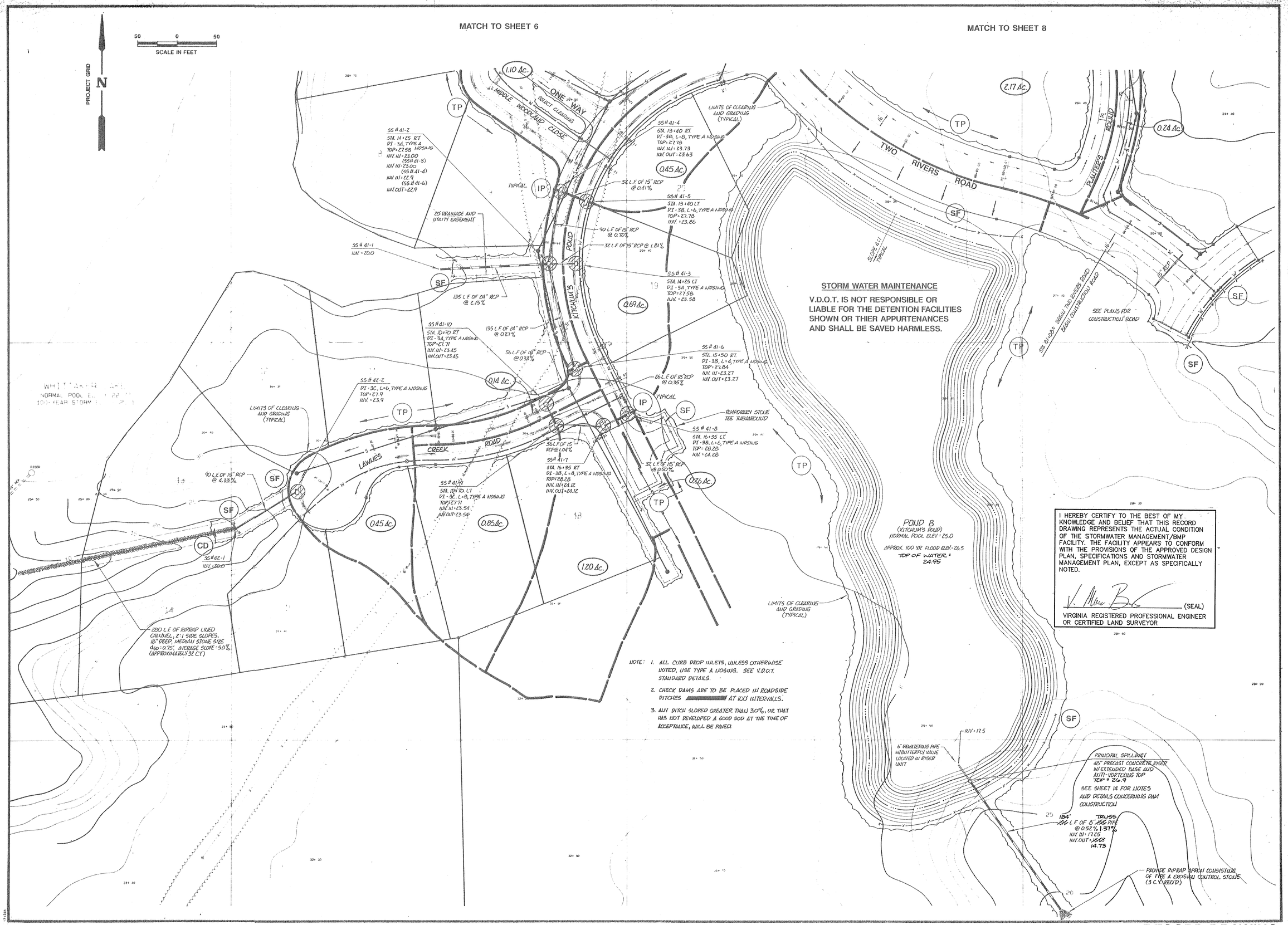

No.	DATE	REVISION / COMMENT / NOTE	BY
2	2/19/97	RECORD DRAWING	
1	3/4/93	REVISED PER ASBUILT REVIEW	VMB

COMMONWEALTH OF VIRGINIA
C. ARCHER MARSTON III
No. 016232
PROFESSIONAL ENGINEER
2-19-97

5248 Olde Towne Road, Suite 1
Williamsburg, Virginia 23188
(804) 253-0040
Fax (804) 220-8994
CONSULTING ENGINEERS

DRAINAGE AND EROSION CONTROL PLAN
HEARTHSTONE, KITCHUM'S POND & PLANTER'S ROUND
THE GOVERNOR'S LAND
At Two Rivers
POWHATAN DISTRICT JAMES CITY COUNTY VIRGINIA

Designed VMB	Drawn
Scale 1"=50'	Date MAR., 1993
Project No. 7173	
Drawing No. 7	

RECORD DRAWING – 2/19/97

JR020_GOVERNORS_LAND_KITCHUMS_POND - 022

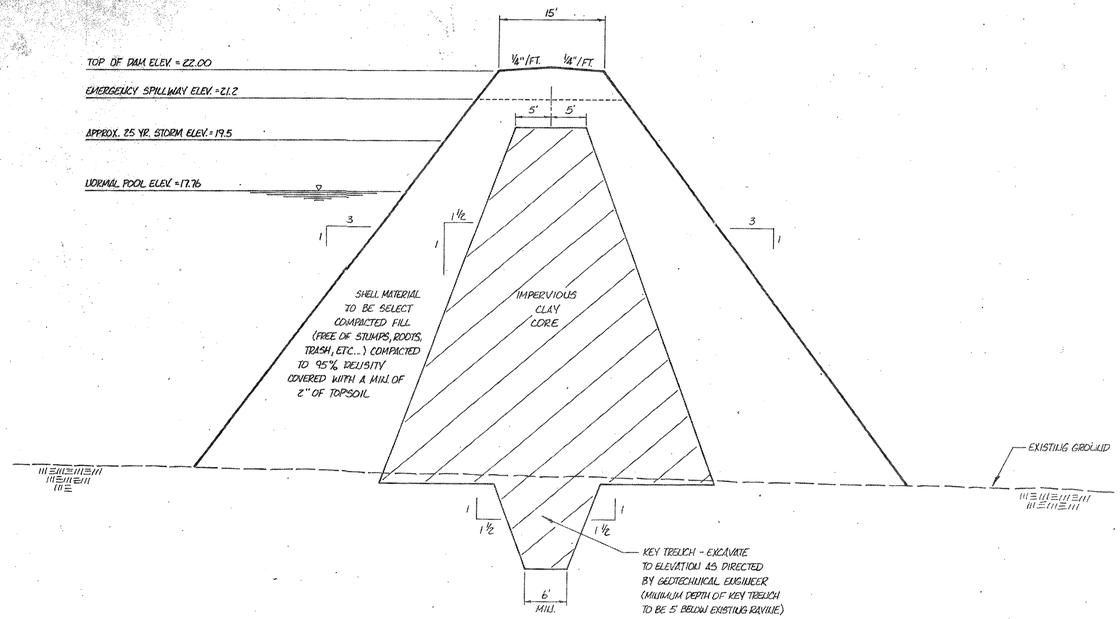

POND A
DAM CROSS-SECTION

SCALE: 1" = 2.5' VERTICAL
1" = 10' HORIZONTAL

NOTES

1. SITE PREPARATION: THE CONTRACTOR SHALL STRIP ALL AREAS OF THE PERMANENT CONSTRUCTION TO REMOVE ALL UNSUITABLE MATERIALS. THE UNSUITABLE MATERIALS TO BE REMOVED BY STRIPPING SHALL INCLUDE ALL TOPSOILS, DEBRIS AND VEGETABLE MATTER, INCLUDING STUMPS AND ROOTS, AND ALL OTHER MATERIALS WHICH MAY BE UNSUITABLE FOR USE IN THE PERMANENT CONSTRUCTION.

2. DAM EMBANKMENT: THE FILL MATERIAL SHALL BE TAKEN FROM APPROVED BORROW AREAS. IT SHALL BE CLEAN MINERAL SOIL, FREE OF ROOTS, WOODY VEGETATION, OVERSIZED STONES, ROCKS, OR OTHER OBJECTIONABLE MATERIAL. SOILS WHICH ARE APPROVABLE FOR THE CONSTRUCTION OF THE IMPERVIOUS CLAY CORE, AS DEFINED BY THE UNIFIED SOIL CLASSIFICATION SYSTEM, ARE CH, INORGANIC CLAYS OF HIGH PLASTICITY; CL, INORGANIC CLAYS OF LOW TO MEDIUM PLASTICITY. IMPERVIOUS CORE MATERIALS SHALL HAVE A COEFFICIENT OR PERMEABILITY (k-VALUE) LESS THAN 10^{-5} CM/SEC. MATERIALS TO BE USED FOR THE CONSTRUCTION OF THE SHELL SHALL BE SELECT BACKFILL FREE OF STUMPS, ROOTS, ROCKS, TRASH, ETC. AND SHALL CONTAIN A MINIMUM OF 15%, BUT NO MORE THAN 49%, PASSING THE NO. 200 SIEVE (SILT AND CLAY). AS DEFINED BY THE UNIFIED SOIL CLASSIFICATION SYSTEM, THE SOILS SHALL BE SM OR SC, SILTY SANDS, SILTY GRAVELLY SANDS, CLAYEY SANDS, OR CLAYEY GRAVELLY SANDS. AREAS ON WHICH FILL IS TO BE PLACED SHALL BE SCARIFIED PRIOR TO PLACEMENT OF FILL. THE FILL MATERIAL'S MOISTURE CONTENT SHALL BE +3 TO -2 PERCENTAGE POINTS OF OPTIMUM MOISTURE CONTENT AS DETERMINED BY ASTM D698 (I.E. IN GENERAL THE FILL MATERIAL SHOULD CONTAIN SUFFICIENT MOISTURE SO THAT IT CAN BE FORMED INTO A BALL WITHOUT CRUMBLING. IF WATER CAN BE SQUEEZED OUT OF THE BALL, IT IS TOO WET FOR PROPER COMPACTION). FILL MATERIAL WILL BE PLACED IN 6 TO 8-INCH CONTINUOUS LAYERS OVER THE ENTIRE LENGTH OF THE FILL. COMPACTION, AS NOTED ON PLAN, SHALL BE OBTAINED GENERALLY BY USING A SHEEPSFOOT COMPACTOR.

3. CUTOFF TRENCH/KEY TRENCH: THE TRENCH SHALL BE EXCAVATED ALONG THE CENTERLINE OF THE DAM. THE MINIMUM DEPTH SHALL BE AS DIRECTED BY THE GEOTECHNICAL ENGINEER AND SHALL EXTEND UP BOTH ABUTMENTS. THE MINIMUM BOTTOM WIDTH SHALL BE 6 FEET, BUT WIDE ENOUGH TO PERMIT OPERATION OF COMPACTION EQUIPMENT. THE SIDE SLOPES SHALL BE NO STEEPER THAN 1-1/2:1. COMPACTION REQUIREMENTS SHALL BE THE SAME AS THOSE FOR THE EMBANKMENT. THE TRENCH SHALL BE KEPT DRAINED DURING THE BACKFILLING-COMPACTING OPERATIONS.

4. EMERGENCY SPILLWAY: DESIGN ELEVATIONS, WIDTHS, ENTRANCE AND EXIT CHANNEL SLOPES ARE CRITICAL TO THE SUCCESSFUL OPERATION OF THE SPILLWAY AND SHOULD BE ADHERED TO CLOSELY DURING CONSTRUCTION.

5. VEGETATIVE STABILIZATION: FINAL VEGETATIVE COVER (STABILIZATION) SHALL CONSIST OF TOPSOILING, LIMING, FERTILIZING, SEEDING, AND MULCHING TO ASSURE A FIRM STAND OF GRASS AS SOON AS PRACTICAL. SEDIMENT BASINS AND OTHER TEMPORARY EROSION CONTROL MEASURES ARE TO BE REMOVED ONLY WHEN STABILIZATION IS COMPLETE. FINAL VEGETAL COVER SHALL BE PROVIDED IN ACCORDANCE WITH THE FOLLOWING:

TOPSOIL: AT LEAST 2" THICKNESS OBTAINED FROM STOCKPILES ON SITE, FREE OF LARGE DEBRIS.
LIME: 4,000#/ACRE (90#/1,000 S.F.)
SEED: SEE SPECIFICATIONS
FERTILIZER: 10/20/10 MIX, 1,000#/ACRE (25#/1,000 S.F.)
MULCH: STRAW OR HAY (LOCALLY OBTAINED) 4,000#/ACRE (90#/1,000 S.F.)

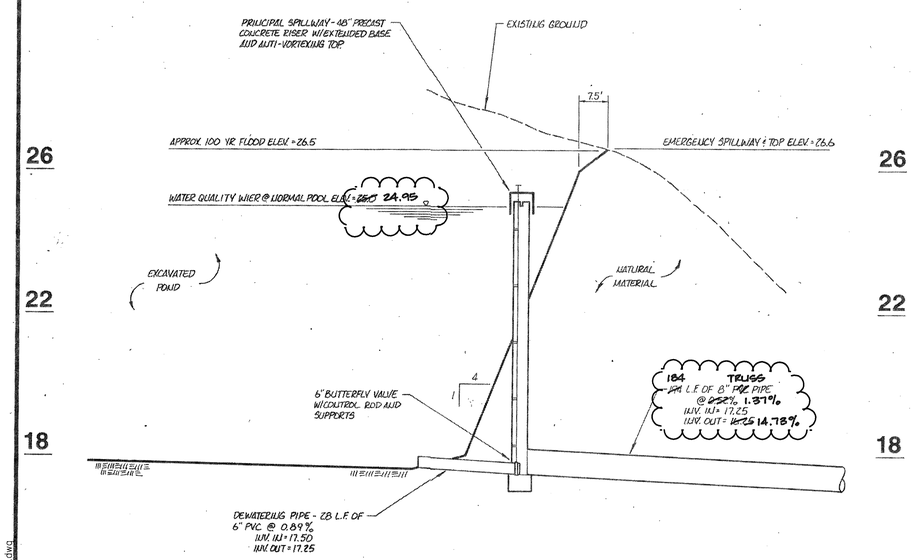

POND B
SECTION @ PRINCIPAL SPILLWAY

SCALE: 1" = 2' VERTICAL
1" = 20' HORIZONTAL

STAND-PIPE ID	CAP ID	CAP WEIGHT	LINTELS $\frac{5}{8}"\times\frac{7}{8}"$	LINTELS $7\frac{3}{4}"\times\frac{5}{8}"$
24"	42"	1.115#	2'-8"	-
27"	48"	1.510#	3'-0"	-
30"	48"	1.510#	3'-4"	-
36"	60"	2.487#	4'-0"	-
42"	66"	2.965#	4'-4"	-
48"	78"	4.044#	4'-8"	-
54"	90"	4.844#	-	5'-4"
60"	96"	5.689#	-	5'-8"
66"	108"	7.150#	-	6'-0"
72"	114"	7.497#	-	6'-4"

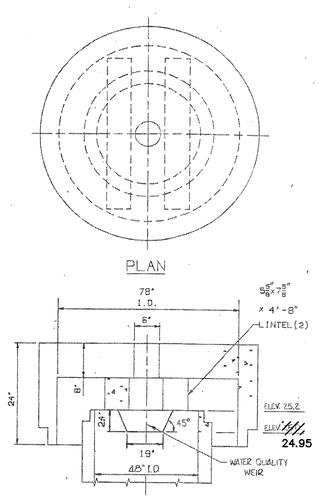

NOTE: CONTRACTOR TO POSITION LINTELS SO AS NOT TO INTERFERE WITH PROPER FUNCTIONING OF WATER QUALITY WEIR, AND FOR PROPER SUPPORT OF ANTI-VORTEXING TOP.

ANTI-VORTEXING TOP

NOT TO SCALE

I HEREBY CERTIFY TO THE BEST OF MY KNOWLEDGE AND BELIEF THAT THIS RECORD DRAWING REPRESENTS THE ACTUAL CONDITION OF THE STORMWATER MANAGEMENT/BMP FACILITY. THE FACILITY APPEARS TO CONFORM WITH THE PROVISIONS OF THE APPROVED DESIGN PLAN, SPECIFICATIONS AND STORMWATER MANAGEMENT PLAN, EXCEPT AS SPECIFICALLY NOTED.

V. Michael Burks P.E. 2/13/02 (SEAL)

VIRGINIA REGISTERED PROFESSIONAL ENGINEER OR CERTIFIED LAND SURVEYOR

APPROVED
James City County
Environmental Division
By: [illegible]
Date: 6/26/02

RECORD DRAWING - 1/13/02

No.	DATE	REVISION / COMMENT / NOTE	BY
2	2/02	RECORD DRAWING FOR SWM / BMP	VMB
1	5/01/95	REVISED PER AGENCY REVIEW	VMB

5248 Olde Towne Road, Suite 1
Williamsburg, Virginia 23188
(804) 253-0040
Fax (804) 220-8994
CONSULTING ENGINEERS

DAM SECTIONS AND DETAILS
HEARTHSTONE, KITCHUM'S POND & PLANTER'S ROUND
THE GOVERNOR'S LAND
POWHATAN DISTRICT JAMES CITY COUNTY VIRGINIA

Designed VMB	Drawn
Scale	Date MAR.,1993
Project No. 7173	
Drawing No. 14	

02.26.02-09:24 7173SR14.dwg

JR020_GOVERNORS_LAND_KITCHUMS_POND - 023

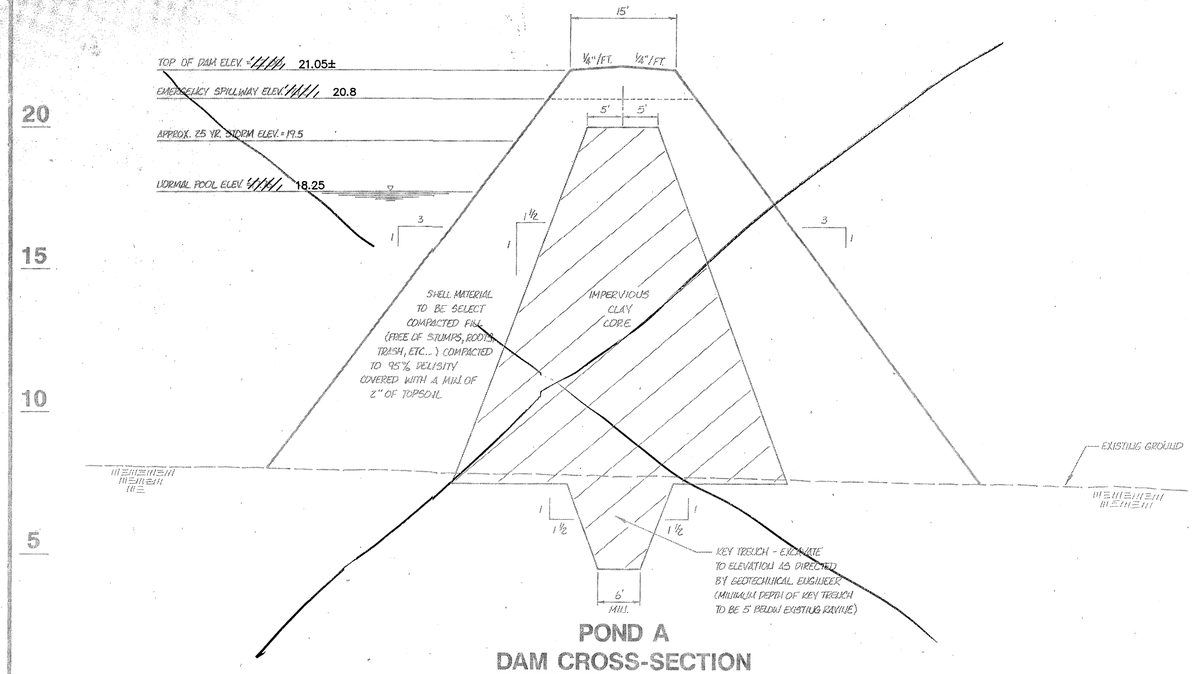

POND A
DAM CROSS-SECTION

SCALE: 1" = 2.5' VERTICAL
1" = 10' HORIZONTAL

NOTES

1. SITE PREPARATION: THE CONTRACTOR SHALL STRIP ALL AREAS OF THE PERMANENT CONSTRUCTION TO REMOVE ALL UNSUITABLE MATERIALS. THE UNSUITABLE MATERIALS TO BE REMOVED BY STRIPPING SHALL INCLUDE ALL TOPSOILS, DEBRIS AND VEGETABLE MATTER, INCLUDING STUMPS AND ROOTS, AND ALL OTHER MATERIALS WHICH MAY BE UNSUITABLE FOR USE IN THE PERMANENT CONSTRUCTION.

2. DAM EMBANKMENT: THE FILL MATERIAL SHALL BE TAKEN FROM APPROVED BORROW AREAS. IT SHALL BE CLEAN MINERAL SOIL, FREE OF ROOTS, WOODY VEGETATION, OVERSIZED STONES, ROCKS, OR OTHER OBJECTIONABLE MATERIAL. SOILS WHICH ARE APPROVABLE FOR THE CONSTRUCTION OF THE IMPERVIOUS CLAY CORE, AS DEFINED BY THE UNIFIED SOIL CLASSIFICATION SYSTEM, ARE CH, INORGANIC CLAYS OF HIGH PLASTICITY; CL, INORGANIC CLAYS OF LOW TO MEDIUM PLASTICITY. IMPERVIOUS CORE MATERIALS SHALL HAVE A COEFFICIENT OR PERMEABILITY (k-VALUE) LESS THAN 10^{-5} CM/SEC. MATERIALS TO BE USED FOR THE CONSTRUCTION OF THE SHELL SHALL BE SELECT BACKFILL FREE OF STUMPS, ROOTS, ROCKS, TRASH, ETC. AND SHALL CONTAIN A MINIMUM OF 15%, BUT NO MORE THAN 49%, PASSING THE NO. 200 SIEVE (SILT AND CLAY). AS DEFINED BY THE UNIFIED SOIL CLASSIFICATION SYSTEM, THE SOILS SHALL BE SM OR SC, SILTY SANDS, SILTY GRAVELLY SANDS, CLAYEY SANDS, OR CLAYEY GRAVELLY SANDS. AREAS ON WHICH FILL IS TO BE PLACED SHALL BE SCARIFIED PRIOR TO PLACEMENT OF FILL. THE FILL MATERIAL'S MOISTURE CONTENT SHALL BE +3 TO -2 PERCENTAGE POINTS OF OPTIMUM MOISTURE CONTENT AS DETERMINED BY ASTM D698 (I.E. IN GENERAL THE FILL MATERIAL SHOULD CONTAIN SUFFICIENT MOISTURE SO THAT IT CAN BE FORMED INTO A BALL WITHOUT CRUMBLING. IF WATER CAN BE SQUEEZED OUT OF THE BALL, IT IS TOO WET FOR PROPER COMPACTION). FILL MATERIAL WILL BE PLACED IN 6 TO 8-INCH CONTINUOUS LAYERS OVER THE ENTIRE LENGTH OF THE FILL. COMPACTION, AS NOTED ON PLAN, SHALL BE OBTAINED GENERALLY BY USING A SHEEPSFOOT COMPACTOR.

3. CUTOFF TRENCH/KEY TRENCH: THE TRENCH SHALL BE EXCAVATED ALONG THE CENTERLINE OF THE DAM. THE MINIMUM DEPTH SHALL BE AS DIRECTED BY THE GEOTECHNICAL ENGINEER AND SHALL EXTEND UP BOTH ABUTMENTS. THE MINIMUM BOTTOM WIDTH SHALL BE 6 FEET, BUT WIDE ENOUGH TO PERMIT OPERATION OF COMPACTION EQUIPMENT. THE SIDE SLOPES SHALL BE NO STEEPER THAN 1-1/2:1. COMPACTION REQUIREMENTS SHALL BE THE SAME AS THOSE FOR THE EMBANKMENT. THE TRENCH SHALL BE KEPT DRAINED DURING THE BACKFILLING-COMPACTING OPERATIONS.

4. EMERGENCY SPILLWAY: DESIGN ELEVATIONS, WIDTHS, ENTRANCE AND EXIT CHANNEL SLOPES ARE CRITICAL TO THE SUCCESSFUL OPERATION OF THE SPILLWAY AND SHOULD BE ADHERED TO CLOSELY DURING CONSTRUCTION.

5. VEGETATIVE STABILIZATION: FINAL VEGETATIVE COVER (STABILIZATION) SHALL CONSIST OF TOPSOILING, LIMING, FERTILIZING, SEEDING, AND MULCHING TO ASSURE A FIRM STAND OF GRASS AS SOON AS PRACTICAL. SEDIMENT BASINS AND OTHER TEMPORARY EROSION CONTROL MEASURES ARE TO BE REMOVED ONLY WHEN STABILIZATION IS COMPLETE. FINAL VEGETAL COVER SHALL BE PROVIDED IN ACCORDANCE WITH THE FOLLOWING:

TOPSOIL: AT LEAST 2" THICKNESS OBTAINED FROM STOCKPILES ON SITE, FREE OF LARGE DEBRIS.
LIME: 4,000#/ACRE (90#/1,000 S.F.)
SEED: SEE SPECIFICATIONS
FERTILIZER: 10/20/10 MIX, 1,000#/ACRE (25#/1,000 S.F.)
MULCH: STRAW OR HAY (LOCALLY OBTAINED) 4,000#/ACRE (90#/1,000 S.F.)

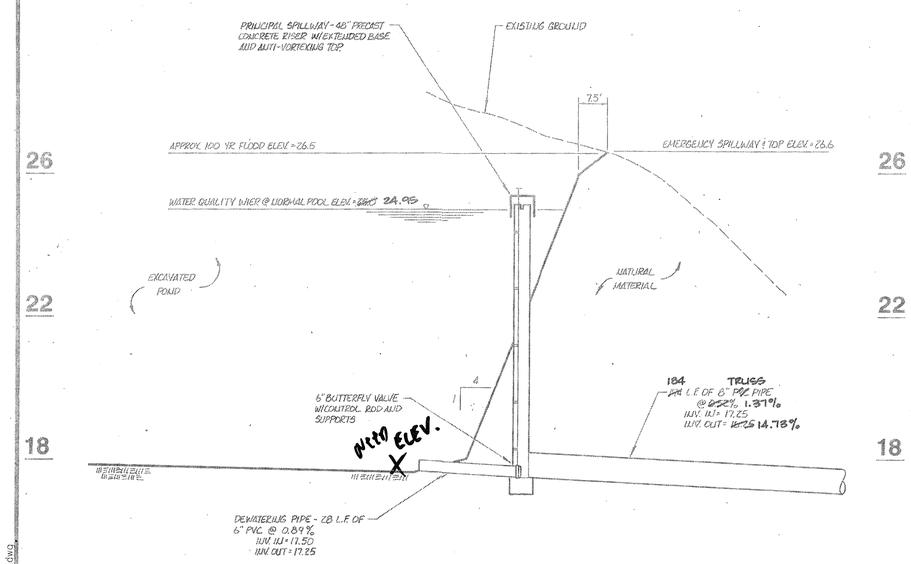

POND B
SECTION @ PRINCIPAL SPILLWAY

SCALE: 1" = 2' VERTICAL
1" = 20' HORIZONTAL

Kitchums POND

STANDARD PIPE ID	CAP ID	CAP WEIGHT	LINTELS $5\frac{1}{2}"\times7\frac{3}{4}"$	LINTELS $7\frac{3}{4}"\times7\frac{3}{4}"$
24"	42"	1.115t	2'-8"	-
27"	48"	1.510t	3'-0"	-
30"	48"	1.510t	3'-4"	-
36"	60"	2.487t	4'-0"	-
42"	66"	2.965t	4'-4"	-
48"	78"	4.044t	4'-8"	-
54"	90"	4.844t	-	5'-4"
60"	96"	5.689t	-	5'-8"
66"	108"	7.150t	-	6'-0"
72"	114"	7.497t	-	6'-4"

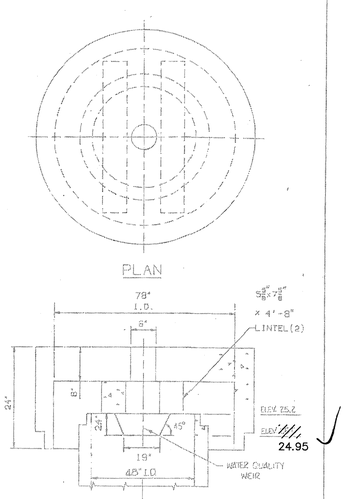

NOTE: CONTRACTOR TO POSITION LINTELS SO AS NOT TO INTERFERE WITH PROPER FUNCTIONING OF WATER QUALITY WEIR, AND FOR PROPER SUPPORT OF ANTI-VORTEXING TOP

ANTI-VORTEXING TOP
NOT TO SCALE

I HEREBY CERTIFY TO THE BEST OF MY KNOWLEDGE AND BELIEF THAT THIS RECORD DRAWING REPRESENTS THE ACTUAL CONDITION OF THE STORMWATER MANAGEMENT/BMP FACILITY. THE FACILITY APPEARS TO CONFORM WITH THE PROVISIONS OF THE APPROVED DESIGN PLAN, SPECIFICATIONS AND STORMWATER MANAGEMENT PLAN, EXCEPT AS SPECIFICALLY NOTED.

(SEAL)
VIRGINIA REGISTERED PROFESSIONAL ENGINEER OR CERTIFIED LAND SURVEYOR

RECORD DRAWING - 1/13/02

No.	DATE	REVISION / COMMENT NOTE	BY
2	2/02	RECORD DRAWING FOR SWM / BMP	VMB
1	6/01	REVISED PER AGENCY REVIEW	VMB

5248 Olde Towne Road, Suite 1
Williamsburg, Virginia 23188
(804) 253-0040
Fax (804) 220-8994
CONSULTING ENGINEERS

DAM SECTIONS AND DETAILS
HEARTHSTONE, KITCHUM'S POND & PLANTER'S ROUND
THE GOVERNOR'S LAND
STORMWATER DISTRICT, JAMES CITY COUNTY, VIRGINIA

Designed VMB	Drawn
Scale	Date MAR., 1993
Project No. 7173	
Drawing No. 14	

02.12.02-16:06 717352R14.dwg

JR020_GOVERNORS_LAND_KITCHUMS_POND - 024

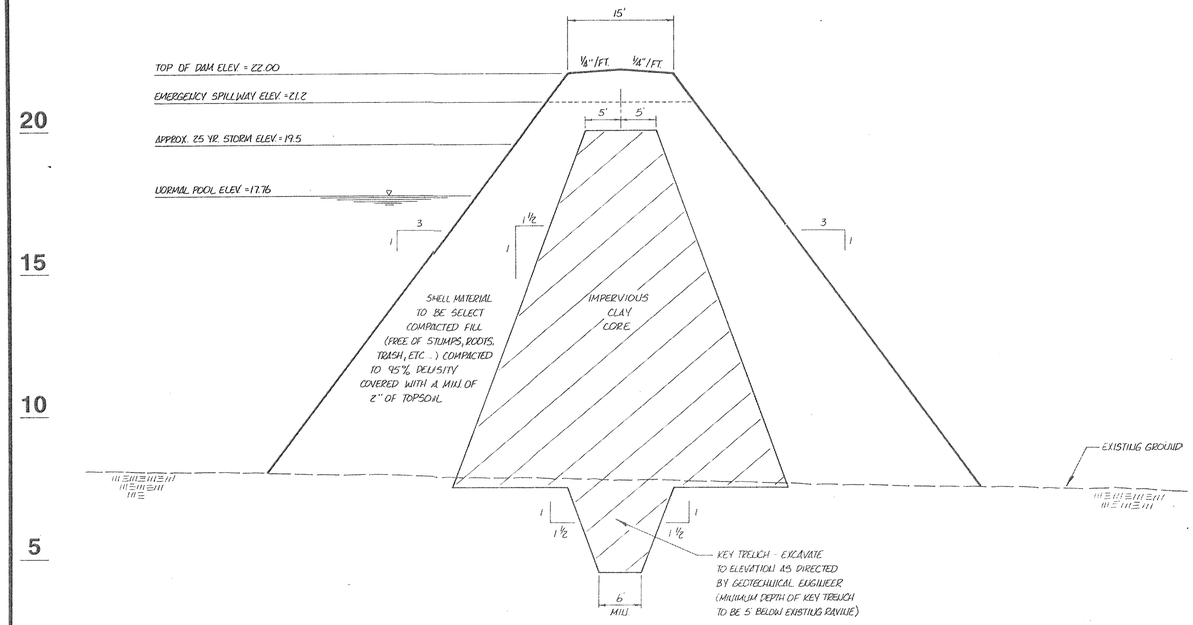

POND A
DAM CROSS-SECTION

SCALE: 1" = 2.5' VERTICAL
1" = 10' HORIZONTAL

NOTES

1. SITE PREPARATION: THE CONTRACTOR SHALL STRIP ALL AREAS OF THE PERMANENT CONSTRUCTION TO REMOVE ALL UNSUITABLE MATERIALS. THE UNSUITABLE MATERIALS TO BE REMOVED BY STRIPPING SHALL INCLUDE ALL TOPSOILS, DEBRIS AND VEGETABLE MATTER, INCLUDING STUMPS AND ROOTS, AND ALL OTHER MATERIALS WHICH MAY BE UNSUITABLE FOR USE IN THE PERMANENT CONSTRUCTION.

2. DAM EMBANKMENT: THE FILL MATERIAL SHALL BE TAKEN FROM APPROVED BORROW AREAS. IT SHALL BE CLEAN MINERAL SOIL, FREE OF ROOTS, WOODY VEGETATION, OVERSIZED STONES, ROCKS, OR OTHER OBJECTIONABLE MATERIAL. SOILS WHICH ARE APPROVABLE FOR THE CONSTRUCTION OF THE IMPERVIOUS CLAY CORE, AS DEFINED BY THE UNIFIED SOIL CLASSIFICATION SYSTEM, ARE CH, INORGANIC CLAYS OF HIGH PLASTICITY; CL, INORGANIC CLAYS OF LOW TO MEDIUM PLASTICITY. IMPERVIOUS CORE MATERIALS SHALL HAVE A COEFFICIENT OR PERMEABILITY (k-VALUE) LESS THAN 10^{-} CM/SEC. MATERIALS TO BE USED FOR THE CONSTRUCTION OF THE SHELL SHALL BE SELECT BACKFILL FREE OF STUMPS, ROOTS, ROCKS, TRASH, ETC. AND SHALL CONTAIN A MINIMUM OF 15%, BUT NO MORE THAN 49%, PASSING THE NO. 200 SIEVE (SILT AND CLAY). AS DEFINED BY THE UNIFIED SOIL CLASSIFICATION SYSTEM, THE SOILS SHALL BE SM OR SC, SILTY SANDS, SILTY GRAVELLY SANDS, CLAYEY SANDS, OR CLAYEY GRAVELLY SANDS. AREAS ON WHICH FILL IS TO BE PLACED SHALL BE SCARIFIED PRIOR TO PLACEMENT OF FILL. THE FILL MATERIAL'S MOISTURE CONTENT SHALL BE +3 TO -2 PERCENTAGE POINTS OF OPTIMUM MOISTURE CONTENT AS DETERMINED BY ASTM D698 (I.E. IN GENERAL THE FILL MATERIAL SHOULD CONTAIN SUFFICIENT MOISTURE SO THAT IT CAN BE FORMED INTO A BALL WITHOUT CRUMBLING. IF WATER CAN BE SQUEEZED OUT OF THE BALL, IT IS TOO WET FOR PROPER COMPACTION). FILL MATERIAL WILL BE PLACED IN 6 TO 8-INCH CONTINUOUS LAYERS OVER THE ENTIRE LENGTH OF THE FILL. COMPACTION, AS NOTED ON PLAN, SHALL BE OBTAINED GENERALLY BY USING A SHEEPSFOOT COMPACTOR.

3. CUTOFF TRENCH/KEY TRENCH: THE TRENCH SHALL BE EXCAVATED ALONG THE CENTERLINE OF THE DAM. THE MINIMUM DEPTH SHALL BE AS DIRECTED BY THE GEOTECHNICAL ENGINEER AND SHALL EXTEND UP BOTH ABUTMENTS. THE MINIMUM BOTTOM WIDTH SHALL BE 6 FEET, BUT WIDE ENOUGH TO PERMIT OPERATION OF COMPACTION EQUIPMENT. THE SIDE SLOPES SHALL BE NO STEEPER THAN 1-1/2:1. COMPACTION REQUIREMENTS SHALL BE THE SAME AS THOSE FOR THE EMBANKMENT. THE TRENCH SHALL BE KEPT DRAINED DURING THE BACKFILLING-COMPACTING OPERATIONS.

4. EMERGENCY SPILLWAY: DESIGN ELEVATIONS, WIDTHS, ENTRANCE AND EXIT CHANNEL SLOPES ARE CRITICAL TO THE SUCCESSFUL OPERATION OF THE SPILLWAY AND SHOULD BE ADHERED TO CLOSELY DURING CONSTRUCTION.

5. VEGETATIVE STABILIZATION: FINAL VEGETATIVE COVER (STABILIZATION) SHALL CONSIST OF TOPSOILING, LIMING, FERTILIZING, SEEDING, AND MULCHING TO ASSURE A FIRM STAND OF GRASS AS SOON AS PRACTICAL. SEDIMENT BASINS AND OTHER TEMPORARY EROSION CONTROL MEASURES ARE TO BE REMOVED ONLY WHEN STABILIZATION IS COMPLETE. FINAL VEGETAL COVER SHALL BE PROVIDED IN ACCORDANCE WITH THE FOLLOWING:

TOPSOIL: AT LEAST 2" THICKNESS OBTAINED FROM STOCKPILES ON SITE, FREE OF LARGE DEBRIS.
LIME: 4,000#/ACRE (90#/1,000 S.F.)
SEED: SEE SPECIFICATIONS
FERTILIZER: 10/20/10 MIX, 1,000#/ACRE (25#/1,000 S.F.)
MULCH: STRAW OR HAY (LOCALLY OBTAINED) 4,000#/ACRE (90#/1,000 S.F.)

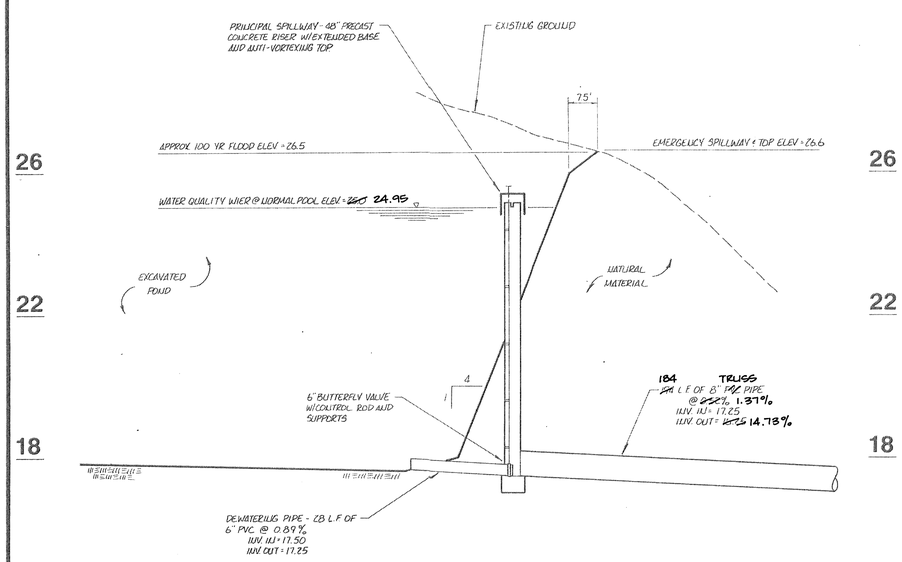

POND B
SECTION @ PRINCIPAL SPILLWAY

SCALE: 1" = 2' VERTICAL
1" = 20' HORIZONTAL

STAND-PIPE ID	CAP ID	CAP WEIGHT	INTELS $5\frac{3}{8}"\times7\frac{3}{8}"$	INTELS $7\frac{3}{8}"\times7\frac{3}{8}"$
24"	42"	1.115'	2'-8"	-
27"	48"	1.510'	3'-0"	-
30"	48"	1.510'	3'-4"	-
36"	60"	2.487'	4'-0"	-
42"	66"	2.965'	4'-4"	-
48"	78"	4.044'	4'-8"	-
54"	90"	4.844'	-	5'-4"
60"	96"	5.689'	-	5'-8"
66"	108"	7.150'	-	6'-0"
72"	114"	7.497'	-	6'-4"

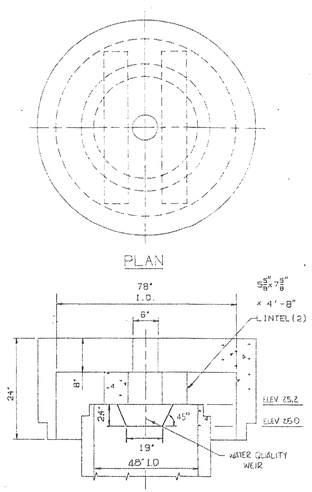

NOTE: CONTRACTOR TO POSITION INTELS SO AS NOT TO INTERFERE WITH PROPER FUNCTIONING OF WATER QUALITY WEIR, AND FOR PROPER SUPPORT OF ANTI-VORTEXING TOP.

ANTI-VORTEXING TOP

NOT TO SCALE

No.	DATE	REVISION / COMMENT / NOTE	BY
1	5/4/93	REVISED PER AGENCY REVIEW	VMB

COMMONWEALTH OF VIRGINIA
C. ARCHER MARSTON III
No. 018225
PROFESSIONAL ENGINEER
5/5/93

5248 Olde Towne Road, Suite 1
Williamsburg, Virginia 23188
(804) 253-0040
Fax (804) 220-8994
CONSULTING ENGINEERS

DAM SECTIONS AND DETAILS
HEARTHSTONE, KITCHUM'S POND & PLANTER'S ROUND
THE GOVERNOR'S LAND
POWHATAN DISTRICT JAMES CITY COUNTY VIRGINIA

Designed VMB	Drawn
Scale	Date MAR., 1993
Project No. 7173	
Drawing No. 14	

RECORD DRAWINGS 2/19/97

AES CONSULTING ENGINEERS
Engineering, Surveying and Planning
5248 Olde Towne Road, Suite 1
WILLIAMSBURG, VIRGINIA 23188

(757) 253-0040
FAX (757) 220-8994

LETTER OF TRANSMITTAL

TO James City County Environmental Division

DATE	JOB NO.
January 29, 1999	7173

ATTENTION: Dave Medlar

RE: Governor's Land
Hearthstone, Kitchum's Pond, & Planter's Round

WE ARE SENDING YOU ☒ Attached ☐ Under separate cover via _____ the following items:

☐ Shop drawings ☐ Prints ☐ Plans ☐ Samples ☐ Specifications

☐ Copy of letter ☐ Change order ☐ _____

COPIES	DATE	NO.	DESCRIPTION
2			Record Drawings for Bennett's Pond & Kitchum's Pond

7/27/99
Darryl:
This file can be closed out. L/C is 76,000 for E&S & Sub. As Builts & Calcs are on top.
David

Pond A - elev of dam too low 21.3 vs 22.0
No E. Spillway elev 21.2
Normal Pool too high 18.48 vs 17.76

THESE ARE TRANSMITTED as checked below:

☐ For approval ☐ Approved as submitted

☒ For your use ☐ Approved as noted

☒ As requested ☐ Returned for corrections

☐ For review and comment ☐ _____

☐ FOR BIDS DUE _____

REMARKS

David,

These are forwarded ~~for~~ to you for ~~[illegible]~~ satisfaction to the letter of credit on this subdivision.

Please call if you have any questions.

COPY TO _____ SIGNED: V. Marc Bennett

If enclosures are not as noted, kindly notify us at once.

James City County, Virginia
Environmental Division

Stormwater Management/BMP
Record Drawing Review Form

County Plan No. S-14-93

Project Name: Governor's Land - Kitchums Pond

Stromwater Management Faciltiy: JR-020

Component	Approved Plan	Record Drawing	OK
Top of dam (lowest point)		NA	
Top of Dam (reported)		NA	
Top width of dam		NA	
Crest of riser	25.2	NA	
Crest of Emerg. Spillway	26.6	NA	
Low Water elevation		NA	
Normal Water level	25.0	24.95	
Bottom of pond elevation		NA	
Inflow Pipe size (1)			
Inflow Pipe size (2)			
Inflow Pipe size (3)			
Barrel Diameter (inches)	8" PVC	8" TRUSS	
100 yr Storm Elevation	26.5	26.5	
Trash rack/anti-vortex type		Concrete	
Forbay, baffle wall, etc.		None	
Pond drain elevation			
		No PE seal on plans	

Date: 1/8/03

Name: R. Hall

Found approved plan for 5-12-94

AES CONSULTING ENGINEERS
Engineering, Surveying and Planning
5248 Olde Towne Road, Suite 1
Williamsburg, Virginia 23188
Phone: (757) 253-0040
Fax: (757) 220-8994

LETTER OF TRANSMITTAL

DATE: 13-May-03	JOB NO. 7173-09
ATTENTION: Scott Thomas	
RE: Governor's Land	

MAY 2003

TO : James City County
Environmental Division
101 Mounts Bay Road
Williamsburg, VA 23187

WE ARE SENDING YOU: [X] Attached [ ] Under separate cover via _____ the following items:

[ ] Shop drawings [X] Prints [X] Plans [ ] Samples [ ] Specifications

[X] Copy of letter [ ] Change order [X] Other Construction Certification

COPIES	DATE	NO.	DESCRIPTION
1	5-13-03		As-Built drawing (Mylar) – Kitchum's Pond JR020
1	5-13-03		As-Built drawing (Black line) - Kitchum's Pond JR020
1	5-13-03		Memo responding to letter from County - Kitchum's Pond JR020

THESE ARE TRANSMITTED as checked below:

[X] For Approval [ ] Approved as submitted [ ] Resubmit _____ copies for approval

[ ] For your use [ ] Approved as noted [ ] Submit _____ copies for distribution

[ ] As requested [ ] Returned for corrections [ ] Return _____ Corrected prints

[ ] For review and comment [ ] For Signature

[ ] FOR BIDS DUE _____ [ ] PRINTS RETURNED AFTER LOAN TO US

REMARKS:
If you have any questions please contact me. Thank you.

COPIES TO: file

SIGNED: Victoria Bains
Victoria Bains

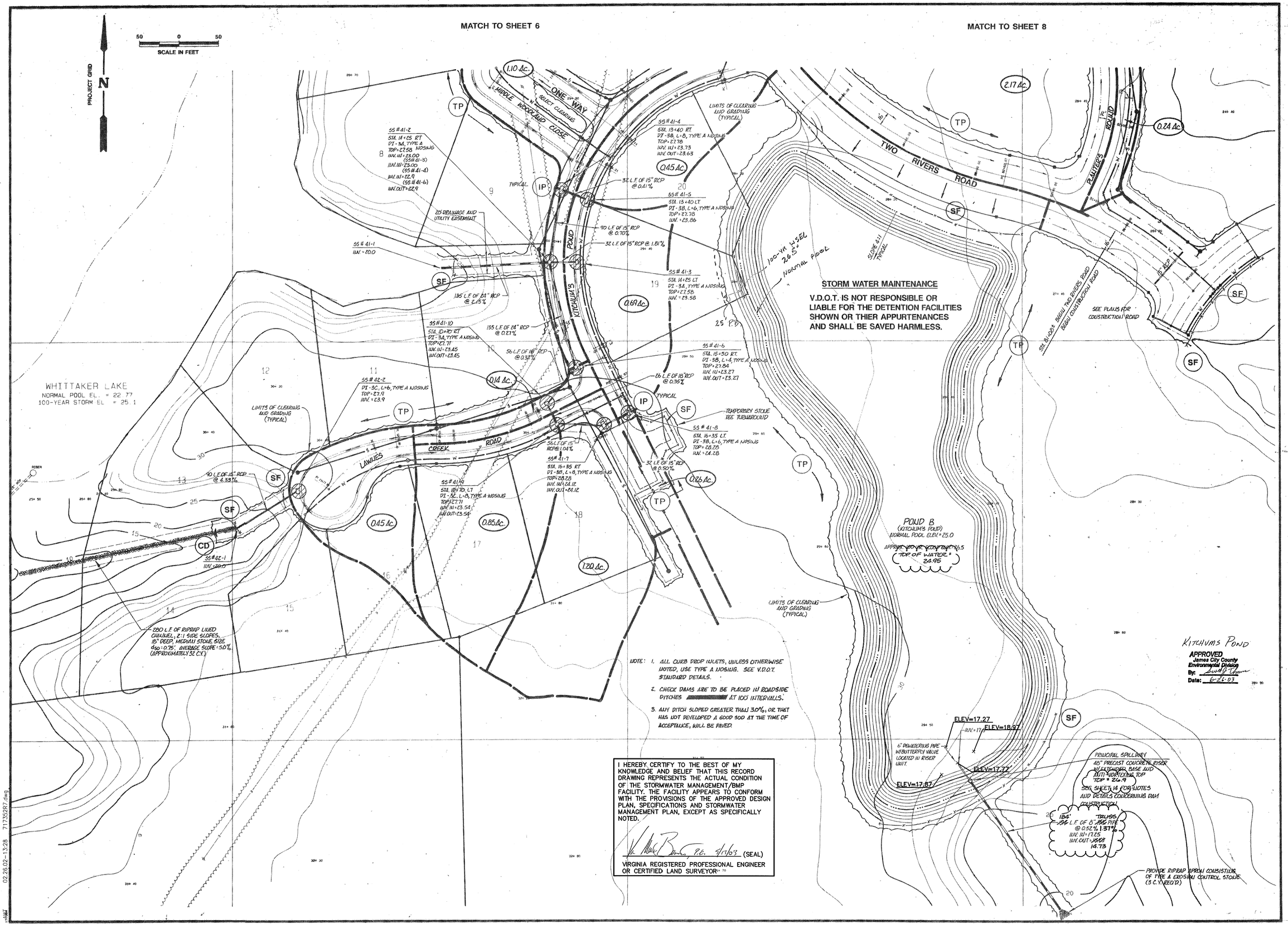

No.	DATE	REVISION / COMMENT / NOTE	BY
3	3/10/03	REVISIONS AS PER JAMES CITY COUNTY REVIEW	VMB
2	2/19/03	REVISED PER JCC COMMENTS	VMB
1	5/14/93	REVISED PER ASSOCIATES/DEQ	VMB

5248 Olde Towne Road, Suite 1
Williamsburg, Virginia 23188
(804) 253-0040
Fax (804) 220-8994
CONSULTING ENGINEERS

DRAINAGE AND EROSION CONTROL PLAN
HEARTHSTONE, KITCHUM'S POND & PLANTER'S ROUND
THE GOVERNOR'S LAND at Two Rivers

POWHATAN DISTRICT JAMES CITY COUNTY VIRGINIA

Designed VMB	Drawn
Scale 1"=50'	Date MAR., 1993
Project No. 7173	
Drawing No. 7	

717352R7.dwg
02.26.02 - 13:28

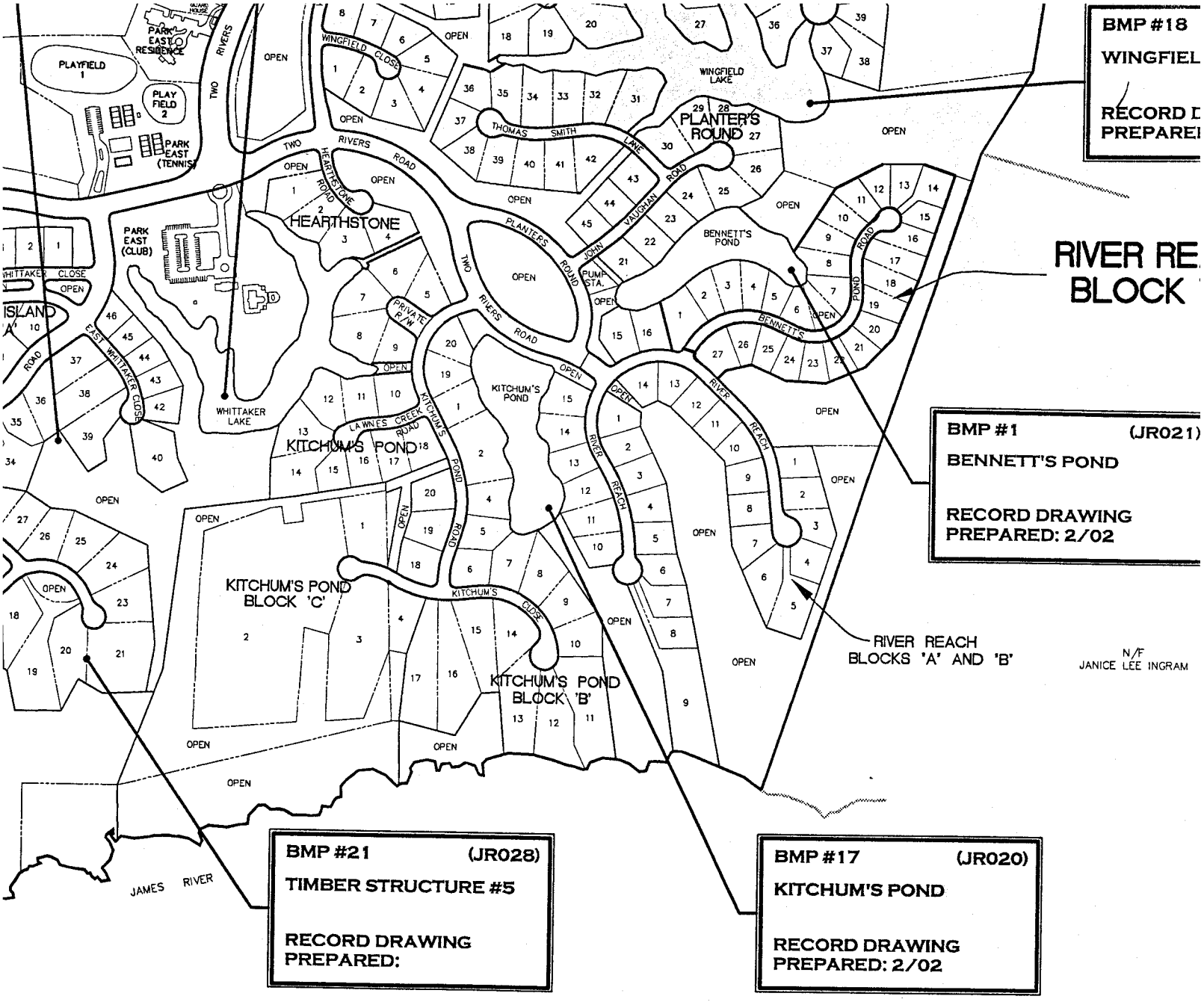

BMP #14 (JR016)

TRAVIS POND

RECORD DRAWING PREPARED: 3/02

42"	66"	2.965T	4'-4"	-
48"	78"	4.044T	4'-8"	-
54"	90"	4.844T	-	5'-4"
60"	96"	5.689T	-	5'-8"
66"	108"	7.150T	-	6'-0"
72"	114"	7.497T	-	6'-4"

Approved

Kitchums Pond

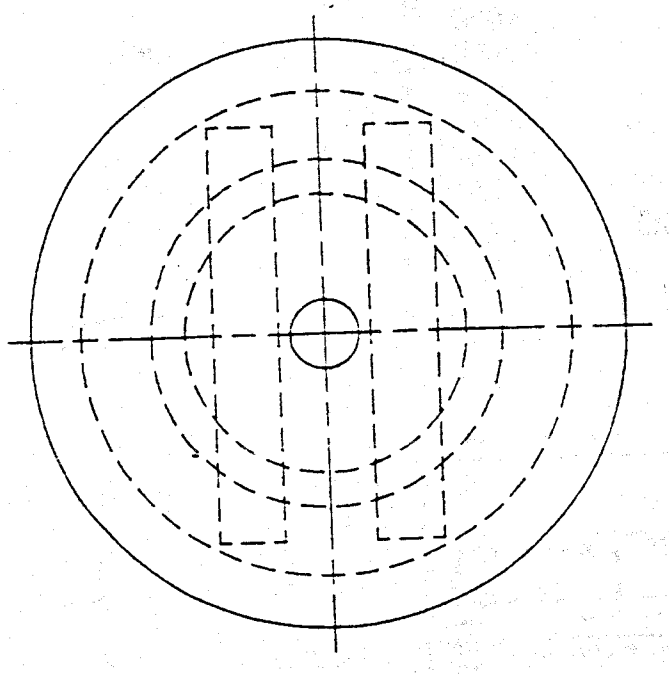

PLAN

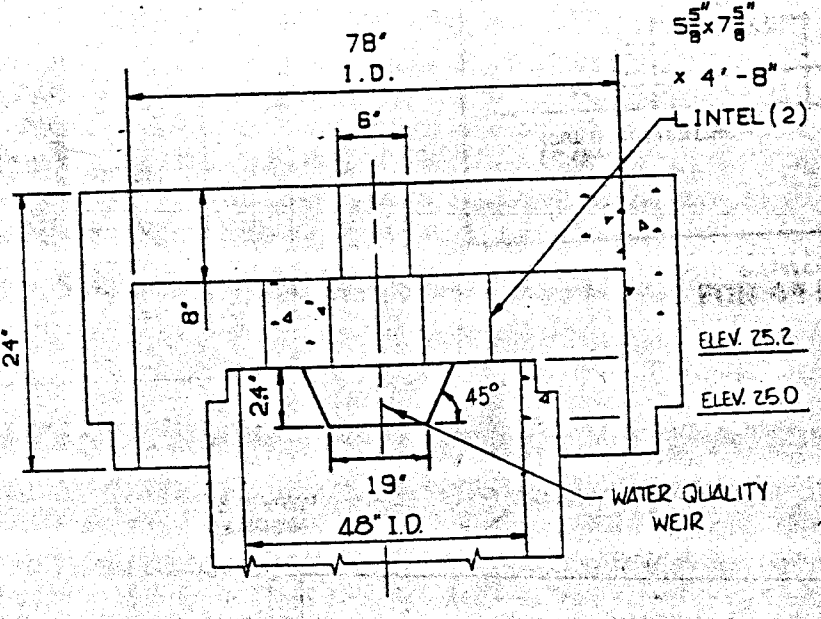

SECTION

NOTE: CONTRACTOR TO POSITION LINTELS SO AS NOT TO INTERFERE WITH PROPER FUNCTIONING OF WATER QUALITY WEIR, AND FOR PROPER SUPPORT OF ANTI-VORTEXING TOP.

ANTI-VORTEXING TOP

NOT TO SCALE

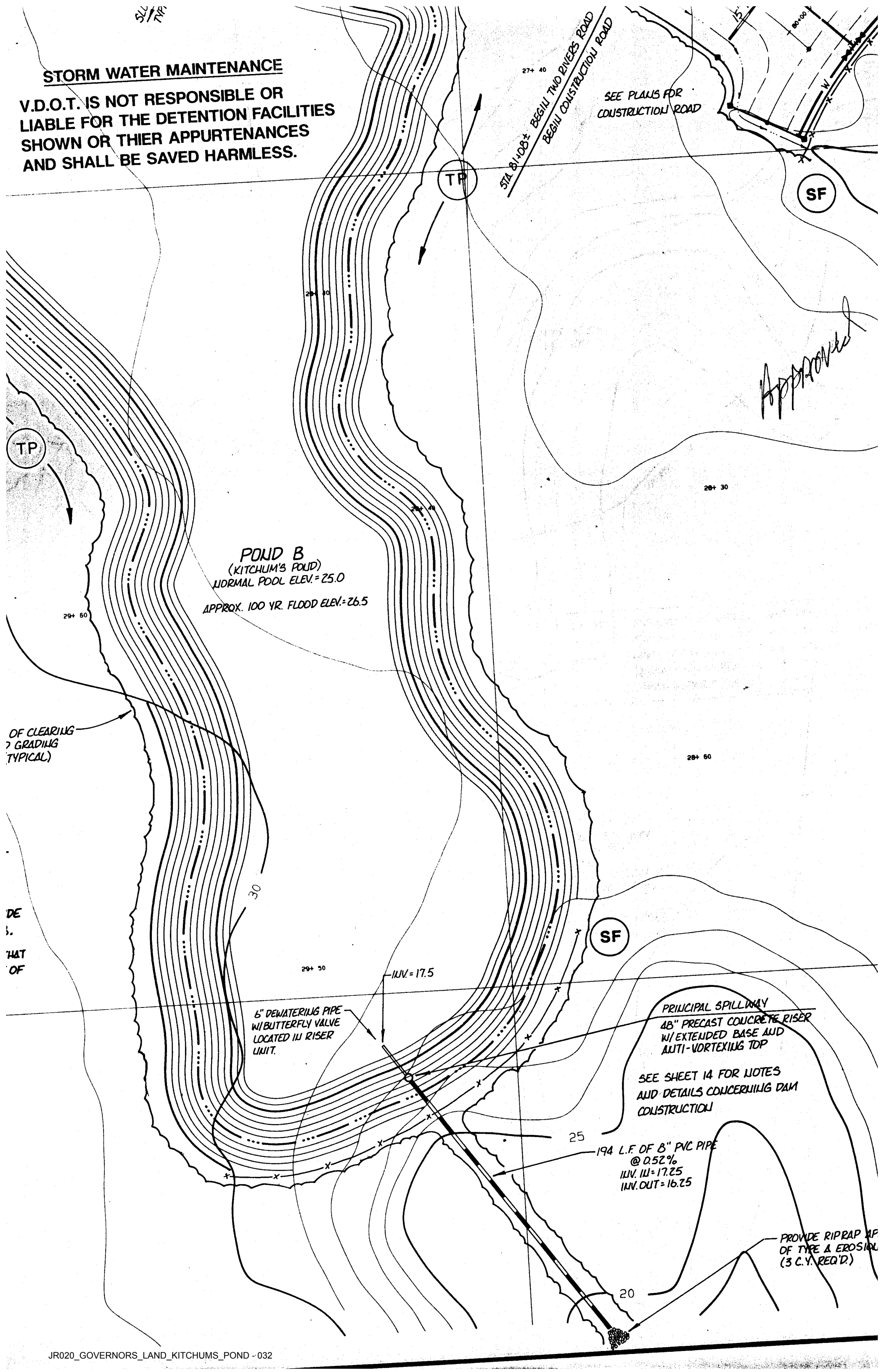
STORM WATER MAINTENANCE
V.D.O.T. IS NOT RESPONSIBLE OR LIABLE FOR THE DETENTION FACILITIES SHOWN OR THIER APPURTENANCES AND SHALL BE SAVED HARMLESS.
STA. 81+08± BEGIN TWO RIVERS ROAD
BEGIN CONSTRUCTION ROAD
SEE PLANS FOR CONSTRUCTION ROAD
TP
SF
Approved
POND B
(KITCHUM'S POND)
NORMAL POOL ELEV.=25.0
APPROX. 100 YR. FLOOD ELEV.=26.5
INV.=17.5
6" DEWATERING PIPE W/BUTTERFLY VALVE LOCATED IN RISER UNIT.
PRINCIPAL SPILLWAY
48" PRECAST CONCRETE RISER W/EXTENDED BASE AND ANTI-VORTEXING TOP
SEE SHEET 14 FOR NOTES AND DETAILS CONCERNING DAM CONSTRUCTION
194 L.F. OF 8" PVC PIPE @ 0.52%
INV. IN=17.25
INV. OUT=16.25
PROVIDE RIPRAP AP OF TYPE A EROSION (3 C.Y. REQ'D.)
25
20
30
27+ 40
28+ 30
28+ 60
29+ 50
29+ 60

Kitchum's

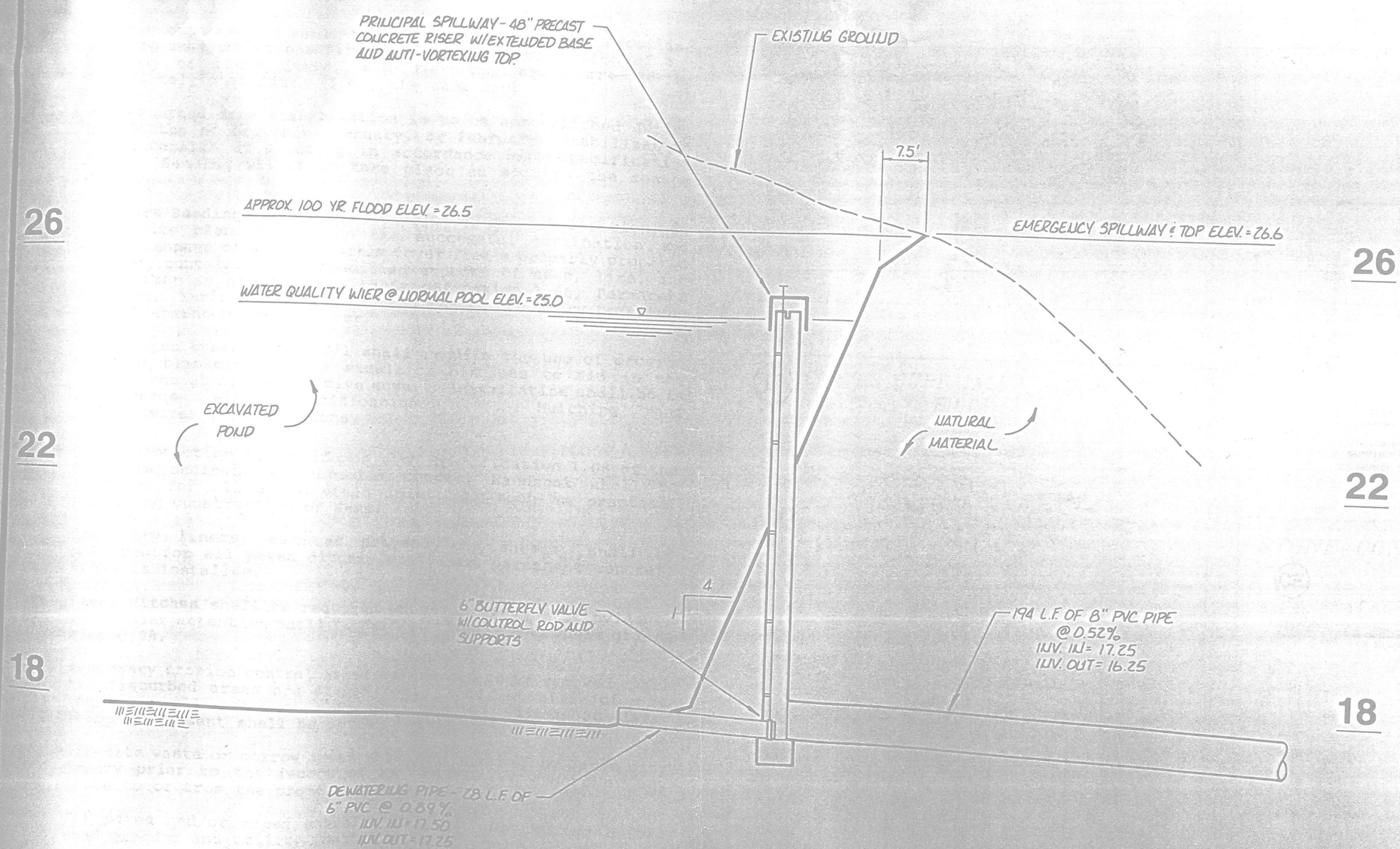

STAND-PIPE ID	CAP ID	CAP WEIGHT
24"	42"	1.115T
27"	48"	1.510T
30"	48"	1.510T
36"	60"	2.487T
42"	66"	2.965T
48"	78"	4.044T
54"	90"	4.844T
60"	96"	5.689T
66"	108"	7.150T
72"	114"	7.497T

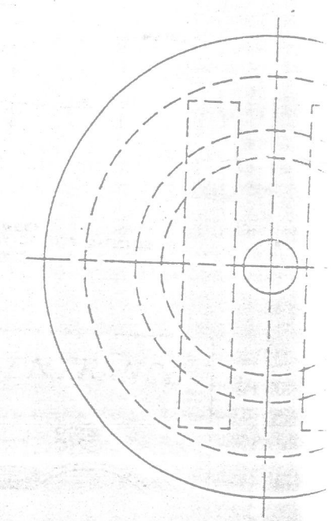

PLAN

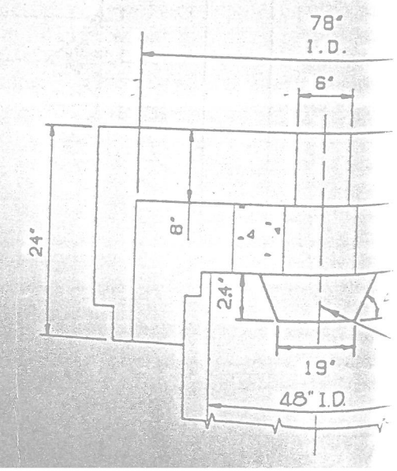

POND B
SECTION @ PRINCIPAL SPILLWAY

GOVERNOR'S LAND
BAY 5, POD 2, POND B
DESIGN OF POND B

2/11/93

Kitchums Pond

JR 020

PRE-DEVELOPMENT CONDITIONS

- DRAINAGE AREA = 3.07 AC
- SOIL TYPE BREAKDOWN

TYPE	HYDROLOGIC GROUP	PRE-DEVELOPMENT USE	CN ASSIGNED	ACRES
27	D	WOODS, FAIR	79	3.07

- BASIN SLOPE 0.85%
- HYDRAULIC LENGTH = 850'
- WEIGHTED CN = 79
- SHAPE FACTOR 375
- 24 HR 2 YEAR STORM RAINFALL = 3.7 IN

RESULTS Q_p = 3.5 CFS
VOLUME = 15341 CF

KITCHUMS POND

GOVERNOR'S LAND
BAY 5, POD 2, POND B
DESIGN OF POND B

2/11/93

REQUIRED VOLUME FOR 9 POINT BMP (DESIGN 7) (4.0 VR)

VOL OF POND = (4)(1/2"/ACRE)(DA)(VR)

V_R = 0.05 + (0.009) (% of IMPERVIOUS POST DEV AREA)

Sed Basin -

IMPERVIOUS BREAKDOWN

20 ac @ 67 CY = 1340 CY

LAKE	4.0 Ac
ROADS	2.25 Ac
1/2 Ac LOTS (IMPERVIOUS COVER) =	2.25 Ac
	8.5 Ac

8.5 Ac / 19.85 Ac = 0.43 or 42.8 % impervious

so V_R = 0.05 + (0.009) (42.8) = 0.435

VOL OF POND = (4) (1/2"/Acre) (19.85)(0.435)
= (4) (0.0417) (19.85) (0.435)
= 1.439 Ac Ft =
= 62700 CU Ft
= 2322 CY

REQUIRED VOLUME ABOVE 9 POINT BMP FOR ADDITIONAL 2 POINT BMP

VOL = (1/2" over Acre) (19.85 Ac)
= (0.0417) (19.85 Ac) = 0.83 Ac Ft =
= 36056 CF
= 1335 CY

SEDIMENT CAPACITY

(19.85 Ac) (67.7 CY/Ac) = 1344 CY × $7/CY = $9380 excav.
= 0.83 Ac Ft

3000 - Riser/Barrel RR

GOVERNOR'S LAND
BAY 5, POD 2, POND B
DESIGN OF POND B
DESIGN OF WATER QUALITY OUTLET

2/11/93

VOLUME OF WATER QUALITY TO BE DISCHARGED = 1335 CY = 36056 CF

NORMAL POOL EL = 23.5 — plan says 25.0
POOL ELEVATION FOR WATER QUALITY = 23.7

NET HEAD DEVELOPED ON WATER QUALITY OUTLET STRUCTURE = 0.20 ft.

USING A SHARP CRESTED TRAPEZOIDAL SHAPED WEIR

Q_{MAX} = 36056 CF / 86400 SEC = 0.42 CFS

USING EQ. $Q = C_2 L H^{3/2} + C_3 Z H^{5/2}$
$H = 0.20$ ft
$Z = b/H$
ASSUME $C_2 = C_3 = 2.6$ (GOOD AVERAGE VALUE)

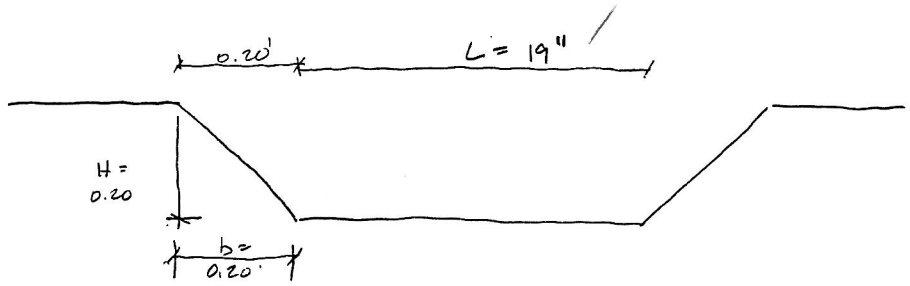

SOLVING FOR L, WE HAVE

$0.42 = (2.6)\,L\,(0.20)^{3/2} + 2.6\,(0.20/0.20)\,(0.20)^{5/2}$
$0.42 = (2.6)(L)(0.0894) + 2.6\,(1)(0.0227)$
$0.42 = 0.232\,L + 0.0465$
$0.374 = 0.232\,L$
$L = 1.61$ ft = 19"

GOVERNOR'S LAND
BAY 5, POD 2, POND B
DESIGN OF POND B

2/11/93

VOLUME TABULATION

ELEVATION		DEPTH	AREA	VOLUME	Σ VOLUME	STORM VOLUME
18			109093 SQ FT			
19		1	116825 SQ FT	4184 CY	4184 CY	
20		1	124661 SQ FT	4472 CY	8656 CY	
21		1	132600 SQ FT	4764 CY	13420 CY	
22		1	140643 SQ FT	5060 CY	18480 CY	
23		1	148788 SQ FT	5360 CY	23840 CY	
24		1	157037 SQ FT	5663 CY	29503 CY	
25	NORMAL POOL	1	165389 SQ FT	5971 CY	35474 CY	0
26		1	173843 SQ FT	6282 CY	41756 CY	~6282 CY
27		1	~182422 SQ. FT.	~6598 CY	~48354 CY	~12880 CY

POND HAS ALL NECESSARY VOLUMES FOR:
4.0 VR
WATER QUALITY
SEDIMENT STORAGE

THE FOLLOWING PAGES PROVIDE INFORMATION REGARDING THE 2 YEAR 24 HOUR STORM, PRE-DEVELOPMENT HYDROGRAPH.

HYDROLOGIC REPORT

POND B. BAY 5, POD 2..
PRE-DEVELOPMENT.....
2-YEAR 24-HOUR STORM..

Hyd. No. 1

Hydrograph type	= S.C.S. RUNOFF	Peak discharge	= 3.45 cfs
Storm frequency	= 2 yr	Time interval	= 5 min
Basin area	= 3.07 ac	Basin curve No.	= 77
Ave basin slope	= .95 %	Hydraulic len	= 850 ft
Basin lag	= 18.7 min	Time of concen	= 31.20 min
Total precip.	= 3.70 in	Distribution	= S.C.S. II

HYDROGRAPH DISCHARGE TABLE

TIME--OUTFLOW (hrs cfs)		TIME--OUTFLOW (hrs cfs)		TIME--OUTFLOW (hrs cfs)		TIME--OUTFLOW (hrs cfS)	
11.75	0.49	11.83	0.85	11.92	1.52	12.00	2.32
12.08	3.02	12.17	3.45	12.25	3.37	12.33	2.99
12.42	2.57	12.50	2.11	12.58	1.65	12.67	1.21

Volume = 15341 CF OR 0.35 Ac ft.

2/11/93

GOVERNOR'S LAND
BAY 5, POD 2, POND B
DESIGN OF POND B

POST-DEVELOPMENT CONDITIONS

- DRAINAGE AREA = 19.85 Ac

- SOIL TYPE BREAKDOWN

TYPE	HYDROLOGIC GROUP	POST-DEVELOPMENT USE	CN ASSIGNED	ACRES	CN*A
27	D	LAKE	100	4	400
27	D	1/2 Ac RES. LOTS	87	15.85	1378.95

- WEIGHTED CN (POST-DEVELOPMENT) = $\frac{400 + 1378.95}{19.85}$ = 90

- BASIN SLOPE = 0.85%

- HYDRAULIC LENGTH = 750'

- SHAPE FACTOR = 375

- 24 HR 100 YEAR STORM RAINFALL = 8.1 IN

- Q_p = 107.4 CFS
  VOLUME = 390869 CF = 14476 CY

THE FOLLOWING SHEET PROVIDES INFORMATION REGARDING THE 100 YEAR 24-HOUR, POST DEVELOPMENT HYDROGRAPH FOR BAY 5, POD 2, POND B.

HYDROLOGIC REPORT

POND B , BAY 5, POD 2.
POST-DEVELOPMENT.....
100-YEAR 24-HR STORM..

Hyd. No. 2

Hydrograph type	= S.C.S. RUNOFF	Peak discharge	= 107.39 cfs
Storm frequency	= 100 yr	Time interval	= 2 min
Basin area	= 19.85 ac	Basin curve No.	= 90
Ave basin slope	= .85 %	Hydraulic len	= 750 ft
Basin lag	= 13.2 min	Time of concen	= 22.00 min
Total precip.	= 8.10 in	Distribution	= S.C.S. II

HYDROGRAPH DISCHARGE TABLE

TIME--OUTFLOW (hrs cfs)		TIME--OUTFLOW (hrs cfs)		TIME--OUTFLOW (hrs cfs)		TIME--OUTFLOW (hrs cfS)	
11.50	10.20	11.53	10.72	11.57	11.43	11.60	12.48
11.63	13.99	11.67	16.06	11.70	18.88	11.73	22.56
11.77	27.11	11.80	32.77	11.83	39.73	11.87	48.21
11.90	58.39	11.93	69.82	11.97	81.34	12.00	91.77
12.03	100.03	12.07	105.46	12.10	107.39	12.13	105.13
12.17	99.13	12.20	90.86	12.23	81.87	12.27	72.94
12.30	64.20	12.33	55.72	12.37	47.61	12.40	39.97
12.43	33.03	12.47	27.04	12.50	22.25	12.53	18.92
12.57	16.93	12.60	15.77	12.63	14.92	12.67	14.11
12.70	13.37	12.73	12.70	12.77	12.10	12.80	11.56
12.83	11.09	12.87	10.67	12.90	10.30	12.93	9.97

VOLUME = 390869 CU FT
8.97 AC FT

GOVERNOR'S LAND
BAY 5, POD 2
POND B.

THE FOLLOWING INFORMATION PROVIDES INFORMATION REGARDING POND B, AND THE OUTFLOW HYDROGRAPH OF ROUTING THE 100 YEAR - 24 HOUR POST DEVELOPMENT STORM THROUGH THE DESIGNED POND.

Option 1 STAGE / STORAGE TABLE R to reset

1. RESERVOIR No = 3. 2. RESERVOIR NAME = POND B.....

3. S = Ks * Z^b

Ks = 0..... b = 0.....

START ELEV = 0..... INCREMENT = 0...

	STAGE ft	ELEVATION ft	CO AREA sq ft	INC STORAGE cu ft	TOT STORAGE cu ft
4	0.00	25.00.	165389..	0	0
5	1.00	26.00.	173843..	169616	169616
6	2.00	27.00.	182422..	178132	347748
7	0.00	0.00.	0.....	0	0
8	0.00	0.00.	0.....	0	0
9	0.00	0.00.	0.....	0	0
10	0.00	0.00.	0.....	0	0
11	0.00	0.00.	0.....	0	0
12	0.00	0.00.	0.....	0	0
13	0.00	0.00.	0.....	0	0
14	0.00	0.00.	0.....	0	0

Change item number: 0 DY to cont

Reservoir No. 3 OUTLET STRUCTURES

```
IMMMMMMMMMMMMMMMMMMMMMMMMMMMMMMMMMMMMMMMMMMMMMMMMMMMMMMMMMMMMMMMMMMMMMMMMMMM;
: CULVERT STRUC  A. Q=CoA[2gh/k]^.5     CULVERT STRUC  B. Q=CoA[2gh/k]^.5    :
:                                                                             :
  1. WIDTH  (in)     = 8..               9. WIDTH  (in)     = 0..             :
. 2. HEIGHT (in)     = 8..              10. HEIGHT (in)     = 0..             :
: 3. No. BARRELS     = 1..              11. No. BARRELS     = 0..             :
: 4. INVERT ELEV.    = 17.25....        12. INVERT ELEV.    = 0........       :
: 5. Co = 0.60                          13. Co = 0.60                         :
: 6. CULVERT LENGTH (ft) = 194 .        14. CULVERT LENGTH (ft) = 0...        :
: 7. CULVERT SLOPE (%)   = 0.52 .       15. CULVERT SLOPE (%)   = 0...        :
: 8. MANNING'S N-VALUE   = .013         16. MANNING'S N-VALUE   = .013        :
:                                       17. MULTI-STAGE OPTION ? (Y/N) N      :
:                                                                             :
: WEIR STRUCTURE A.      Q=CwLH^EXP     WEIR STRUCTURE B.      Q=CwLH^EXP     :
:                                                                             :
: 18. CREST LENGTH (ft)  = 12.57..      23. CREST LENGTH (ft)  = 15.....      :
: 19. CREST ELEVATION    = 25.2         24. CREST ELEVATION    = 26.6...      :
: 20. Cw = %2463.00                     25. Cw = 2.63                         :
: 21. EXP = %26.00                      26. EXP = 1.50                        :
: 22. MULTI-STAGE OPTION ? (Y/N) Y      27. MULTI-STAGE OPTION ? (Y/N) N      :
:                                                                             :
:                                                                             :
HMMMMMMMMMMMMMMMMMMMMMMMMMMMMMMMMMMMMMMMMMMMMMMMMMMMMMMMMMMMMMMMMMMMMMMMMMMM<
Change item number: 0                                          DY to cont
```

HYDROLOGIC REPORT

100-YEAR STORM ROUTING
POND B.....
.....

Hyd. No. 3

Hydrograph type = RESERVOIR ROUTE Peak discharge = 5.02 cfs
Storm frequency = 100 yr Time interval = 2 min
Inflow hyd. no. = 2 Reservoir no. = 3

HYDROGRAPH DISCHARGE TABLE

TIME hrs	INFLOW (i) cfs	INFLOW (j) cfs	2S/dt-O (i) cfs	2S/dt+O (j) cfs	OUTFLOW cfs
9.57	3.01	3.02	479.68	479.68	0.00
9.60	3.02	3.03	485.70	485.70	0.00
9.63	3.03	3.05	491.75	491.75	0.00
9.67	3.05	3.07	497.83	497.83	0.00
9.70	3.07	3.10	503.96	503.96	0.00
9.73	3.10	3.13	510.13	510.13	0.00
9.77	3.13	3.17	516.37	516.37	0.00
9.80	3.17	3.21	522.67	522.67	0.00
9.83	3.21	3.26	529.05	529.05	0.00
9.87	3.26	3.31	535.52	535.52	0.00
9.90	3.31	3.36	542.09	542.09	0.00
9.93	3.36	3.42	548.76	548.76	0.00
9.97	3.42	3.47	555.53	555.53	0.00
10.00	3.47	3.53	562.42	562.42	0.00
10.03	3.53	3.59	569.39	569.42	0.01
10.07	3.59	3.66	576.44	576.52	0.04
10.10	3.66	3.72	583.55	583.69	0.07
10.13	3.72	3.79	590.74	590.93	0.09
10.17	3.79	3.86	598.01	598.25	0.12
10.20	3.86	3.93	605.36	605.66	0.15
10.23	3.93	4.01	612.80	613.15	0.18
10.27	4.01	4.09	620.34	620.74	0.20
10.30	4.09	4.17	627.97	628.43	0.23
10.33	4.17	4.25	635.70	636.22	0.26
10.37	4.25	4.34	643.54	644.12	0.29

HYDROGRAPH DISCHARGE TABLE Cont'd

TIME hrs	INFLOW (i) cfs	INFLOW (j) cfs	2S/dt-O (i) cfs	2S/dt+O (j) cfs	OUTFLOW cfs
10.40	4.34	4.43	651.49	652.13	0.32
10.43	4.43	4.52	659.56	660.26	0.35
10.47	4.52	4.61	667.74	668.50	0.38
10.50	4.61	4.70	676.04	676.86	0.41
10.53	4.70	4.79	684.46	685.35	0.44
10.57	4.79	4.89	693.01	693.96	0.47
10.60	4.89	4.99	701.68	702.70	0.51
10.63	4.99	5.10	710.49	711.57	0.54
10.67	5.10	5.21	719.44	720.59	0.57
10.70	5.21	5.33	728.54	729.75	0.61
10.73	5.33	5.45	737.80	739.08	0.64
10.77	5.45	5.58	747.23	748.58	0.67
10.80	5.58	5.71	756.83	758.26	0.71
10.83	5.71	5.85	766.63	768.13	0.75
10.87	5.85	5.99	776.63	778.19	0.78
10.90	5.99	6.14	786.83	788.47	0.82
10.93	6.14	6.29	797.24	798.96	0.86
10.97	6.29	6.44	807.87	809.67	0.90
11.00	6.44	6.55	818.73	820.61	0.94
11.03	6.55	6.67	829.77	831.73	0.98
11.07	6.67	6.79	840.94	842.99	1.02
11.10	6.79	6.93	852.24	854.40	1.08
11.13	6.93	7.08	863.64	865.96	1.16
11.17	7.08	7.25	875.18	877.65	1.24
11.20	7.25	7.43	886.87	889.50	1.32
11.23	7.43	7.72	898.75	901.55	1.40
11.27	7.72	8.03	910.95	913.91	1.48
11.30	8.03	8.35	923.56	926.70	1.57
11.33	8.35	8.70	936.64	939.95	1.66
11.37	8.70	9.05	950.19	953.69	1.75
11.40	9.05	9.42	964.25	967.94	1.84
11.43	9.42	9.81	978.85	982.73	1.94
11.47	9.81	10.20	993.99	998.08	2.05
11.50	10.20	10.72	1009.69	1014.00	2.15
11.53	10.72	11.43	1026.08	1030.61	2.26
11.57	11.43	12.48	1043.47	1048.23	2.38
11.60	12.48	13.99	1062.36	1067.38	2.51
11.63	13.99	16.06	1083.52	1088.83	2.66
11.67	16.06	18.88	1107.93	1113.57	2.82
11.70	18.88	22.56	1136.84	1142.87	3.01
11.73	22.56	27.11	1171.81	1178.28	3.23
11.77	27.11	32.77	1214.48	1221.48	3.50

HYDROGRAPH DISCHARGE TABLE Cont'd

TIME hrs	INFLOW (i) cfs	INFLOW (j) cfs	2S/dt-O (i) cfs	2S/dt+O (j) cfs	OUTFLOW cfs
11.80	32.77	39.73	1266.69	1274.35	3.83
11.83	39.73	48.21	1330.72	1339.19	4.24
11.87	48.21	58.39	1409.20	1418.66	4.73
11.90	58.39	69.82	1506.32	1515.80	4.74
11.93	69.82	81.34	1625.03	1634.53	4.75
11.97	81.34	91.77	1766.66	1776.19	4.77
12.00	91.77	100.03	1930.21	1939.78	4.78
12.03	100.03	105.46	2112.41	2122.01	4.80
12.07	105.46	107.39	2308.25	2317.90	4.82
12.10	107.39	105.13	2511.42	2521.11	4.84
12.13	105.13	99.13	2714.21	2723.94	4.86
12.17	99.13	90.86	2908.71	2918.48	4.88
12.20	90.86	81.87	3088.90	3098.70	4.90
12.23	81.87	72.94	3251.79	3261.62	4.92
12.27	72.94	64.20	3396.73	3406.60	4.93
12.30	64.20	55.72	3523.99	3533.88	4.94
12.33	55.72	47.61	3634.01	3643.92	4.95
12.37	47.61	39.97	3727.41	3737.34	4.96
12.40	39.97	33.03	3805.05	3814.99	4.97
12.43	33.03	27.04	3868.10	3878.05	4.98
12.47	27.04	22.25	3918.20	3928.16	4.98
12.50	22.25	18.92	3957.51	3967.48	4.99
12.53	18.92	16.93	3988.70	3998.68	4.99
12.57	16.93	15.77	4014.58	4024.56	4.99
12.60	15.77	14.92	4037.30	4047.28	4.99
12.63	14.92	14.11	4058.00	4067.99	4.99
12.67	14.11	13.37	4077.03	4087.03	5.00
12.70	13.37	12.70	4094.52	4104.51	5.00
12.73	12.70	12.10	4110.58	4120.58	5.00
12.77	12.10	11.56	4125.37	4135.38	5.00
12.80	11.56	11.09	4139.03	4149.03	5.00
12.83	11.09	10.67	4151.67	4161.68	5.00
12.87	10.67	10.30	4163.42	4173.43	5.00
12.90	10.30	9.97	4174.38	4184.40	5.01
12.93	9.97	9.68	4184.64	4194.65	5.01
12.97	9.68	9.41	4194.27	4204.29	5.01
13.00	9.41	9.17	4203.34	4213.36	5.01
13.03	9.17	8.94	4211.90	4221.92	5.01
13.07	8.94	8.73	4219.99	4230.01	5.01
13.10	8.73	8.53	4227.65	4237.67	5.01
13.13	8.53	8.33	4234.89	4244.91	5.01
13.17	8.33	8.14	4241.72	4251.75	5.01

HYDROGRAPH DISCHARGE TABLE Cont'd

TIME hrs	INFLOW (i) cfs	INFLOW (j) cfs	2S/dt-O (i) cfs	2S/dt+O (j) cfs	OUTFLOW cfs
13.20	8.14	7.97	4248.18	4258.20	5.01
13.23	7.97	7.80	4254.26	4264.29	5.01
13.27	7.80	7.64	4260.00	4270.02	5.01
13.30	7.64	7.49	4265.40	4275.43	5.01
13.33	7.49	7.34	4270.50	4280.53	5.01
13.37	7.34	7.21	4275.30	4285.33	5.02
13.40	7.21	7.08	4279.82	4289.85	5.02
13.43	7.08	6.95	4284.07	4294.10	5.02
13.47	6.95	6.83	4288.06	4298.09	5.02
13.50	6.83	6.71	4291.80	4301.83	5.02
13.53	6.71	6.59	4295.30	4305.33	5.02
13.57	6.59	6.48	4298.56	4308.59	5.02
13.60	6.48	6.36	4301.59	4311.62	5.02
13.63	6.36	6.25	4304.39	4314.43	5.02
13.67	6.25	6.15	4306.97	4317.01	5.02
13.70	6.15	6.04	4309.33	4319.37	5.02
13.73	6.04	5.94	4311.48	4321.52	5.02
13.77	5.94	5.84	4313.43	4323.47	5.02
13.80	5.84	5.75	4315.18	4325.22	5.02
13.83	5.75	5.66	4316.74	4326.77	5.02
13.87	5.66	5.57	4318.11	4328.14	5.02
13.90	5.57	5.48	4319.29	4329.33	5.02
13.93	5.48	5.39	4320.30	4330.34	5.02
13.97	5.39	5.31	4321.13	4331.17	5.02
14.00	5.31	5.22	4321.79	4331.83	5.02
14.03	5.22	5.14	4322.29	4332.33	5.02
14.07	5.14	5.06	4322.61	4332.65	5.02
14.10	5.06	4.99	4322.78	4332.82	5.02
14.13	4.99	4.91	4322.79	4332.83	5.02
14.17	4.91	4.84	4322.65	4332.69	5.02
14.20	4.84	4.78	4322.36	4332.40	5.02
14.23	4.78	4.72	4321.95	4331.99	5.02
14.27	4.72	4.67	4321.42	4331.46	5.02
14.30	4.67	4.62	4320.77	4330.81	5.02
14.33	4.62	4.58	4320.03	4330.07	5.02
14.37	4.58	4.54	4319.19	4329.23	5.02
14.40	4.54	4.50	4318.27	4328.31	5.02
14.43	4.50	4.47	4317.27	4327.31	5.02
14.47	4.47	4.43	4316.20	4326.24	5.02
14.50	4.43	4.40	4315.06	4325.10	5.02
14.53	4.40	4.37	4313.86	4323.90	5.02
14.57	4.37	4.34	4312.60	4322.63	5.02

HYDROGRAPH DISCHARGE TABLE Cont'd

TIME hrs	INFLOW (i) cfs	INFLOW (j) cfs	2S/dt-O (i) cfs	2S/dt+O (j) cfs	OUTFLOW cfs
14.60	4.34	4.31	4311.27	4321.31	5.02
14.63	4.31	4.29	4309.90	4319.93	5.02
14.67	4.29	4.26	4308.46	4318.49	5.02
14.70	4.26	4.23	4306.96	4317.00	5.02
14.73	4.23	4.20	4305.41	4315.45	5.02
14.77	4.20	4.17	4303.80	4313.83	5.02
14.80	4.17	4.14	4302.13	4312.17	5.02
14.83	4.14	4.11	4300.40	4310.44	5.02
14.87	4.11	4.08	4298.62	4308.66	5.02
14.90	4.08	4.05	4296.78	4306.81	5.02
14.93	4.05	4.02	4294.88	4304.92	5.02
14.97	4.02	4.00	4292.92	4302.96	5.02
15.00	4.00	3.97	4290.91	4300.94	5.02
15.03	3.97	3.94	4288.84	4298.87	5.02
15.07	3.94	3.91	4286.71	4296.74	5.02
15.10	3.91	3.88	4284.52	4294.55	5.02
15.13	3.88	3.85	4282.28	4292.31	5.02
15.17	3.85	3.82	4279.97	4290.01	5.02
15.20	3.82	3.79	4277.61	4287.65	5.02
15.23	3.79	3.76	4275.20	4285.23	5.02
15.27	3.76	3.73	4272.72	4282.75	5.02
15.30	3.73	3.70	4270.19	4280.22	5.01
15.33	3.70	3.68	4267.60	4277.63	5.01
15.37	3.68	3.65	4264.95	4274.98	5.01
15.40	3.65	3.62	4262.24	4272.27	5.01
15.43	3.62	3.59	4259.48	4269.51	5.01
15.47	3.59	3.56	4256.66	4266.69	5.01
15.50	3.56	3.53	4253.78	4263.81	5.01
15.53	3.53	3.50	4250.84	4260.87	5.01
15.57	3.50	3.47	4247.85	4257.88	5.01
15.60	3.47	3.44	4244.80	4254.82	5.01
15.63	3.44	3.41	4241.69	4251.71	5.01
15.67	3.41	3.38	4238.52	4248.54	5.01
15.70	3.38	3.36	4235.30	4245.32	5.01
15.73	3.36	3.33	4232.01	4242.04	5.01
15.77	3.33	3.30	4228.67	4238.70	5.01
15.80	3.30	3.27	4225.28	4235.30	5.01
15.83	3.27	3.24	4221.82	4231.84	5.01
15.87	3.24	3.21	4218.31	4228.33	5.01
15.90	3.21	3.18	4214.74	4224.76	5.01
15.93	3.18	3.15	4211.11	4221.13	5.01
15.97	3.15	3.12	4207.42	4217.44	5.01

HYDROGRAPH DISCHARGE TABLE Cont'd

TIME hrs	INFLOW (i) cfs	INFLOW (j) cfs	2S/dt-O (i) cfs	2S/dt+O (j) cfs	OUTFLOW cfs
16.00	3.12	3.09	4203.68	4213.70	5.01
16.03	3.09	3.06	4199.88	4209.90	5.01
16.07	3.06	3.04	4196.02	4206.04	5.01
16.10	3.04	3.01	4192.11	4202.13	5.01
16.13	3.01	2.98	4188.14	4198.16	5.01
16.17	2.98	2.96	4184.12	4194.14	5.01
16.20	2.96	2.94	4180.06	4190.07	5.01
16.23	2.94	2.92	4175.94	4185.95	5.01
16.27	2.92	2.90	4171.79	4181.80	5.01
16.30	2.90	2.88	4167.59	4177.60	5.01
16.33	2.88	2.87	4163.37	4173.38	5.00
16.37	2.87	2.85	4159.11	4169.11	5.00
16.40	2.85	2.84	4154.82	4164.82	5.00
16.43	2.84	2.83	4150.50	4160.51	5.00
16.47	2.83	2.81	4146.16	4156.17	5.00
16.50	2.81	2.80	4141.79	4151.80	5.00
16.53	2.80	2.79	4137.41	4147.41	5.00
16.57	2.79	2.78	4133.00	4143.00	5.00
16.60	2.78	2.77	4128.57	4138.58	5.00
16.63	2.77	2.76	4124.13	4134.13	5.00
16.67	2.76	2.75	4119.66	4129.66	5.00
16.70	2.75	2.74	4115.17	4125.17	5.00
16.73	2.74	2.73	4110.66	4120.66	5.00
16.77	2.73	2.72	4106.14	4116.13	5.00
16.80	2.72	2.71	4101.59	4111.59	5.00
16.83	2.71	2.70	4097.02	4107.02	5.00
16.87	2.70	2.69	4092.43	4102.43	5.00
16.90	2.69	2.68	4087.83	4097.82	5.00
16.93	2.68	2.67	4083.20	4093.20	5.00
16.97	2.67	2.66	4078.55	4088.55	5.00
17.00	2.66	2.65	4073.89	4083.88	5.00
17.03	2.65	2.64	4069.20	4079.19	5.00
17.07	2.64	2.63	4064.50	4074.49	5.00
17.10	2.63	2.62	4059.77	4069.76	4.99
17.13	2.62	2.61	4055.02	4065.01	4.99
17.17	2.61	2.60	4050.26	4060.25	4.99
17.20	2.60	2.58	4045.47	4055.46	4.99
17.23	2.58	2.57	4040.67	4050.65	4.99
17.27	2.57	2.56	4035.84	4045.83	4.99
17.30	2.56	2.55	4031.00	4040.98	4.99
17.33	2.55	2.54	4026.13	4036.11	4.99
17.37	2.54	2.53	4021.25	4031.23	4.99

HYDROGRAPH DISCHARGE TABLE Cont'd

TIME hrs	INFLOW (i) cfs	INFLOW (j) cfs	2S/dt-O (i) cfs	2S/dt+O (j) cfs	OUTFLOW cfs
17.40	2.53	2.52	4016.34	4026.32	4.99
17.43	2.52	2.51	4011.42	4021.40	4.99
17.47	2.51	2.50	4006.47	4016.45	4.99
17.50	2.50	2.49	4001.51	4011.49	4.99
17.53	2.49	2.48	3996.52	4006.50	4.99
17.57	2.48	2.47	3991.52	4001.49	4.99
17.60	2.47	2.46	3986.49	3996.47	4.99
17.63	2.46	2.45	3981.45	3991.42	4.99
17.67	2.45	2.44	3976.39	3986.36	4.99
17.70	2.44	2.43	3971.30	3981.28	4.99
17.73	2.43	2.42	3966.20	3976.17	4.99
17.77	2.42	2.41	3961.08	3971.05	4.99
17.80	2.41	2.40	3955.93	3965.90	4.98
17.83	2.40	2.39	3950.77	3960.74	4.98
17.87	2.39	2.38	3945.59	3955.56	4.98
17.90	2.38	2.37	3940.39	3950.35	4.98
17.93	2.37	2.36	3935.16	3945.13	4.98
17.97	2.36	2.35	3929.92	3939.89	4.98
18.00	2.35	2.34	3924.66	3934.62	4.98
18.03	2.34	2.32	3919.38	3929.34	4.98
18.07	2.32	2.31	3914.08	3924.04	4.98
18.10	2.31	2.30	3908.75	3918.72	4.98
18.13	2.30	2.29	3903.41	3913.37	4.98
18.17	2.29	2.28	3898.05	3908.01	4.98
18.20	2.28	2.27	3892.67	3902.63	4.98
18.23	2.27	2.26	3887.27	3897.23	4.98
18.27	2.26	2.25	3881.85	3891.81	4.98
18.30	2.25	2.24	3876.41	3886.36	4.98
18.33	2.24	2.23	3870.95	3880.90	4.98
18.37	2.23	2.22	3865.47	3875.42	4.98
18.40	2.22	2.21	3859.97	3869.92	4.98
18.43	2.21	2.20	3854.45	3864.40	4.98
18.47	2.20	2.19	3848.91	3858.86	4.97
18.50	2.19	2.18	3843.35	3853.30	4.97
18.53	2.18	2.17	3837.77	3847.72	4.97
18.57	2.17	2.16	3832.18	3842.12	4.97
18.60	2.16	2.15	3826.56	3836.50	4.97
18.63	2.15	2.14	3820.92	3830.86	4.97
18.67	2.14	2.13	3815.26	3825.21	4.97
18.70	2.13	2.12	3809.58	3819.53	4.97
18.73	2.12	2.11	3803.89	3813.83	4.97
18.77	2.11	2.10	3798.17	3808.11	4.97

HYDROGRAPH DISCHARGE TABLE Cont'd

TIME hrs	INFLOW (i) cfs	INFLOW (j) cfs	2S/dt-O (i) cfs	2S/dt+O (j) cfs	OUTFLOW cfs
18.80	2.10	2.09	3792.43	3802.37	4.97
18.83	2.09	2.07	3786.68	3796.61	4.97
18.87	2.07	2.06	3780.90	3790.84	4.97
18.90	2.06	2.05	3775.11	3785.04	4.97
18.93	2.05	2.04	3769.29	3779.22	4.97
18.97	2.04	2.03	3763.45	3773.39	4.97
19.00	2.03	2.02	3757.60	3767.53	4.97
19.03	2.02	2.01	3751.72	3761.65	4.97
19.07	2.01	2.00	3745.83	3755.76	4.96
19.10	2.00	1.99	3739.91	3749.84	4.96
19.13	1.99	1.98	3733.98	3743.91	4.96
19.17	1.98	1.97	3728.03	3737.95	4.96
19.20	1.97	1.96	3722.05	3731.98	4.96
19.23	1.96	1.95	3716.06	3725.98	4.96
19.27	1.95	1.94	3710.05	3719.97	4.96
19.30	1.94	1.93	3704.01	3713.93	4.96
19.33	1.93	1.92	3697.96	3707.88	4.96
19.37	1.92	1.91	3691.89	3701.81	4.96
19.40	1.91	1.90	3685.80	3695.71	4.96
19.43	1.90	1.89	3679.68	3689.60	4.96
19.47	1.89	1.88	3673.55	3683.47	4.96
19.50	1.88	1.87	3667.40	3677.32	4.96
19.53	1.87	1.86	3661.23	3671.14	4.96
19.57	1.86	1.85	3655.04	3664.95	4.96
19.60	1.85	1.83	3648.83	3658.74	4.96
19.63	1.83	1.82	3642.60	3652.51	4.95
19.67	1.82	1.81	3636.35	3646.26	4.95
19.70	1.81	1.80	3630.08	3639.99	4.95
19.73	1.80	1.79	3623.79	3633.70	4.95
19.77	1.79	1.78	3617.48	3627.39	4.95
19.80	1.78	1.77	3611.15	3621.06	4.95
19.83	1.77	1.76	3604.81	3614.71	4.95
19.87	1.76	1.75	3598.44	3608.34	4.95
19.90	1.75	1.74	3592.05	3601.95	4.95
19.93	1.74	1.73	3585.64	3595.54	4.95
19.97	1.73	1.72	3579.22	3589.11	4.95
20.00	1.72	1.71	3572.77	3582.67	4.95
20.03	1.71	1.70	3566.30	3576.20	4.95
20.07	1.70	1.69	3559.82	3569.71	4.95
20.10	1.69	1.68	3553.31	3563.21	4.95
20.13	1.68	1.67	3546.79	3556.68	4.95
20.17	1.67	1.66	3540.25	3550.14	4.95

HYDROGRAPH DISCHARGE TABLE Cont'd

TIME hrs	INFLOW (i) cfs	INFLOW (j) cfs	2S/dt-O (i) cfs	2S/dt+O (j) cfs	OUTFLOW cfs
20.20	1.66	1.66	3533.70	3543.59	4.94
20.23	1.66	1.65	3527.13	3537.02	4.94
20.27	1.65	1.64	3520.55	3530.43	4.94
20.30	1.64	1.64	3513.95	3523.84	4.94
20.33	1.64	1.63	3507.35	3517.24	4.94
20.37	1.63	1.63	3500.74	3510.62	4.94
20.40	1.63	1.63	3494.12	3504.00	4.94
20.43	1.63	1.62	3487.50	3497.38	4.94
20.47	1.62	1.62	3480.87	3490.75	4.94
20.50	1.62	1.62	3474.24	3484.11	4.94
20.53	1.62	1.62	3467.60	3477.48	4.94
20.57	1.62	1.61	3460.96	3470.83	4.94
20.60	1.61	1.61	3454.32	3464.19	4.94
20.63	1.61	1.61	3447.67	3457.54	4.94
20.67	1.61	1.61	3441.02	3450.89	4.94
20.70	1.61	1.61	3434.37	3444.24	4.93
20.73	1.61	1.60	3427.71	3437.58	4.93
20.77	1.60	1.60	3421.06	3430.92	4.93
20.80	1.60	1.60	3414.39	3424.26	4.93
20.83	1.60	1.60	3407.73	3417.60	4.93
20.87	1.60	1.60	3401.06	3410.93	4.93
20.90	1.60	1.59	3394.40	3404.26	4.93
20.93	1.59	1.59	3387.72	3397.58	4.93
20.97	1.59	1.59	3381.05	3390.91	4.93
21.00	1.59	1.59	3374.37	3384.23	4.93
21.03	1.59	1.58	3367.69	3377.55	4.93
21.07	1.58	1.58	3361.01	3370.86	4.93
21.10	1.58	1.58	3354.32	3364.17	4.93
21.13	1.58	1.58	3347.63	3357.48	4.93
21.17	1.58	1.58	3340.94	3350.79	4.93
21.20	1.58	1.57	3334.24	3344.09	4.93
21.23	1.57	1.57	3327.54	3337.39	4.92
21.27	1.57	1.57	3320.84	3330.69	4.92
21.30	1.57	1.57	3314.14	3323.99	4.92
21.33	1.57	1.57	3307.43	3317.28	4.92
21.37	1.57	1.56	3300.72	3310.57	4.92
21.40	1.56	1.56	3294.01	3303.85	4.92
21.43	1.56	1.56	3287.30	3297.14	4.92
21.47	1.56	1.56	3280.58	3290.42	4.92
21.50	1.56	1.56	3273.86	3283.70	4.92
21.53	1.56	1.55	3267.13	3276.97	4.92
21.57	1.55	1.55	3260.41	3270.24	4.92

HYDROGRAPH DISCHARGE TABLE Cont'd

TIME hrs	INFLOW (i) cfs	INFLOW (j) cfs	2S/dt-O (i) cfs	2S/dt+O (j) cfs	OUTFLOW cfs
21.60	1.55	1.55	3253.68	3263.51	4.92
21.63	1.55	1.55	3246.95	3256.78	4.92
21.67	1.55	1.55	3240.21	3250.04	4.92
21.70	1.55	1.54	3233.47	3243.30	4.92
21.73	1.54	1.54	3226.73	3236.56	4.91
21.77	1.54	1.54	3219.99	3229.82	4.91
21.80	1.54	1.54	3213.24	3223.07	4.91
21.83	1.54	1.54	3206.49	3216.32	4.91
21.87	1.54	1.53	3199.74	3209.57	4.91
21.90	1.53	1.53	3192.99	3202.81	4.91
21.93	1.53	1.53	3186.23	3196.05	4.91
21.97	1.53	1.53	3179.47	3189.29	4.91
22.00	1.53	1.52	3172.70	3182.52	4.91
22.03	1.52	1.52	3165.94	3175.76	4.91
22.07	1.52	1.52	3159.17	3168.99	4.91
22.10	1.52	1.52	3152.40	3162.21	4.91
22.13	1.52	1.52	3145.62	3155.44	4.91
22.17	1.52	1.51	3138.84	3148.66	4.91
22.20	1.51	1.51	3132.06	3141.88	4.91
22.23	1.51	1.51	3125.28	3135.09	4.90
22.27	1.51	1.51	3118.49	3128.30	4.90
22.30	1.51	1.51	3111.71	3121.51	4.90
22.33	1.51	1.50	3104.91	3114.72	4.90
22.37	1.50	1.50	3098.12	3107.92	4.90
22.40	1.50	1.50	3091.32	3101.13	4.90
22.43	1.50	1.50	3084.52	3094.32	4.90
22.47	1.50	1.50	3077.72	3087.52	4.90
22.50	1.50	1.49	3070.91	3080.71	4.90
22.53	1.49	1.49	3064.10	3073.90	4.90
22.57	1.49	1.49	3057.29	3067.09	4.90
22.60	1.49	1.49	3050.48	3060.27	4.90
22.63	1.49	1.49	3043.66	3053.45	4.90
22.67	1.49	1.48	3036.84	3046.63	4.90
22.70	1.48	1.48	3030.02	3039.81	4.90
22.73	1.48	1.48	3023.19	3032.98	4.90
22.77	1.48	1.48	3016.36	3026.15	4.89
22.80	1.48	1.47	3009.53	3019.32	4.89
22.83	1.47	1.47	3002.70	3012.48	4.89
22.87	1.47	1.47	2995.86	3005.64	4.89
22.90	1.47	1.47	2989.02	2998.80	4.89
22.93	1.47	1.47	2982.18	2991.96	4.89
22.97	1.47	1.46	2975.33	2985.11	4.89

HYDROGRAPH DISCHARGE TABLE Cont'd

TIME hrs	INFLOW (i) cfs	INFLOW (j) cfs	2S/dt-O (i) cfs	2S/dt+O (j) cfs	OUTFLOW cfs
23.00	1.46	1.46	2968.48	2978.26	4.89
23.03	1.46	1.46	2961.63	2971.41	4.89
23.07	1.46	1.46	2954.78	2964.55	4.89
23.10	1.46	1.46	2947.92	2957.69	4.89
23.13	1.46	1.45	2941.06	2950.83	4.89
23.17	1.45	1.45	2934.20	2943.97	4.89
23.20	1.45	1.45	2927.33	2937.10	4.89
23.23	1.45	1.45	2920.46	2930.23	4.89
23.27	1.45	1.45	2913.59	2923.36	4.88
23.30	1.45	1.44	2906.72	2916.49	4.88
23.33	1.44	1.44	2899.84	2909.61	4.88
23.37	1.44	1.44	2892.96	2902.73	4.88
23.40	1.44	1.44	2886.08	2895.84	4.88
23.43	1.44	1.44	2879.19	2888.96	4.88
23.47	1.44	1.43	2872.31	2882.07	4.88
23.50	1.43	1.43	2865.41	2875.17	4.88
23.53	1.43	1.43	2858.52	2868.28	4.88
23.57	1.43	1.43	2851.62	2861.38	4.88
23.60	1.43	1.42	2844.73	2854.48	4.88
23.63	1.42	1.42	2837.82	2847.58	4.88
23.67	1.42	1.42	2830.92	2840.67	4.88
23.70	1.42	1.42	2824.01	2833.76	4.88
23.73	1.42	1.42	2817.10	2826.85	4.87
23.77	1.42	1.41	2810.19	2819.93	4.87
23.80	1.41	1.41	2803.27	2813.02	4.87
23.83	1.41	1.41	2796.35	2806.10	4.87
23.87	1.41	1.41	2789.43	2799.17	4.87
23.90	1.41	1.41	2782.51	2792.25	4.87
23.93	1.41	1.40	2775.58	2785.32	4.87
23.97	1.40	0.00	2768.65	2778.39	4.87
24.00	0.00	0.00	2760.31	2770.05	4.87

Maximum outflow (cfs) = 5.02
Maximum storage (cu ft) = 259668
Maximum elevation (ft) = 26.51

D.H.W.

GOVERNOR'S LAND
BAY 5, POD 2
POND B.

SUMMARY

THE POST DEVELOPMENT RUNOFF OF THE WATERSHED FOR POND B IS SUMMARIZED THROUGH THE FOLLOWING STATISTICS:

STORM TYPE	POND EL.	DISCHARGE FROM POND B
100 YR 24 HR.	26.5	5.02 CFS
10 YR - 24 HR	25.9	4.9 CFS
2 YR - 24 HR	25.5	4.6 CFS

ALTHOUGH THE POST-DEVELOPMENT DISCHARGE EXCEEDS THE PRE-DEVELOPMENT RUNOFF OF 3.5 CFS, BY ABOUT 30%, THE WATERSHED FOR POND B IS APPROXIMATELY 500% LARGER THE THE PRE-DEVELOPMENT WATERSHED

CONSULTING ENGINEERS

5248 Olde Towne Road • Suite 1 • Williamsburg, Virginia 23188
(757) 253-0040 • Fax (757) 220-8994 • E-mail aes@widomaker.com

March 11, 1997

MAR 1997
RECEIVED
CODE COMPLIANCE
OFFICE

Mr. Darryl E. Cook, P.E.
Environmental Director
James City County Environmental Division
P.O. Box 8784
Williamsburg, Virginia 23187-8784

RE: Governor's Land at Two Rivers
Hearthstone, Kitchum's Pond, Planter's Round
Letter of Credit Reduction
AES Job No. 7173-5-2

Dear Mr. Cook:

Attached are two copies of as-built drawings for stormwater management structures in the Hearthstone, Kitchum's Pond, Planter's Round subdivisions of Governor's Land. The outstanding Letter of Credit, S930114, is currently in the amount of $76,000.

Please note that the water level of Bennett's Pond is elevated due to a blockage at the Wingfield Lake riser structure. The maintenance staff at Governor's Land are trying to correct the situation.

With this information, please consider either substantial reduction, or relaese, of the Letter of Credit for this project.

Should you have any questions regarding these documents, please do not hesitate to call.

Sincerely,

AES Consulting Engineers

V. Marc Bennett

V. Marc Bennett, P.E.

Attachments

H:\7173\05-2\WORDPROC\DOCUMENTS\GL52L01.VMB

Record Drawing/Construction Certification Submittal for a BMP Facility

Date: Apr/29, 2002

Inspector:
- ☑ Pat Menichino
- ☐ Gerry Lewis
- ☐ Beth Davis
- ☐ Mike Woolson
- ☐ Joe Buchite
- ☐ Other: _____

Project: Governors Land
BMP Facility: Kitchums Pond
Plan No. 5-14-93
BMP ID Code: JR020

I have received a transmittal for a ☑ Record Drawing and ☐ Construction Certification for the above referenced facility on FeB 14 2002. Prior to full engineering review of these items and a field inspection, I am first forwarding the items to you to cursory review in case any major field changes were performed that I should be aware of and/or to ensure the record drawing accurately portrays what you saw in the field. Please review the drawing and return to me promptly so I can proceed with the review for certification purposes.

During my review, I will look at issues related to the BMP and its primary inflow and outflow conveyance systems, and will make comment in the following areas: Record Drawing (RD), Construction Certification (CC) and Construction-Related (CR) punch list items. If you have any other related non-BMP site issues such as erosion, stabilization, removal of erosion & sediment controls, etc. that are not related to the BMP, I can easily add these items to any comment letter that I may forward to the Owner/Engineer. Let me know if any outstanding site issues remain.

If I don't hear from you I will ask you if any other outstanding issues remain before I forward any letters to the Owner/Engineer.

Scott

SWMProg\BMP\ConInsp\Insp.trans

DEVELOPMENT MANAGEMENT

101-E MOUNTS BAY ROAD, P.O. BOX 8784, WILLIAMSBURG, VIRGINIA 23187-8784
(757) 253-6671 Fax: (757) 253-6850 E-MAIL: devtman@james-city.va.us

CODE COMPLIANCE
(757) 253-6626
codecomp@james-city.va.us

ENVIRONMENTAL DIVISION
(757) 253-6670
environ@james-city.va.us

PLANNING
(757) 253-6685
planning@james-city.va.us

COUNTY ENGINEER
(757) 253-6678

INTEGRATED PEST MANAGEMENT
(757) 253-2620

January 24, 2003

Mr. James H. Bennett
Governors Land Associates
9701 Mill Pond Run
Toano, Va. 23168

Re: Governor's Land - Kitchums Pond
County Plan No. S-14-93
Stormwater Management Facility
County BMP ID Code: JR 020

Dear Mr. Bennett:

The Environmental Division has reviewed a record drawing as submitted to our office for the above referenced BMP. The record drawing provides as-built information for a large wet pond BMP facility situated in the eastern portion of Governor's Land.

Based on our review of the project and a concurrent field inspection as performed on January 10th 2003, the following items must be addressed prior to release of the developer's surety instrument for the stormwater management/BMP facility at the site and to proceed with closing out the project:

Construction Certification:

1. Based on a review of the plans and active file for the project, there appears to be no construction certification requirement imposed for this BMP. *(Note: The postconstruction geotechnical report by ECS #6221 dated December 31st 2000 does not appear to include Kitchums Pond).*

Record Drawing:

2. Provide an asbuilt elevation for the bottom of the pond at the upstream toe near the riser to verify that design depth (elevation) was achieved and that excessive sedimentation does not exist in the bottom of the facility. Record drawing Sheet 2, Pond B Section at Principal Spillway, shows a design elevation at the upstream toe of dam and invert of the pond drain at El. 17.5. The upstream toe is approximately 7.5 ft. below normal pool.

Construction - Related Items:

3. Remove small pines from along the bottom portion of the downstream face of the dam and around the outlet end of the barrel through the dam.

Once this work is satisfactorily completed, contact our office appropriately for reinspection. We can then proceed with final release of the surety and/or closing out the project. One reproducible and one blue/black line set of the record drawings will be required once the above items are adequately addressed.

Please contact me at 757-253-6639 or the assigned Environmental Division inspector, Joe Buchite at 757-253-6643 if you have any further comments or questions.

Sincerely,

Scott J. Thomas, P.E.
Civil Engineer
Environmental Division

cc: Marc Bennett, AES - via fax

G:\AsBuilts\S1493.jr020

DEVELOPMENT MANAGEMENT

101-E MOUNTS BAY ROAD, P.O. BOX 8784, WILLIAMSBURG, VIRGINIA 23187-8784
(757) 253-6671 Fax: (757) 253-6850 E-MAIL: devtman@james-city.va.us

CODE COMPLIANCE
(757) 253-6626
codecomp@james-city.va.us

ENVIRONMENTAL DIVISION
(757) 253-6670
environ@james-city.va.us

PLANNING
(757) 253-6685
planning@james-city.va.us

COUNTY ENGINEER
(757) 253-6678

INTEGRATED PEST MANAGEMENT
(757) 253-2620

January 24, 2003

Mr. James H. Bennett
Governors Land Associates
9701 Mill Pond Run
Toano, Va. 23168

Reinspect 6-2-03

Re: Governor's Land - Kitchums Pond
County Plan No. S-14-93
Stormwater Management Facility
County BMP ID Code: JR 020

Dear Mr. Bennett:

The Environmental Division has reviewed a record drawing as submitted to our office for the above referenced BMP. The record drawing provides as-built information for a large wet pond BMP facility situated in the eastern portion of Governor's Land.

Based on our review of the project and a concurrent field inspection as performed on January 10th 2003, the following items must be addressed prior to release of the developer's surety instrument for the stormwater management/BMP facility at the site and to proceed with closing out the project:

Construction Certification:

✓ OK 6-26-03

1. Based on a review of the plans and active file for the project, there appears to be no construction certification requirement imposed for this BMP. *(Note: The postconstruction geotechnical report by ECS #6221 dated December 31st 2000 does not appear to include Kitchums Pond).*

Record Drawing:

✓ OK 6-26-03

(4-5' High, OK)

2. Provide an asbuilt elevation for the bottom of the pond at the upstream toe near the riser to verify that design depth (elevation) was achieved and that excessive sedimentation does not exist in the bottom of the facility. Record drawing Sheet 2, Pond B Section at Principal Spillway, shows a design elevation at the upstream toe of dam and invert of the pond drain at El. ~~17.5~~ 7.5. The upstream toe is approximately 7.5 ft. below normal pool.

Construction - Related Items:

✓ OK 6-2-03

3. Remove small pines from along the bottom portion of the downstream face of the dam and around the outlet end of the barrel through the dam.

Once this work is satisfactorily completed, contact our office appropriately for reinspection. We can then proceed with final release of the surety and/or closing out the project. One reproducible and one blue/black line set of the record drawings will be required once the above items are adequately addressed.

Please contact me at 757-253-6639 or the assigned Environmental Division inspector, Joe Buchite at 757-253-6643 if you have any further comments or questions.

Sincerely,

Scott J. Thomas, P.E.
Civil Engineer
Environmental Division

cc: Marc Bennett, AES - via fax

G:\AsBuilts\S1493.jr020

Memorandum

DATE: **May 13, 2003**

TO: **Scott Thomas**

FROM: **Victoria Bains**

SUBJECT: **Kitchum's Pond, County BMP ID Code: JR020**

In response to your letter dated January 24, 2003 AES Consulting Engineers has taken several actions.

Construction Certification:
No further action required.

Record Drawings:
As-built elevations for the bottom of the pond have been added to plan view on drawings. Based upon this information there appears to be no significant sediment accumulation in this facility.

Construction – Related Items:
Pine saplings along the shoreline and downstream slope have been removed up to adjacent property lines. Grass has been mowed to an acceptable height in the dam area. Outfall has been cleared of any debris, sediment and vegetation and the outlet protection has been improved.

CONSULTING ENGINEERS

5248 Olde Towne Road • Suite 1 • Williamsburg, Virginia 23188
(757) 253-0040 • Fax (757) 220-8994 • E-mail aes@aesva.com

James City County Environmental Division
Stormwater Management / BMP Inspection Report
Detention and Retention Pond Facilities

County BMP ID Code (if known): JR-020

Name of Facility: Kitchums Pond BMP No.: ____ of ____ Date: 1/10/03

Location: Governors Land

Name of Owner: " "

Name of Inspector: Rick Hall

Type of Facility: Wet Pond

Weather Conditions: Sunny - cool Type: ☑ Final Inspection ☐ County BMP Inspection Program ☐ Owner Inspection

If an inspection item is not applicable, mark NA, otherwise mark the appropriate column.

O.K. - The item checked is in adequate condition and the maintenance program is currently satisfactory. No action required.
Routine - The item checked requires attention, but does not present an immediate threat to the function/integrity of the BMP.
Urgent - The item checked requires immediate attention to keep the BMP operational and to prevent damage to the facility.

Provide an explanation and details in the comment column, if routine or urgent are marked.

Facility Item	O.K.	Routine	Urgent	Comments
Embankments and Side Slopes:				
Grass Height	✓			Excited pond ~
Vegetation Condition	✓			
Tree Growth		✓		small pines
Erosion	✓			
Trash & Debris	✓			
Seepage	✓			
Fencing or Benches				
Interior Landscaping/Planted Areas:	☑ None	☐ Constructed Wetland/Shallow Marsh	☐ Naturally Established Vegetation	
Vegetated Conditions	✓			deep pond
Trash & Debris	✓			
Floating Material	✓			
Erosion	✓			
Sediment	✓			
Dead Plant	✓			
Aesthetics	✓			
Other				
Notes:				

Facility Item	O.K.	Routine	Urgent	Comments
Water Pools: ☑ Permanent Pool (Retention Basin) ☐ Shallow Marsh (Detention Basin) ☐ None, Dry (Detention Basin)				
Shoreline Erosion	✓			
Algae	✓			
Trash & Debris	✓			
Sediment	✓			
Aesthetics	✓			
Other				
Inflows (Describe Types/Locations): No inflow pipes				
Condition of Structure				
Erosion				
Trash and Debris				
Sediment				
Outlet Protection				
Other				
Principal Flow Control Structure - Riser, Intake, etc. (Describe Type): Concrete Riser & cap				
Condition of Structure	✓			
Corrosion	✓			
Trash and Debris	✓			
Sediment	✓			
Vegetation	✓			
Other				
Principal Outlet Structure - Barrel, Conduit, etc. : 8" Truss				
Condition of Structure	✓			Small pines thick
Settlement	✓			along last 30 feet
Trash & Debris	✓			and at outlet
Erosion/Sediment	✓			
Outlet Protection	✓			
Other				
Emergency Spillway (Overflow): None				
Vegetation				
Lining				
Erosion				
Trash & Debris				
Other				
Notes:				

Facility Item	O.K.	Routine	Urgent	Comments
Nuisance Type Conditions:				
Mosquito Breeding	✓			
Animal Burrows	✓			
Graffiti	✓			
Other				
Surrounding Perimeter Conditions:				
Land Uses	✓			
Vegetation	✓			
Trash & Debris	✓			
Aesthetics	✓			
Access /Maintenance Roads or Paths			✓	No direct access is provided
Other				

Remarks:

Overall Environmental Division Internal Rating: 4

Signature: [signature] **Date:** 1/10/03

Title: Envir. Specialist

SWMProg\BMP\CoInspProg\DetRet.wpd

James City County Environmental Division
Stormwater Management / BMP Inspection Report
Detention and Retention Pond Facilities

County BMP ID Code (if known): JR 020

Name of Facility: KITCHUM'S POND BMP No.: ____ of ____ Date: 2/24/03

Location: GOVERNOR'S LAND

Name of Owner: DOMINION LAND MANAGEMENT CO.

Name of Inspector: VICTORIA BAINS

Type of Facility: POND

Weather Conditions: CLEAR Type: ☒ Final Inspection ☐ County BMP Inspection Program ☒ Owner Inspection

FEB 2003 RECEIVED

If an inspection item is not applicable, mark NA, otherwise mark the appropriate column.

O.K. - The item checked is in adequate condition and the maintenance program is currently satisfactory. No action required.
Routine - The item checked requires attention, but does not present an immediate threat to the function/integrity of the BMP.
Urgent - The item checked requires immediate attention to keep the BMP operational and to prevent damage to the facility.

Provide an explanation and details in the comment column, if routine or urgent are marked.

Facility Item	O.K.	Routine	Urgent	Comments
Embankments and Side Slopes:				
Grass Height	✓			
Vegetation Condition	✓			
Tree Growth	✓			
Erosion	✓			
Trash & Debris	✓			
Seepage	✓			
Fencing or Benches	N/A			
Interior Landscaping/Planted Areas: ☒ None ☐ Constructed Wetland/Shallow Marsh ☐ Naturally Established Vegetation				
Vegetated Conditions				
Trash & Debris				
Floating Material				
Erosion				
Sediment				
Dead Plant				
Aesthetics				
Other				
Notes:				

Facility Item	O.K.	Routine	Urgent	Comments
Water Pools: ☒ Permanent Pool (Retention Basin) ☐ Shallow Marsh (Detention Basin) ☐ None, Dry (Detention Basin)				
Shoreline Erosion	✓			
Algae	✓			
Trash & Debris	✓			
Sediment	✓			
Aesthetics	✓			
Other				
Inflows (Describe Types/Locations):				
Condition of Structure				
Erosion				
Trash and Debris				
Sediment				
Outlet Protection				
Other				
Principal Flow Control Structure - Riser, Intake, etc. (Describe Type):				
Condition of Structure	✓			
Corrosion	✓			
Trash and Debris	✓			
Sediment	✓			
Vegetation	✓			
Other				
Principal Outlet Structure - Barrel, Conduit, etc. :				
Condition of Structure	✓			
Settlement	✓			
Trash & Debris	✓			
Erosion/Sediment	✓			
Outlet Protection	✓			
Other				
Emergency Spillway (Overflow):				
Vegetation	✓			
Lining	N/A			
Erosion	✓			
Trash & Debris	✓			
Other				
Notes:				

Facility Item	O.K.	Routine	Urgent	Comments
Nuisance Type Conditions:				
Mosquito Breeding	✓			
Animal Burrows	✓			
Graffiti	✓			
Other				
Surrounding Perimeter Conditions:				
Land Uses	✓			
Vegetation	✓			
Trash & Debris	✓			
Aesthetics	✓			
Access /Maintenance Roads or Paths				
Other				

Remarks:

TOP OF DAM HAS BEEN MOWED AND PINE SAPLINGS ALONG SHORELINE HAVE BEEN CUT DOWN AND CHIPPED INTO MULCH. THE PINE SAPLINGS THAT RAN ALONG THE PIPE ALIGNMENT FOR THE OUTFALL PIPE HAVE BEEN CUT DOWN AND CHIPPED INTO MULCH. THE MULCH HAS BEEN SPREAD ~~TO~~ ON THE DOWNSTREAM SIDE OF THE DAM EMBANKMENT TO HELP STABILIZE ANY BARE AREAS.

Overall Environmental Division Internal Rating: 4

Signature: Victoria Bains **Date:** 2/24/03

Title: PROJECT ENGINEER

SWMProg\BMP\CoInspProg\DetRet.wpd

Date Record Created:

Created By:

WS_BMPNO: JR020

Print Record

PRINTED ON
Thursday, March 11, 2010
2:35:20 PM

WATERSHED	JR
BMP ID NO	020
PLAN NO	S-14-93
TAX PARCEL	(44-2)(7-7)
PIN NO	4420700007
CONSTRUCTION DATE	5/1/1993
PROJECT NAME	Governors Land - Kitchums Pond
FACILITY LOCATION	Behind 3009 Kitchums Close
CITY-STATE	Williamsburg, VA
CURRENT OWNER	Governors Land Foundation
OWNER ADDRESS	2700 Two Rivers Road
OWNER ADDRESS 2	
CITY-STATE-ZIP CODE	Williamsburg, VA 23185
OWNER PHONE	
MAINT AGREEMENT	Yes
EMERG ACTION PLAN	No

Get Last BMP No | Return to Menu

MAINTENANCE PLAN	No
SITE AREA acre	1444
LAND USE	SF Residential
old BMP TYP	Wet Pond
JCC BMP CODE	A2 Wet Pond
POINT VALUE	9
SVC DRAIN AREA acres	19.85
SERVICE AREA DESCRI	SF Lots & Roadways
IMPERV AREA acres	0.43
RECV STREAM	UT of James River
EXT DET-WQ-CTRL	Yes
WTR QUAL VOL acre-ft	1.439
CHAN PROT CTRL	No
CHAN PROT VOL acre-ft	0
SW/FLOOD CONTROL	Yes
GEOTECH REPORT	No

CTRL STRUC DESC	RCP Riser
CTRL STRUC SIZE inches	48
OTLT BARRL DESC	PVC Pipe
OTLT BARRL SIZE inch	8
EMERG SPILLWAY	No
DESIGN HW ELEV	26.51
PERM POOL ELEV	24.95
2-YR OUTFLOW cfs	
10-YR OUTFLOW cfs	
REC DRAWING	Yes
CONSTR CERTIF	No
LAST INSP DATE	1/10/2003
Inspected by:	
INTERNAL RATING	4

MISC/COMMENTS

Pond B. No emerg spillway.

Additional Comments: