CERTIFICATE OF AUTHENTICITY

THIS IS TO CERTIFY THAT THE FOLLOWING ELECTRONIC RECORDS ARE TRUE AND ACCURATE REPRODUCTIONS OF THE ORIGINAL RECORDS OF JAMES CITY COUNTY GENERAL SERVICES DEPARTMENT- STORMWATER DIVISION; WERE SCANNED IN THE REGULAR COURSE OF BUSINESS PURSUANT TO GUIDELINES ESTABLISHED BY THE LIBRARY OF VIRGINIA AND ARCHIVES; AND HAVE BEEN VERIFIED IN THE CUSTODY OF THE INDIVIDUAL LISTED BELOW.

BMP NUMBER: **JR039**

DATE VERIFIED: **November 26, 2012**

QUALITY ASSURANCE TECHNICIAN: **Leah Hardenbergh**

Leah Hardenbergh

LOCATION: WILLIAMSBURG, VIRGINIA

Stormwater Division

MEMORANDUM

Date: March 28, 2012

To: Michael J. Gillis, Virginia Correctional Enterprises Document Management Services

From: Leah Hardenbergh

PO: 110426

Re: Files Approved for Scanning

General File ID or BMP ID:	**JR039**
PIN:	**5040100001**
Owner Name (if known):	**XANTERRA KINGSMILL LLC**
Legal Property Description:	**PT KINGSMILL; CELL TOWER ADDRESS=300 FRANCES THACKER**
Site Address:	**1000 KINGSMILL ROAD**

(For internal use only):

Box # 2

Agreements (in file as of scan date): Y **Book or Doc #: 990012932**
DB 145, p 32

JR-~~039~~ ~~060~~
039

Contents for Stormwater Management Facilities As-built Files

Each file is to contain:

1. As-built plan
2. Completed construction certification
3. Construction Plan
4. Design Calculations
5. Watershed Map
6. Maintenance Agreement
7. Correspondence with owners
8. Inspection Records
9. Enforcement Actions

JR039
JR ~~039~~ ~~060~~
Busch – Kingsmill Marina

990012932

DECLARATION OF COVENANTS

INSPECTION/MAINTENANCE OF DRAINAGE SYSTEM

THIS DECLARATION, made this 9th 10th day of June, 1999, between Kingsmill Resort, and all successors in interest, hereinafter referred to as the "COVENANTOR(S)," owner(s) of the following property: Kingsmill Marina, 1000 Kingsmill Road, Williamsburg, VA, Tax Map/Parcel No. ~~46-27~~ (50-4) (1-1) Deed of Correction, 5/4/73, Deed Book 145, Page No. 32 or Instrument No. _____, and James City County, Virginia, hereinafter referred to as the "COUNTY."

WITNESSETH:

We, the COVENANTOR(S), with full authority to execute deeds, mortgages, other covenants, and all rights, titles and interests in the property described above, do hereby covenant with the COUNTY as follows:

1. The COVENANTOR(S) shall provide maintenance for the drainage system including any runoff control facilities, conveyance systems and associated easements, hereinafter referred to as the "SYSTEM," located on and serving the above-described property to ensure that the SYSTEM is and remains in proper working condition in accordance with approved design standards, and with the law and applicable executive regulations. The SYSTEM shall not include any elements located within any Virginia Department of Transportation rights-of-way.

2. If necessary, the COVENANTOR(S) shall levy regular or special assessments against all present or subsequent owners of property served by the SYSTEM to ensure that the SYSTEM is properly maintained.

3. The COVENANTOR(S) shall provide and maintain perpetual access from public right-of-ways to the SYSTEM for the COUNTY, its agent and its contractor.

4. The COVENANTOR(S) shall grant the COUNTY, its agent and its contractor a right of entry to the SYSTEM for the purpose of inspecting, operating, installing, constructing, reconstructing, maintaining or repairing the SYSTEM.

5. If, after reasonable notice by the COUNTY, the COVENANTOR(S) shall fail to maintain the SYSTEM in accordance with the approved design standards and with the law and applicable executive regulations, the COUNTY may perform all necessary repair or maintenance work, and the COUNTY may assess the COVENANTOR(S) and/or all property served by the SYSTEM for the cost of the work and any applicable penalties.

6. The COVENANTOR(S) shall indemnify and save the COUNTY harmless from any and all claims for damages to persons or property arising from the installation, construction, maintenance, repair, operation or use of the SYSTEM.

7. The COVENANTOR(s) shall promptly notify the COUNTY when the COVENANTOR(S) legally transfers any of the COVENANTOR(S)' responsibilities for the SYSTEM. The COVENANTOR(S)' shall supply the COUNTY with a copy of any document of transfer, executed by both parties.

8. The covenants contained herein shall run with the land and shall bind the COVENANTOR(S) and the COVENANTOR(S)' heirs, executors, administrators, successors and assignees, and shall bind all present and subsequent owners of property served by the SYSTEM.

9. This COVENANT shall be recorded in the County Land Records.

JUN 17 99 0099

IN WITNESS WHEREOF, the COVENANTOR(S) have executed this DECLARATION OF COVENANTS as of this 10th day of June, 1999.

COVENANTOR(S)
Busch Properties Inc.
Kingsmill Resort

ATTEST:

Matt Delmard
Director of Engineering

COVENANTOR(S)

Terri Haack
Terri Haack
Executive Vice President
and Managing Director

ATTEST:

Jesse Young
JESSE YOUNG
DIRECTOR OF OWNER RELATIONS AND PROJECT ADMIN

COMMONWEALTH OF VIRGINIA
CITY/COUNTY OF James City

I hereby certify that on this 10 day of June, 1999, before the subscribed, a Notary Public of the State of Virginia, and for the County of James City, aforesaid personally appeared Terri Haack and did acknowledge the aforegoing instrument to be their Act.

IN WITNESS WHEREOF, I have hereunto set my hand and official seal this 10 day of June, 1999.

Allison M Hayes
Notary Public

My Commission expires: My Commission Expires April 30, 2002

Approved as to form:

Leo P. Rogers
Deputy County Attorney

This Declaration of Covenants prepared by:

Terri A. Haack
(Print Name)
Executive Vice President
and Managing Director
(Title)
Kingsmill Resort
1010 Kingsmill Road
(Address)
Williamsburg, VA 23185
(City) (State) (Zip)

VIRGINIA: City of Williamsburg and County of James City, to Wit:
In the Clerk's Office of the Circuit Court for the City of Williamsburg and County of James City this 17 day of June, 1999 this Covenants was presented with the certificate annexed and admitted to record at 9:19 o'clock.
Teste Helene S. Ward, Clerk
By _____
Deputy Clerk

JUN 17 9 01 00

drainage.pre
Revised 2/97

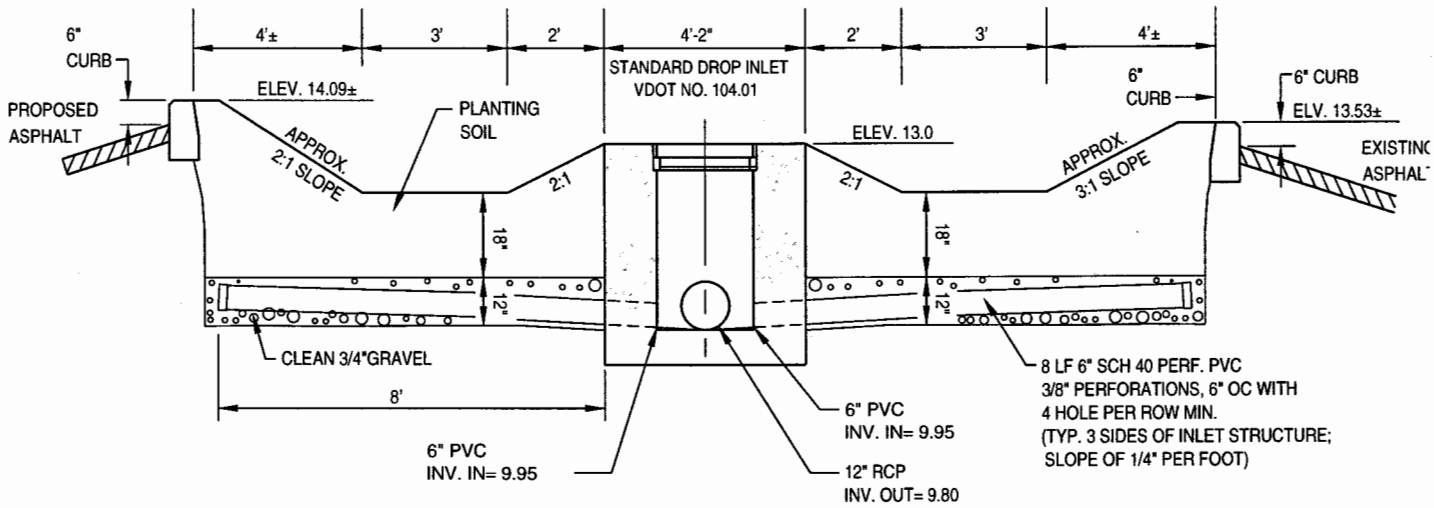

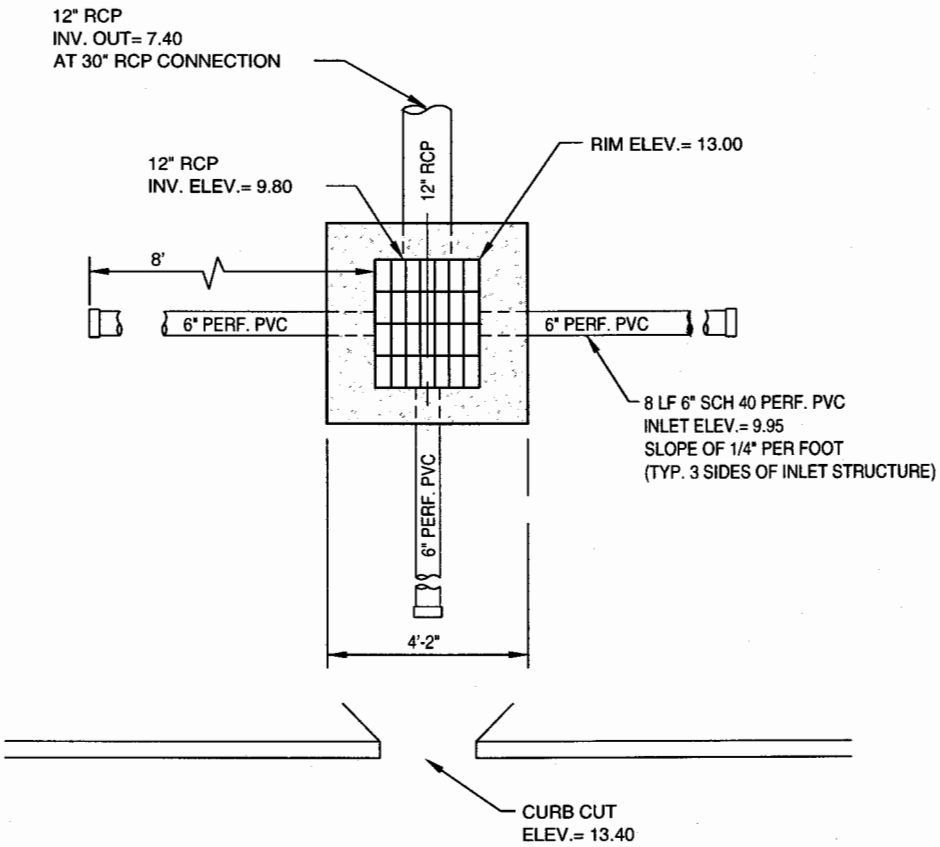

SCALE: 1/4" = 1'-0"

Timothy J. Hogan, P.E.

8-16-99
Date

Vanasse Hangen Brustlin, Inc.

Cross Section A-A (As-Built)

Kingsmill Marina
Improvement Project
James City County, Virginia

As-Built
SP-87-99
JR 039
sheet 1 of 3

30699GDET.dwg

JR039_BUSCH_KINGSMILL_MARINA_CELL_TOWER - 006

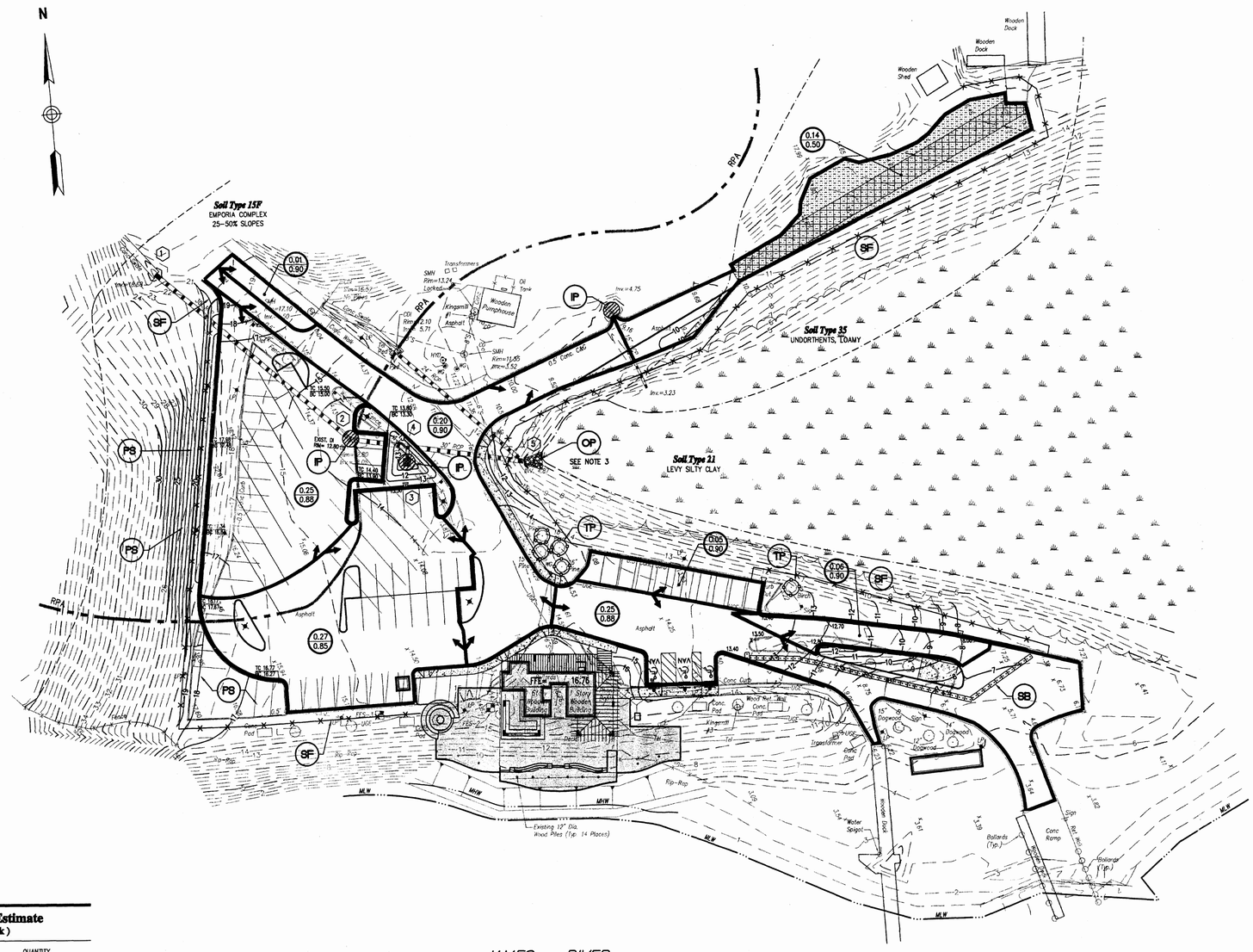

Erosion Control Bond Estimate
(Demolition and Sitework)

ITEM	UNIT	QUANTITY
TOTAL LAND DISTURBANCE	AC.	0.8550
PERMANENT SEEDING	AC.	0.27
SILT FENCE	L.F.	755
EXISTING INLET PROTECTION	EACH	2
EXISTING OUTLET PROTECTION	EACH	1
TREE PROTECTION	EACH	5

VHB

Vanasse Hangen Brustlin, Inc.
Transportation
Land Development
Environmental Services
477 McLaws Circle; Suite 1
Williamsburg, Virginia 23185
757 220 0500 • FAX 757 220 8544

Jeff Stodghill
Architect
PMA
PLANNERS AND ARCHITECTS
10227 Warwick Boulevard Newport News Virginia 23601
Telephone (757) 596-8200 Facsimile (757) 595-0598

LEGEND

- SF — SILT FENCE
- SB — STRAW BALE BARRIER
- IP — STORM DRAIN INLET PROTECTION
- OP — OUTLET PROTECTION
- PS — PERMENANT SEEDING
- TP — TREE PROTECTION
- 5 — DRAINAGE COMPONENT SEE PROFILE SHEET C-11
- 0.34 / 0.80 — DRAINAGE AREA / RUNOFF COEFFICIENT

1. REFER TO SHEET C-2 FOR EROSION CONTROL NOTES
2. REFER TO SHEET C-10 FOR EROSION CONTROL DETAILS
3. PLACE APPROX. 19.6 CY OF CLASS 1A RIPRAP AT OUTFALL. DIMENSIONS ARE 7.5' WIDTH AT OUTFALL AND EXTENDING 22'. FINAL WIDTH OF RIPRAP IS TO BE 24.5'.

No.	Revision	Date	Approved
1	REVISED FOR FINAL APPROVAL	6/3/99	TH

Designed by | Drawn by | Checked by
CAD checked by | Approved by
Scale 1"= 30' | Date May 7, 1999

Project Title
Kingsmill Marina Improvement Project

James City County, Virginia

Issued for
Plan Of Development Approval

Drawing Title
Erosion and Sediment Control Plan

Drawing Number
C-9

Sheet 9 of 11

VHBCad File Name 30699es
Project Number 30699.26

COMMONWEALTH OF VIRGINIA
JEFFREY A. BUSCH
NO. 022553
10-13-99

As-Built SP-87-99
JR 039 Sheet 2 of 3

JR039_BUSCH_KINGSMILL_MARINA_CELL_TOWER - 007

Project Description And Schedule

VANASSE HANGEN BRUSTLIN, INC. (VHB) HAS BEEN RETAINED BY KINGSMILL RESORT TO PREPARE AN EROSION AND SEDIMENT CONTROL PLAN FOR THE KINGSMILL MARINA IMPROVEMENT PROJECT. THE SITE IS THE PREVIOUSLY DEVELOPED +/- 4-ACRE SITE LOCATED ON THE KINGSMILL RESORT PROPERTY. THE PROJECT WILL INCLUDE THE DEMOLITION OF A PORTION OF THE EXISTING PARKING LOT ASPHALT AND CONCRETE CURBING.

Objective Of The Erosion And Sediment Control Plan

THE OBJECTIVE OF THIS EROSION AND SEDIMENT CONTROL PLAN IS TO ESTABLISH SPECIFIC GUIDELINES FOR CONTROLLING SOIL EROSION AND SEDIMENTATION DURING AND AFTER THE CONSTRUCTION OF THE MARINA IMPROVEMENTS. MORE OVER, THIS PLAN WILL SPECIFY THE CONTROL MEASURES THAT WILL BE EMPLOYED TO PROVIDE A PRACTICAL AND WORKABLE MEANS OF MINIMIZING DETRIMENTAL IMPACTS TO SOILS AND WATER RESOURCES BECAUSE OF THE CONSTRUCTION ACTIVITIES. ACCORDANCE WITH THE VIRGINIA EROSION AND SEDIMENT CONTROL HANDBOOK, THIRD EDITION, 1992.

Existing Conditions

General Description

THE PROJECT IS LOCATED AT THE EXISTING KINGSMILL MARINA. THE PROPERTY IS CURRENTLY DEVELOPED. THE MAJORITY OF THE SITE IS COVERED BY PERVIOUS SURFACES. THE SITE IS BOUNDED TO THE NORTH, EAST AND WEST BY KINGSMILL PROPERTY AND TO THE SOUTH BY THE JAMES RIVER. THE PROPERTY HAS A HIGH ELEVATION OF APPROXIMATELY 45' AT THE WEST EDGE OF THE SITE AND A LOW ELEVATION OF 0'.

Drainage

THE SITE AND THE SURROUNDING AREA IS CURRENTLY DRAINING TO A WETLAND AREA CURRENTLY LOCATED WITHIN THE SITE. THERE ARE NO PERENNIAL STREAMS ON THE SITE AND WETLANDS ARE LIMITED TO THE AREA DIPICTED ON THE SITE PLAN.

General Description Of Construction Activities And Erosion And Sediment Control Measures

Clearing And Grubbing

SINCE THE SITE IS AN OPERATIONAL MARINA FACILITY, CLEARING OF VEGETATION WILL BE KEPT TO A MINIMUM AND CONFINED TO THE LIMITS OF THE GRADING. MATERIAL CLEARED FROM THE WORK AREA SHALL BE REMOVED FROM THE SITE AND DISPOSED OF IN ACCORDANCE WITH ALL APPLICABLE STATE, LOCAL AND FEDERAL REGULATIONS.

Fueling Operations

TO REDUCE THE PROBABILITY OF FUEL SPILLS INTO SENSITIVE AREAS, ALL DISPENSING FACILITIES, IF LOCATED ON THE PROJECT SITE, WILL BE MANNED BY ATTENDANTS WHO ARE TRAINED IN SPILL PREVENTION AND CLEANUP PROCEDURES. APPROPRIATE POLLUTION CONTROL EQUIPMENT, SUCH AS OIL SPILL BOOMS AND ABSORBENT DIAPERS, WILL BE AVAILABLE AT OR NEAR THE DISPENSING AREAS. ANY REFUELING AND STORAGE OF HAZARDOUS MATERIALS, CHEMICALS, FUELS, AND LUBRICANT OILS WILL BE CONDUCTED IN FLAT OPEN AREAS TO REDUCE THE RISK OF SPILLAGE. REFUELING AND STORAGE OF HAZARDOUS MATERIALS WILL NOT OCCUR ON SLOPES OR WITHIN 100 FEET OF STREAM BANKS.

Final Site Cleanup

ALL TEMPORARY EROSION AND SEDIMENT CONTROL MEASURES WILL BE REMOVED ONLY WHEN ALL PREVIOUSLY DENUDED AREAS PROTECTED BY THE DEVICES HAVE BECOME STABILIZED. THE STONE AND/OR ROCK USED AT CONSTRUCTION ENTRANCES AND ANY OTHER LOCATION AND ANY OTHER LOCATION ON THE SITE WILL BE REMOVED AND DISPOSED OF IN THE APPROPRIATE MANNER. THE SILT FENCES AND/OR STRAW BALES USED ALONG THE LIMITS OF CLEARING AND ROUGH GRADING WILL BE REMOVED IF VEGETATIVE COVER AND SLOPE STABILITY HAVE BEEN ATTAINED.

Construction Phase I - (Initial Conditions)

THE FOLLOWING OUTLINES THE GENERAL CONSTRUCTION SEQUENCE THAT WILL BE EMPLOYED PRIOR TO INSTALLATION OF THE STORMSEWER SYSTEM AND WILL PROVIDE EROSION CONTROL FOR THE INITIAL DEMOLITION AND CLEARING OPERATIONS:

1. THE SITE WORK CONTRACTOR SHALL GIVE TO THE COUNTY ENVIRONMENTAL ENGINEER OR INSPECTOR 48 HOURS NOTIFICATION TO SCHEDULE AN ON-SITE PRE-CONSTRUCTION MEETING PRIOR TO THE BEGINNING OF CONSTRUCTION. DELINEATE LIMITS OF CLEARING PRIOR TO THE PRE-CONSTRUCTION MEETING.
2. ALL HARD SURFACES WILL BE CLEARED AND PARKING AREAS WILL BE DEMOLISHED AND REMOVED FROM THE SITE. DELINEATE LIMITS OF CLEARING PRIOR TO THE PRE-CONSTRUCTION MEETING.
3. PRIOR TO ANY LAND OR VEGETATION DISTURBING ACTIVITY, THE LOCATION OF THE TREE PROTECTION FENCE SHALL BE DELINEATED AND INSTALLED. FENCING AND SIGN SHALL BE ERECTED.
4. ERECT SILT FENCING ALONG THE LIMITS OF CLEARING AS SPECIFIED IN THE EROSION AND SEDIMENT CONTROL PLANS AND DRAWINGS.
5. INSTALL INLET AND OUTLET PROTECTION, SILT FENCING AND DIVERSION DIKES AS AREAS DRAINING TO THEM BECOME IMPACTED.
6. REFER TO CONSTRUCTION STAGE II BELOW FOR EROSION CONTROL DURING SITE CONSTRUCTION.

Construction Phase II - (Proposed Conditions)

THE FOLLOWING OUTLINES THE GENERAL CONSTRUCTION SEQUENCE THAT WILL BE EMPLOYED DURING THE SITE CONSTRUCTION PHASE:

1. PRIOR TO BEGINNING ANY SITE CONSTRUCTION THE CONTRACTOR SHALL INSTALL SILT FENCING, DIVERSION DIKES, INLET PROTECTION AT EXISTING STRUCTURES AS SHOWN ON THE EROSION CONTROL PLAN. ANY EXISTING EROSION CONTROL MEASURES PROPOSED FOR USE HEREON SHALL BE CLEANED/REPLACED AS NECESSARY IN ACCORDANCE WITH STANDARD EROSION CONTROL PRACTICES OR AT THE REQUEST OF COUNTY OFFICIALS.
2. BEGIN CURB AND GUTTER INSTALLATION. CONSTRUCT BIO-RETENTION SYSTEM INCLUDING NEW INLET STRUCTURE AND PERFORATED PIPE.
3. INSTALL INLET PROTECTION AT NEW BIO-RETENTION AREA INLET PRIOR TO OPENING OF SYSTEM TO FLOW.
4. COMPLETE CURBING AROUND BIO-RETENTION AREA AND INCLUDE A TEMPORARY CURB SECTION AT THE LOCATION OF THE CURB CUT TO PREVENT RUN-OFF FROM THE UNSTABILIZED AREAS TO ENTER BIO-RETENTION AREA.
5. ALL BUILDING WORK WILL BE UNDERTAKEN AT THIS STAGE OF THE CONSTRUCTION PROGRAM.
6. UPON COMPLETION OF ALL PAVING AND FINE GRADING OPERATIONS PERMANENTLY SEED ALL SLOPES AND LAWN AREAS. APPLY MULCH AS SPECIFIED ON THESE PLANS.
7. WITH THE APPROVAL OF THE COUNTY ENVIRONMENTAL ENGINEER, REMOVE ALL TEMPORARY EROSION AND SEDIMENT CONTROL DEVICES. REPAIR ALL DISTURBED AREAS DUE TO THE REMOVAL OF THE EROSION PRACTICES. TOPSOIL, SEED, AND MULCH THESE AREAS.

THE SITE WORK CONTRACTOR WILL BE RESPONSIBLE FOR SCHEDULING AND CONDUCTING ALL NECESSARY INSPECTIONS WITH THE APPROPRIATE LOCAL AND STATE OFFICIALS. COORDINATION WITH THE APPROPRIATE ENTITIES WILL BE EXECUTED BY THE CONTRACTOR.

Details of Erosion and Sediment Control Measures

Temporary Control Measures

Temporary Diversion Dike

TEMPORARY DIVERSION DIKES SHALL BE INSTALLED PRIOR TO CLEARING AND GRADING TO DIRECT STORMWATER RUNOFF AWAY FROM DISTURBED AREAS. TEMPORARY DIVERSION DIKES WILL BE INSTALLED IN ACCORDANCE TO STANDARD AND SPECIFICATION 3.09.

Temporary Sediment Trap

A TEMPORARY SEDIMENT TRAP WILL BE INSTALLED AT ON-SITE DRAINAGE AREAS EXCEEDING ONE ACRE IN SIZE. THEIR PURPOSE IS TO DETAIN SEDIMENT-LADEN RUNOFF FROM SMALL DISTURBED AREAS LONG ENOUGH TO ALLOW THE MAJORITY OF THE SEDIMENT TO SETTLE OUT. THE SEDIMENT TRAPS WILL BE INSTALLED IN ACCORDANCE WITH VESCH SPECIFICATION 3.13.

Permanent Control Measures

Slope Stabilization

TEMPORARY MEASURE WILL BE TAKEN DURING CONSTRUCTION AND WILL BE FOLLOWED BY PERMANENT MEASURES AS SOON AS POSSIBLE AFTER GRADING ACTIVITIES ARE COMPLETED. TEMPORARY MEASURES INCLUDE SILT FENCE, STRAW BALE BARRIERS, TEMPORARY DIVERSION DIKES, ROCK CHECK DAMS AND INLET PROTECTION. PERMANENT MEASURES TO BE TAKEN INCLUDE BUT, ARE NOT LIMITED TO, OUTLET PROTECTION, RIP-RAP CHANNEL PROTECTION, PERMANENT SEEDING, MULCHING AND SLOPE TREATMENT.

AREAS WITH THREE-TO-ONE (3:1) SLOPES OR LESS AND WITHOUT HIGHLY ERODIBLE SOILS WILL BE STABILIZED BY SEEDING IN ACCORDANCE WITH SPECIFICATIONS NOTED IN THE PERMANENT SEEDING SECTION OF THIS NARRATIVE. STRAW MULCH SHALL BE DETERMINED IN THE FIELD PRIOR TO PERMANENT SEEDING.

CRITICAL AREAS SUCH AS SLOPES GREATER THAN THREE-TO-ONE (3:1) OR TEMPORARY SLOPE AND SOIL STABILIZATION METHODS WILL BE IMPLEMENTED GREATER THAN TWENTY-FIVE FEET IN LENGTH SHALL INCLUDE THE INSTALLATION OF SOIL STABILIZATION BLANKETS AND/OR MATTING OR OTHER SIMILAR MEASURES TO PROVIDE SLOPE STABILITY.

Permanent Seeding

PERMANENT SEEDING SHALL OCCUR AS SOON AS AFTER FINAL GRADES HAVE BEEN ESTABLISHED AS POSSIBLE. ALL DISTURBED AREAS OF THE PROJECT SITE WILL BE TEMPORARILY SEEDED, AND WHEN CONDITIONS ARE RIGHT, WILL BE PERMANENTLY VEGETATED.

Seeding Application Rates

APPLICATION	RATE
LIME	2.0 TONS PER ACRE
FERTILIZER (10-20-10)	1,000 POUNDS PER ACRE
SEED MIXTURE	150 POUNDS PER ACRE
MULCH (SMALL GRAIN STRAW)	2.0 TONS PER ACRE

SEED MIXTURES MAY VARY SLIGHTLY DEPENDING UPON THE PLANTING PERIOD, BUT TYPICALLY ANNUAL RYE AND/OR FOXTAIL MILLET OR A TALL FESCUE WILL NE USED IN MOST INSTANCES.

Maintenance Of Erosion And Sediment Control Facilities

ALL MAINTENANCE OF TEMPORARY AND PERMANENT EROSION AND SEDIMENT CONTROL FACILITIES SHALL BE CARRIED OUT IN ACCORDANCE WITH SECTION 1.7 OF THE VIRGINIA EROSION AND SEDIMENT CONTROL REGULATIONS (VR 625-02-00). DURING THE PERIOD THAT THE PROJECT SITE IS UNDER CONSTRUCTION, THE CONTRACTOR WILL BE RESPONSIBLE FOR MAINTENANCE OF THE EROSION AND SEDIMENT CONTROL FACILITIES. THE CONTRACTOR WILL INSPECT EROSION AND SEDIMENT CONTROL FACILITIES ON A REGULAR BASIS, ESPECIALLY AFTER PERIODS OF HEAVY RAINFALL. ANY DAMAGE DISCOVERED WILL BE REPAIRED PROMPTLY BY THE CONTRACTOR. FURTHERMORE, A READILY AVAILABLE SUPPLY OF EROSION AND SEDIMENT CONTROL MATERIALS WILL BE MAINTAINED BY THE CONTRACTOR AT ALL TIMES.

References

1. DIVISION OF SOIL AND WATER CONSERVATION. VIRGINIA EROSION AND SEDIMENT CONTROL HANDBOOK (VESCH). THIRD EDITION. VIRGINIA DEPARTMENT OF CONSERVATION AND RECREATION, 1992.
2. VIRGINIA SOIL AND WATER CONSERVATION BOARD. VIRGINIA EROSION AND SEDIMENT CONTROL REGULATIONS (VESCR), VR 625-02-00. VIRGINIA DEPARTMENT OF CONSERVATION AND RECREATION, SEPTEMBER 1990.
3. U.S. SOIL CONSERVATION SERVICE, SOIL SURVEY OF CHESTERFIELD COUNTY, VIRGINIA, U.S. DEPARTMENT OF AGRICULTURE, WASHINGTON, D.C., 1978
4. RADER, E.K. AND N.H. EVANS (EDS.) 1993. GEOLOGIC MAP OF VIRGINIA-EXPANDED EXPLANATION. VIRGINIA DIVISION OF MINERAL RESOURCES. CHARLOTTESVILLE, VIRGINIA.

Date: 4/27/99

1. Project Name: Kingsmill Marina Improvements
2. Project location: 1000 Kingsmill Road
3. Engineer: Timothy J. Hogan, P.E., Vanasse Hangen Brustlin, Inc.
4. Source of Water: Newport News Waterworks
5. Design Population (Number and Type of Dwellings): 880 SF Dock Office / Food Service

5a: Industrial: ______ 5b: Domestic: 50 gpm peak *

5c: Fire Flow: EXISTING FIRE HYDRANT ON SITE 170' FROM BUILDING. LESS THAN ½ THE REQUIRED F.H. SPACING FOR COMMERCIAL/INDUSTRIAL 5d: Pressure: Maximum: EXISTING SYSTEM

Minimum: EXISTING SYSTEM (NEGLIABLE EFFECT ON THE EXISTING SYSTEM PRESSURE)

6. Water Distribution System Piping:

Pipe Diameter (Inches)	Length (Feet)	Material (DI, PVC, etc.)
All water supply piping is existing. There		
are no proposed changes to the system		

* Estimate based on data obtained from the Architect, PMA.

11. Water Meter Assemblies: 2" (Size), 1 (Number) EXISTING

______ (Size), ______ (Number)

______ (Size), ______ (Number)

______ (Size), ______ (Number)

Water Data Sheet

1 Compile site-specific data.

		PRE-DEVELOPMENT	POST-DEVELOPMENT
A*		= 4.4731 acres	= 4.4731 acres
I_a:	structures	= 0.0140 acres	= 0.0260 acres
	parking lot	= 0.8957 acres	= 1.0190 acres
	roadway	= 0.3045 acres	= ______ acres
	other	= 0.0040 acres	= 0.0032 acres
		= ______ acres	= ______ acres
		= ______ acres	= ______ acres
	total I_a	= 1.2182 acres	= 1.0482 acres
$I = (\text{total } I_a / A) \times 100$		= 27% percent expressed in whole numbers	= 23 percent expressed in whole numbers
$R_v = 0.05 + (0.009 \times I)$		= 0.293 unitless	= 0.257 unitless
C:	$I \geq 20 = 1.08$ mg/l; $I < 20 = 0.26$ mg/l	= 1.08 mg/l	= 1.08 mg/l

* Although the area subject to regulations may be only the area actually in a CBPA, some localities may require all of the site to comply with criteria.

2 Set constants.

P_j = unitless rainfall correction factor
= 0.9 for all of Tidewater Virginia

P = annual rainfall depth in inches
= 40 inches for Northern Virginia area
= 43 inches for Richmond Metropolitan area
= 45 inches for Hampton Roads area
44 inches used for James City County

12 and 2.72 are used in the equation as unit conversion factors.

3 Calculate the pre-development load (L_{pre}).

$L_{pre} = P \times P_j \times R_{v(pre)} \times C_{pre} \times A \times 2.72 / 12$

$= 44 \times 0.9 \times .293 \times 1.08 \times 4.4731 \times 2.72 / 12$

= 12.7 pounds per year

4 Calculate the post-development load (L_{post}).

$L_{post} = P \times P_j \times R_{v(post)} \times C_{post} \times A \times 2.72 / 12$

$= 44 \times 0.9 \times .257 \times 1.08 \times 4.4731 \times 2.72 / 12$

= 11.1 pounds per year

5 Calculate the pollutant removal requirement (RR).

$RR = L_{post} - (0.9 \times L_{pre})$ %RR = $(RR / L_{post}) \times 100$

$= 11.1 - (0.9 \times 12.7)$ = (____ / ____) × 100

= -0.33 pounds per year = ______ %

RR < Ø BMP NOT REQUIRED C-16

Guidance Calculation Procedure Worksheet B: Redevelopment

"THE REMOVAL REQUIREMENT (RR) IS NEGATIVE, THEREFORE THE 10% POLLUTANT REMOVAL REQUIREMENT HAS BEEN MET AND A BMP IS NOT REQUIRED."

Name: Kingsmill Marina
Client: Kingsmill Resort
Subject: PIPE SIZING

Proj. No.: 30699.00
Date: 4/19/99
Computed by: TJH
Checked by:

Design Parameters
10 Year Storm
12" Min. Pipe Size
n= 0.013

LOCATION: DESCRIPTION	FROM	TO	AREA (AC)	C	C*A	Σ C*A	FLOW TIME (Min.): Ovld.	Ditch	Pipe	Conc time	I (in/hr)	Q cfs	DESIGN: Pipe Size(in)	Slope ft/ft	Q full	V fps	PROFILE: Length	Fall	Rim Upper	Inv. Upper	Inv. Lower
EXISTING PIPE	1	2	3	0.85	2.55	2.55				6	6.9	17.60	30	0.075	112.63	22.96	141	10.60	22.18	18.68	8.08
EXISTING PIPE	2	3	0.2824	0.9	0.25	2.80				6	6.9	36.94	30	0.033	74.71	15.23	32	1.06	12.80	8.08	7.02
NEW PIPE	4	3	0.2824	0.9	0.25	0.25				6	6.9	1.75	12	0.174	14.86	18.93	7	1.00	13.10	9.27	8.27
EXISTING PIPE	3	5		0.9	0.00	3.06				6	6.9	38.70	30	0.033	74.71	15.23	64	2.15		7.02	4.87

Storm Drainage Computations

n = 0.013

INLET STATION #	I/T/OF	OUTLET WATER SURFACE ELEV. (2)	D_o (IN) (3)	R (FT)	Q_o (CFS) (4)	L_o (FT) (5)	SFo % (6)	Hf (FT) (7)	Vo (FPS) (8)	Ho (FT) (9)	Qi (CFS) (10)	Vi (FPS) (11)	Qi x Vi (12)	$V_i^2/2g$	H_i (FT) (13)	Angle (14)	K	H_Δ (FT) (15)	H_i (FT) (16)	1.3 H_i (17)	0.5 H_i (18)	Final H (FT) (19)	Inlet Water Surface Elev. (20)	Rim Elev./ Gutter Elev. (21)	Precast Manhole/Tee	Inlet Shaping Y/N (22)
	OF																						6.87			
3	T	9.02	30	0.53	38.70	64	1.11	0.71	15	0.87			0	0	0.00	0	0	0.00	0.87	1.1355		1.85	10.87	12.80		N
2	I	10.08	30	0.53	36.94	32	1.01	0.32	15	0.87			0	0	0.00	0	0	0.00	0.87	1.1355		1.46	11.54	13.10		N
1	I	20.68	30	0.53	17.60	141	0.23	0.32	23	2.05			0	0	0.00	0	0	0.00	2.05			0.32	21.00	22.18		N

R=hydraulic radius
A=pipe area

90° K = 0.70	50° K = 0.47	20° K = 0.16
80° K = 0.66	40° K = 0.38	15° K = 0.10
70° K = 0.61	30° K = 0.28	
60° K = 0.55	25° K = 0.22	

Equations:
outlet water elevation = .8 pipe diame $Ho = 0.25 V_o^2/2g$ $H\Delta = K V_i^2/2g$
$Sf = [nQ_o/(1.486AR^{2/3})]^2$

$H_i = 0.35 V_i^2/2g$
FINAL $H = H_i + H_f$

Hydraulic Grade Line

Date 4-27-99

I. Project Name: KINGSMILL MARINA IMPROVEMENTS
II. Project Location: 1000 KINGSMILL ROAD
III. Engineer: TIMOTHY J. HOGAN, PE
IV. Point of Connection to Authority System: NA - EXISTING SYSTEM IS TO REMAIN
V. Design Population (Number and Type of Dwellings): 880 SF DOCK OFFICE/FOOD SERVICE
VI. Average Design Flow: 800 gpd (Data obtained by PMA)
VII. Peak Design Flow: 2000 gpd (250% of average flow)
VIII. Pipe Material: EXISTING 6" DIP LATERAL TO EXISTING MANHOLE
IX. Pipe Diameter:

(Inches)	Length (Feet)
4" (laterals)	
6"	182' EXISTING
8"	
10"	
12"	
15"	
18"	
21"	
24"	

TOTAL FEET ______

X. Manholes: (A) Standard 1 EXISTING (Number) Average Depth 8 ft.
(B) Drop 0 (Number) Average Depth —

XI. (A) Pump Stations Size N/A (GPM)
(B) Force Main (Size Length) N/A (Feet)

Sewer Data Sheet- Appendix "B"

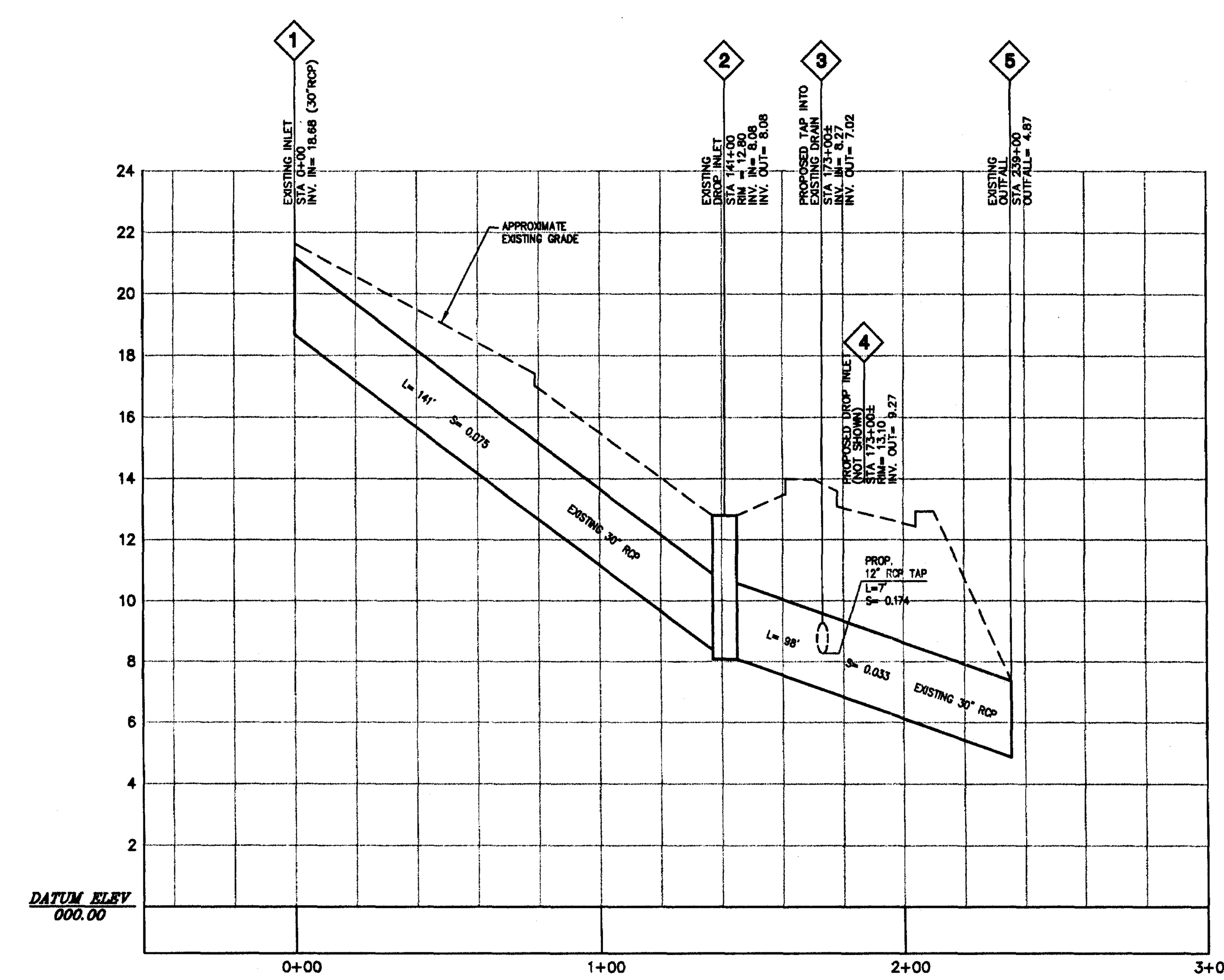

Storm Drain Profile

CENTER LINE OF EXISTING 30" RCP

HORIZONTAL
40 0 40 80
4 0 4 8
VERTICAL
SCALE IN FEET

VHB
Vanasse Hangen Brustlin, Inc.
Transportation
Land Development
Environmental Services
477 McLaws Circle; Suite 1
Williamsburg, Virginia 23185
757 220 0500 • FAX 757 220 8544

Jeff Stodghill
Architect
PMA
PLANNERS AND ARCHITECTS
10227 Warwick Boulevard Newport News Virginia 23601
Telephone (757) 596-8200 Facsimile (757) 596-6598

No.	Revision	Date	Approved
1	REVISED FOR FINAL APPROVAL	6/3/99	TH

Designed by | Drawn by | Checked by
CAD checked by | Approved by
Scale: As Shown | Date: May 7, 1999

Project Title
Kingsmill Marina Improvement Project

James City County, Virginia

Issued for
Plan Of Development Approval

Drawing Title
Construction Details and Stormwater Management Computations

Drawing Number
C-11

Sheet 11 of 11

VHBCad File Name 30699dt1
Project Number 30699.26

COMMONWEALTH OF VIRGINIA TIMOTHY J. HOGAN No. 032561 6-10-99

As-Built SP-87-99
JR039 Sheet 2 of 3

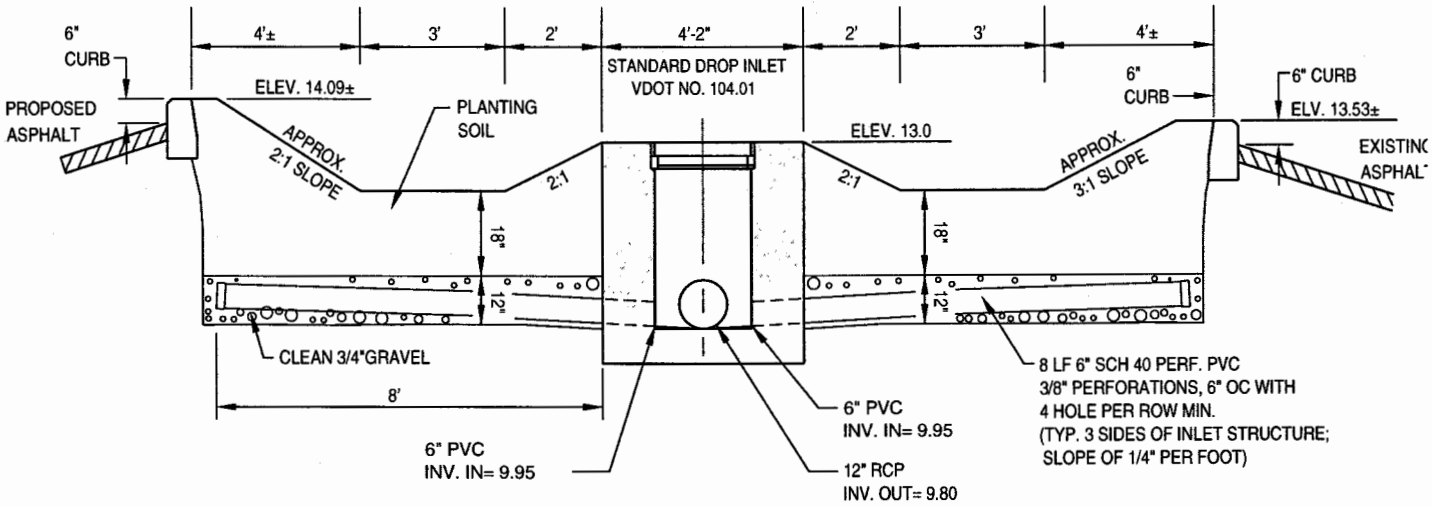

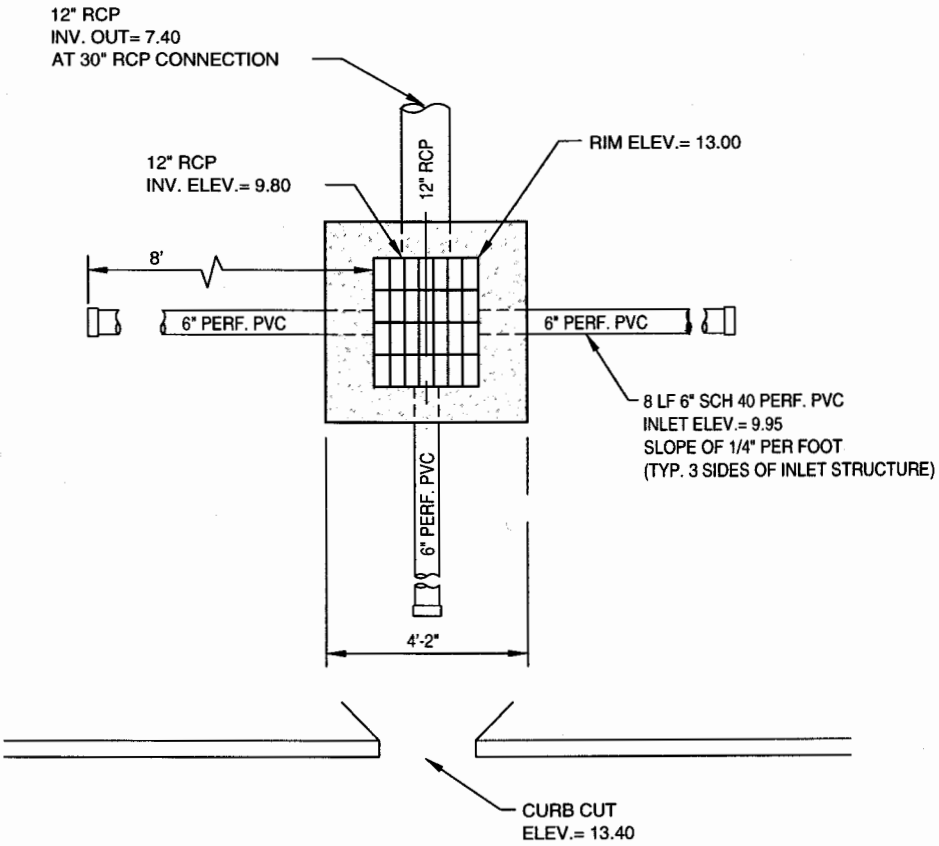

SCALE: 1/4" = 1'-0"

Timothy J. Hogan, P.E. 8-16-99 Date

Vanasse Hangen Brustlin, Inc.

Cross Section A-A (As-Built)

Kingsmill Marina
Improvement Project
James City County, Virginia

30699GDET.dwg

VHB

Vanasse Hangen Brustlin, Inc.

Transportation
Land Development
Environmental Services
477 McLaws Circle; Suite 1
Williamsburg, Virginia 23185
757 220 0500 • FAX 757 220 8544

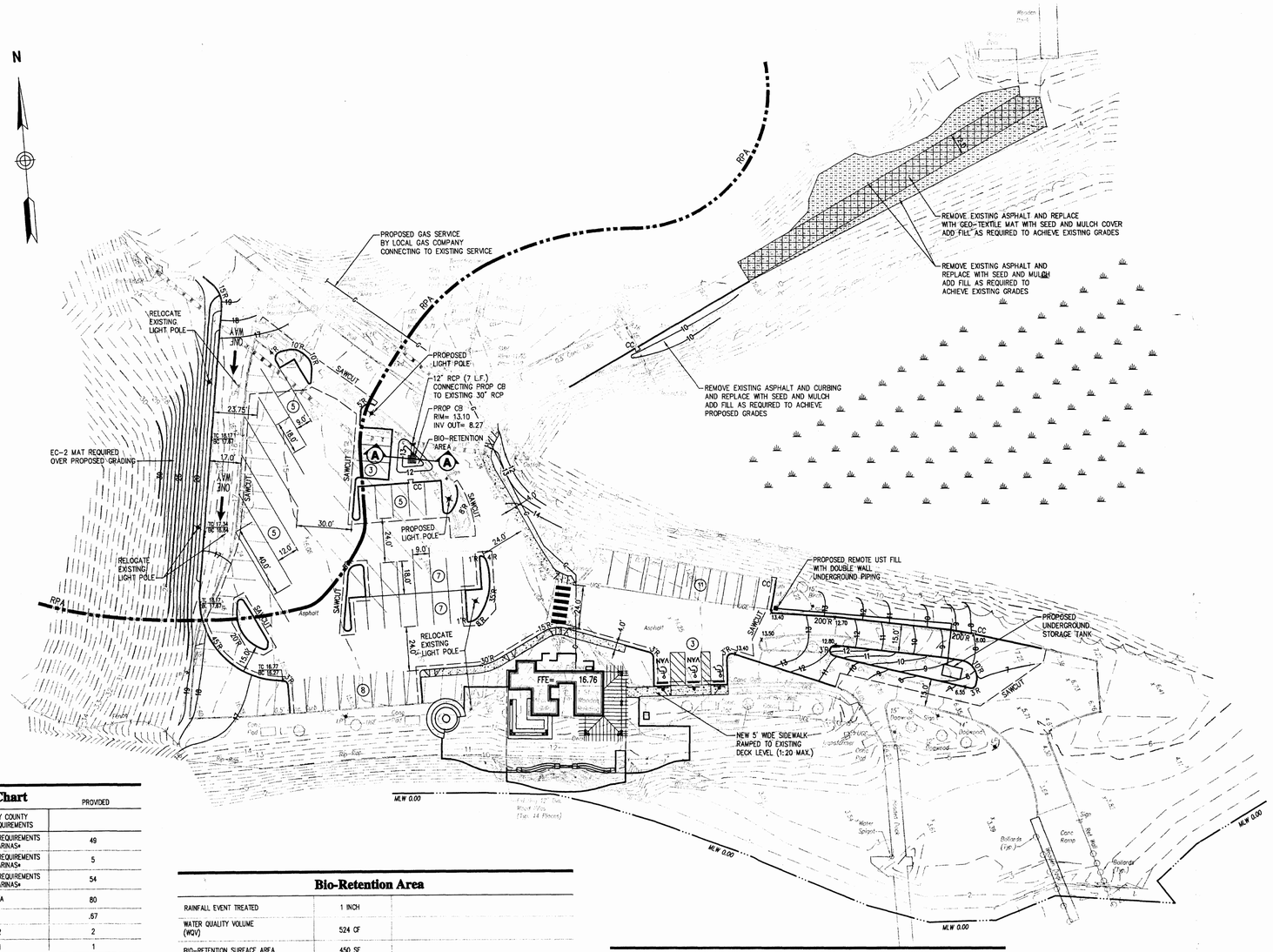

Parking Summary Chart

DESCRIPTION	EXISTING	JAMES CITY COUNTY PARKING REQUIREMENTS	PROVIDED
AUTOMOBILE SPACES	45	NO SPECIFIC REQUIREMENTS FOR MARINAS*	49
AUTOMOBILE/ TRAILER SPACES	6	NO SPECIFIC REQUIREMENTS FOR MARINAS*	5
TOTAL SPACES	51	NO SPECIFIC REQUIREMENTS FOR MARINAS*	54
TOTAL BERTHS	91	N/A	80
RATIO OF SPACES TO BERTHS	.56		.67
MIN. NO. OF HANDICAPPED – STD.	1	2	2
MIN. NO. OF HANDICAPPED – VAN	0	1	1

Footnotes:

* INDUSTRY STANDARDS SUGGEST 0.3 TO 0.5 PARKING SPACES PER BERTH MINIMUM. REFER TO PLANNING AND DESIGN GUIDELINES FOR SMALL CRAFT HARBORS, ASCE, 1994. MARINAS AND SMALL CRAFT HARBORS, B. TOBIASON, PE AND R. KOLLMEYER, PHD, 1991.

Zoning Summary Chart

	JAMES CITY COUNTY ZONING REQUIREMENTS	PROVIDED
STALL SIZE (STD)	9' x 18'	9'x 18'
STALL SIZE (HC- STD)	9' + 5' ACCESS x 18'	9' + 5' ACCESS x 18'
TWO-WAY AISLE WIDTH(PARKING LOT)	24'	24' AND 30'
ONE-WAY AISLE WIDTH (55° PARKING)	18' FOR 60'	23.75'
MAXIMUM BUILDING HEIGHT	4 STORIES (60')	1 STORY (24')

ZONING DISTRICT: R-4 RESIDENTIAL PLANNED COMMUNITY

* PARKING AREA LANDSCAPING SHOULD BE 7.5% OF TOTAL PARKING AREA

Bio-Retention Area

RAINFALL EVENT TREATED	1 INCH	
WATER QUALITY VOLUME (WQV)	524 CF	
BIO-RETENTION SURFACE AREA	450 SF	
REMOVAL EFFICIENCY	65%	
APPROXIMATE EQUIVALENT REDUCTION IN IMPERVIOUS AREA	0.1667 AC	

Parking Lot Landscaping

	EXISTING	JAMES CITY COUNTY ZONING REQUIREMENTS	PROVIDED
PARKING LOT AREA	0.8957		
TOTAL PARKING SPACES	51		54
LANDSCAPE AREA	0.0423		
RATIO OF LANDSCAPE/ PARKING AREA **	4.7%	7.5%**	%
PLANTINGS ***			
TREES (1 PER 10 SPACES)	5	6	10
DECIDUOUS SHADE (50% OF TREES)	5	3	5
SHRUBS (2 PER 10 SPACES)		12	15
EVERGREEN (25% OF SHRUBS)		3	5

** FOR PARKING LOTS LESS THAN 65,000 SF IN EXISTENCE PRIOR TO JULY 3, 1990, 7.5% MINIMUM OF LANDSCAPE AREA WITHIN THE PARKING LOT.

*** PER ORDINANCE 24-86 (C) (2) (E) (3).

Parking Lot Lighting

	EXISTING	REQUIRED	PROPOSED
LIGHT FIXTURES	9	9	11
RELOCATED FIXTURES	N/A	N/A	3

LUMINARIES ARE MOUNTED ON LIGHT POLES LESS THAN 30' IN HEIGHT HORIZONTALLY AND ARE RECESSED FIXTURES WITH NO BULB, LENS OR GLOBE EXTENDING BELOW THE FIXTURE AS PER ORDINANCE 24-53 (B) (1) (C) (3).

Green Space Calculation

	ACRES (AC)	EXISTING IMPERV. (AC)	EXISTING GREEN SP. (AC)	PROPOSED IMPERV. (AC)	PROPOSED GREEN SP. (AC)	PROP. GREEN SPACE/ TOT. ACRES (%)
KINGSMILL MARINA PARKING LOT	00.00	00.00	00.00	00.00	00.00	00

30 0 30 60
SCALE IN FEET

Progress Print

No.	Revision	Date	Approved

Designed by | Drawn by | Checked by
CAD checked by | Approved by
Scale 1"= 30' | Date April xx, 1999

Project Title

Kingsmill Marina Improvement Project

James City County, Virginia

Issued for

Plan Of Development Approval

Drawing Title

Proposed Improvements Plan
Marina Shore Side Facilities

Drawing Number

C-6

Sheet 6 of

VHB/Cad File Name 306999m

Project Number 30699.26

GUIDANCE CALCULATION PROCEDURE

WORKSHEET B : REDEVELOPMENT

1 Compile site-specific data.

		PRE-DEVELOPMENT	POST-DEVELOPMENT
A*		= 4.4731 acres	= 4.4731 acres
I_a:	structures	= 0.0140 acres	= 0.0260 acres
	parking lot	= 0.8957 acres	= 1.0190 acres
	roadway	= 0.3045 acres	= _____ acres
	other	= 0.0040 acres	= 0.0032 acres
		= _____ acres	= _____ acres
		= _____ acres	= _____ acres
	total I_a	= 1.2182 acres	= 1.0482 acres
$I = (\text{total } I_a / A) \times 100$		= 27% percent expressed in whole numbers	= 23 percent expressed in whole numbers
$R_v = 0.05 + (0.009 \times I)$		= 0.293 unitless	= 0.257 unitless
C:	$I \geq 20 = 1.08$ mg/l $I < 20 = 0.26$ mg/l	= 1.08 mg/l	= 1.08 mg/l

* Although the area subject to regulations may be only the area actually in a CBPA, some localities may require all of the site to comply with criteria.

2 Set constants.

P_j = unitless rainfall correction factor
= 0.9 for all of Tidewater Virginia

P = annual rainfall depth in inches
= 40 inches for Northern Virginia area
= 43 inches for Richmond Metropolitan area
= 45 inches for Hampton Roads area
44 inches used for James City County

12 and 2.72 are used in the equation as unit conversion factors.

3 Calculate the pre-development load (L_{pre}).

$L_{pre} = P \times P_j \times R_{v(pre)} \times C_{pre} \times A \times 2.72 / 12$

$= 44 \times 0.9 \times .293 \times 1.08 \times 4.4731 \times 2.72 / 12$

$= 12.7$ pounds per year

4 Calculate the post-development load (L_{post}).

$L_{post} = P \times P_j \times R_{v(post)} \times C_{post} \times A \times 2.72 / 12$

$= 44 \times 0.9 \times .257 \times 1.08 \times 4.4731 \times 2.72 / 12$

$= 11.1$ pounds per year

5 Calculate the pollutant removal requirement (RR).

$RR = L_{post} - (0.9 \times L_{pre})$

$= 11.1 - (0.9 \times 12.7)$

$= -0.33$ pounds per year

RR < Ø BMP NOT REQUIRED

$\%RR = (RR / L_{post}) \times 100$

$= (\_\_\_\_ / \_\_\_\_) \times 100$

$= \_\_\_\_\_ \%$

Transportation
Land Development
Environmental
Services

VHB

imagination | innovation | energy Creating results for our clients and benefits for our communities

Vanasse Hangen Brustlin, Inc.

MAY 1999
RECEIVED
ENVIRONMENTAL DIVISION

May 5, 1999

Ref: 30699

Mr. Darryl E. Cook
Environmental Director
James City County
101 E. Mounts Bay Road
P.O. Box 8784
Williamsburg, VA 23187-8784

Re: Kingsmill Marina Improvement Project Site Plan

Dear Mr. Cook:

Thank you for taking the time to meet with Neville Reynolds and me on May 3, 1999, to discuss the Kingsmill Marina project. We appreciate your involvement with the project at this stage so that we may address your concerns prior to site plan submittal.

During our meeting, you asked for the areas of the proposed marina building addition and deck expansion. The figures weren't readily available at that time and are provided below, as well as figures for the reduction of impervious areas and the results of pollutant removal calculations based on the proposed plans. Sheet C- 6 is attached. The plans are in their final form except for the addition of minor construction notes and revisions during final in-house reviews.

	Existing	Proposed	Comments
Wood Decking	2191 SF	5116 SF	+ 2925 SF
Marina Building	774 SF	1298 SF	+ 524 SF
Impervious Area For Site	1.2182 Ac	1.0590 Ac	Reduction = 13.9%
Impervious Area For RPA Only	0.9604 Ac	0.7430 AC	Reduction = 18.6%
Bio-Retention *		- 0.1667 Ac	Reduction = 13.7%

*Equivalent reduction of impervious area based on a 65% pollutant removal efficiency of the Bio-Retention area. (Local Assistance Manual Table 2, Design 9 (1.0 in./imp ac.)

As you can see, the impervious area has been reduced by 13.9% for the overall site by the addition of landscape islands within the parking lot and removing a significant amount of asphalt on Warehams Pond Road and in other areas. Pollutant load calculations based on the reduction of impervious areas for the entire site are provided on the attached Worksheet B for redevelopment. When the reduction of impervious area within the RPA is evaluated, the reduction is nearly 19%. If the added benefit of the proposed bio-retention

477 McLaws Circle, Suite 1
Williamsburg, Virginia 23185
757.220.0500 ▪ FAX 757.220.8544
email: info@vhb.com
www.vhb.com

area is included, the total equivalent reduction of impervious area within the RPA is approximately 32%.

The above calculations do not include the existing or proposed deck, since wood decks are considered pervious areas. Even if the deck were considered impervious, the reduction in impervious area within the RPA (NOT including the benefit of the Bio-Retention Area) is still over 13%.

By utilizing the parking lot island as a bio-retention area, the resulting pollutant load removal equates to an additional impervious area reduction of 13.7% within the RPA. For similar filtering systems, removal rate efficiencies of 65 – 90% are stated. Our calculations are based on a conservative 65% efficiency for treating the first 1-inch of rainfall.

Due to the limited space available within the existing parking lot and the need to route stormwater overflow from the retention area into the existing stormwater system, an additional 13.7% reduction of pollutants is quite an achievement. We are pleased with the results obtained by using the guidelines and design procedures presented in the publication, DESIGN OF STORMWATER FILTERING SYSTEMS, by the Center for Watershed Protection. I feel this is a good example of creatively satisfying the intent of County codes and exceeding the requirements of the Bay Act without placing undue hardship on the owner.

If you have any questions, or would like to discuss this further, please call me at 220-0500. Again, thank you for your cooperation and input on this project.

Very truly yours,

VANASSE HANGEN BRUSTLIN, INC.

Timothy J. Hogan, PE
Project Engineer

Attachments: Sheet C-6 and Worksheet B

VHB

Wilva/projects/30699/docs/letters/cook2

Transportation
Land Development
Environmental
Services

VHB

imagination | innovation | energy Creating results for our clients and benefits for our communities

AUG 1999
RECEIVED
ENVIRONMENTAL DIVISION

Vanasse Hangen Brustlin, Inc.

August 16, 1999

Ref: 30699

Mr. Darryl E. Cook
Environmental Director
James City County
101 E. Mounts Bay Road
P.O. Box 8784
Williamsburg, VA 23187-8784

Re: Kingsmill Marina Improvement Project, Bio-Retention Area As-Builts

Dear Mr. Cook:

Attached is the as-built drawing for the bio-retention area constructed as part of the above referenced project. This fulfills the requirement for providing the County with a signed and sealed as-built drawing as stated in item no. 3 of your site plan comments dated June 1, 1999.

The as-built information was provided to me by the contractor, Hederson Inc. During the construction of the bio-retention system, I was on site inspecting the work as it progressed. I find the construction of the bio-retention system to be in substantial conformance to the approved plans and specifications.

Attached are two signed and sealed as-built drawings for the County records.

If you have any questions, please call me at 220-0500. Again, thank you for your assistance with this project.

Very truly yours,

VANASSE HANGEN BRUSTLIN, INC.

Timothy J. Hogan

Timothy J. Hogan, PE
Project Engineer

C: Matt Delman, Kingsmill Resort (w/copy)
Jesse Young, Kingsmill Resort (w/ copy)
Ken Geidd, Kingsmill Resort (w/ copy)
Courtney Kyle, JCC Planning Division (w/original)

477 McLaws Circle, Suite 1
Williamsburg, Virginia 23185
757.220.0500 ▪ FAX 757.220.8544
email: info@vhb.com
www.vhb.com

James City County Environmental Division
Stormwater Management / BMP Inspection Report
Bioretention Facilities

Database Inventory No. (if known): JR039

Name of Facility: Kingsmill Marina Improvement BMP No.: 1 of 1 Date: 10/13/00

Location: Busch - Kingsmill Marina

Name of Owner: Busch - Kingsmill

Inspector: SJ Thomas, Gerry Lewis

Type of Facility: Bioretention Cell

Weather Conditions: Sunny, Clear Mid 80's

SP-87-99
Amends SP-58-99

If an inspection item is not applicable, mark NA, otherwise mark the appropriate column.

O.K. - The item checked is in adequate condition and the maintenance program is currently satisfactory.
Routine - The item checked requires attention, but does not present an immediate threat to the function of the BMP.
Urgent - The item checked requires immediate attention to keep the BMP operational and prevent damage to the facility.

Provide an explanation and details in the comment column, if routine or urgent are marked.

Facility Item	O.K.	Routine	Urgent	Comments
Accessibility:	Good Access through Community - Marina Area at James River			
Roads	✓			OK.
Parking Areas	✓			OK.
Gates	✓			None.
Locks	✓			None at site. Clearance thru MAIN GATE.
Safety Fencing	✓			None.
Observation Wells/Areas:	None. Inlet #3 DI-1 main observation point.			
Trap Doors	✓			None.
Manhole Covers	✓			None.
Grates	✓			DI-1 Grate Cover
Steps	✓			None.
Pretreatment Devices: ☑ Inlet ☐ Sump ☐ Forebay ☐ Other				3' deep DI-1 inlet.
Sediment	✓			None
Trash & Debris		✓		Minor Leaves on DI-1 Grate Cov.
Structure	✓			
Other				

Facility Item	O.K.	Routine	Urgent	Comments
Inflow Structure (Describe Type/Location): Curb Cut South of Cell Area.				
Condition	✓			ok.
Erosion		✓		Minor erosion of surf. river stone.
Trash and Debris	✓			None.
Sediment	✓			None
Aesthetics	✓			Well-Kept.
Other				
Primary Infiltration (Bioretention Cell) Area:				
Specialty Landscaping	✓			Trees, Shrubs
Mulch Layer	✓			Intact + moist.
Planting Soil/Sand	✓			Surface by observation.
Subgrade Soil	✓			Not Observable.
Aggregate	✓			Not Observable.
Underdrain	✓			Not Observable, 3 @ 6" PERF PVC.
Sediment	✓			None.
Aesthetics	✓			Well-Kept.
Overflow or Bypass Control Structure (Describe Type/Location): DI-1 Drop Inlet 3' deep.				
Condition	✓			Good Condition. IS-1 shaped.
Erosion	✓			ok
Trash & Debris	✓			ok
Sediment	✓			ok
Other				ok.
Outlet Structure (Describe Type/Location): 12" RCP Connect to exist. storm drain at road				
Condition	✓			ok.
Erosion	✓			ok.
Trash & Debris	✓			ok.
Sediment	✓			ok.
Other				
Contributing Drainage Area/Perimeter Conditions: Parking + Marina Area				
Land Use	✓			Paved.
Stabilization	✓			Not disturbed.
Trash & Debris	✓			None.
Pollutant Hazard	✓			None.
Other				

Facility Item	O.K.	Routine	Urgent	Comments

Sketch and/or Remarks:

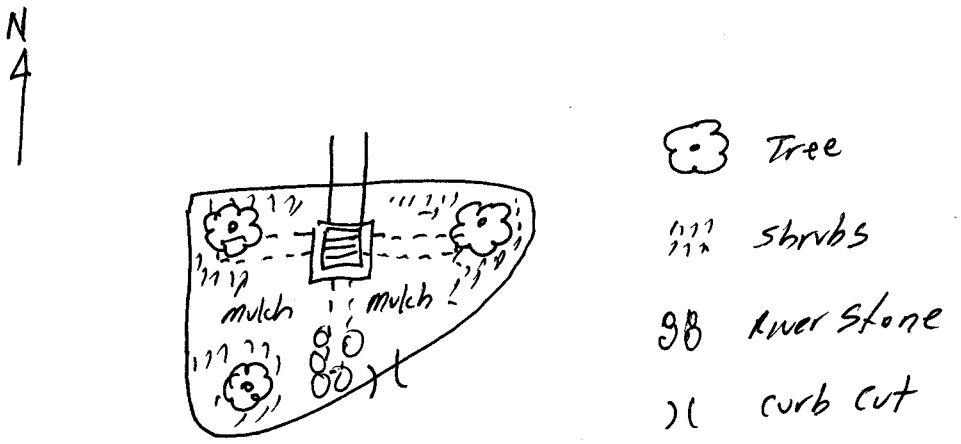

Surrounding Area well-Maintained & well suited for Bioretention.

Overall Environmental Division Internal Rating: 5

Signature: Scott J. Thomas P.E. **Date:** 10/13/00

Title: Civil Engineer Environmental Division

SWMProg\BMP\CoInspProg\Bioret.wpd