CERTIFICATE OF AUTHENTICITY

THIS IS TO CERTIFY THAT THE FOLLOWING ELECTRONIC RECORDS ARE TRUE AND ACCURATE REPRODUCTIONS OF THE ORIGINAL RECORDS OF JAMES CITY COUNTY GENERAL SERVICES DEPARTMENT- STORMWATER DIVISION; WERE SCANNED IN THE REGULAR COURSE OF BUSINESS PURSUANT TO GUIDELINES ESTABLISHED BY THE LIBRARY OF VIRGINIA AND ARCHIVES; AND HAVE BEEN VERIFIED IN THE CUSTODY OF THE INDIVIDUAL LISTED BELOW.

BMP NUMBER: **JR057**

DATE VERIFIED: **June 26, 2012**

QUALITY ASSURANCE TECHNICIAN: **Leah Hardenbergh**

Leah Hardenbergh

LOCATION: WILLIAMSBURG, VIRGINIA

Stormwater Division

MEMORANDUM

DATE: March 11, 2010

TO: Michael J. Gillis, Virginia Correctional Enterprises Document Management Services

FROM: Jo Anna Ripley, Stormwater

PO: 270712

RE: Files Approved for Scanning

General File ID or BMP ID: JR057

PIN: 3630100023

Subdivision, Tract, Business or Owner Name (if known): James City County

Property Description: Fire Station Number 5

Site Address: 3201 Monticello Ave

(For internal use only) **Box** 12 **Drawer:** 7

Agreements: (in file as of scan date) **N** **Book or Doc#:** **Page:**

Comments

JR-057

Contents for Stormwater Management Facilities As-built Files

Each file is to contain:

1. As-built plan
2. Completed construction certification
3. Construction Plan
4. Design Calculations
5. Watershed Map
6. Maintenance Agreement
7. Correspondence with owners
8. Inspection Records
9. Enforcement Actions

POND MAINTENANCE RECORD DRAWING

OF

JR-057

LOCATED AT

FIRE STATION NO. 5

FOR

JCC STORMWATER DIVISION

VICINITY MAP

SCALE: 1" = 1 MILE

SHEET 1 OF 4

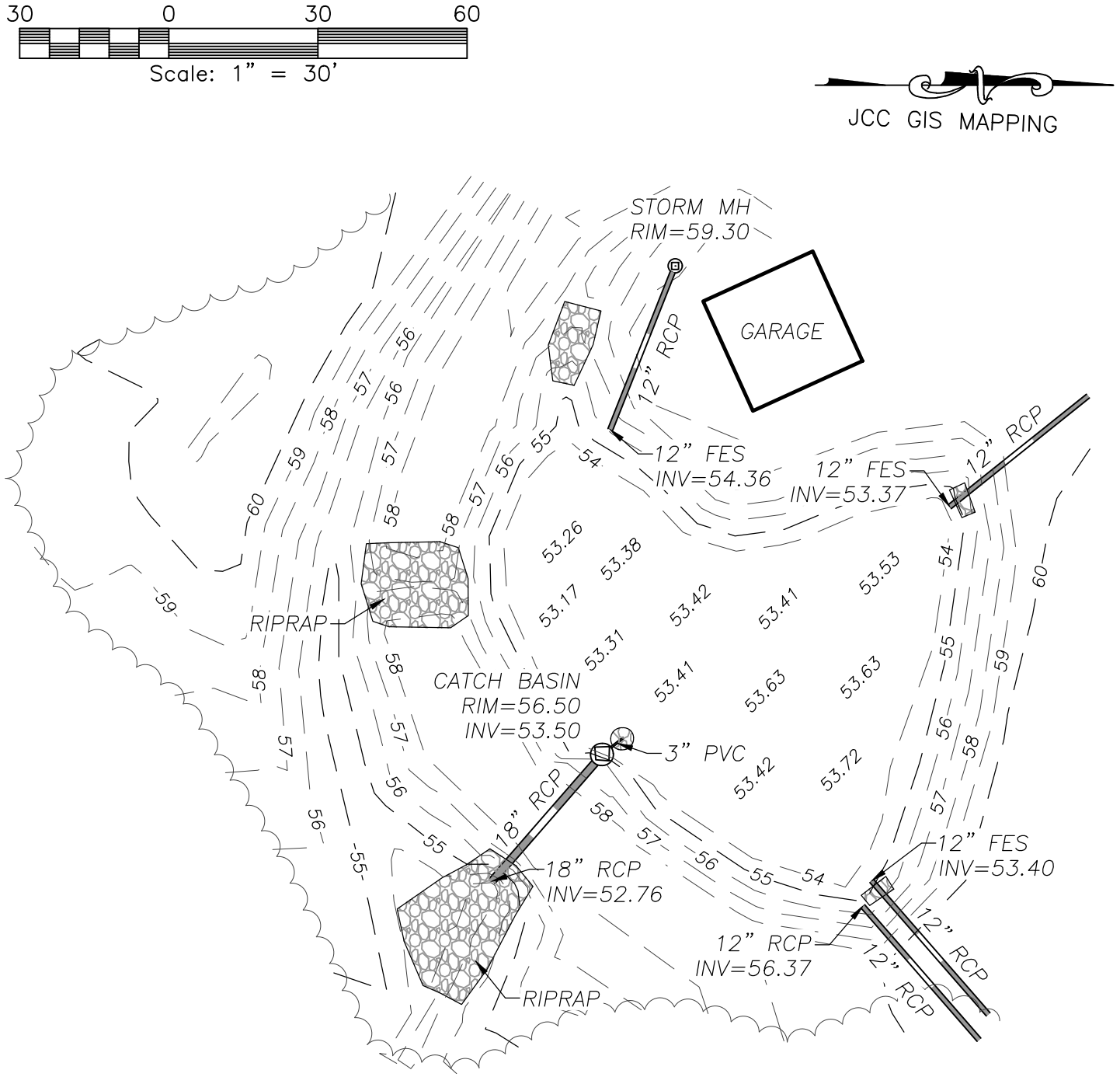

SHEET 2 OF 4

COMMONWEALTH OF VIRGINIA
WILLIAM S. FELTS
Lic. No. 3149
11/21/2016
LAND SURVEYOR

POND MAINTENANCE RECORD DRAWING OF

JR-057 LOCATED AT FIRE STATION NO. 5

FOR

JCC STORMWATER DIVISION

JAMES CITY COUNTY **EXISTING CONDITIONS** VIRGINIA

DATE: 11/21/16
SCALE: 1"=30'
JOB# 16-151
CAD File
JR-057 Fire Station No. 5 Asbuilt.dwg

LandTech Resources, Inc.
ENGINEERING & SURVEYING CONSULTANTS
3925 Midlands Road, Williamsburg, Virginia 23188
Telephone: 757-565-1677 Fax: 757-565-0782
Web: landtechresources.com

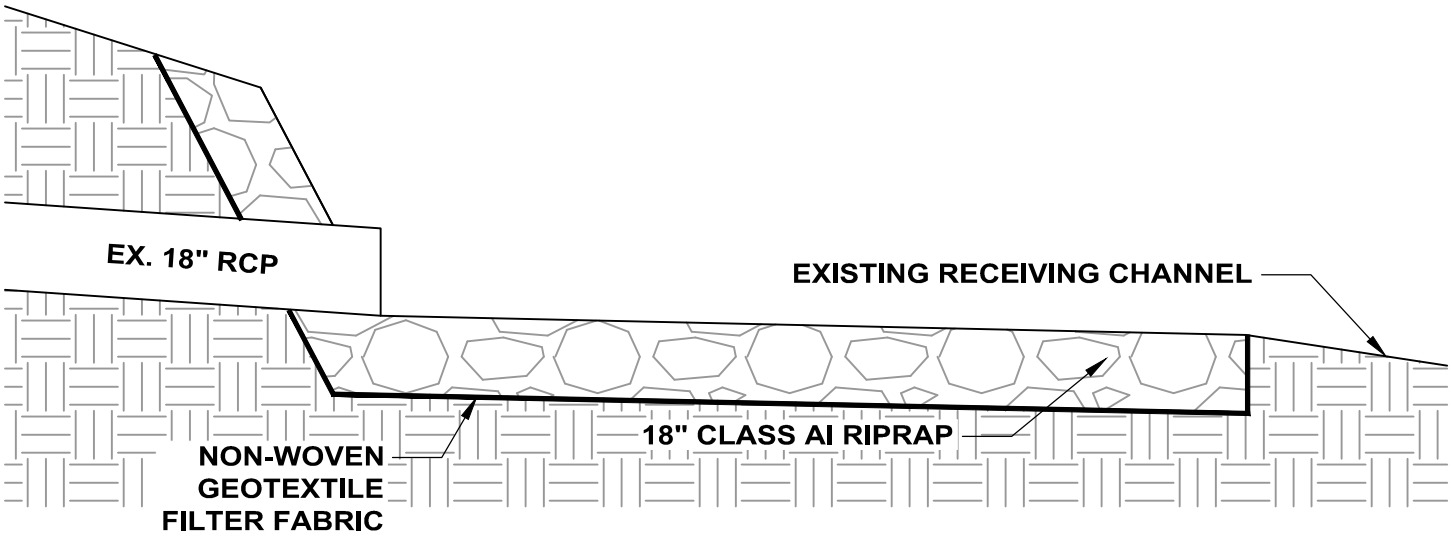

SECTION 'A-A'

N.T.S.

STORMWATER FACILITY CERTIFICATION:

I HEREBY CERTIFY THAT TO THE BEST OF MY KNOWLEDGE AND BELIEF THE STORMWATER FACILITIES SHOWN ON THESE DRAWINGS HAVE BEEN CONSTRUCTED IN ACCORDANCE WITH THE APPROVED PLANS AND SPECIFICATIONS.

WILLIAM S FELTS	
NAME	NAME
LIC. NO. 3149	11/21/2016
VIRGINIA LICENSE	DATE

SHEET 3 OF 4

COMMONWEALTH OF VIRGINIA
WILLIAM S. FELTS
Lic. No. 3149
11/21/2016
LAND SURVEYOR

POND MAINTENANCE RECORD DRAWING OF

JR-057 LOCATED AT FIRE STATION NO. 5

FOR

JCC STORMWATER DIVISION

JAMES CITY COUNTY **DETAILS** VIRGINIA

DATE: 11/21/16
SCALE: N/A
JOB# 16-151
CAD File
JR-057 Fire Station No. 5 Asbuilt.dwg

LandTech Resources, Inc.
ENGINEERING & SURVEYING CONSULTANTS
3925 Midlands Road, Williamsburg, Virginia 23188
Telephone: 757-565-1677 Fax: 757-565-0782
Web: landtechresources.com

COMMONWEALTH OF VIRGINIA
WILLIAM S. FELTS
Lic. No. 3149
11/21/2016
LAND SURVEYOR

POND MAINTENANCE RECORD DRAWING OF

JR-057 LOCATED AT FIRE STATION NO. 5

FOR

JCC STORMWATER DIVISION

JAMES CITY COUNTY — **ASBUILT PICTURES** — VIRGINIA

DATE: 11/21/16
SCALE: N/A
JOB# 16-151
CAD File
JR-057 Fire Station No. 5 Asbuilt.dwg

LandTech Resources, Inc.
ENGINEERING & SURVEYING CONSULTANTS
3925 Midlands Road, Williamsburg, Virginia 23188
Telephone: 757-565-1677 Fax: 757-565-0782
Web: landtechresources.com

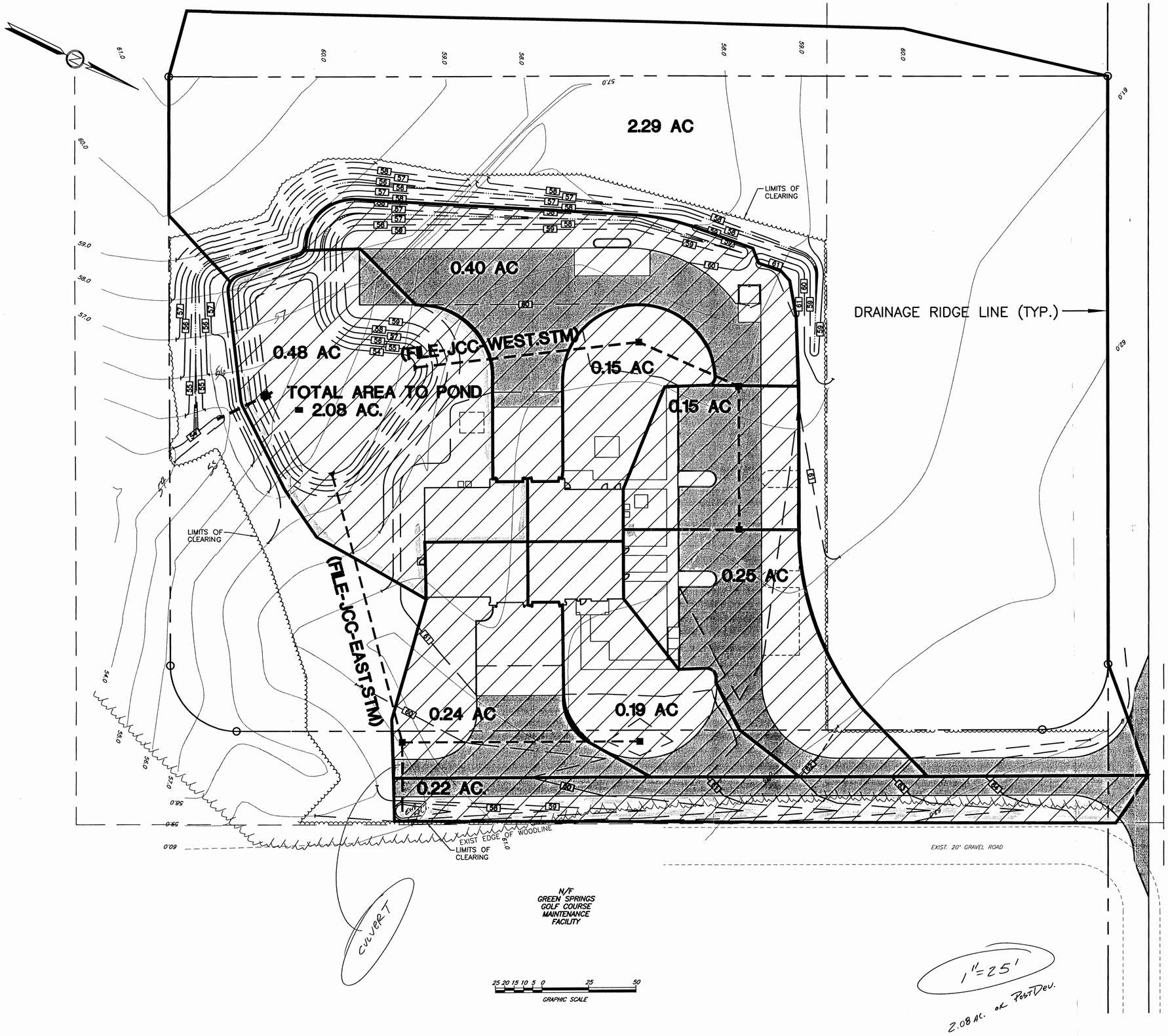

THE TAF GROUP
ARCHITECTURE • ENGINEERING • CONSTRUCTION
1081 19TH STREET SUITE 200 • VIRGINIA BEACH, VA 23451
PHONE: (757) 422-9593 • FAX: (757) 422-3082

FIRE STATION NO. 5

JAMES CITY COUNTY, VIRGINIA

DRAINAGE MAP

DESIGNED:	PFV
DRAWN:	JDS
CHECKED:	SAG
SCALE:	1"=25'
DATE:	6/30/99
FILE:	DRAIN MAP
PROJ. #:	980440
REVISIONS:	

SHEET NO.
1
OF 1 SHEETS

10/27/1999 13:31:56

JR057_JCC_FIRE_STATION_5 - 004

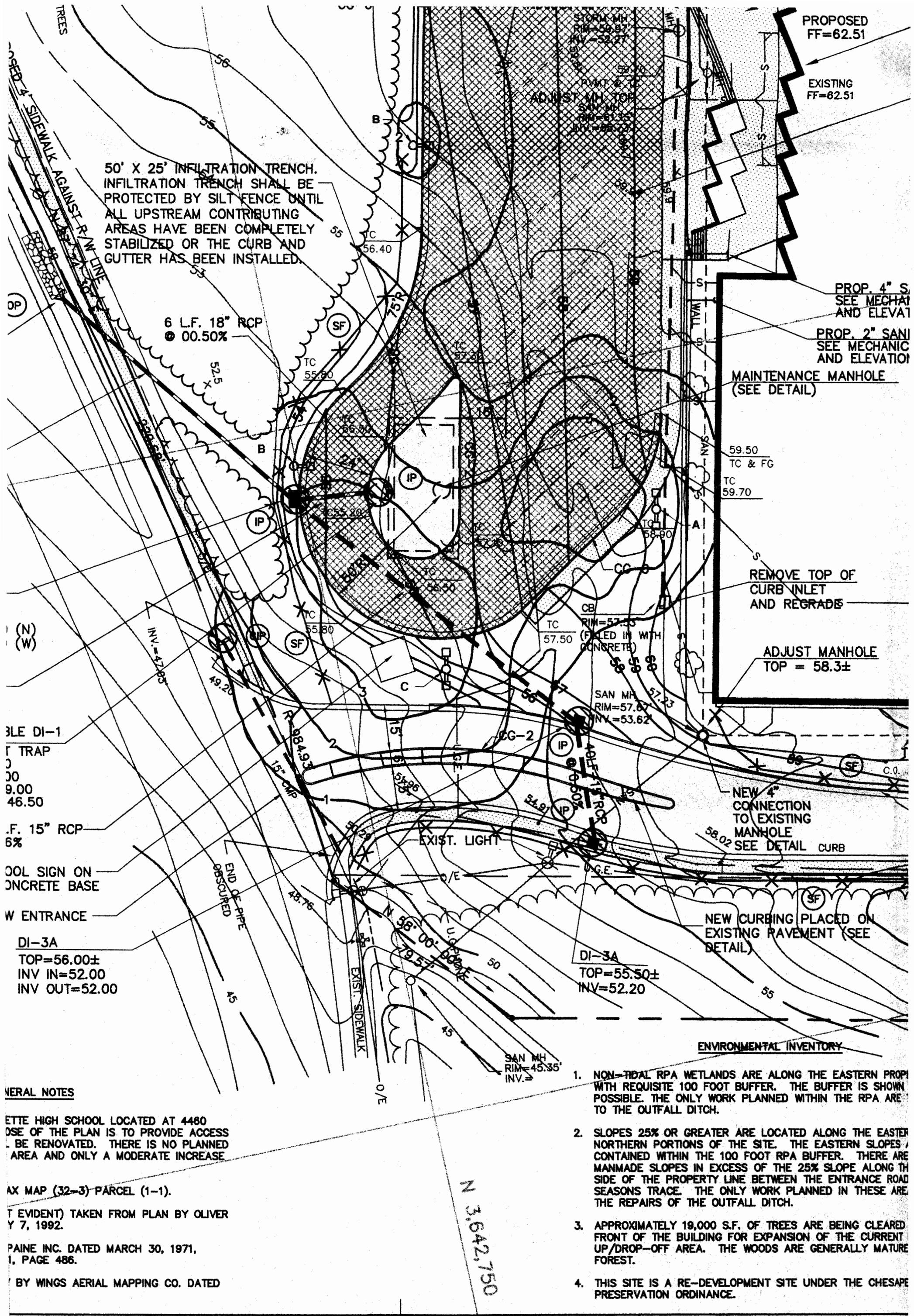

NERAL NOTES

ETTE HIGH SCHOOL LOCATED AT 4460
OSE OF THE PLAN IS TO PROVIDE ACCESS
. BE RENOVATED. THERE IS NO PLANNED
AREA AND ONLY A MODERATE INCREASE

AX MAP (32-3) PARCEL (1-1).

T EVIDENT) TAKEN FROM PLAN BY OLIVER
Y 7, 1992.

PAINE INC. DATED MARCH 30, 1971,
1, PAGE 486.

BY WINGS AERIAL MAPPING CO. DATED

ENVIRONMENTAL INVENTORY

1. NON-TIDAL RPA WETLANDS ARE ALONG THE EASTERN PROP WITH REQUISITE 100 FOOT BUFFER. THE BUFFER IS SHOWN POSSIBLE. THE ONLY WORK PLANNED WITHIN THE RPA ARE TO THE OUTFALL DITCH.

2. SLOPES 25% OR GREATER ARE LOCATED ALONG THE EASTER NORTHERN PORTIONS OF THE SITE. THE EASTERN SLOPES CONTAINED WITHIN THE 100 FOOT RPA BUFFER. THERE ARE MANMADE SLOPES IN EXCESS OF THE 25% SLOPE ALONG TH SIDE OF THE PROPERTY LINE BETWEEN THE ENTRANCE ROAD SEASONS TRACE. THE ONLY WORK PLANNED IN THESE ARE THE REPAIRS OF THE OUTFALL DITCH.

3. APPROXIMATELY 19,000 S.F. OF TREES ARE BEING CLEARED FRONT OF THE BUILDING FOR EXPANSION OF THE CURRENT UP/DROP-OFF AREA. THE WOODS ARE GENERALLY MATURE FOREST.

4. THIS SITE IS A RE-DEVELOPMENT SITE UNDER THE CHESAPE PRESERVATION ORDINANCE.

SITE INFORMATION

ZONING:	R-4
TAX MAP NUMBER:	36-3
PARCEL NUMBER:	1-23
SITE AREA:	4.01 ACRES
OPEN SPACE:	3.28 ACRES (82.0%)
BUILDING COVERAGE:	6,544 S.F. (3.75%)
SUPPLY FIXTURE UNITS	75 SFU
DRAINAGE FIXTURE UNITS	79 DFU
AVERAGE DOMESTIC FLOW	37 GPM
PEAK DOMESTIC FLOW	57 GPM
REQUIRED FIRE FLOW	600 GPM
AVERAGE SEWER FLOW	1.14 GPM

5-9-99
JR057

THE PROPERTY SHOWN HEREON APPEARS TO FALL OUTSIDE THE SPECIAL FLOOD HAZARD AREA IN JAMES CITY COUNTY, VA
COMMUNITY-PANEL NUMBER 510201 0003 A
MAP REVISED: SEPTEMBER 24, 1982

REFERENCE: NATIONAL FLOOD INSURANCE PROGRAM
FLOOD HAZARD BOUNDARY MAP FOR
JAMES CITY COUNTY, VIRGINIA

COMMONWEALTH OF VIRGINIA
C. SCOTT ACCY
No. 025102
12/21/99
PROFESSIONAL ENGINEER

THE TAF GROUP

NOTE: ONLY SATISFACTORY SOIL MATERIALS AS DEFINED IN THE SPECIFICATIONS SHALL BE UTILIZED AS FILL FOR THE CONSTRUCTION OF THE DETENTION BASIN. COMPACTION SHALL BE IN ACCORDANCE WITH THE SPECIFICATIONS. UPON COMPLETION, THE CONSTRUCTION OF THE DETENTION BASIN SHALL BE CERTIFIED BY A PROFESSIONAL ENGINEER WHO HAS INSPECTED THE STRUCTURE DURING CONSTRUCTION.

PROVIDE SOIL STABILIZATION BLANKET ON ALL DENUDED SLOPES

EMERGENCY SPILLWAY CREST ELEV. = 56.80

ANTI-SEEP COLLAR

0-18" RCP @ 0.00%

1'-3" DIA. PERFORATED PVC PIPE IN NO. 57 BMP STONE BED

OUTLET CONTROL STRUCTURE
RIM=56.5
INV.=53.50
(SEE DETAIL, SHEET C- 4)

16 SY CLASS I RIP RAP DEPTH=2'

INV.=53.5

120'-12" RCP CL III @ 2.17%

127'-12" RCP CL III @ 0.40%

148'-12" SD @ 1.41%

37'-12" RCP CL III @1.11%

FUTURE STORAGE SHED, FF TO BE DETERMINED

FF=62.00

RAIN GARDEN PER PRIDE DEMO.

TEMPORARY STAGING/STOCKPILE AREA

LIMITS OF CLEARING

50' R/W EASEMENT

RIP RAP

WIPE DOWN C

S25°58'34"E 430.30'

S64°05'41"W 314.96'

L=55.02' R=35.00

I.R.F.

OF WOODLINE

JR057_JCC_FIRE_STATION_5 - 007

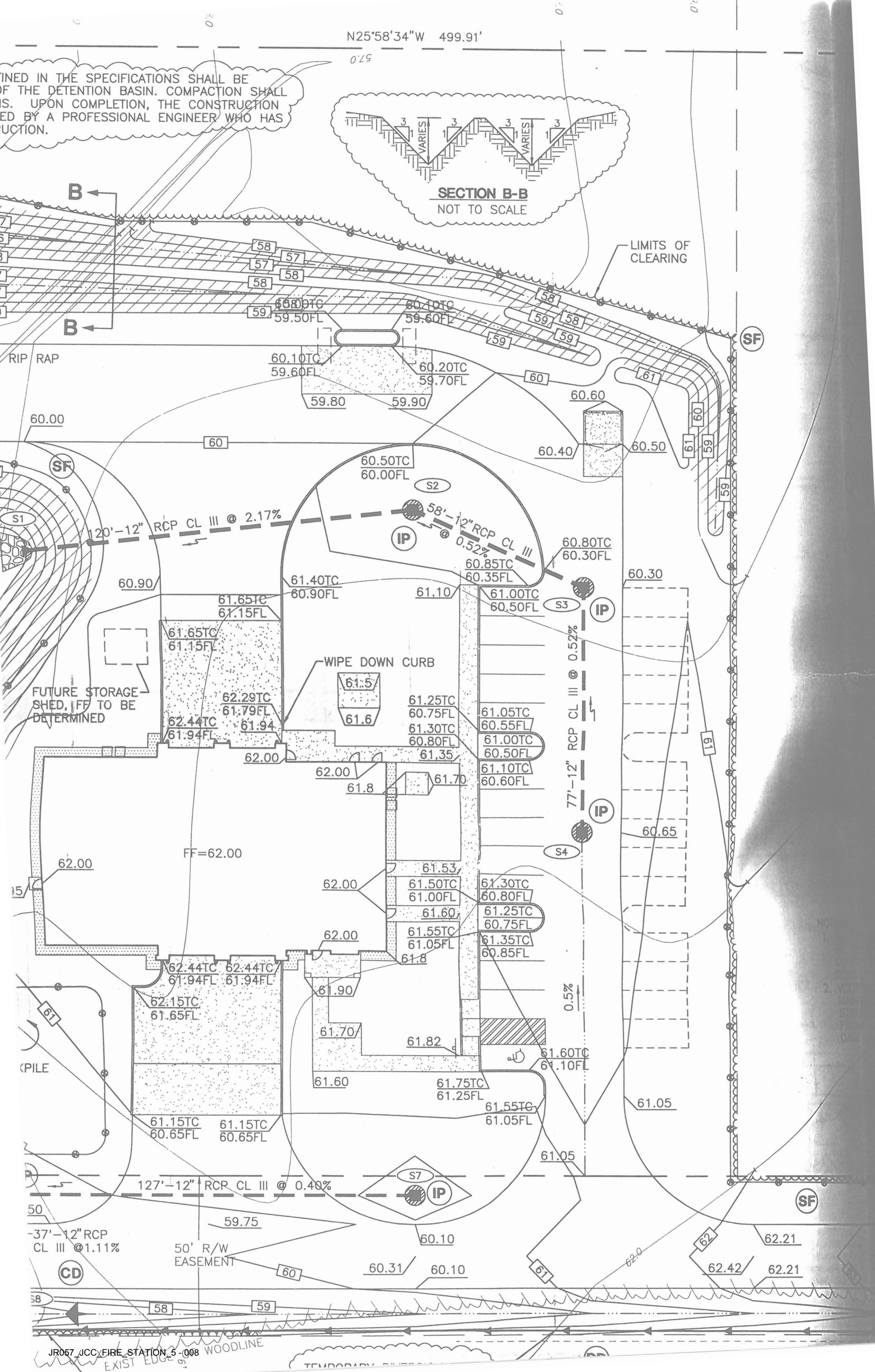
N25°58'34"W 499.91'
TINED IN THE SPECIFICATIONS SHALL BE
OF THE DETENTION BASIN. COMPACTION SHALL
IS. UPON COMPLETION, THE CONSTRUCTION
ED BY A PROFESSIONAL ENGINEER WHO HAS
UCTION.
SECTION B-B
NOT TO SCALE
VARIES
LIMITS OF CLEARING
RIP RAP
60.10TC
59.60FL
60.20TC
59.70FL
59.80
59.90
60.60
60.40
60.50
60.00
60.50TC
60.00FL
S2
58'-12" RCP CL III @ 0.52%
120'-12" RCP CL III @ 2.17%
IP
60.80TC
60.30FL
60.85TC
60.35FL
60.30
60.90
61.40TC
60.90FL
61.10
61.00TC
60.50FL
S3
61.65TC
61.15FL
WIPE DOWN CURB
61.5
61.6
FUTURE STORAGE SHED, FF TO BE DETERMINED
62.29TC
61.79FL
62.44TC
61.94FL
61.94
61.25TC
60.75FL
61.05TC
60.55FL
61.30TC
60.80FL
61.00TC
60.50FL
61.35
62.00
61.10TC
60.60FL
61.8
61.70
77'-12" RCP CL III @ 0.52%
60.65
S4
FF=62.00
61.53
61.50TC
61.00FL
61.30TC
60.80FL
61.60
61.25TC
60.75FL
61.55TC
61.05FL
61.35TC
60.85FL
0.5%
62.15TC
61.65FL
61.90
61.70
61.82
61.60TC
61.10FL
61.60
61.75TC
61.25FL
61.55TC
61.05FL
61.05
61.15TC
60.65FL
127'-12" RCP CL III @ 0.40%
S7
59.75
60.10
62.21
62.42
37'-12" RCP
CL III @1.11%
50' R/W
EASEMENT
60.31
CD
SF
WOODLINE
EXIST EDGE OF

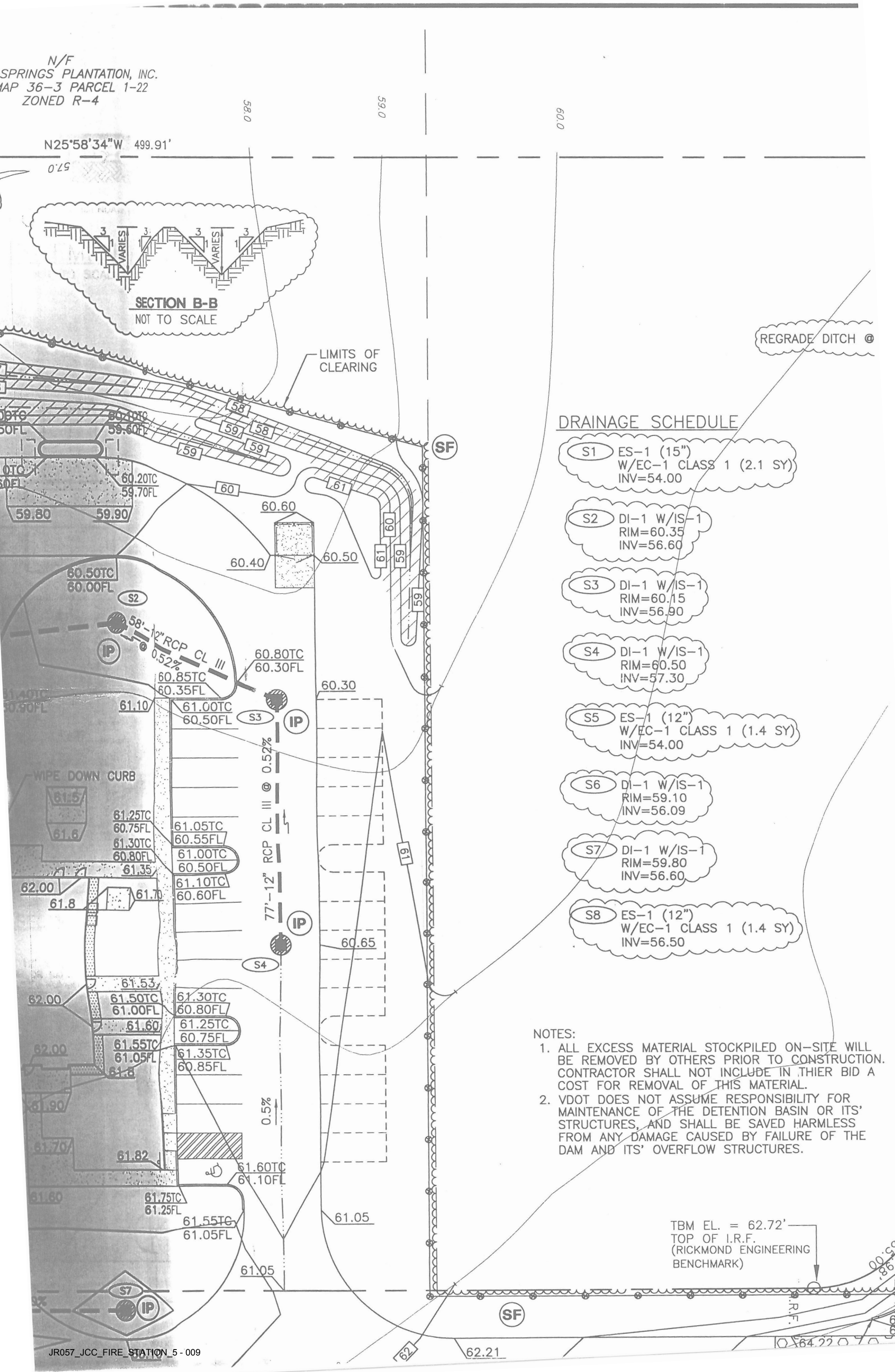
N/F
SPRINGS PLANTATION, INC.
MAP 36-3 PARCEL 1-22
ZONED R-4
N25°58'34"W 499.91'
SECTION B-B
NOT TO SCALE
VARIES
LIMITS OF CLEARING
REGRADE DITCH @
DRAINAGE SCHEDULE
S1 ES-1 (15") W/EC-1 CLASS 1 (2.1 SY) INV=54.00
S2 DI-1 W/IS-1 RIM=60.35 INV=56.60
S3 DI-1 W/IS-1 RIM=60.15 INV=56.90
S4 DI-1 W/IS-1 RIM=60.50 INV=57.30
S5 ES-1 (12") W/EC-1 CLASS 1 (1.4 SY) INV=54.00
S6 DI-1 W/IS-1 RIM=59.10 INV=56.09
S7 DI-1 W/IS-1 RIM=59.80 INV=56.60
S8 ES-1 (12") W/EC-1 CLASS 1 (1.4 SY) INV=56.50
58'-12" RCP CL III @ 0.52%
77'-12" RCP CL III @ 0.52%
0.5%
WIPE DOWN CURB
TBM EL. = 62.72'
TOP OF I.R.F.
(RICKMOND ENGINEERING BENCHMARK)
NOTES:
1. ALL EXCESS MATERIAL STOCKPILED ON-SITE WILL BE REMOVED BY OTHERS PRIOR TO CONSTRUCTION. CONTRACTOR SHALL NOT INCLUDE IN THIER BID A COST FOR REMOVAL OF THIS MATERIAL.
2. VDOT DOES NOT ASSUME RESPONSIBILITY FOR MAINTENANCE OF THE DETENTION BASIN OR ITS' STRUCTURES, AND SHALL BE SAVED HARMLESS FROM ANY DAMAGE CAUSED BY FAILURE OF THE DAM AND ITS' OVERFLOW STRUCTURES.

PREMOLDED JOINT FILLER

BARS @ 16" O.C.

BOLLARD

NOT TO SCALE

CONCRETE APRON EXPANSION JOINT

NOT TO SCALE

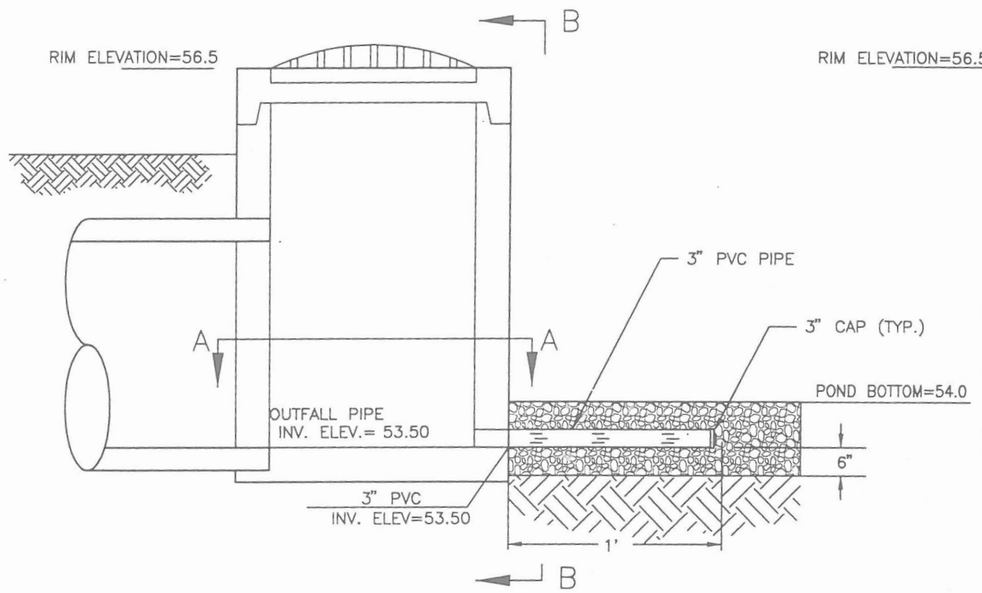

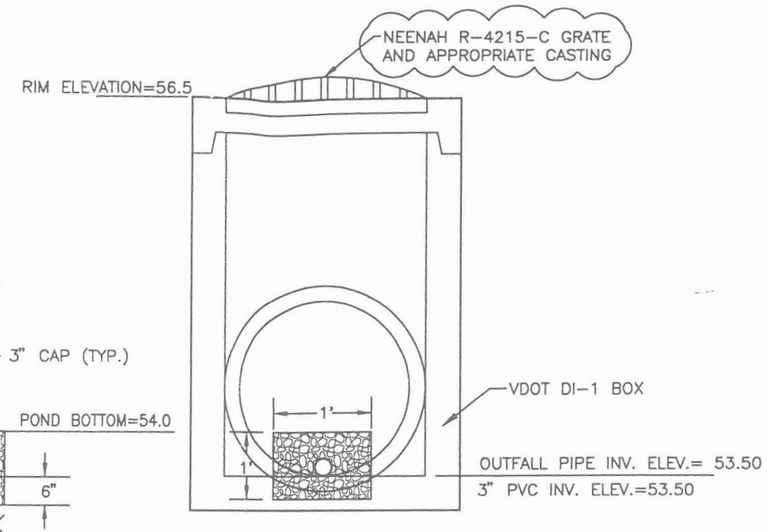

SECTION B-B

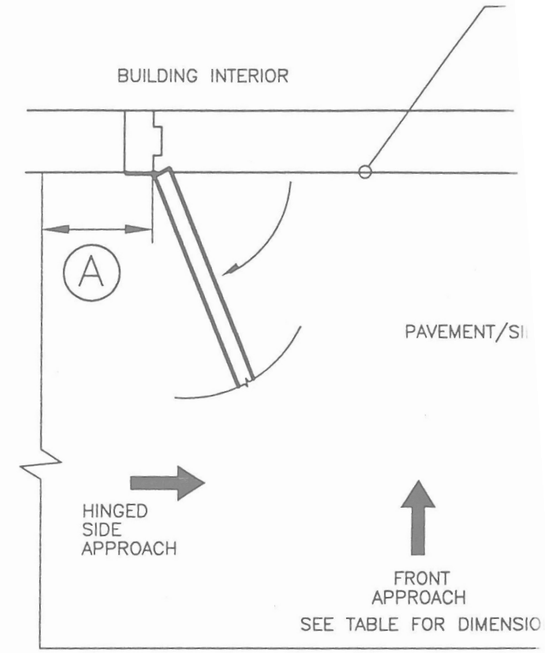

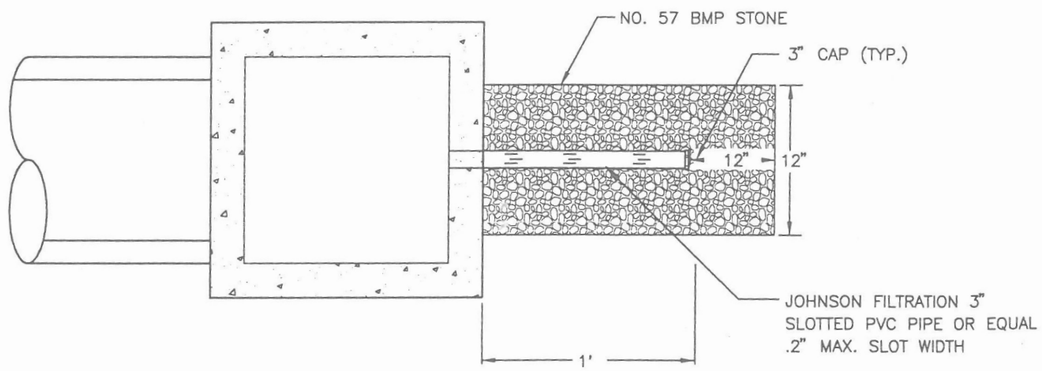

SECTION A-A

DRY DETENTION OUTLET STRUCTURE

FS5drydt

NOT TO SCALE

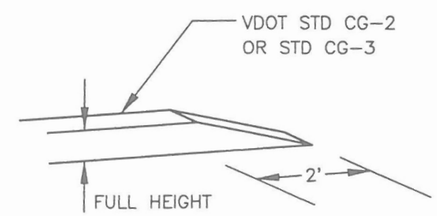

CURB WIPE DOWN DETAIL

NOT TO SCALE

TABLE OF DIM		
APPROACH	A	
FRONT	6" MIN.	1
HINGED SIDE	-----	3
HINGED SIDE	-----	4
LATCH SIDE	6" MIN.	2
LATCH SIDE (WITH CLOSER)	6" MIN.	2

TYPICAL ACCE PAVED DOORW

NOT TO SCALE

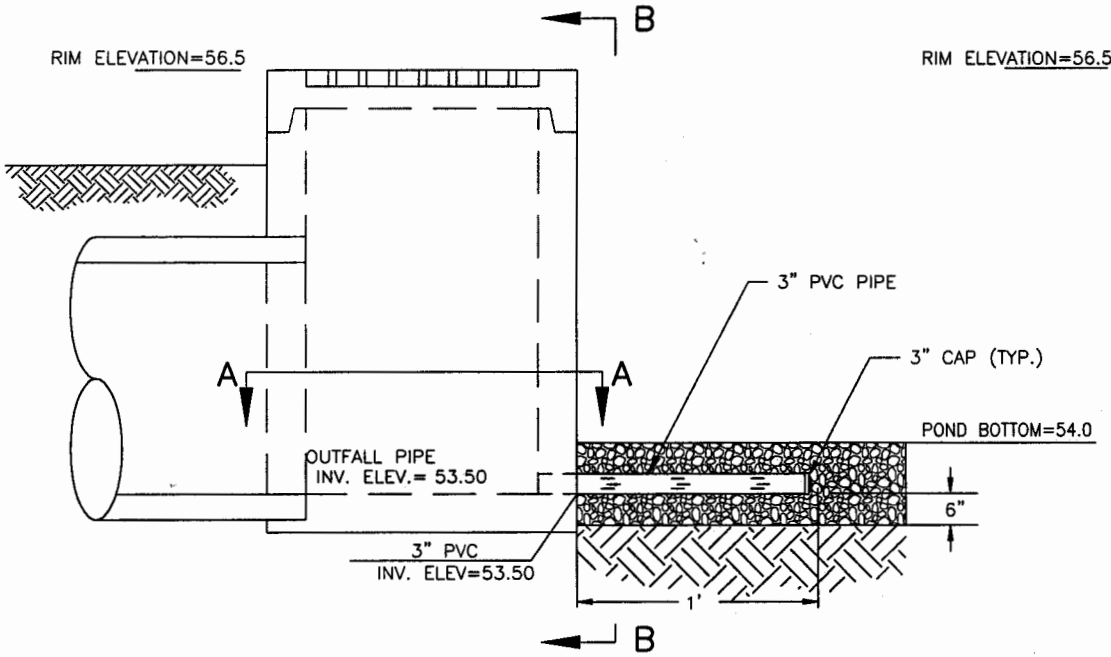

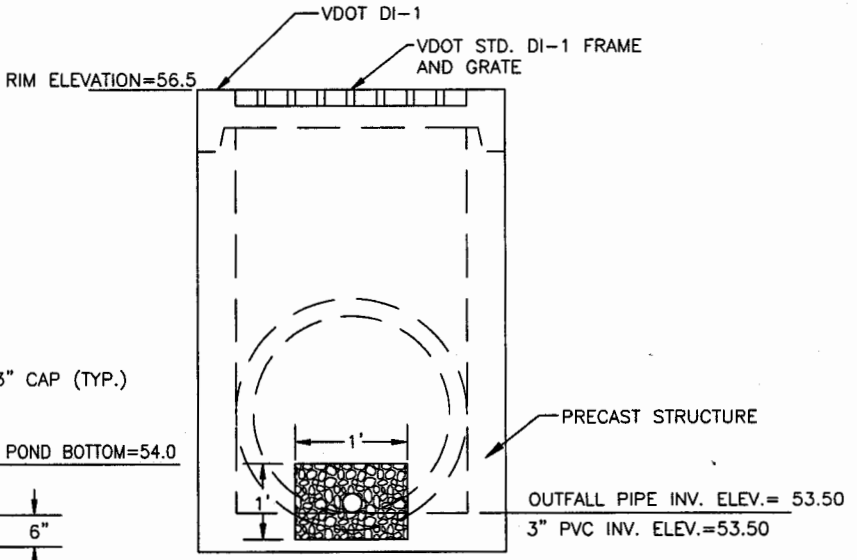

SECTION B-B

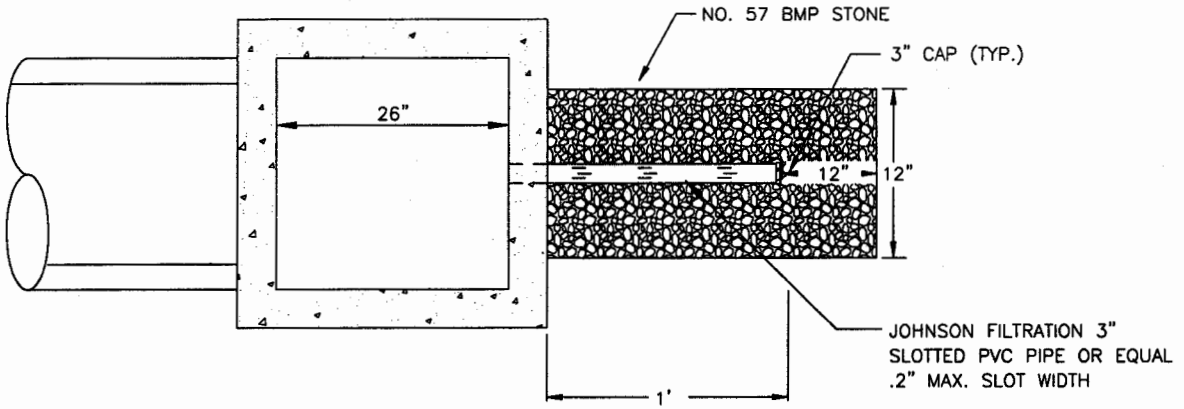

SECTION A-A

DRY DETENTION OUTLET STRUCTURE

FS5drydt

NOT TO SCALE

BRN REPORTS

2 inch Circular Orifice - 1-yr Storm Event

Project C:\HSS DATA\980440.WBS\2IN-1YR.BRN
Last Revised on Mon Jul 26 13:43:44 1999
Run of Mon Jul 26 13:43:50 1999 (Status = CONVERGED)

Project Contains 4 Paths.
Project Contains 4 Nodes.

Path	Up Stream Node Name	Down Stream Node Name	Path Type
0	SUBAREA	POND	DIRECT
1	POND	J1	VERT GATE
2	J1	OUT	PIPE
3	POND	OUT	BREACH

Node	Name	Node Type
0	POND	POND
1	OUT	STAGING
2	SUBAREA	SUBAREA
3	J1	JUNCTION

Node	Name	Node Type	Min El.	at Hr.	Max El.	at Hr.	Flooded
0	POND	POND	54.00	0.00	55.76	16.20	NO
1	OUT	STAGING	54.00	0.00	54.00	0.00	NO
2	SUBAREA	SUBAREA	58.00	0.00	58.00	0.00	NO
3	J1	JUNCTION	54.00	0.00	54.12	16.20	NO

Node	Name	Maximum CFS Inflow	Maximum CFS Outflow
0	POND	3.56 @ 12.00 Hours	0.13 @ 16.20 Hours
1	OUT	0.13 @ 16.20 Hours	0.00 @ 0.00 Hours
2	SUBAREA	3.56 @ 12.00 Hours	3.56 @ 12.00 Hours
3	J1	0.13 @ 16.20 Hours	0.13 @ 16.20 Hours

Report on Paths of Project 2IN-1YR.

```
Path...... 000, DIRECT
Upper Node 002, SUBAREA
Lower Node 000, POND

DIRECT.. ----------|INPUT ID 918060059
                   |T0 CFS..       0.00
                   |T0 CF...       0.00
                   |MAX IN..       3.56
                   |MIN IN..       0.00
                   |MAX OUT.       3.56
                   |MIN OUT.       0.00
                   |
                   |
                   |
                   |
                   |
                   |
                   |
HW PE/KE NO        |FWD K...       0.00
TW PE/KE YES       |REV K...       0.00
HW EL...     58.000|FWD X...       0.00
TW EL...     58.000|REV X...       0.00
```

```
Path...... 001, VERT GATE
Upper Node 000, POND
Lower Node 003, J1

CREST EL     54.000|INPUT ID 932761166
WIDTH...      0.167|T0 CFS..       0.00
HEIGHT..      0.167|T0 CF...       0.00
ORFC C..      0.600|MAX IN..       0.13
SHAPE... CIRCULAR  |MIN IN..      -0.00
FLAPGATE NO        |MAX OUT.       0.13
HANDLE..           |MIN OUT.      -0.00
-------- ---------|
                   |
                   |
                   |
                   |
                   |
                   |
HW PE/KE YES       |FWD K...       0.00
TW PE/KE NO        |REV K...       0.00
MAX HW..     58.000|FWD X...       0.00
MAX TW..     60.000|REV X...       0.00
```

```
Path...... 002, PIPE
Upper Node 003, J1
Lower Node 001, OUT
```

LEN, FT.	30.000	INPUT ID	932760978
MANN N..	0.011	TO CFS..	0.00
RISE, FT	0.500	TO CF...	0.00
SPAN, FT	0.500	MAX IN..	0.13
INLET——	————	MIN IN..	0.00
INVERT..	54.000	MAX OUT.	0.13
ENT KE..	0.200	MIN OUT.	0.00
OUTLET——	————		
INVERT..	53.700		
ENT KE..	0.200		
BW STEPS	0		
HW PE/KE	NO	FWD K...	0.00
TW PE/KE	NO	REV K...	0.00
MAX HW..	60.000	FWD X...	0.00
MAX TW..	60.000	REV X...	0.00

```
Path...... 003, BREACH
Upper Node 000, POND
Lower Node 001, OUT
```

35' on plz

TOP EL..	58.000	INPUT ID	933011024
BOT EL..	56.500	TO CFS..	0.00
BOT W...	2.000	TO CF...	0.00
SIDE Z..	0.333	MAX IN..	0.00
————	————	MIN IN..	0.00
WEIR C..		MAX OUT.	0.00
VEE C...		MIN OUT.	0.00
ORFC C..			
TW RATIO			
APPROACH	————		
DEPTH...			
WIDTH...			
————	————		
HANDLE..			
————	————		
HW PE/KE	YES	FWD K...	0.00
TW PE/KE	NO	REV K...	0.00
MAX HW..	58.000	FWD X...	0.00
MAX TW..	60.000	REV X...	0.00

Report on Nodes of Project 2IN-1YR.

1 yr run. need 10 year & 100-year

Node..... 000, POND

TOP EL...	58.000	TOP AREA.	0.235	INPUT ID.....	933004157
EL.....	57.000	AREA.....	0.195	FLOOD ELEVATION REACHED.....	NO
EL.....	56.000	AREA.....	0.159	INITIAL STAGE ELEVATION.....	54.00
EL.....	55.000	AREA.....	0.133	INITIAL STORAGE, CUBIC FEET..	0.00
EL.....		AREA.....		MAXIMUM STAGE REACHED.....	55.76
EL.....		AREA.....		MINIMUM STAGE REACHED.....	54.00
EL.....		AREA.....		MAXIMUM GROSS STORAGE, CF....	10200.20
EL.....		AREA.....		MAXIMUM DETENTION STORAGE, CF	10200.20
EL.....		AREA.....		FINAL STAGE ELEVATION.....	55.57
EL.....		AREA.....		TIME OF MAXIMUM STAGE, HOURS.	16.20
BOT EL...	54.000	BOT AREA.	0.112	TIME OF MINIMUM STAGE, HOURS.	0.00
TOP LF...		SIDE %PER			
MID LF...		BASE %PER		PEAK NODAL INTAKE, CFS.....	3.56
BOT LF...				TIME OF PEAK INTAKE, HOURS...	12.00
				PEAK NODAL OUTPUT, CFS.....	0.13
				TIME OF PEAK OUTPUT, HOURS...	16.20
BASE CFS.	0.000	STAGE T0.	54.000	POINTS OUT OF TOLERANCE.....	0
X COORD..		Y COORD..		MAXIMUM STAGE ERROR.....	0.00

Node..... 001, STAGING

FLOOD EL.	60.000	PE TO KE.	NO	INPUT ID.....	932744287
				FLOOD ELEVATION REACHED.....	NO
TIME, HRS		STAGE EL.		INITIAL STAGE ELEVATION.....	54.00
TIME, HRS		STAGE EL.		INITIAL STORAGE, CUBIC FEET..	0.00
TIME, HRS		STAGE EL.		MAXIMUM STAGE REACHED.....	54.00
TIME, HRS		STAGE EL.		MINIMUM STAGE REACHED.....	54.00
TIME, HRS		STAGE EL.		MAXIMUM GROSS STORAGE, CF....	0.00
TIME, HRS		STAGE EL.		MAXIMUM DETENTION STORAGE, CF	0.00
TIME, HRS		STAGE EL.		FINAL STAGE ELEVATION.....	54.00
TIME, HRS		STAGE EL.		TIME OF MAXIMUM STAGE, HOURS.	0.00
TIME, HRS		STAGE EL.		TIME OF MINIMUM STAGE, HOURS.	0.00
TIME, HRS		STAGE EL.			
TIME, HRS		STAGE EL.			
				PEAK NODAL INTAKE, CFS.....	0.13
				TIME OF PEAK INTAKE, HOURS...	16.20
				PEAK NODAL OUTPUT, CFS.....	0.00
				TIME OF PEAK OUTPUT, HOURS...	0.00
		STAGE T0.	54.000	POINTS OUT OF TOLERANCE.....	0
X COORD..		Y COORD..		MAXIMUM STAGE ERROR.....	0.00

Node..... 002, SUBAREA

FILE NAME	1YR-POST	FLOOD EL.	58.000	INPUT ID.....	933011011
INPUT ID#	933009271			FLOOD ELEVATION REACHED.....	NO
ALT TYPE.	RNF0002			INITIAL STAGE ELEVATION.....	58.00
RUN, HRS.	25.000			INITIAL STORAGE, CUBIC FEET..	0.00
DT, HRS..	0.500			MAXIMUM STAGE REACHED.....	58.00
DATA PTS.	51			MINIMUM STAGE REACHED.....	58.00
STORM....	SCS_II	RCN?		MAXIMUM GROSS STORAGE, CF....	0.00
HOURS....	24.000			MAXIMUM DETENTION STORAGE, CF	0.00
RAINFALL.	2.800			FINAL STAGE ELEVATION.....	58.00
EXCESS...	1.973			TIME OF MAXIMUM STAGE, HOURS.	0.00
ACREAGE..	2.076			TIME OF MINIMUM STAGE, HOURS.	0.00
TC, HRS..	0.183				
TP, HRS..	12.000				
PEAK CFS.	3.560			PEAK NODAL INTAKE, CFS.....	3.56
ACFT VOL.	0.341			TIME OF PEAK INTAKE, HOURS...	12.00
EXECUTED.	YES			PEAK NODAL OUTPUT, CFS.....	3.56
				TIME OF PEAK OUTPUT, HOURS...	12.00
BASE CFS.	0.000			POINTS OUT OF TOLERANCE.....	0
X COORD..		Y COORD..		MAXIMUM STAGE ERROR.....	0.00

Node..... 003, JUNCTION

FLOOD EL.	60.000	INPUT ID.....	918135315
		FLOOD ELEVATION REACHED.....	NO
		INITIAL STAGE ELEVATION.....	54.00
		INITIAL STORAGE, CUBIC FEET..	0.00
		MAXIMUM STAGE REACHED.....	54.12
		MINIMUM STAGE REACHED.....	54.00
		MAXIMUM GROSS STORAGE, CF....	0.00
		MAXIMUM DETENTION STORAGE, CF	0.00
		FINAL STAGE ELEVATION.....	54.11
		TIME OF MAXIMUM STAGE, HOURS.	16.20
		TIME OF MINIMUM STAGE, HOURS.	0.00
		PEAK NODAL INTAKE, CFS.....	0.13
		TIME OF PEAK INTAKE, HOURS...	16.20
		PEAK NODAL OUTPUT, CFS.....	0.13
		TIME OF PEAK OUTPUT, HOURS...	16.20
BASE CFS.	0.000	POINTS OUT OF TOLERANCE.....	0
X COORD..	Y COORD..	MAXIMUM STAGE ERROR.....	0.00

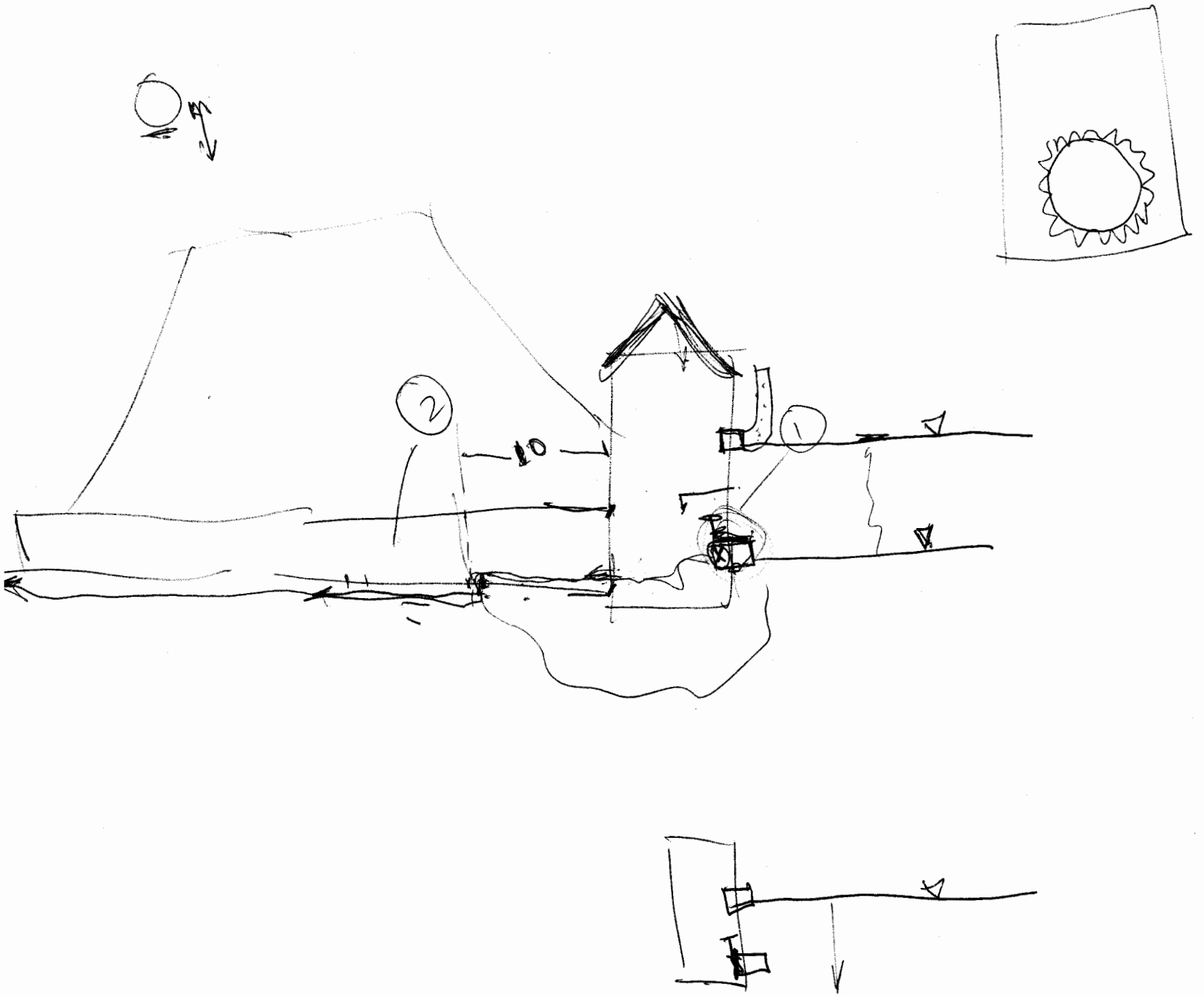
2
10
1

Hydraflow Plan View

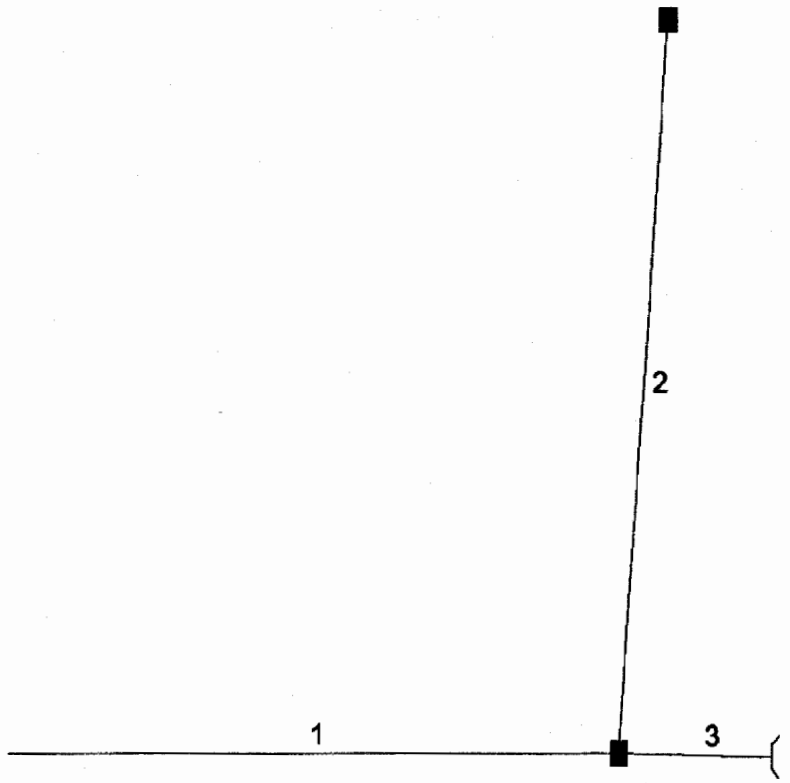

Project file: JCC-East.stm	IDF file: Norfolk.IDF	No. Lines: 3	10-27-1999

Hydraflow Storm Sewer Inventory Report

Line No.	Alignment				Flow Data				Physical Data								Line ID
	Dnstr line No.	Line length (ft)	Defl angle (deg)	Junc type	Known Q (cfs)	Drng area (ac)	Runoff coeff (C)	Inlet time (min)	Invert El Dn (ft)	Line slope (%)	Invert El Up (ft)	Line size (in)	Line type	N value (n)	J-loss coeff (K)	Inlet/ Rim El (ft)	
1	End	148.0	0.0	Grate	0.00	0.24	0.70	10.0	54.00	1.41	56.09	12	Cir	0.013	1.50	59.35	S6-S5
2	1	127.0	-85.0	Grate	0.00	0.19	0.68	10.0	56.09	0.40	56.60	12	Cir	0.013	1.00	59.80	S7-S6
3	1	37.0	1.0	Hdwll	0.00	0.22	0.58	10.0	56.09	1.11	56.50	12	Cir	0.013	1.00	57.50	S8-S6

Project File: JCC-East.stm | I-D-F File: Norfolk.IDF | Total number of lines: 3 | Date: 10-27-1999

Hydraflow Summary Report

Line No.	Line ID	Flow rate (cfs)	Line size (in)	Line length (ft)	Invert EL Dn (ft)	Invert EL Up (ft)	Line slope (%)	HGL down (ft)	HGL up (ft)	Minor loss (ft)	Dns line No.
1	S6-S5	2.37	12 c	148.0	54.00	56.09	1.412	56.71*	57.36*	0.21	End
2	S7-S6	0.77	12 c	127.0	56.09	56.60	0.402	57.58	57.60	0.01	1
3	S8-S6	0.76	12 c	37.0	56.09	56.50	1.108	57.58*	57.59*	0.01	1

SURCH

OK

LESS THAN 50 A OK

OK SJT

Project File: JCC-East.stm	I-D-F File: Norfolk.IDF	Total No. Lines: 3	Run Date: 10-27-1999

NOTES: c = circular; e = elliptical; b = box; Return period = 10 Yrs.; * Indicates surcharge condition.

12/03/99 FRI 16:14 FAX 757 422 3882 TAF GROUP 005

Hydraflow Hydraulic Grade Line Computations

<59.4 ok

Line	Size (in)	Q (cfs)	Downstream Invert elev (ft)	Downstream HGL elev (ft)	Downstream Depth (ft)	Downstream Area (sqft)	Downstream Vel (ft/s)	Downstream Vel head (ft)	Downstream EGL elev (ft)	Downstream Sf (%)	Len (ft)	Upstream Invert elev (ft)	Upstream HGL elev (ft)	Upstream Depth (ft)	Upstream Area (sqft)	Upstream Vel (ft/s)	Upstream Vel head (ft)	Upstream EGL elev (ft)	Upstream Sf (%)	Check Ave Sf (%)	Check Enrgy loss (ft)	JL coeff (K)	Minor loss (ft)
1	12	2.37	54.00	56.71	1.00	0.79	3.01	0.14	56.85	0.442	148	56.09	57.36	1.00	0.79	3.01	0.14	57.50	0.442	0.442	0.654	1.50	0.21
2	12	0.77	56.09	57.58	1.00	0.79	0.98	0.01	57.59	0.046	127	56.60	57.60	1.00	0.79	0.98	0.01	57.61	0.046	0.046	0.058	1.00	0.01
3	12	0.76	56.09	57.58	1.00	0.79	0.96	0.01	57.59	0.045	37.0	56.50	57.59	1.00	0.79	0.96	0.01	57.61	0.045	0.045	0.017	1.00	0.01

<60.10 ok

<59 ok

Project File: JCC-East.stm	I-D-F File: Norfolk.IDF	Total number of lines: 3	Run Date: 10-27-1999

NOTES: Initial tailwater elevation = 56.71 (ft), * Crown depth assumed., ** Critical depth assumed.

Hydraflow Plan View

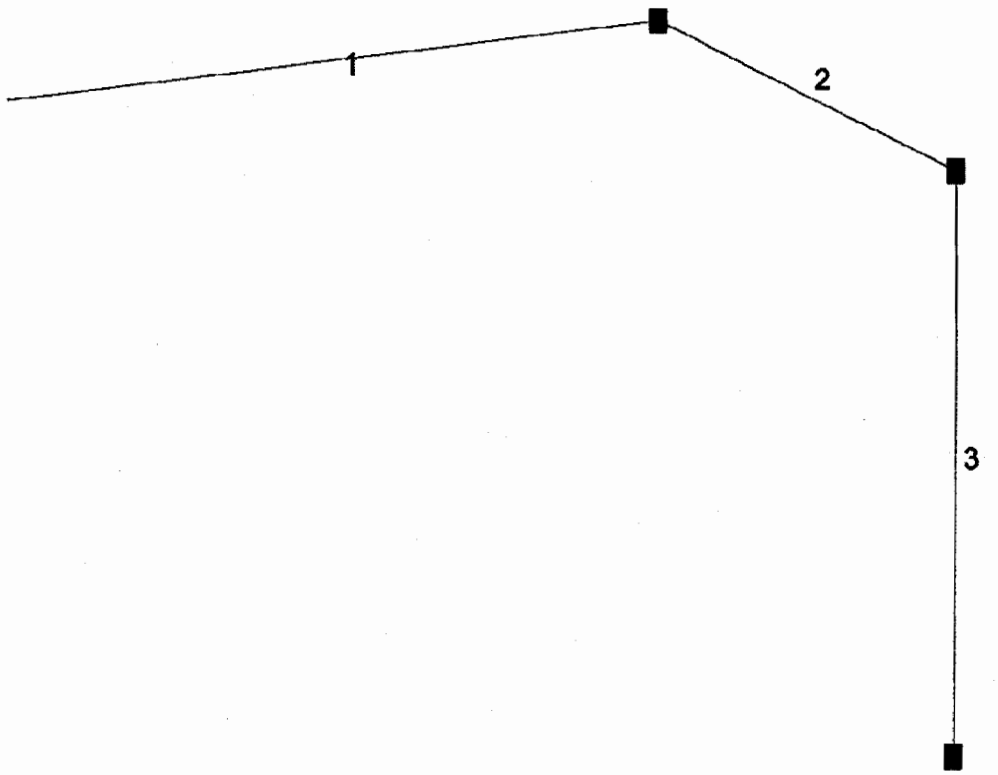

Project file: JCC-West.stm	IDF file: Norfolk.IDF	No. Lines: 3	10-27-1999

Hydraflow Storm Sewer Inventory Report

Line No.	Alignment				Flow Data				Physical Data								Line ID
	Dnstr line No.	Line length (ft)	Defl angle (deg)	Junc type	Known Q (cfs)	Drng area (ac)	Runoff coeff (C)	Inlet time (min)	Invert El Dn (ft)	Line slope (%)	Invert El Up (ft)	Line size (in)	Line type	N value (n)	J-loss coeff (K)	Inlet/ Rim El (ft)	
1	End	120.0	-5.0	Grate	0.00	0.15	0.41	10.0	54.00	2.17	56.60	12	Cir	0.013	0.70	60.35	S2-S1
2	1	58.0	25.0	Grate	0.00	0.15	0.62	10.0	56.60	0.52	56.90	12	Cir	0.013	1.25	60.15	S3-S2
3	2	77.0	70.0	Grate	0.00	0.25	0.62	10.0	56.90	0.52	57.30	12	Cir	0.013	1.00	60.50	S4-S3

OK SAT

Project File: JCC-West.stm	I-D-F File: Norfolk.IDF	Total number of lines: 3	Date: 10-27-1999

Hydraflow Summary Report

Line No.	Line ID	Flow rate (cfs)	Line size (in)	Line length (ft)	Invert EL Dn (ft)	Invert EL Up (ft)	Line slope (%)	HGL down (ft)	HGL up (ft)	Minor loss (ft)	Dns line No.
1	S2-S1	1.76	12 c	120.0	54.00	56.60	2.167	56.71	57.16	0.16	End
2	S3-S2	1.43	12 c	68.0	56.60	56.90	0.517	57.60	57.68	0.09	1
3	S4-S3	0.92	12 c	77.0	56.90	57.30	0.519	57.90	57.95	0.05	2

OK SA

Project File: JCC-West.stm	I-D-F File: Norfolk.IDF	Total No. Lines: 3	Run Date: 10-27-1999

NOTES: c = circular; e = elliptical; b = box; Return period = 10 Yrs.; * Indicates surcharge condition.

Hydraflow Hydraulic Grade Line Computations

Line	Size (in)	Q (cfs)	Downstream Invert elev (ft)	Downstream HGL elev (ft)	Downstream Depth (ft)	Downstream Area (sqft)	Downstream Vel (ft/s)	Downstream Vel head (ft)	Downstream EGL elev (ft)	Downstream Sf (%)	Len (ft)	Upstream Invert elev (ft)	Upstream HGL elev (ft)	Upstream Depth (ft)	Upstream Area (sqft)	Upstream Vel (ft/s)	Upstream Vel head (ft)	Upstream EGL elev (ft)	Upstream Sf (%)	Check Ave Sf (%)	Check Enrgy loss (ft)	JL coeff (K)	Minor loss (ft)
1	12	1.76	54.00	56.71	1.00	0.79	2.25	0.08	56.79	0.245	120	56.60	57.16	0.56**	0.46	3.87	0.23	57.40	0.662	0.454	N/A	0.70	0.16
2	12	1.43	56.60	57.60	1.00*	0.79	1.82	0.05	57.65	0.162	58.0	56.90	57.68	0.78	0.65	2.19	0.07	57.75	0.180	0.171	0.099	1.25	0.09
3	12	0.92	56.90	57.90	1.00*	0.79	1.17	0.02	57.92	0.067	77.0	57.30	57.95	0.65	0.54	1.70	0.05	57.99	0.117	0.092	0.071	1.00	0.05

< 60.5 OK

< 60.3 OK

OK

SURCHARGE S2, S3 & S4 BELOW ROAD OR LITTLE SPREAD

Project File: JCC-West.stm	I-D-F File: Norfolk.IDF	Total number of lines: 3	Run Date: 10-27-1999

NOTES: Initial tailwater elevation = 56.71 (ft), * Crown depth assumed., ** Critical depth assumed.

JAMES CITY COUNTY FIRE STATION # 5

LOW FLOW ORIFICE (PER VA. E. & SCH)

VOLUME 1 YEAR STORM = 14977 ft^3 ✓

FLOW RATE FOR MIN. 24 HR. DRAWDOWN = $\frac{14977\ ft^3}{86400\ sec.}$ = 0.17 CFS

AVG. DRIVING HEAD ON ORIFICE $\left(\frac{\text{TOP RISER} - \text{℄ ORIFICE}}{2}\right)$ = 1.44' ✓

565 5363

X-SECT. AREA REQ'D. = $\frac{0.17}{(64.32 \times 1.44)^{.5}(.6)}$ = .0294 ft^2

DIAMETER ORIFICE REQ'D. = $2 \times \left(\frac{.0294}{3.14}\right)^{.5}$ = .194' = 2.33" → USE 3"Ø

3"Ø = .0491 ft^2 X-SECT. AREA.

FOR # 57 STONE; .2" PERFORATION (MAX. ALLOWABLE)

USE 3"Ø SLOTTED PVC - MAX. WIDTH .2" (CERTAINTEED)

2.4" SLOT LENGTH, .5 SLOT SPACING, 3 ROWS

EA. SLOT = .48 IN^2 = .0033 ft^2

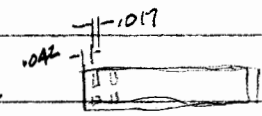

$\frac{.0491\ ft^2}{.0033\ ft^2}$ = 15 SLOTS REQ'D - MIN.

MIN. LENGTH SLOTTED PIPE REQ'D - .3' (3.6")

USE 1'

565-5363

JCC FIRE STATION - DITCH LINING - PER VE & SCH

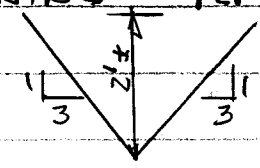

D.A. TO DITCH: 2.3356 AC.
C = .45
T_c = 30 MIN.
I_2 = 2.6 IN/HR
I_{10} = 3.6 IN/HR
Q_2 = 2.73 CFS
Q_{10} = 3.78 CFS

CHANNEL SLOPE = .01 FT/FT

MIN. SIDE SLOPE REQ'D = 3:1

CHANNEL LINING: VEG. - RETARDANCE CLASS D

MAX. PERMISSIBLE VELOCITY = 4 FPS.

@ DEPTH = .87', A = 2.27 #, P = 5.5', R = 0.41

MPV(4) x R(0.41) = 1.64, N = .049

CHECK - $Q = \frac{1.49}{.049} \times 2.27 \times .41^{.67} \times .01^{.5} = 3.80$ CFS - CAPACITY O.K.

VELOCITY (2 YR.)

@ Q = 2.73 CFS, D_N = .77', A = 1.78 FT^2, V = 1.53 FPS.

1.53 FPS < 4 FPS MAX. PERMISSIBLE VELOCITY - O.K. ✓

EC-2

LINE EXPOSED SLOPES W/ JUTE MESH UNTIL VEGETATION ESTABLISHES ITSELF.

JAMES CITY COUNTY FIRE STATION # 5
DITCH CAPACITY AND LINING REQUIREMENTS

DITCH DRAINING SITE @WEST SIDE
DRAINAGE AREA INTO DITCH = 0.40AC.
Tc = 11 MIN.
C = .72
I(2 YR) = 4.5 IN/HR
I(10 YR) = 5.7 IN/HR
Q(2 YR) = 1.30 CFS
Q(10 YR) = 1.64 CFS
DITCH SIDE SLOPE = 3:1
DITCH LONGITUDINAL SLOPE = .01 FT/FT
DEPTH = 2'
N = .05 (VEGETATIVE RETARDANCE C)
MAX PERMISSIBLE VELOCITY = 4 FPS

CAPACITY (10 YR)
@ Q = 1.64 CFS, DEPTH OF FLOW = 64'

VELOCITY (2 YR)
@ Q = 1.30 CFS, DEPTH OF FLOW = .59', VELOCITY = 1.27 FPS
1.27 FPS IS LESS THAN MPV OF 4 FPS **OK**

DIVERSION DITCH @ WEST SIDE
DRAINAGE AREA INTO DITCH = 2.29 AC.
Tc = 29.2 MIN.
C = .27
I(2 YR) =2.6 IN/HR
I(10 YR) = 3.6 IN/HR
Q(2 YR) =1.61 CFS
Q(10 YR) = 2.23 CFS
DITCH SIDE SLOPE = 3:1
DITCH LONGITUDINAL SLOPE = .01 FT/FT
DEPTH VARIES - .75'-3'
N = .05 (VEGETATIVE RETARDANCE C)
MAX PERMISSIBLE VELOCITY = 4 FPS

CAPACITY (10 YR)
@ Q = 2.23 CFS, DEPTH OF FLOW = .72'

VELOCITY (2 YR)
@ Q = 1.61 CFS, DEPTH OF FLOW = .64', VELOCITY = 1.31 FPS

1.31 FPS IS LESS THAN MPV OF 4 FPS **OK**

BRN REPORTS

1 YEAR Storm Event

Project C:\HSS\980440.WBS\1YR_BOX.BRN
Last Revised on Fri Oct 29 07:45:43 1999
Run of Fri Oct 29 07:45:55 1999 (Status = CONVERGED)

Project Contains 4 Paths.
Project Contains 4 Nodes.

Path	Up Stream Node Name	Down Stream Node Name	Path Type
0	SUBAREA	POND	DIRECT
1	POND	J1	ORIFICE
2	J1	OUT	PIPE
3	POND	OUT	BREACH

Node	Name	Node Type
0	POND	POND
1	OUT	STAGING
2	SUBAREA	SUBAREA
3	J1	JUNCTION

Node	Name	Node Type	Min El.	at Hr.	Max El.	at Hr.	Flooded
0	POND	POND	54.00	0.00	56.40	24.00	NO
1	OUT	STAGING	54.00	0.00	54.00	0.00	NO
2	SUBAREA	SUBAREA	58.00	0.00	58.00	0.00	NO
3	J1	JUNCTION	54.00	0.00	54.00	0.00	NO

Node	Name	Maximum CFS Inflow	Maximum CFS Outflow
0	POND	3.33 @ 12.00 Hours	0.00 @ 0.00 Hours
1	OUT	0.00 @ 0.00 Hours	0.00 @ 0.00 Hours
2	SUBAREA	3.33 @ 12.00 Hours	3.33 @ 12.00 Hours
3	J1	0.00 @ 0.00 Hours	0.00 @ 0.00 Hours

Report on Paths of Project 1YR_BOX.

```
Path...... 000, DIRECT
Upper Node 002, SUBAREA
Lower Node 000, POND

DIRECT.. ----------|INPUT ID 918060059
                   |TO CFS..      0.00
                   |TO CF...      0.00
                   |MAX IN..      3.33
                   |MIN IN..      0.00
                   |MAX OUT.      3.33
                   |MIN OUT.      0.00
HW PE/KE NO        |FWD K...      0.00
TW PE/KE YES       |REV K...      0.00
HW EL...    58.000 |FWD X...      0.00
TW EL...    58.000 |REV X...      0.00
```

```
Path...... 001, ORIFICE
Upper Node 000, POND
Lower Node 003, J1

CREST EL    56.500 |INPUT ID 939672956
LENGTH..     2.500 |TO CFS..      0.00
WIDTH...     2.500 |TO CF...      0.00
SHAPE... RECTANGLE |MAX IN..      0.00
PCT OPEN    55.000 |MIN IN..      0.00
WEIR C..     3.200 |MAX OUT.      0.00
ORFC C..     0.600 |MIN OUT.      0.00
HANDLE..
-------- ---------|
HW PE/KE YES       |FWD K...      0.00
TW PE/KE NO        |REV K...      0.00
HW EL...    58.000 |FWD X...      0.00
TW EL...    60.000 |REV X...      0.00
```

AREA DOES NOT CONSIDER BARS/GRATES. 55% OPEN OK

```
Path...... 002, PIPE
Upper Node 003, J1
Lower Node 001, OUT
```

LEN, FT.	30.000	INPUT ID	940601389
MANN N..	0.011	TO CFS..	0.00
RISE, FT	1.500	TO CF...	0.00
SPAN, FT	1.500	MAX IN..	0.00
INLET——		MIN IN..	0.00
INVERT..	53.500	MAX OUT.	0.00
ENT KE..	0.200	MIN OUT.	0.00
OUTLET——			
INVERT..	53.500		
ENT KE..	0.200		
BW STEPS	0		
HW PE/KE	NO	FWD K...	0.00
TW PE/KE	NO	REV K...	0.00
MAX HW..	60.000	FWD X...	0.00
MAX TW..	60.000	REV X...	0.00

BARREL IS AT LEVEL GRADE?

EL 53.5?

```
Path...... 003, BREACH
Upper Node 000, POND
Lower Node 001, OUT
```

TOP EL..	58.000	INPUT ID	941201143
BOT EL..	56.800	TO CFS..	0.00
BOT W...	2.000	TO CF...	0.00
SIDE Z..	3.000	MAX IN..	0.00
		MIN IN..	0.00
WEIR C..		MAX OUT.	0.00
VEE C...		MIN OUT.	0.00
ORFC C..			
TW RATIO			
APPROACH			
DEPTH...			
WIDTH...			
HANDLE..			
HW PE/KE	YES	FWD K...	0.00
TW PE/KE	NO	REV K...	0.00
MAX HW..	58.000	FWD X...	0.00
MAX TW..	60.000	REV X...	0.00

Report on Nodes of Project 1YR_BOX.

Node..... 000, POND

TOP EL...	58.000	TOP AREA.	0.235	INPUT ID.....	933004157
EL.....	57.000	AREA.....	0.195	FLOOD ELEVATION REACHED.....	NO
EL.....	56.000	AREA.....	0.159	INITIAL STAGE ELEVATION.....	54.00
EL.....	55.000	AREA.....	0.133	INITIAL STORAGE, CUBIC FEET..	0.00
EL.....		AREA.....		MAXIMUM STAGE REACHED.....	56.40
EL.....		AREA.....		MINIMUM STAGE REACHED.....	54.00
EL.....		AREA.....		MAXIMUM GROSS STORAGE, CF....	14791.70
EL.....		AREA.....		MAXIMUM DETENTION STORAGE, CF	14791.70
EL.....		AREA.....		FINAL STAGE ELEVATION.....	56.40
EL.....		AREA.....		TIME OF MAXIMUM STAGE, HOURS.	24.00
BOT EL...	54.000	BOT AREA.	0.112	TIME OF MINIMUM STAGE, HOURS.	0.00
TOP LF...		SIDE %PER			
MID LF...		BASE %PER		PEAK NODAL INTAKE, CFS.....	3.33 IN
BOT LF...				TIME OF PEAK INTAKE, HOURS...	12.00
				PEAK NODAL OUTPUT, CFS.....	0.00 OUT
				TIME OF PEAK OUTPUT, HOURS...	0.00
BASE CFS.	0.000	STAGE TO.	54.000	POINTS OUT OF TOLERANCE.....	0
X COORD..		Y COORD..		MAXIMUM STAGE ERROR.....	0.00

Node..... 001, STAGING

FLOOD EL.	60.000	PE TO KE.	NO	INPUT ID.....	932744287
				FLOOD ELEVATION REACHED.....	NO
TIME, HRS		STAGE EL.		INITIAL STAGE ELEVATION.....	54.00
TIME, HRS		STAGE EL.		INITIAL STORAGE, CUBIC FEET..	0.00
TIME, HRS		STAGE EL.		MAXIMUM STAGE REACHED.....	54.00
TIME, HRS		STAGE EL.		MINIMUM STAGE REACHED.....	54.00
TIME, HRS		STAGE EL.		MAXIMUM GROSS STORAGE, CF....	0.00
TIME, HRS		STAGE EL.		MAXIMUM DETENTION STORAGE, CF	0.00
TIME, HRS		STAGE EL.		FINAL STAGE ELEVATION.....	54.00
TIME, HRS		STAGE EL.		TIME OF MAXIMUM STAGE, HOURS.	0.00
TIME, HRS		STAGE EL.		TIME OF MINIMUM STAGE, HOURS.	0.00
TIME, HRS		STAGE EL.			
TIME, HRS		STAGE EL.			
				PEAK NODAL INTAKE, CFS.....	0.00
				TIME OF PEAK INTAKE, HOURS...	0.00
				PEAK NODAL OUTPUT, CFS.....	0.00
				TIME OF PEAK OUTPUT, HOURS...	0.00
		STAGE TO.	54.000	POINTS OUT OF TOLERANCE.....	0
X COORD..		Y COORD..		MAXIMUM STAGE ERROR.....	0.00

Node..... 002, SUBAREA

FILE NAME	1_POST	FLOOD EL.	58.000	INPUT ID.....	940342494
INPUT ID#	939672576			FLOOD ELEVATION REACHED.....	NO
ALT TYPE.	RNF0002			INITIAL STAGE ELEVATION.....	58.00
RUN, HRS.	25.500			INITIAL STORAGE, CUBIC FEET..	0.00
DT, HRS..	0.500			MAXIMUM STAGE REACHED.....	58.00
DATA PTS.	52			MINIMUM STAGE REACHED.....	58.00
STORM....	SCS_II			MAXIMUM GROSS STORAGE, CF....	0.00
HOURS....	24.000			MAXIMUM DETENTION STORAGE, CF	0.00
RAINFALL.	2.800			FINAL STAGE ELEVATION.....	58.00
EXCESS...	1.973			TIME OF MAXIMUM STAGE, HOURS.	0.00
ACREAGE..	2.076			TIME OF MINIMUM STAGE, HOURS.	0.00
TC, HRS..	0.333				
TP, HRS..	12.000				
PEAK CFS.	3.334			PEAK NODAL INTAKE, CFS.....	3.33
ACFT VOL.	0.341			TIME OF PEAK INTAKE, HOURS...	12.00
EXECUTED.	YES			PEAK NODAL OUTPUT, CFS.....	3.33
				TIME OF PEAK OUTPUT, HOURS...	12.00
BASE CFS.	0.000			POINTS OUT OF TOLERANCE.....	0
X COORD..		Y COORD..		MAXIMUM STAGE ERROR.....	0.00

Node..... 003, JUNCTION

FLOOD EL.	60.000			INPUT ID.....	918135315
				FLOOD ELEVATION REACHED.....	NO
				INITIAL STAGE ELEVATION.....	54.00
				INITIAL STORAGE, CUBIC FEET..	0.00
				MAXIMUM STAGE REACHED.....	54.00
				MINIMUM STAGE REACHED.....	54.00
				MAXIMUM GROSS STORAGE, CF....	0.00
				MAXIMUM DETENTION STORAGE, CF	0.00
				FINAL STAGE ELEVATION.....	54.00
				TIME OF MAXIMUM STAGE, HOURS.	0.00
				TIME OF MINIMUM STAGE, HOURS.	0.00
				PEAK NODAL INTAKE, CFS.....	0.00
				TIME OF PEAK INTAKE, HOURS...	0.00
				PEAK NODAL OUTPUT, CFS.....	0.00
				TIME OF PEAK OUTPUT, HOURS...	0.00
BASE CFS.	0.000			POINTS OUT OF TOLERANCE.....	0
X COORD..		Y COORD..		MAXIMUM STAGE ERROR.....	0.00

BRN REPORTS

Post-Development Subarea Runoff Hydrograph - 1 Year Storm Event

UNIT HYDROGRAPH FILE..... SCS_484	FILE.... 1_POST
TOTAL DRAINAGE AREA, ACRES... 2.0756	INPUT ID 939672576
WEIGHTED SCS CURVE NUMBER.... 92.0	TYPE.... RNF0002
INITIAL ABSTRACTION FACTOR... 0.2	RUN, HRS 25.5
TIME OF CONCENTRATION, HOURS. 0.333333	DT, HRS. 0.5
	DATA PTS 52
	STORM... SCS_II
	DURATION 24.0
	RAINFALL 2.8
	EXCESS.. 1.9728315
	ACREAGE. 2.0756
	TC, HRS. 0.333333
	TP, HRS. 12.0
	PEAK CFS 3.3340137 INFLOW
	ACFT VOL 0.341347
	READY... YES
	CFS TOL. 0.001
	HRS TOL. 0.01

Data Pt #	Time Hours	Rainfall Inches	Excess Inches	Raw CFS Load	Final CFS Runoff
0	0.000	0.0000	0.0000	0.000	0.0000
1	0.500	0.0140	0.0000	0.000	0.0000
2	1.000	0.0308	0.0000	0.000	0.0000
3	1.500	0.0476	0.0000	0.000	0.0000
4	2.000	0.0616	0.0000	0.000	0.0000
5	2.500	0.0812	0.0000	0.000	0.0000
6	3.000	0.0980	0.0000	0.000	0.0000
7	3.500	0.1176	0.0000	0.003	0.0000
8	4.000	0.1344	0.0000	0.008	0.0000
9	4.500	0.1568	0.0000	0.016	0.0000
10	5.000	0.1792	0.0000	0.021	0.0000
11	5.500	0.2016	0.0000	0.027	-32.0003
12	6.000	0.2240	0.0000	0.032	0.0000
13	6.500	0.2520	0.0000	0.052	0.0000
14	7.000	0.2800	0.0000	0.055	0.0000
15	7.500	0.3080	0.0000	0.076	0.0000
16	8.000	0.3360	0.0000	0.096	0.0000
17	8.500	0.3752	0.0000	0.136	0.0000
18	9.000	0.4116	0.0000	0.203	0.0000
19	9.500	0.4564	0.0000	0.351	0.0000
20	10.000	0.5068	0.0000	3.566	0.0000
21	10.500	0.5712	0.0000	0.753	0.0000
22	11.000	0.6580	0.0000	0.392	0.0000
23	11.500	0.7924	0.0000	0.288	0.0000
24	12.000	1.8564	0.0000	0.225	0.0000

25	12.500	2.0580	0.0000	0.161	0.0000
26	13.000	2.1616	0.0000	0.162	0.0000
27	13.500	2.2372	0.0000	0.162	0.0000
28	14.000	2.2960	0.0000	0.162	0.0000
29	14.500	2.3380	0.0000	0.098	0.0000
30	15.000	2.3800	0.0000	0.098	0.0000
31	15.500	2.4220	0.0000	0.098	0.0000
32	16.000	2.4640	0.0000	0.098	0.0000
33	16.500	2.4892	0.0000	0.098	0.0000
34	17.000	2.5144	0.0000	0.098	0.0000
35	17.500	2.5396	0.0000	0.098	0.0000
36	18.000	2.5648	0.0000	0.098	0.0000
37	18.500	2.5900	0.0000	0.066	0.0000
38	19.000	2.6152	0.0000	0.066	0.0000
39	19.500	2.6404	0.0000	0.066	0.0000
40	20.000	2.6656	0.0000	0.066	0.0000
41	20.500	2.6824	0.0000	0.066	0.0000
42	21.000	2.6992	0.0000	0.066	0.0000
43	21.500	2.7160	0.0000	0.066	0.0000
44	22.000	2.7328	0.0000	0.066	0.0000
45	22.500	2.7496	0.0000	0.000	0.0000
46	23.000	2.7664	0.0000	0.000	0.0000
47	23.500	2.7832	0.0000	0.000	0.0000
48	24.000	2.8000	0.0000	0.000	0.0000
49	24.500	2.8000	0.0000	0.000	0.0000
50	25.000	2.8000	0.0000	0.000	0.0000
51	25.500	2.8000	0.0000	0.000	0.0000
52	26.000	2.8000	0.0000	0.000	0.0000
53	26.500	2.8000	0.0000	0.000	0.0000
54	27.000	2.8000	0.0000	0.000	0.0000
55	27.500	2.8000	0.0000	0.000	0.0000
56	28.000	2.8000	0.0000	0.000	0.0000
57	28.500	2.8000	0.0000	0.000	0.0000
58	29.000	2.8000	0.0000	0.000	0.0000
59	29.500	2.8000	0.0000	0.000	0.0000
60	30.000	2.8000	0.0000	0.000	0.0000
61	30.500	2.8000	0.0000	0.000	0.0000
62	31.000	2.8000	0.0000	0.000	0.0000
63	31.500	2.8000	0.0000	0.001	0.0000
64	32.000	2.8000	0.0000	0.003	0.0000
65	32.500	2.8000	0.0000	0.006	0.0000
66	33.000	2.8000	0.0000	0.012	0.0000
67	33.500	2.8000	0.0000	0.018	0.0000
68	34.000	2.8000	0.0000	0.025	0.0000
69	34.500	2.8000	0.0000	0.038	0.0000
70	35.000	2.8000	0.0000	0.051	0.0000
71	35.500	2.8000	0.0000	0.069	0.0000
72	36.000	2.8000	0.0000	0.092	0.0000
73	36.500	2.8000	0.0000	0.125	0.0000
74	37.000	2.8000	0.0000	0.173	0.0000
75	37.500	2.8000	0.0000	0.257	0.0000
76	38.000	2.8000	0.0000	1.109	0.0000
77	38.500	2.8000	0.0000	1.289	0.0000

78	39.000	2.8000	0.0000	1.383	0.0000
79	39.500	2.8000	0.0000	1.452	0.0000
80	40.000	2.8000	0.0000	1.505	0.0000
81	40.500	2.8000	0.0000	1.544	0.0000
82	41.000	2.8000	0.0000	1.582	0.0000
83	41.500	2.8000	0.0000	1.621	0.0000
84	42.000	2.8000	0.0000	1.660	0.0000
85	42.500	2.8000	0.0000	1.683	0.0000
86	43.000	2.8000	0.0000	1.706	0.0000
87	43.500	2.8000	0.0000	1.730	0.0000
88	44.000	2.8000	0.0000	1.753	0.0000
89	44.500	2.8000	0.0000	1.777	0.0000
90	45.000	2.8000	0.0000	1.800	0.0000
91	45.500	2.8000	0.0000	1.824	0.0000
92	46.000	2.8000	0.0000	1.847	0.0000
93	46.500	2.8000	0.0000	1.863	0.0000
94	47.000	2.8000	0.0000	1.878	0.0000
95	47.500	2.8000	0.0000	1.894	0.0000
96	48.000	2.8000	0.0000	1.910	0.0000
97	48.500	2.8000	0.0000	1.926	0.0000
98	49.000	2.8000	0.0000	1.941	0.0000
99	49.500	2.8000	0.0000	1.957	0.0000
100	50.000	2.8000	0.0000	1.973	0.0000
101	50.500	2.8000	0.0000	1.973	0.0000
102	51.000	2.8000	0.0000	1.973	0.0000
103	51.500	2.8000	0.0000	1.973	0.0000
104	52.000	2.8000	0.0000	0.000	0.0000
105	52.500	2.8000	0.0000	0.000	0.0000
106	53.000	2.8000	0.0000	3364.200	0.0000
107	53.500	2.8000	0.0000	0.000	0.0000
108	54.000	2.8000	0.0000	0.000	0.0000
109	54.500	2.8000	0.0000	0.014	0.0000
110	55.000	2.8000	0.0000	0.031	0.0000
111	55.500	2.8000	0.0000	0.048	0.0000
112	56.000	2.8000	0.0000	0.062	0.0000
113	56.500	2.8000	0.0000	0.081	0.0000
114	57.000	2.8000	0.0000	0.098	0.0000
115	57.500	2.8000	0.0000	0.118	0.0000
116	58.000	2.8000	0.0000	0.134	0.0000
117	58.500	2.8000	0.0000	0.157	0.0000
118	59.000	2.8000	0.0000	0.179	0.0000
119	59.500	2.8000	0.0000	0.202	0.0000
120	60.000	2.8000	0.0000	0.224	0.0000
121	60.500	2.8000	0.0000	0.252	0.0000
122	61.000	2.8000	0.0000	0.280	0.0000
123	61.500	2.8000	0.0000	0.308	0.0000
124	62.000	2.8000	0.0000	0.336	0.0000
125	62.500	2.8000	0.0000	0.375	0.0000
126	63.000	2.8000	0.0000	0.412	0.0000
127	63.500	2.8000	0.0000	0.456	0.0000
128	64.000	2.8000	0.0000	0.507	0.0000
129	64.500	2.8000	0.0000	0.571	0.0000
130	65.000	2.8000	0.0000	0.658	0.0000

131	65.500	2.8000	0.0000	0.792	0.0000
132	66.000	2.8000	0.0000	1.856	0.0000
133	66.500	2.8000	0.0000	2.058	0.0000
134	67.000	2.8000	0.0000	2.162	0.0000
135	67.500	2.8000	0.0000	2.237	0.0000
136	68.000	2.8000	0.0000	2.296	0.0000
137	68.500	2.8000	0.0000	2.338	0.0000
138	69.000	2.8000	0.0000	2.380	0.0000
139	69.500	2.8000	0.0000	2.422	0.0000
140	70.000	2.8000	0.0000	2.464	0.0000
141	70.500	2.8000	0.0000	2.489	0.0000
142	71.000	2.8000	0.0000	2.514	0.0000
143	71.500	2.8000	0.0000	2.540	0.0000
144	72.000	2.8000	0.0000	2.565	0.0000
145	72.500	2.8000	0.0000	2.590	0.0000
146	73.000	2.8000	0.0000	2.615	0.0000

BRN REPORTS

10 YEAR Storm Event

Project C:\HSS\980440.WBS\10YR_BOX.BRN
Last Revised on Fri Oct 29 07:46:14 1999
Run of Fri Oct 29 07:46:19 1999 (Status = CONVERGED)

Project Contains 4 Paths.
Project Contains 4 Nodes.

Path	Up Stream Node Name	Down Stream Node Name	Path Type
0	SUBAREA	POND	DIRECT
1	POND	J1	ORIFICE
2	J1	OUT	PIPE
3	POND	OUT	BREACH

Node	Name	Node Type
0	POND	POND
1	OUT	STAGING
2	SUBAREA	SUBAREA
3	J1	JUNCTION

Node	Name	Node Type	Min El.	at Hr.	Max El.	at Hr.	Flooded
0	POND	POND	54.00	0.00	56.71	12.40	NO
1	OUT	STAGING	54.00	0.00	54.00	0.00	NO
2	SUBAREA	SUBAREA	58.00	0.00	58.00	0.00	NO
3	J1	JUNCTION	54.00	0.00	54.38	12.40	NO

Node	Name	Maximum CFS Inflow	Maximum CFS Outflow	
0	POND	6.84 @ 12.00 Hours	2.99 @ 12.40 Hours	OUTFLOW
1	OUT	2.99 @ 12.40 Hours	0.00 @ 0.00 Hours	
2	SUBAREA	6.84 @ 12.00 Hours	6.84 @ 12.00 Hours	INFLOW
3	J1	2.99 @ 12.40 Hours	2.99 @ 12.40 Hours	

Report on Paths of Project 10YR_BOX.

Path..... 000, DIRECT
Upper Node 002, SUBAREA
Lower Node 000, POND

DIRECT..		INPUT ID	918060059
		TO CFS..	0.00
		TO CF...	0.00
		MAX IN..	6.84
		MIN IN..	0.00
		MAX OUT.	6.84
		MIN OUT.	0.00
HW PE/KE	NO	FWD K...	0.00
TW PE/KE	YES	REV K...	0.00
HW EL...	58.000	FWD X...	0.00
TW EL...	58.000	REV X...	0.00

Path..... 001, ORIFICE
Upper Node 000, POND
Lower Node 003, J1

LIKE CRST.

CREST EL	56.500	INPUT ID	939672956
LENGTH..	2.500	TO CFS..	0.00
WIDTH...	2.500	TO CF...	0.00
SHAPE...	RECTANGLE	MAX IN..	2.99
PCT OPEN	55.000	MIN IN..	0.00
WEIR C..	3.200	MAX OUT.	2.99
ORFC C..	0.600	MIN OUT.	0.00
HANDLE..			
HW PE/KE	YES	FWD K...	0.00
TW PE/KE	NO	REV K...	0.00
HW EL...	58.000	FWD X...	0.00
TW EL...	60.000	REV X...	0.00

Path.....	002, PIPE		
Upper Node	003, J1		
Lower Node	001, OUT		
LEN, FT.	30.000	INPUT ID	940601480
MANN N..	0.011	TO CFS..	0.00
RISE, FT	1.500	TO CF...	0.00
SPAN, FT	1.500	MAX IN..	2.99
INLET		MIN IN..	0.00
INVERT..	53.500	MAX OUT.	2.99
ENT KE..	0.200	MIN OUT.	0.00
OUTLET			
INVERT..	53.500		
ENT KE..	0.200		
BW STEPS	0		
HW PE/KE	NO	FWD K...	0.00
TW PE/KE	NO	REV K...	0.00
MAX HW..	60.000	FWD X...	0.00
MAX TW..	60.000	REV X...	0.00

BARREL @ LEVEL GRADE.

Path.....	003, BREACH		
Upper Node	000, POND		
Lower Node	001, OUT		
TOP EL..	58.000	INPUT ID	941201174
BOT EL..	56.800	TO CFS..	0.00
BOT W...	2.000	TO CF...	0.00
SIDE Z..	3.000	MAX IN..	0.00
		MIN IN..	0.00
WEIR C..		MAX OUT.	0.00
VEE C...		MIN OUT.	0.00
ORFC C..			
TW RATIO			
APPROACH			
DEPTH...			
WIDTH...			
HANDLE..			
HW PE/KE	YES	FWD K...	0.00
TW PE/KE	NO	REV K...	0.00
MAX HW..	58.000	FWD X...	0.00
MAX TW..	60.000	REV X...	0.00

E.S.

Report on Nodes of Project 10YR_BOX.

Node..... 000, POND

TOP EL...	58.000	TOP AREA.	0.235	INPUT ID.....	933004157
EL.....	57.000	AREA.....	0.195	FLOOD ELEVATION REACHED.....	NO
EL.....	56.000	AREA.....	0.159	INITIAL STAGE ELEVATION.....	54.00
EL.....	55.000	AREA.....	0.133	INITIAL STORAGE, CUBIC FEET..	0.00
EL.....		AREA.....		MAXIMUM STAGE REACHED.....	56.71
EL.....		AREA.....		MINIMUM STAGE REACHED.....	54.00
EL.....		AREA.....		MAXIMUM GROSS STORAGE, CF....	17163.40
EL.....		AREA.....		MAXIMUM DETENTION STORAGE, CF	17163.40
EL.....		AREA.....		FINAL STAGE ELEVATION.....	56.52
EL.....		AREA.....		TIME OF MAXIMUM STAGE, HOURS.	12.40
BOT EL...	54.000	BOT AREA.	0.112	TIME OF MINIMUM STAGE, HOURS.	0.00
TOP LF...		SIDE %PER			
MID LF...		BASE %PER		PEAK NODAL INTAKE, CFS.....	6.84 IN
BOT LF...				TIME OF PEAK INTAKE, HOURS...	12.00
				PEAK NODAL OUTPUT, CFS.....	2.99 OUT
				TIME OF PEAK OUTPUT, HOURS...	12.40
BASE CFS.	0.000	STAGE TO.	54.000	POINTS OUT OF TOLERANCE.....	0
X COORD..		Y COORD..		MAXIMUM STAGE ERROR.....	0.00

Node..... 001, STAGING

FLOOD EL.	60.000	PE TO KE.	NO	INPUT ID.....	932744287
				FLOOD ELEVATION REACHED.....	NO
TIME, HRS		STAGE EL.		INITIAL STAGE ELEVATION.....	54.00
TIME, HRS		STAGE EL.		INITIAL STORAGE, CUBIC FEET..	0.00
TIME, HRS		STAGE EL.		MAXIMUM STAGE REACHED.....	54.00
TIME, HRS		STAGE EL.		MINIMUM STAGE REACHED.....	54.00
TIME, HRS		STAGE EL.		MAXIMUM GROSS STORAGE, CF....	0.00
TIME, HRS		STAGE EL.		MAXIMUM DETENTION STORAGE, CF	0.00
TIME, HRS		STAGE EL.		FINAL STAGE ELEVATION.....	54.00
TIME, HRS		STAGE EL.		TIME OF MAXIMUM STAGE, HOURS.	0.00
TIME, HRS		STAGE EL.		TIME OF MINIMUM STAGE, HOURS.	0.00
TIME, HRS		STAGE EL.			
TIME, HRS		STAGE EL.			
				PEAK NODAL INTAKE, CFS.....	2.99
				TIME OF PEAK INTAKE, HOURS...	12.40
				PEAK NODAL OUTPUT, CFS.....	0.00
				TIME OF PEAK OUTPUT, HOURS...	0.00
		STAGE TO.	54.000	POINTS OUT OF TOLERANCE.....	0
X COORD..		Y COORD..		MAXIMUM STAGE ERROR.....	0.00

Node..... 002, SUBAREA

FILE NAME	10_POST	FLOOD EL.	58.000	INPUT ID.....	940342458
INPUT ID#	939672853			FLOOD ELEVATION REACHED.....	NO
ALT TYPE.	RNF0002			INITIAL STAGE ELEVATION.....	58.00
RUN, HRS.	25.500			INITIAL STORAGE, CUBIC FEET..	0.00
DT, HRS..	0.500			MAXIMUM STAGE REACHED.....	58.00
DATA PTS.	52			MINIMUM STAGE REACHED.....	58.00
STORM....	SCS_II			MAXIMUM GROSS STORAGE, CF....	0.00
HOURS....	24.000			MAXIMUM DETENTION STORAGE, CF	0.00
RAINFALL.	5.040			FINAL STAGE ELEVATION.....	58.00
EXCESS...	4.128			TIME OF MAXIMUM STAGE, HOURS.	0.00
ACREAGE..	2.076			TIME OF MINIMUM STAGE, HOURS.	0.00
TC, HRS..	0.333				
TP, HRS..	12.000				
PEAK CFS.	6.839			PEAK NODAL INTAKE, CFS.....	6.84
ACFT VOL.	0.714			TIME OF PEAK INTAKE, HOURS...	12.00
EXECUTED.	YES			PEAK NODAL OUTPUT, CFS.....	6.84
				TIME OF PEAK OUTPUT, HOURS...	12.00
BASE CFS.	0.000			POINTS OUT OF TOLERANCE.....	0
X COORD..		Y COORD..		MAXIMUM STAGE ERROR.....	0.00

Node..... 003, JUNCTION

FLOOD EL.	60.000			INPUT ID.....	918135315
				FLOOD ELEVATION REACHED.....	NO
				INITIAL STAGE ELEVATION.....	54.00
				INITIAL STORAGE, CUBIC FEET..	0.00
				MAXIMUM STAGE REACHED.....	54.38
				MINIMUM STAGE REACHED.....	54.00
				MAXIMUM GROSS STORAGE, CF....	0.00
				MAXIMUM DETENTION STORAGE, CF	0.00
				FINAL STAGE ELEVATION.....	54.01
				TIME OF MAXIMUM STAGE, HOURS.	12.40
				TIME OF MINIMUM STAGE, HOURS.	0.00
				PEAK NODAL INTAKE, CFS.....	2.99
				TIME OF PEAK INTAKE, HOURS...	12.40
				PEAK NODAL OUTPUT, CFS.....	2.99
				TIME OF PEAK OUTPUT, HOURS...	12.40
BASE CFS.	0.000			POINTS OUT OF TOLERANCE.....	0
X COORD..		Y COORD..		MAXIMUM STAGE ERROR.....	0.00

BRN REPORTS

Post-Development Subarea Runoff Hydrograph - 10 Year Storm Event

UNIT HYDROGRAPH FILE..... SCS_484	FILE.... 10_POST
TOTAL DRAINAGE AREA, ACRES... 2.0756	INPUT ID 941553431
WEIGHTED SCS CURVE NUMBER.... 92.0	TYPE.... RNF0002
INITIAL ABSTRACTION FACTOR... 0.2	RUN, HRS 25.5
TIME OF CONCENTRATION, HOURS. 0.333333	DT, HRS. 0.5
	DATA PTS 52
	STORM... SCS_II
	DURATION 24.0
	RAINFALL 5.04
	EXCESS.. 4.1283541
	ACREAGE. 2.0756
	TC, HRS. 0.333333 (20 MIN.)
	TP, HRS. 12.0
	PEAK CFS 6.8391414
	ACFT VOL 0.714313
	READY... YES
	CFS TOL. 0.001
	HRS TOL. 0.01

Data Pt #	Time Hours	Rainfall Inches	Excess Inches	Raw CFS Load	Final CFS Runoff
0	0.000	0.0000	0.0000	0.000	0.0000
1	0.500	0.0252	0.0000	0.000	0.0000
2	1.000	0.0554	0.0000	0.000	0.0000
3	1.500	0.0857	0.0000	0.000	0.0000
4	2.000	0.1109	0.0000	0.000	0.0000
5	2.500	0.1462	0.0000	0.000	0.0000
6	3.000	0.1764	0.0000	0.000	0.0000
7	3.500	0.2117	0.0016	0.007	0.0061
8	4.000	0.2419	0.0049	0.014	0.0135
9	4.500	0.2822	0.0120	0.030	0.0285
10	5.000	0.3226	0.0217	0.041	0.0398
11	5.500	0.3629	0.0337	0.050	0.0497
12	6.000	0.4032	0.0478	0.059	0.0584
13	6.500	0.4536	0.0681	0.085	0.0828
14	7.000	0.5040	0.0908	0.095	0.0945
15	7.500	0.5544	0.1158	0.105	0.1039
16	8.000	0.6048	0.1428	0.113	0.1123
17	8.500	0.6754	0.1834	0.170	0.1660
18	9.000	0.7409	0.2238	0.169	0.1691
19	9.500	0.8215	0.2764	0.220	0.2168
20	10.000	0.9122	0.3390	0.262	0.2591
21	10.500	1.0282	0.4233	0.353	0.3463
22	11.000	1.1844	0.5431	0.501	0.4907
23	11.500	1.4263	0.7392	0.820	0.7977
24	12.000	3.3415	2.4853	7.307	6.8391

25	12.500	3.7044	2.8328	1.454	1.8771
26	13.000	3.8909	3.0123	0.751	0.8063
27	13.500	4.0270	3.1436	0.550	0.5650
28	14.000	4.1328	3.2459	0.428	0.4374
29	14.500	4.2084	3.3191	0.306	0.3154
30	15.000	4.2840	3.3924	0.307	0.3068
31	15.500	4.3596	3.4657	0.307	0.3070
32	16.000	4.4352	3.5391	0.307	0.3073
33	16.500	4.4806	3.5832	0.184	0.1935
34	17.000	4.5259	3.6273	0.184	0.1847
35	17.500	4.5713	3.6714	0.185	0.1847
36	18.000	4.6166	3.7155	0.185	0.1848
37	18.500	4.6620	3.7597	0.185	0.1849
38	19.000	4.7074	3.8038	0.185	0.1850
39	19.500	4.7527	3.8480	0.185	0.1850
40	20.000	4.7981	3.8922	0.185	0.1851
41	20.500	4.8283	3.9217	0.123	0.1280
42	21.000	4.8586	3.9512	0.123	0.1235
43	21.500	4.8888	3.9807	0.123	0.1235
44	22.000	4.9190	4.0102	0.123	0.1236
45	22.500	4.9493	4.0397	0.124	0.1236
46	23.000	4.9795	4.0693	0.124	0.1236
47	23.500	5.0098	4.0988	0.124	0.1237
48	24.000	5.0400	4.1284	0.124	0.1237
49	24.500	5.0400	4.1284	0.000	0.0090
50	25.000	5.0400	4.1284	0.000	0.0000
51	25.500	5.0400	4.1284	0.000	0.0000

BRN REPORTS

100 YEAR Storm Event

Project C:\HSS\980440.WBS\100_BOX.BRN
Last Revised on Fri Oct 29 07:46:33 1999
Run of Fri Oct 29 07:46:37 1999 (Status = CONVERGED)

Project Contains 4 Paths.
Project Contains 4 Nodes.

Path	Up Stream Node Name	Down Stream Node Name	Path Type
0	SUBAREA	POND	DIRECT
1	POND	J1	ORIFICE
2	J1	OUT	PIPE
3	POND	OUT	BREACH

Node	Name	Node Type
0	POND	POND
1	OUT	STAGING
2	SUBAREA	SUBAREA
3	J1	JUNCTION

MAX WSEL

Node	Name	Node Type	Min El.	at Hr.	Max El.	at Hr.	Flooded
0	POND	POND	54.00	0.00	56.94	12.10	NO
1	OUT	STAGING	54.00	0.00	54.00	0.00	NO
2	SUBAREA	SUBAREA	58.00	0.00	58.00	0.00	NO
3	J1	JUNCTION	54.00	0.00	55.13	12.10	NO

Node	Name	Maximum CFS Inflow	Maximum CFS Outflow	
0	POND	10.92 @ 12.00 Hours	9.87 @ 12.10 Hours	OUTFLOW
1	OUT	9.86 @ 12.10 Hours	0.00 @ 0.00 Hours	
2	SUBAREA	10.92 @ 12.00 Hours	10.92 @ 12.00 Hours	INFLOW
3	J1	9.49 @ 12.10 Hours	9.48 @ 12.10 Hours	

58.00
56.94
1.06' FB OK

Report on Paths of Project 100_BOX.

Path..... 000, DIRECT
Upper Node 002, SUBAREA
Lower Node 000, POND

DIRECT..		INPUT ID	918060059
		TO CFS..	0.00
		TO CF...	0.00
		MAX IN..	10.92
		MIN IN..	0.00
		MAX OUT.	10.92
		MIN OUT.	0.00
HW PE/KE	NO	FWD K...	0.00
TW PE/KE	YES	REV K...	0.00
HW EL...	58.000	FWD X...	0.00
TW EL...	58.000	REV X...	0.00

Path..... 001, ORIFICE
Upper Node 000, POND
Lower Node 003, J1

CREST EL	56.500	INPUT ID	939673236
LENGTH..	2.500	TO CFS..	0.00
WIDTH...	2.500	TO CF...	0.00
SHAPE...	RECTANGLE	MAX IN..	9.49
PCT OPEN	55.000	MIN IN..	0.00
WEIR C..	3.200	MAX OUT.	9.49
ORFC C..	0.600	MIN OUT.	0.00
HANDLE..			
HW PE/KE	YES	FWD K...	0.00
TW PE/KE	NO	REV K...	0.00
HW EL...	58.000	FWD X...	0.00
TW EL...	60.000	REV X...	0.00

Path..... 002, PIPE
Upper Node 003, J1
Lower Node 001, OUT

LEN, FT.	30.000	INPUT ID	940611662
MANN N..	0.011	TO CFS..	0.00
RISE, FT	1.500	TO CF...	0.00
SPAN, FT	1.500	MAX IN..	9.48
INLET——		MIN IN..	0.00
INVERT..	53.500	MAX OUT.	9.48
ENT KE..	0.200	MIN OUT.	0.00
OUTLET——			
INVERT..	53.500		
ENT KE..	0.200		
BW STEPS	0		
HW PE/KE	NO	FWD K...	0.00
TW PE/KE	NO	REV K...	0.00
MAX HW..	60.000	FWD X...	0.00
MAX TW..	60.000	REV X...	0.00

Path..... 003, BREACH
Upper Node 000, POND
Lower Node 001, OUT

TOP EL..	58.000	INPUT ID	941201193
BOT EL..	56.800	TO CFS..	0.00
BOT W...	2.000	TO CF...	0.00
SIDE Z..	3.000	MAX IN..	0.38
		MIN IN..	0.00
WEIR C..		MAX OUT.	0.38
VEE C...		MIN OUT.	0.00
ORFC C..			
TW RATIO			
APPROACH			
DEPTH...			
WIDTH...			
HANDLE..			
HW PE/KE	YES	FWD K...	0.00
TW PE/KE	NO	REV K...	0.00
MAX HW..	58.000	FWD X...	0.00
MAX TW..	60.000	REV X...	0.00

Report on Nodes of Project 100_BOX.

Node..... 000, POND

TOP EL...	58.000	TOP AREA.	0.235	INPUT ID.....	933004157
EL.....	57.000	AREA.....	0.195	FLOOD ELEVATION REACHED.....	NO
EL.....	56.000	AREA.....	0.159	INITIAL STAGE ELEVATION.....	54.00
EL.....	55.000	AREA.....	0.133	INITIAL STORAGE, CUBIC FEET..	0.00
EL.....		AREA.....		MAXIMUM STAGE REACHED.....	56.94
EL.....		AREA.....		MINIMUM STAGE REACHED.....	54.00
EL.....		AREA.....		MAXIMUM GROSS STORAGE, CF....	18978.70
EL.....		AREA.....		MAXIMUM DETENTION STORAGE, CF	18978.70
EL.....		AREA.....		FINAL STAGE ELEVATION.....	56.52
EL.....		AREA.....		TIME OF MAXIMUM STAGE, HOURS.	12.10
BOT EL...	54.000	BOT AREA.	0.112	TIME OF MINIMUM STAGE, HOURS.	0.00
TOP LF...		SIDE %PER			
MID LF...		BASE %PER		PEAK NODAL INTAKE, CFS.....	10.92
BOT LF...				TIME OF PEAK INTAKE, HOURS...	12.00
				PEAK NODAL OUTPUT, CFS.....	9.87
				TIME OF PEAK OUTPUT, HOURS...	12.10
BASE CFS.	0.000	STAGE TO.	54.000	POINTS OUT OF TOLERANCE.....	0
X COORD..		Y COORD..		MAXIMUM STAGE ERROR.....	0.00

Node..... 001, STAGING

FLOOD EL.	60.000	PE TO KE.	NO	INPUT ID.....	932744287
				FLOOD ELEVATION REACHED.....	NO
TIME, HRS		STAGE EL.		INITIAL STAGE ELEVATION.....	54.00
TIME, HRS		STAGE EL.		INITIAL STORAGE, CUBIC FEET..	0.00
TIME, HRS		STAGE EL.		MAXIMUM STAGE REACHED.....	54.00
TIME, HRS		STAGE EL.		MINIMUM STAGE REACHED.....	54.00
TIME, HRS		STAGE EL.		MAXIMUM GROSS STORAGE, CF....	0.00
TIME, HRS		STAGE EL.		MAXIMUM DETENTION STORAGE, CF	0.00
TIME, HRS		STAGE EL.		FINAL STAGE ELEVATION.....	54.00
TIME, HRS		STAGE EL.		TIME OF MAXIMUM STAGE, HOURS.	0.00
TIME, HRS		STAGE EL.		TIME OF MINIMUM STAGE, HOURS.	0.00
TIME, HRS		STAGE EL.			
TIME, HRS		STAGE EL.			
				PEAK NODAL INTAKE, CFS.....	9.86
				TIME OF PEAK INTAKE, HOURS...	12.10
				PEAK NODAL OUTPUT, CFS.....	0.00
				TIME OF PEAK OUTPUT, HOURS...	0.00
		STAGE TO.	54.000	POINTS OUT OF TOLERANCE.....	0
X COORD..		Y COORD..		MAXIMUM STAGE ERROR.....	0.00

JR057_JCC_FIRE_STATION_5 - 048

Node..... 002, SUBAREA

FILE NAME	100_POST	FLOOD EL.	58.000	INPUT ID.....	939673117
INPUT ID#	939673090			FLOOD ELEVATION REACHED.....	NO
ALT TYPE.	RNF0002			INITIAL STAGE ELEVATION.....	58.00
RUN, HRS.	25.500			INITIAL STORAGE, CUBIC FEET..	0.00
DT, HRS..	0.500			MAXIMUM STAGE REACHED.....	58.00
DATA PTS.	52			MINIMUM STAGE REACHED.....	58.00
STORM....	SCS_II			MAXIMUM GROSS STORAGE, CF....	0.00
HOURS....	24.000			MAXIMUM DETENTION STORAGE, CF	0.00
RAINFALL.	7.680			FINAL STAGE ELEVATION.....	58.00
EXCESS...	6.727			TIME OF MAXIMUM STAGE, HOURS.	0.00
ACREAGE..	2.076			TIME OF MINIMUM STAGE, HOURS.	0.00
TC, HRS..	0.333				
TP, HRS..	12.000				
PEAK CFS.	10.915			PEAK NODAL INTAKE, CFS.....	10.92
ACFT VOL.	1.164			TIME OF PEAK INTAKE, HOURS...	12.00
EXECUTED.	YES			PEAK NODAL OUTPUT, CFS.....	10.92
				TIME OF PEAK OUTPUT, HOURS...	12.00
BASE CFS.	0.000			POINTS OUT OF TOLERANCE.....	0
X COORD..		Y COORD..		MAXIMUM STAGE ERROR.....	0.00

Node..... 003, JUNCTION

FLOOD EL.	60.000			INPUT ID.....	918135315
				FLOOD ELEVATION REACHED.....	NO
				INITIAL STAGE ELEVATION.....	54.00
				INITIAL STORAGE, CUBIC FEET..	0.00
				MAXIMUM STAGE REACHED.....	55.13
				MINIMUM STAGE REACHED.....	54.00
				MAXIMUM GROSS STORAGE, CF....	0.00
				MAXIMUM DETENTION STORAGE, CF	0.00
				FINAL STAGE ELEVATION.....	54.02
				TIME OF MAXIMUM STAGE, HOURS.	12.10
				TIME OF MINIMUM STAGE, HOURS.	0.00
				PEAK NODAL INTAKE, CFS.....	9.49
				TIME OF PEAK INTAKE, HOURS...	12.10
				PEAK NODAL OUTPUT, CFS.....	9.48
				TIME OF PEAK OUTPUT, HOURS...	12.10
BASE CFS.	0.000			POINTS OUT OF TOLERANCE.....	0
X COORD..		Y COORD..		MAXIMUM STAGE ERROR.....	0.00

BRN REPORTS

Post-Development Subarea Runoff Hydrograph - 100 Year Storm Event

UNIT HYDROGRAPH FILE..... SCS_484	FILE.... 100_POST
TOTAL DRAINAGE AREA, ACRES... 2.0756	INPUT ID 939673090
WEIGHTED SCS CURVE NUMBER.... 92.0	TYPE.... RNF0002
INITIAL ABSTRACTION FACTOR... 0.2	RUN, HRS 25.5
TIME OF CONCENTRATION, HOURS. 0.333333	DT, HRS. 0.5
	DATA PTS 52
	STORM... SCS_II
	DURATION 24.0
	RAINFALL 7.68
	EXCESS.. 6.7268004
	ACREAGE. 2.0756
	TC, HRS. 0.333333
	TP, HRS. 12.0
	PEAK CFS 10.915117
	ACFT VOL 1.1639147
	READY... YES
	CFS TOL. 0.001
	HRS TOL. 0.01

Data Pt #	Time Hours	Rainfall Inches	Excess Inches	Raw CFS Load	Final CFS Runoff
0	0.000	0.0000	0.0000	0.000	0.0000
1	0.500	0.0384	0.0000	0.000	0.0000
2	1.000	0.0845	0.0000	0.000	0.0000
3	1.500	0.1306	0.0000	0.000	0.0000
4	2.000	0.1690	0.0000	0.000	0.0000
5	2.500	0.2227	0.0026	0.011	0.0101
6	3.000	0.2688	0.0093	0.028	0.0270
7	3.500	0.3226	0.0217	0.052	0.0501
8	4.000	0.3686	0.0356	0.058	0.0578
9	4.500	0.4301	0.0583	0.095	0.0922
10	5.000	0.4915	0.0850	0.112	0.1105
11	5.500	0.5530	0.1151	0.126	0.1250
12	6.000	0.6144	0.1481	0.138	0.1374
13	6.500	0.6912	0.1929	0.188	0.1841
14	7.000	0.7680	0.2411	0.202	0.2007
15	7.500	0.8448	0.2922	0.214	0.2129
16	8.000	0.9216	0.3457	0.224	0.2232
17	8.500	1.0291	0.4240	0.328	0.3206
18	9.000	1.1290	0.4999	0.317	0.3183
19	9.500	1.2518	0.5966	0.405	0.3987
20	10.000	1.3901	0.7091	0.471	0.4662
21	10.500	1.5667	0.8575	0.621	0.6102
22	11.000	1.8048	1.0637	0.863	0.8459
23	11.500	2.1734	1.3935	1.380	1.3431
24	12.000	5.0918	4.1790	11.656	10.9151
25	12.500	5.6448	4.7206	2.266	2.9452

26	13.000	5.9290	4.9996	1.168	1.2541
27	13.500	6.1363	5.2035	0.853	0.8773
28	14.000	6.2976	5.3623	0.664	0.6786
29	14.500	6.4128	5.4757	0.475	0.4889
30	15.000	6.5280	5.5892	0.475	0.4754
31	15.500	6.6432	5.7027	0.475	0.4755
32	16.000	6.7584	5.8164	0.475	0.4757
33	16.500	6.8275	5.8845	0.285	0.2994
34	17.000	6.8966	5.9527	0.285	0.2857
35	17.500	6.9658	6.0210	0.285	0.2857
36	18.000	7.0349	6.0892	0.286	0.2857
37	18.500	7.1040	6.1575	0.286	0.2858
38	19.000	7.1731	6.2257	0.286	0.2859
39	19.500	7.2422	6.2940	0.286	0.2859
40	20.000	7.3114	6.3623	0.286	0.2860
41	20.500	7.3574	6.4079	0.191	0.1976
42	21.000	7.4035	6.4534	0.191	0.1908
43	21.500	7.4496	6.4989	0.191	0.1907
44	22.000	7.4957	6.5445	0.191	0.1908
45	22.500	7.5418	6.5901	0.191	0.1908
46	23.000	7.5878	6.6356	0.191	0.1908
47	23.500	7.6339	6.6812	0.191	0.1908
48	24.000	7.6800	6.7268	0.191	0.1909
49	24.500	7.6800	6.7268	0.000	0.0139
50	25.000	7.6800	6.7268	0.000	0.0000
51	25.500	7.6800	6.7268	0.000	0.0000

James City County Fire Station - 980440
Water Quality Drawdown

TOPDAM

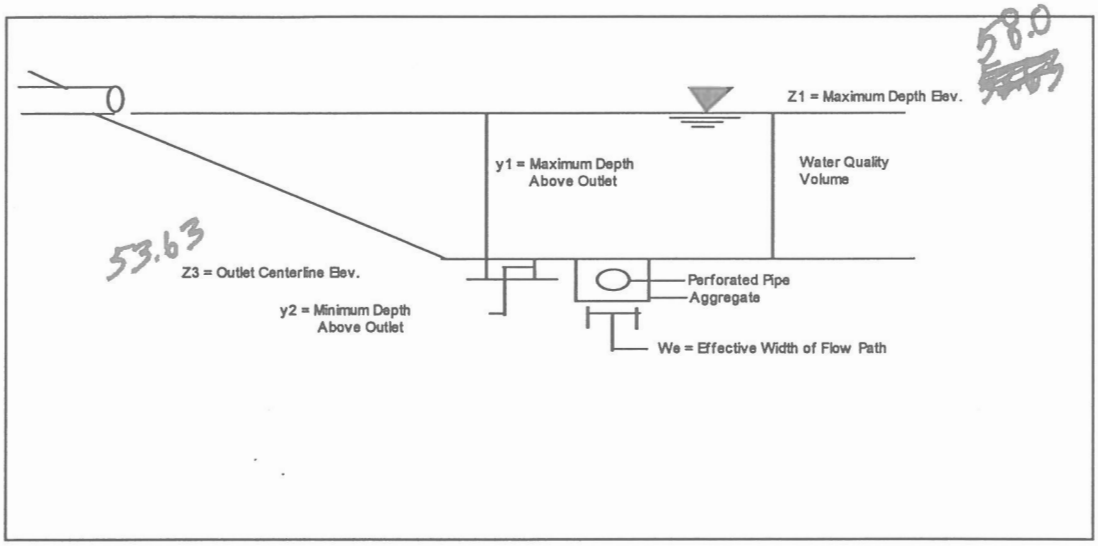

Calculations:

Flow = K * i * A where:

i = Hydraulic Gradient = y / l A = Area Normal to Flow = L * W

l =	Average Flow Length in Aggregate	L =	Length of Perforated Pipe
K =	Permeability of Aggregate	Z1 =	Maximum Depth Elevation
We =	Effective Width of Flow Path	Z2 =	Minimum Depth Elevation
y =	Head	Z3 =	Outlet Centerline Elevation

l =	0.375 ft		Z1 =	58
K =	590 ft/hr	(#stone)	Z2 =	54
We =	1 ft		Z3 =	53.63
L =	0.25 ft			

Time = 24.00 hrs ✓ Qmax = 0.31 cfs

Pond Stage	Head y (ft)	Head Incr. (ft)	Volume (cuft)	Volume Incr. (cuft)	Hydraulic Gradient	Flow (cfh)	Ave. Flow (cfh)	Time Incr. (hrs)	Time (hrs)	Flow (cfs)
56.50	2.87		14977		7.65	1129			0.00	0.31
		0.50		3447			1031	3.34		
56.00	2.37		11530		6.32	932			3.34	0.26
		1.00		6216			736	8.45		
55.00	1.37		5314		3.65	539			11.80	0.15
		1.00		5314			342	15.53		
54.00	0.37		0		0.99	146			27.32	0.04

::

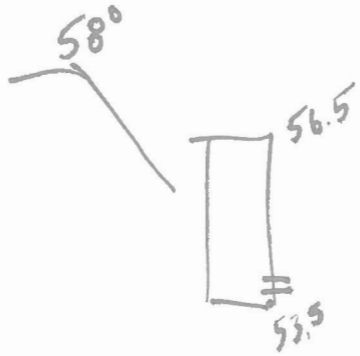

WQV 1815 CF / ACRE

Perforated/Slotted inlet pipe must handle maximum flow.

6" Diameter Inlet Pipe:

Johnson Filtration 6" Slotted PVC Pipe - .02 Slot Width:

Looking at Orifice Flow Capacity for one 1" X .02" slot using BRN:

	@ 2.87 Head	
Calculated Flow / Slot =	0.00098	cfs
Total Required Flow =	0.31	cfs
Total No. of Slots Required = Total Required Flow / Calculated Flow for One Slot		
Total Slots Required =	320	
No. of Slots Per LF =	664	(8 Rows)

SEEMS HIGH PER FOOT OF PIPE.

Required Length = (Total Perf. Required / No. of Holes Per LF) / %Opening
Assuming 75 % Opening of Slots:
Required Length = [redacted] ft

LESS THAN 1 FOOT?

STORMWATER MANAGEMENT NARRATIVE

The stormwater management was designed with two parameters in mind. The first was to detain the runoff from a one-year 24-hour storm event on-site for 24 hours. The second was to pass the flow from a hundred-year 24-hour storm event through the stormwater management facility with one foot of freeboard. These requirements were stipulated by Daryl Cook. Since runoff from this site eventually flows to the Patriots Colony regional stormwater management facility, Daryl stated that we could use the regional facility for water quality requirements.

The analysis of stormwater runoff generation, as well as pond routing through stormwater management facilities, was performed using a computer program entitled Basin Runoff Networking (BRN) Version 3.2. The theory and definitions for this program are attached for your review. The SCS unit hydrograph method was used for generation of runoff hydrographs. Hydrograph routing is accomplished using a network of nodes and paths. A node represents either a runoff producing entity, a system demand, or a storage facility. A path describes a conveyance system from one node to another.

Based on pre-development runoff conditions and information obtained from a geotechnical investigation of the site, a *dry detention basin* design was chosen as the stormwater management facility. The dry detention basin was designed with a top of bank elevation set at 58' and pond bottom elevation of 54'. The pond discharges into a nearby stream with a 6" pipe that is capped at the pond with a 2" low flow circular orifice. The dry pond has a storage volume of approximately 28,814 cubic feet(cf). The pond also has a 35' wide emergency spillway weir for storm events that exceed the pond's storage capacity. The crest of the emergency spillway is set an elevation of 56.5'.

Initial analysis of the proposed stormwater management facility was performed using the one-year storm event. Using the precipitation values for the one-year event provided by James City County, a post-development hydrograph was created to determine the flows generated by the proposed site. The parameters for this hydrograph included a runoff curve number(C_N) of 92, a disturbed site area of 2.08 acres and a time of concentration(T_c) of 11 minutes. Based on these values the project area generated a peak discharge of 3.56 cubic feet per second (cfs). Using these one-year numbers, the pond staged up to a maximum elevation of 55.76' at hour 16.20 with maximum gross storage of 10200.20 cf.

For the 100-year storm event, the project area generated a peak discharge of 11.64 cfs. During this event the pond reached a maximum stage of 56.73' at hour 12.00. Utilizing the emergency spillway, the pond was able to provide 1.27' of freeboard.

prin. spw. needs to handle 10-yr w/out E.S.
need calcs for 10 + 100yr
need a better outlet structure
why rr @ south end of site near BMP
calcs for storm drains
da map
model hard to follow - need schematic
RCN, tc, etc.
E.S - why 35' wide, calcs to show 2' wide - cannot be a fill.

The TAF Group
1081 19th Street
Virginia Beach, Va. 23451
(757) 422-9933

Project # 980440
Project Name: JCC Fire Station
Date: July 26, 1999
Print Date: July 26, 1999

Propose BMP Volume

Elevation (ft)	Area (ft^2)	Incremental Volume (ft^3)	Running Volume (ft^3)	Running Volume (CY)	Area (acre)
54	4867.0	0.0	0.0	0.0	0.112
55	5800.0	5333.5	5333.5	197.5	0.133
56	6944.0	6372.0	11705.5	433.5	0.159
57	8516.0	7730.0	19435.5	719.8	0.196
58	10241.0	9378.5	28814.0	1067.2	0.235

TABLE 3

WORKSHEET FOR BMP POINT SYSTEM

A. STRUCTURAL BMP POINT ALLOCATION

BMP	BMP Points		Fraction of Site Served by BMP		Weighted BMP Points
No ~~Ext. Dry Detention(2)~~	6	x	52%	=	3.1
Patriot's Colony Credit	6	x	–	=	6
		x		=	
		x		=	

TOTAL WEIGHTED STRUCTURAL BMP POINTS: 9.1

B. NATURAL OPEN SPACE CREDIT

Fraction of Site		Natural Open Space Credit (0.1 per 1%)		Points for Natural Open Space
49%	x	0.1	=	4.9

C. TOTAL WEIGHTED POINTS

Structural BMP Points	+	Natural Open Space Points	=	TOTAL
9.1	+	4.9	=	14

CREDIT FOR PATRIOT'S COLONY = 6 PTS.

S-91-99
JR057

STORMWATER MANAGEMENT NARRATIVE

The stormwater management was designed with three parameters in mind. The first was to detain the runoff from a one-year 24-hour storm event on-site for at least 24 hours. The second was to pass the flow from the 10-year 24-hour storm event through the principal spillway with no flow through the emergency spillway. The third was to pass the flow from a hundred-year 24-hour storm event through the stormwater management facility with one foot of freeboard. These requirements were stipulated by Daryl Cook. Since runoff from this site eventually flows to the Patriots Colony regional stormwater management facility, Mr. Cook stated that we could use the regional facility for water quality requirements.

The analysis of stormwater runoff generation, as well as pond routing through stormwater management facilities, was performed using a computer program entitled Basin Runoff Networking (BRN) Version 3.2. The theory and definitions for this program are attached for your review. The SCS unit hydrograph method was used for generation of runoff hydrographs. Hydrograph routing is accomplished using a network of nodes and paths. A node represents either a runoff producing entity, a system demand, or a storage facility. A path describes a conveyance system from one node to another.

Based on pre-development runoff conditions and information obtained from a geotechnical investigation of the site, a *dry detention basin* design was chosen as the stormwater management facility. The dry detention basin was designed with a top of bank elevation set at 58' and pond bottom elevation of 54'. The dry pond has a storage volume of approximately 28,814 cubic feet (cf). Pond discharge is controlled by an outlet structure that passes flows to a nearby stream through an 18" pipe. Runoff from lower intensity storm events are drawn down in the pond by a low flow orifice. Perforated pipe that is buried in aggregate and connected to the outlet control structure will serve as the low flow orifice. During significant rainfall events, the water level in the pond will stage up to the horizontal opening at the top of the control structure and be discharged to the stream through the 18" pipe. The elevation of the top of the outlet control structure was set at 56.50. The pond also has a 2' wide emergency spillway weir for storm events that exceed the pond's storage capacity. The crest of the emergency spillway is set an elevation of 56.8'.

20 MIN POST Tc ?

Initial analysis of the proposed stormwater management facility was performed using the one-year storm event. Using the precipitation values for the one-year event provided by James City County, a post-development hydrograph was created to determine the flows generated by the proposed site. The parameters for this hydrograph included a runoff curve number (CN) of 92, a disturbed site area of 2.08 acres and a time of concentration (TC) of 20 minutes. Based on these values the project area generated a peak discharge of 3.33 cubic feet per second (cfs). Using these one-year numbers, the pond staged up to a maximum elevation of 56.40' at hour 24.10 with a gross storage of 14,792 cf. Since the outflow from the low flow orifice is negligible for the routing calculations, and the one-year storm did not stage up to the principle spillway elevation, no outfall was used for this BRN run. This explains the maximum stage time of 24.10 hours. The attached drawdown spreadsheet shows that all runoff from the one-year storm event will exit the detention basin through the low flow orifice in 27.32 hours.

During the 10-year storm event, the project area generated a peak discharge of 6.84 cfs, and the pond water surface staged up to a maximum elevation of 56.71 at hour 12.40 with a gross storage of 17,163 cf

For the 100-year storm event, the project area generated a peak discharge of 10.92 cfs. During this event the pond reached a maximum stage of 56.94' at hour 12.10. Utilizing the emergency spillway, the pond was able to provide 1.06' of freeboard.

	CFS	
1 YR	3.33	0.00
	6.84	8.99
	10.92	9.87

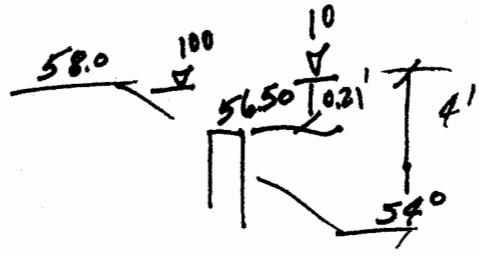

1 YR	56.40	
10 YR	56.71	(1.06' FB)
100 YR.	56.94	

BASIN RUNOFF NETWORKING, VERSION 3.10

THEORY AND DEFINITIONS

INTRODUCTION..... Page 2
RELAXATION..... Page 2
HYDROGRAPH GENERATION..... Page 2
MASS RAINFALL CURVES..... Page 3
TOTAL ACCUMULATED RAINFALL..... Page 3
SCS EXCESS PRECIPITATION..... Page 3
RATIONAL EXCESS PRECIPITATION..... Page 4
SCS LAG TIME OF CONCENTRATION..... Page 4
KINEMATIC WAVE TIME OF CONCENTRATION.... Page 4
UNIT HYDROGRAPH CONVOLUTION..... Page 5
LINEAR RESERVOIR ROUTING..... Page 5
NODE FLOWS..... Page 5
POND STAGE/STORAGE EQUATIONS..... Page 6
CATCH BASIN AND MANHOLE EQUATIONS..... Page 7
DISCHARGE MATRIX..... Page 7
PATH FLOWS..... Page 7
REFERENCES..... Page 8

INTRODUCTION:

Every attempt has been made in the BRM program to combine the methods of hydrology and hydraulics in a manner consistent with the published sources as delineated in the references section. The individual equations, definitions, and related parameters are outlined in as much detail as possible, so as to give the user a better feel for what the program is doing.

As with any engineering problem, user judgement as to suitability, input data, and output results is a major factor in evaluating the solution to the problem. Some judgement calls can made by the program, to lessen the burden on the user. For instance, the program can determine if an additional velocity head should be added a pipe entrance loss, depending on the type of node from which the pipe is exiting.

RELAXATION:

The most common example of a relaxation procedure is the well known Hardy-Cross method of moment redistribution for rigid frame analysis. Although the digital computer has permitted the development of other methods, such as the stiffness matrix, the Hardy-Cross concept of doing it over until you get it right, is still valid. Basically, that's all relaxation is, develop an initial solution, put the results back into the problem, and if the new results don't agree within some tolerance, do it again until it does.

A simplified example of relaxation as used in BRM would be two ponds connected by a weir, with one of the ponds discharging to some outfall, also by a weir. Both ponds would also receive some form of direct inflow, such as a hydrograph. If the upstream pond was at an elevation sufficiently higher than the downstream pond, such that the interconnecting weir was never submerged by the downstream pond, no relaxation would be necessary, since tailwater effects would never be caused.

With the more realistic situation of the two ponds at or near the same elevation, the downstream pond can have significant effects on the upstream pond. The basic approach taken by the program is to first solve the free discharge situation, save the arrays of stage vs. time for both ponds, and then repeat the process, this time with new stages in the ponds. Each loop, the new stage is compared to the last calculated stage, and an adjusted value (usually somewhere between) is assigned. At each point in time, a record of the adjustments (errors) is maintained, and convergence can not occur until all errors at all ponds at all points in time are within some small tolerance.

HYDROGRAPH GENERATION:

Four basic steps are used to generate the runoff hydrograph.

1. Create a mass rainfall database of accumulated inches of precipitation versus time. The user selects the desired normalized (0 to 1) mass rainfall curve and enters the total accumulated rainfall. Accumulated inches at any time is equal to the rainfall accumulation ratio times the total rainfall.

2. Develop an excess precipitation database of inches of excess (SCS calls runoff) versus time. Depending on the users input either the rational method or the SCS method will be used.

3. Develop an instantaneous hydrograph for the site based on the acres and excess precipitation database.

4. Combine the instantaneous hydrograph with the time of concentration to yield the final site hydrograph. The user can select either the SCS unit hydrograph method, or the linear reservoir routing method.

MASS RAINFALL CURVES:

The user must select the storm profile (accumulation vs. time), to be used. All BRN storms are normalized so as to begin with a value of 0.0 and end with a value of 1.0.

TOTAL ACCUMULATED RAINFALL:

The user must specify the total rainfall (in inches) that is expected to accumulate at the end of the storm period (duration). Unlike some other programs, this is the ACTUAL value, not some factor times a 24 hour value.

SCS EXCESS PRECIPITATION:

If the user selects the SCS method to develop the excess precipitation, the below equations are used.

Q = ((P -Ia)62) / (P - Ia + S)
Q = accumulated excess precipitation inches
P = accumulated rainfall in inches
S = maximum potential retention (soil storage) in inches
S = (1000/CN) - 10
CN = SCS curve number (>0 to 100) a value of near zero indicates virtually no runoff leaves the site. a value of 100 indicates that all rainfall leaves the site as runoff.
Ia = initial abstraction in inches
Ia = initial abstraction factor * S

SCS MAXIMUM POTENTIAL RETENTION:

The SCS curve number (CN) and maximum potential retention (S, soil storage) are related by:

CN = 1000 / (S + 10)
or
S = (1000/CN) - 10

Thus a soil storage capacity of 0.0 (eg. 100% impervious) yields a corresponding CN of 100. Likewise a CN of 0.0 (cannot be ! /0) would indicate an infinite storage capacity (unlimited sink). The HYDROLOGY choice on the F10 Menu provides the user with fast access to calculations for these values.

SCS INITIAL ABSTRACTION:

The SCS initial abstraction is as measure (in inches) of the portion of the rainfall which does NOT leave the site as excess. Numerically the excess must equal 0.0 until this volume of rainfall has been dumped on the site. SCS initial abstraction is calculated as below.

Ia = KIa * S
KIa = initial abstraction factor (dimensionless)
S = maximum potential retention in inches
Ia = initial abstraction in inches

Some user judgment is necessary with the initial abstraction factor, typical values are:

general rural, suburban land use... 0.20
direct connected impervious areas.. 0.05

RATIONAL EXCESS PRECIPITATION:

If the user selects the rational method to develop the excess precipitation, the below equations are used.

Q = C * P
Q = accumulated excess precipitation in inches
C = rational coefficient (0 to 1), a value of 0 indicates all rainfall is contained within the site (no runoff). A value of 1 indicates no rainfall is contained within the site (all runoff).
P = accumulated rainfall in inches

SCS LAG TIME OF CONCENTRATION:

If the user selects a runoff method which calculates the SCS Lag Tc the following equations are used:
Lag = ((Lené0.8)*(S+1)é0.7)/(1900*sqrt(slp))
Lag = time lag in hours
Len = hydraulic length in feet
S = maximum potential retention
slp = ground slope in percent
Tc = Lag / 0.6 (in hours)

ADJUSTED:

If the user has entered the percentage of impervious cover (optional) the SCS Lag Tc is adjusted according to the below equations.

C1 = 0.00678900000
C2 = 0.00033500000
C3 = 0.00000042980
C4 = 0.00000002185
LF = lag factor
LF = 1 - (Pct*(-C1 + C2*CN - C3*CNé2 - C4*CNé3))
Pct = percentage of impervious cover
CN = SCS curve number
L0 = LF * Lag
L0 = adjusted lag
Lag = raw SCS lag in hours
Tc = L0 / 0.6
Tc = adjusted Tc (in hours)

KINEMATIC WAVE TIME OF CONCENTRATION:

If the user selects a runoff method which uses the kinematic wave Tc the below equations are used.

Tc = 0.939 * Lené0.6 * Né0.6 / (ié0.4 * slpé0.3)
Len = hydraulic length in feet
N = manning overland flow friction coefficient
i = intensity of lateral inflow (inches per hour)
slp = slope in feet per foot
Tc = time of concentration in minutes

Since Tc = f(i) and i = g(Tc) an iterative solution is required. The program performs the iterations until convergence to a small error (typically well less than a minute). Note that the intensity of lateral inflow is based on excess precipitation, not raw rainfall. In order to perform the iterative solution, the excess precipitation curve must be converted to an IDF curve.

This is done according to the following equation.

i = a / ((t + c)ëb)
i = intensity of excess in inches per hour
t = duration of excess in minutes
a,b,c are coefficients obtained thru curve fitting.

UNIT HYDROGRAPH CONVOLUTION:

If the user selects the UHG method to develop the final runoff hydrograph, a specific unit hydrograph must also be selected. Unless an agency has specified a particular one, some degree of user judgment is required. Whatever unit hydrograph is selected, a discrete convolution of the excess precipitation and the UHG is performed to generate the final runoff hydrograph. Although all unit hydrographs must produce the same volume of runoff, the peak rate of runoff is significantly affected by the shape factor. A high shape factor should always develop a higher rate of peak runoff, than a low shape factor.

SCS UNIT HYDROGRAPHS:

The program has three basic SCS unit hydrograph files:

SCS_256, SCS format - gamma appearance - shape factor of 256
SCS_323, SCS format - gamma appearance - shape factor of 323
SCS_484, SCS format - gamma appearance-- shape factor of 484

TRIANGULAR UNIT HYDROGRAPHS:

To provide the user with a wider range of shape factors, additional triangular unit hydrographs have been supplied. All begin with the file name prefix TRI_###, where the ### represents the shape factor. All conform to the SCS format, and are triangular in appearance.

LINEAR RESERVOIR ROUTING:

O2 = O1 + K*(I1 + I2 - 2*O1)
K = routing coefficient
K = dT / (2*Tc + dT)
dT = time increment of analysis in hours (rainfall dt)
Tc = time of concentration in hours

note: Kmax = 0.5 ---> Tc > dT/2, in other words, for routing to be accomplished, the time of concentration must be greater than one-half the time increments of the rainfall data.

NODE FLOWS:

LOCAL:

Locally generated flow. Hydrographs are examples of nodal local flow. Base flow (if specified) is a special case of local flow.

INFLOW:

Net flow entering node.

OUTFLOW:

Net flow leaving the node.

For internal calculations the program maintains a continuous monitoring of nodal flows and their variation with time as the model run proceeds. During the model run, sign convention is important, and assigned as follows:

LOCAL..: always positive
INFLOW.: flow from upstream nodes, positive if FROM the upper node, negative if TO the upper node.
OUTFLOW: flow to downstream nodes, positive if TO the lower node, negative if FROM the lower node.

Thus during computations, negative inflow will become positive outflow, and negative outflow will become positive inflow. To make review of node flows more understandable, after the run has been terminated, the following adjustments are made.

LOCAL..: no adjustment necessary, always positive.
INFLOW.: summation of local, positive inflow, and -negative outflow. OUTFLOW: summation of positive outflow and -negative inflow.

Thus the nodal mass balance is based on inflow and outflow, both with positive signs, and the standard terminology of (I - O) can be utilized.

To find out where nodal flows were actually coming from or going to at any time, each path maintains two arrays of flow vs time. Path inflow is flow occurring at the upper end, while path outflow is flow occurring at the lower end. If path inflow or outflow is negative, it indicates flow in the reverse direction (ie. FROM LOWER node TO UPPER node). Normal positive path flow indicates flow in the forward direction (ie. FROM UPPER node TO LOWER node).

POND STAGE/STORAGE EQUATIONS:

Nodes which can store water, such as ponds, xy coordinate ponds, standard ponds, etc., require an iterative continuity balance at each point in time according to the below equations:

CONTINUITY:

dS = (I - O)*dT
dS = change in storage in cf
I = inflow to the node in cfs
O = outflow from the node in cfs
dT = change in time in seconds

UTILIZED:

S2 - S1 = (Iavg - Oavg) * (T2 - T1)
S2 = storage at time 2
S1 = storage at time 1
Iavg = average inflow from T1 to T2
Iavg = (I1 + I2)/2
I1 = inflow at time 1 in cfs
I2 = inflow at time 2 in cfs
Oavg = average outflow from T1 to T2
Oavg = (O1 + O2)/2
O1 = outflow at time 1 in cfs
O2 = outflow at time 2 in cfs

known quantities are..: T1, T2, S1, I1, I2, and O1
unknown quantities are: S2 and O2
because both S2 and O2 are functions of stage, an iterative solution is performed to satisfy continuity.

CATCH BASIN AND MANHOLE EQUATIONS:

Because the typical storage capacity in a catchbasin or manhole is in the range of 50 to 500 cubic feet, if the pond continuity equation was used, a very small dT would be required for numerical stability. Typically (from observing other programs) this would mean a model runtime dT of as small as one tenth of one second. That is a ridiculous approach to the solution. BRN recognizes that for all practical purposes, the storage can be considered zero, and that at any time, the nodal outflow must equal the nodal inflow.

I - O = 0.0 +/- t
I = inflow (net positive flow TO node) in CFS
O = outflow (net positive flow FROM node) in CFS
t = user specified tolerance in CFS

DISCHARGE MATRIX:

As with many programs, BRN uses a lookup table, with curvilinear interpolation, to estimate the cfs discharge through any path as a function of upstream elevation. Unlike most programs, which use an array (q = f(upper stage)), BRN uses a matrix (q = f(upper,lower stage)). This use of a matrix provides for a tailwater sensitivity analysis. The array, always based on fixed tailwater conditions, will produce a simple lumped path rating curve, no matter what the tailwater may be.

The matrix can account for tailwaters, and depending on downstream conditions, may display either a lumped or looped rating curve. Rating curves are available to the user in the output review module (step 4).

Although each path in BRN has a unique set of equations which are used to develop the discharge matrix, they can be classified as:

PATH FLOWS:

NO BALANCE:

Paths which simply move water from the upper node to the lower node, such as direct paths. Since the backwater process is terminated at a no balance path, there can be no paths upstream of the upper node of a no balance path.

RATE BALANCE:

Paths not capable of storing water, such as weirs, gates, pumps, etc. Outflow at the lower end always equals inflow at the upper end. Standard equations from king's handbook or other recognized sources are used.

STORAGE BALANCE:

Paths capable of storing water. Outflow at the lower end may or may not equal inflow at the upper end, depending on conditions within the network.

A. Prismatic multi-step backwater calculations. Pipes, ditches, waterways with same upper and lower sections, etc.
B. Single step, variable section backwater calculations. Waterways with different upper and lower sections.

EXTERNAL CALL BALANCE:

Paths capable of storing water, but storage calculations are a function of external conditions,

such as the recharge path for groundwater mounding.

REFERENCES:

1. URBAN HYDROLOGY FOR SMALL URBAN WATERSHEDS, SCS TR55
2. MODERN SEWER DESIGN, AMERICAN IRON AND STEEL INSTITUTE
3. CONCRETE PIPE DESIGN MANUAL, AMERICAN CONCRETE PIPE ASSOCIATION
4. APPLIED HYDROLOGY, CHOW/MAIDMENT/MAYS
5. HYDRAULICS OF CULVERTS, AMERICAN CONCRETE PIPE ASSOCIATION
6. HANDBOOK OF HYDRAULICS, BRATER AND KING
7. OPEN CHANNEL FLOW, HENDERSON
8. FLUID MECHANICS, STREETER
9. GROUNDWATER ENGINEERING, KASHEF
10. GROUND WATER AND WELLS, JOHNSON DIVISION, UOP INC.
11. BRIDGE WATERWAYS ANALYSIS MODEL, FHWA
12. OPEN-CHANNEL HYDRAULICS, FRENCH
13. ENGINEERING HYDROLOGY, PONCE

GEOTECHNICAL ENGINEERING SERVICES REPORT
FIRE STATION - ALTERNATE ROUTE 5
NEWPORT NEWS, VIRGINIA
FES PROJECT NO: 1-81301.001

CLIENT: JAMES CITY COUNTY
BERNARD M. FARMER, JR., P.E.

NO POND BORINGS
POND EMBANKMENT
OR STRUCT RECOMMENDATIONS.
Report mainly applies to
building + road construction
SAT
12-3-99

FOUNDATION ENGINEERING SCIENCE, INC.
- Geotechnical Engineering
- Environmental Management
- Construction Materials Testing

August 28, 1998

James City County
105 Tewning Road
Williamsburg, Virginia 23188-2639

Attn: Bernard M. Farmer, Jr., P.E.

Re: Geotechnical Engineering Services Report
Fire Station - Alternate Route 5
James City County, Virginia
FES Project No. 1-81301.001

Dear Mr. Farmer:

Foundation Engineering Science, Inc. (FES) has completed a geotechnical engineering study at the subject project site. The geotechnical engineering services were performed in general accordance with FES Proposal No. 1-8P258.001, dated August 6, 1998 following the written authorization of James City County Purchase Order No. 990259 dated August 12, 1998. The geotechnical engineering study consisted of performing several soil test borings and obtaining bulk soil samples within the site of the proposed structure and pavement areas. The subsurface information obtained were evaluated with respect to the available project characteristics and recommendations for the foundation support systems and pavement structural section design. In addition to the design recommendations, we assessed the general conditions pertaining to the earthwork phases and developed recommendations for site clearing, grading and filling operations.

Briefly, the results of our analyses indicate the proposed new construction can be supported on conventional shallow foundations with an allowable soil bearing pressure of 3000 pounds per square foot (psf) and a slab-on-grade floor member may also be utilized following proper subgrade preparation and proper drainage improvements, as recommended in this report.

The subgrade soils encountered in the borings performed in the pavement areas indicate a flexible pavement section can be supported. We recommend the pavement structural section consist of a three (3) layers for heavy vehicle and high traffic and two (2) layers for parking spaces as shown in the pavement design recommendation section of this report. A rigid pavement section has been included as an alternate for heavy vehicle traffic [such as fire trucks].

The results of the subsurface exploration program, laboratory testing program, including the recommendations for the foundation system and pavement areas are included in this report. We have great interest in providing construction materials testing and special inspection services during the construction phase of this project and will be pleased to meet with you at your convenience to discuss these engineering services.

11843 B Canon Boulevard ➤ Newport News, Virginia 23606 ➤ Tel: 757-873-4113 Fax: 757-873-4114
Riner ➤ Williamsburg ➤ Virginia Beach

FES appreciates the opportunity to be of service to James City County on this important project and looks forward to its successful completion. If we can be of any further assistance or you have any questions regarding this report, please do not hesitate to contact the undersigned.

Respectfully submitted,

FOUNDATION ENGINEERING SCIENCE, INC.

9/2/98

Jeffrey C. Norman
Project Manager

9/2/98

Raja S. Elawar, P.E.
Principal Engineer
VA Reg. No. 26383

Attachments: *Appendix*
Table 1 California Bearing Ratio
Figure 1 USDA Soil Conservation Map
Figure 2 Boring and CBR Location Sketch
Boring Profile Sheets
Laboratory Test Results Figures

X Copies: *(2) Client*

C:\wpdocs\geotech\1-81301.001

COMMONWEALTH OF VIRGINIA
RAJA S. ELAWAR
No. 026383

INTRODUCTION

Site Characteristics

The proposed project site is located in James City County, Virginia. Specifically, this site is located off Centerville Road opposite alternate Route 5 intersection with Centerville Road just west of Williamsburg Golf Course maintenance building. The site is level and heavily wooded with a portion of the site containing a stock pile of soil.

Project Information

The proposed development is planned to consist of the construction of a one (1) story fire station, paved parking and access road. The construction of this structure will consist of steel frame, brick veneer and masonry blocks. The floors of the building are anticipated to be constructed as slab-on-grade floor members supported by natural or building pad fill soils. The final grades are expected to coincide with the existing grades with minor cutting and filling. The maximum loadings associated with the proposed structure are expected to be as follows:

Column Load:	60 kips
Wall Load:	2 to 3 kips/linear ft
Floor Load:	200 to 300 lbs/sq ft

PURPOSE AND SCOPE OF SERVICES

The purpose of this study is to obtain information on the general subsurface soil and ground water conditions at the proposed project site. The subsurface materials encountered were then evaluated with respect to the available project information and site characteristics. In this regard, engineering assessments for the following items were formulated:

1. Development of shallow subsurface soil and ground water conditions within the proposed development.

2. Feasibility of utilizing a shallow foundation system for support of the proposed structure with slab-on-grade floor members.

3. Design parameters required for the foundation systems, including foundation minimum sizes, allowable bearing pressures, minimum bearing elevations and estimated total and differential settlements. Design criteria for coefficient of friction for shallow foundation bearing on soils including lateral earth pressures on walls.

4. Soil subgrade preparation, stripping, undercutting (if required), grading and compaction. Engineering criteria for placement and compaction of approved structural fill materials including but not limited to slope stability, temporary excavation systems and dewatering.

5. Suitability and availability of in-situ materials that may be moved during site grading for use as structural fill in the building areas, as pavement subgrade fill soils and as general backfill.

6. General location and description of potentially deleterious materials encountered in the borings performed which may interfere with construction progress or equipment performance, including existing fills or surficial organic.

7. Identified critical foundation systems and pavement structural section designs and/or construction details, including ground water levels and ground water seasonal fluctuations.

8. Pavement design and construction recommendations, considering the encountered subgrade soils and the measured ground water condition. The actual pavement structural section should be designed by the project "Civil" Engineer based on design traffic volumes and vehicle classification.

9. Discussed construction considerations for foundation excavations, ground water control, drainage during construction, temporary side slopes, in-situ soil suitability and unsuitable soil removal.

The following services were provided in order to achieve the preceding objectives:

1. Reviewed readily available published geologic and topographic information. This published information was obtained from the Soil Survey published by the United States Department of Agriculture (USDA) Soil Conservation Service (SCS).

2. FES executed a program of subsurface exploration consisting of subsurface sampling and field testing. FES performed three (3) Standard Penetration Test (SPT) borings at locations within the area planned for construction. The SPT borings were performed within the structure area and were drilled to an approximate depth of twenty (20) feet below the existing grades. The SPT borings were performed with the use of a power drill rig, in general accordance with ASTM-1586 test method. In the SPT borings, soil samples were collected and Standard Penetration Test resistance N-values were measured virtually continuously for the top ten (10) feet and on intervals of five (5) feet thereafter.

3. FES performed three (3) auger borings to an approximate depth of five (5) feet below the existing grades for the pavement areas. In addition, we collected three (3) bulk soil samples from the proposed pavement area subgrade soils for California Bearing Ratio (CBR) testing.

4. Visually classified and stratified representative soil samples in the laboratory using the Unified Soil Classification System (USCS) in general accordance with ASTM D-2487 and D-2488. FES conducted a limited laboratory testing program. The

laboratory testing program consisted of performing grain-size determination (-#200 sieve), moisture content determination, moisture-density relations (Standard Proctor), Atterberg Limits (liquid and plastic limits) and CBR testing. Identified soil conditions at the boring locations and formed an opinion of the site soil stratigraphy.

5. Collected ground water level measurements in the borings performed.

6. The results of the field exploration and laboratory testing program were utilized in performing engineering evaluation, analysis and in the formulation of foundation system and pavement design recommendations. The results of the field exploration, laboratory testing program, design and construction recommendations are presented in a comprehensive geotechnical engineering report prepared by a Professional "Geotechnical" Engineer.

Report Format

This report begins with a discussion of the field and laboratory programs followed by a description of the general subsurface conditions and earthwork recommendations. Evaluations and recommendations are presented for the selected foundation system followed with floor slab recommendations, pavement design recommendations, quality control during construction and report limitations. The appendix of this report contains California Bearing Ratio (CBR) Tests [Table 1], the USDA Soil Conservation (SCS) Survey Map [Figure 1], Soil Boring Location Sketch [Figure 2], Boring Profile Sheets and Laboratory Test Results Figures.

FIELD EXPLORATION

In order to explore the general foundation soil types and to aid in developing associated design parameters, a total of three (3) Standard Penetration Test (SPT) soil borings were drilled at locations which were within the proposed structure area. In addition, we performed three (3) auger borings and obtained three (3) bulk soil samples within the proposed pavement areas. These boring locations were staked by FES based on proposed site plans for the fire station and existing site topographic features. The approximate location of the borings are illustrated on Figure 2, which has been included in the appendix of this report. The SPT borings were drilled to an approximate depth of twenty (20) feet and the auger borings were drilled to an approximate depth of five (5) feet.

SPT Borings

The SPT borings were performed with the use of an all terrain vehicle (ATV) mounted drill rig utilizing mud drilling (MD) procedures following access clearance. The soil sampling was performed in general accordance with the American Society of Testing and Materials (ASTM) Test Designation D-1586. These samples were taken continuously from the ground surface to an approximate depth of ten (10) feet and on five (5) foot intervals thereafter. Representative portions of these soil samples were collected, labeled and transferred to our office for classification, laboratory testing and analysis.

Auger Borings

The auger borings were performed with the use of a three (3) inch bucket auger. The soil sampling was performed in general accordance with the American Society of Testing and Materials (ASTM) Test Designation D-1452. These samples were taken continuously from the ground surface to boring termination depth. Representative portions of these soil samples were collected, labeled and transported to our office for classification, laboratory testing and analysis.

Bulk Soil Sampling

The bulk soil samples were obtained in the field from the proposed pavement areas at approximate depths ranging from one-half (0.5) to two (2) feet below the existing grades. The location of the bulk soil samples are shown on Figure 2 in the appendix of this report.

LABORATORY TESTING

The soil samples were transported to our laboratory and were classified by the "Geotechnical" Engineer using the Unified Soil Classification System (USCS) in general accordance with ASTM test designations D-2487 and D-2488. Representative soil samples were subjected to grain-size determination (- #200 Sieve) and moisture content determination. Additionally, we performed moisture-density relations (Standard Proctor), Atterberg Limits and California Bearing Ratio (CBR) tests. The laboratory test results are presented in a tabular format below and in the appendix of this report.

LABORATORY TEST	NO. OF TESTS
Grain-Size Determination (Full Sieve)	3
Atterberg Limits (Plastic & Liquid Limits)	3
Moisture Content Determination	3
Moisture-Density Relations (Std. Proctor)	3
California Bearing Ratio (CBR)	3

LOCATION	APPROX SAMPLE DEPTH (feet)	NATURAL MOIST CONTENT (%)	-#200 SIEVE (%)	ATTERBERG LIMITS		USCS	OPT. MOIST. CONTENT (%)	MAX DRY DENSITY (pcf)	CBR VALUE (%)
				LL (%)	PI (%)				
CBR-1	1 - 2	4.7	43.2	16.9	NP	SM	10.0	117.2	21.7
CBR-2	1 - 2	4.5	57.0	17.2	NP	ML	10.4	123.1	4.3
CBR-3	1 - 2	5.9	52.3	19.3	NP	ML	10.5	121.4	3.3

GENERALIZED SUBSURFACE CONDITIONS

James City County Soil Survey

The "Soil Survey of York and James City Counties and the City of Williamsburg, Virginia", published in 1985 by the United States Department of Agriculture (USDA) Soil Conservation Service (SCS), was reviewed for general near-surface soil information within the general project vicinity. This information indicated that there is two (2) primary mapping units [map numbers 11C and 29B] within the proposed project area. The USDA Soil Conservation Service (SCS) Survey map for the project vicinity is presented on Figure 1 in the appendix of this report. The map soil units encountered are as follows:

SOIL SERIES	SOIL TYPE & DEPTH (INCHES)	USCS	USDA SEASONAL HIGH GROUNDWATER TABLE		K(2) (IN/HR)	SHRINK/SWELL POTENTIAL
			DEPTH (FEET)	MONTHS		
Craven Uchee Complex (11C)	0-9 Fine sandy loam	ML, CL-ML	2.0 - 3.0	Dec - Apr	0.6 - 2.0	Low
	9-30 Clay, silty clay, silty clay loam	SM, SM-SC, CH			0.06 - 0.2	Moderate
	30-72 Sandy clay loam, sandy loam, loamy sand	SM, SM-SC, SC			0.2 - 6.0	Low
Slagle Fine Sandy Loam (29B)	0-9 Fine sandy loam	SM, SC, ML, CL	1.5 - 3.0 "Perched"	Nov. - Apr	2.0 - 6.0	Low
	9 - 25 Fine sandy loam, sandy clay loam, loam	SC, SM-SC, CL, CL - ML			0.6 - 2.0	Low
	25 - 60 Sandy clay loam, loam, clay loam	SC, CL			0.06 - 0.6	Moderate

(1) USCS= Unified Soil Classification System
(2) K = Permeability

Subsurface Soil Conditions

Soil stratification was based on visual examination of the recovered soil samples, laboratory testing and interpretation of the field boring logs by an experienced "Geotechnical" Engineer. The boring stratification lines represent the approximate boundaries between soil types of significantly different engineering properties; however, the actual transition may be gradual. In some cases, small variations in properties not considered pertinent to our engineering evaluation may have been abbreviated or omitted for clarity. The boring profiles present the conditions at the particular boring location and variations do occur among the borings and between soil samples. On this basis, the subsurface soils encountered generally consisted of a minimum of nine (9) inches of dark brown silty sand (SM) with roots "Topsoil" underlain by a three (3) layer soil configuration.

The initial soil layer was encountered from below the "Topsoil" to an approximate depth of two (2) feet below the existing ground surface. This soil layer consisted of a tan, dry, silty sand (SM). The Standard Penetration Test N-values recorded within this soil layer were typically on the order of twenty-two (22) blows per foot (bpf), indicating this soil layer to be of a medium dense relative density.

The second soil layer was encountered from an approximate depth of two (2) feet to a depth of eighteen (18) feet below the existing ground surface. This soil layer consisted of a brown to gray, dry to saturated, sandy clay (CL). The Standard Penetration Test N-values recorded within this soil layer typically ranged from fourteen (14) to forty-three (43) bpf, indicating this soil layer to be of a stiff to hard consistency.

The final soil layer was encountered from an approximate depth of eighteen (18) feet to boring termination depth [an approximate depth of twenty (20) feet below the existing ground surface]. This soil layer consisted of a brown, saturated, slightly silty sand (SP-SM). The Standard Penetration Test N-value recorded within this soil layer was on the order of sixteen (16) bpf, indicating this soil layer to be of a medium dense relative density.

The soils encountered typically have moderate potential for shrink/swell behavior to moisture variations. Specific details concerning the subsurface materials and conditions encountered at each test location during the subsurface exploration program may be obtained from the soil boring profiles located in the appendix of this report.

Ground Water Conditions

The existing ground water was recorded immediately after drilling during the time of our subsurface exploration on August 19, 1998, and corroborated through a visual examination of the obtained soil samples. The ground water level was encountered at an approximate depth of ten (10) feet below the existing ground surface at the tested locations. It should be noted, that ground water levels tend to fluctuate during periods of prolonged drought and extended rainfall and may be effected by man-made influences. In addition, a seasonal effect may also occur in which higher ground water levels are normally recorded in rainy seasons. In this regard, it is estimated that the seasonal normal high ground water level will be encountered at an approximate depth range of seven (7) to eight (8) feet below the existing ground surface. However, a "perched" ground water condition may be encountered along the existing ground surface following periods of significant rainfall.

If the ground water level is critical to design or construction, ground water observation wells should be installed on-site to monitor ground water fluctuations over a period of time and permit more accurate determinations of wet season and dry season levels.

EARTHWORK RECOMMENDATIONS

General

The soil borings performed indicated a minimum of nine (9) inches of "Topsoil" overlie the majority of the site was observed. In general, the subsurface soils encountered in the borings performed consisted of medium dense silty sand (SM) to an approximate depth of two (2) feet followed by stiff to hard sandy clay (CL) to an approximate depth of eighteen (18) feet. Underlying the sandy clay (CL) and extending to boring termination depth [an approximate depth of twenty (20) feet below the existing grades], a medium dense, brown slightly silty sand (SP-SM) was encountered.

Clearing

Prior to construction, the location of any existing underground utility lines within the construction area should be established. Provisions should then be made to relocate any interfering utility lines within the construction area to appropriate locations. In this regard, it should be noted that if underground pipes are not properly removed or plugged, they may serve as conduits for subsurface erosion which subsequently may result in excessive settlements.

The site should also be cleared; this primarily includes removing the "Topsoil" surficial layer, brush, trees and the soil stock pile observed on-site. FES recommends that the unsuitable materials, brush and trees be removed to the satisfaction of a Professional "Geotechnical" Engineer, prior to beginning construction at this site. Based on the near-surface soils encountered, it is expected that a minimum of three (3) inches of "Topsoil" will be required to be removed from the structure and pavement areas. We recommend that the clearing operations extend a minimum of five (5) feet beyond the structure area and two (2) feet outside the pavement areas. The unsuitable "Topsoil" removed from the proposed structure and pavement areas should be stockpiled in designated locations and utilized in areas to be grassed.

Grading

The excavated/cleared exposed subgrade should be evaluated by a Professional "Geotechnical" Engineer to confirm that all unsuitable surficial materials have been removed. Following the approval of the Professional "Geotechnical" Engineer, it is recommended that within the structure and pavement areas, the exposed subgrade be compacted to a dry density of at least 95.0 percent of the Standard Proctor maximum dry density in general accordance with ASTM test designation D-698 to a minimum depth of twelve (12) inches. The top six (6) inches of the final design subgrade elevation at the pavement areas should be compacted to a minimum of 100.0 percent of the Standard Proctor maximum dry density in general accordance with ASTM test designation D-698.

Prior to beginning compaction, soil moisture contents may need to be controlled in order to facilitate proper compaction. If less moisture is necessary to achieve compaction objectives, then the soil should be properly aerated; if additional moisture is necessary to achieve compaction objectives, then water should be applied in such a way that it will not cause erosion or removal of the subgrade soils. A moisture content within three (3) percentage points of the optimum indicated by the Standard Proctor test (ASTM D-698) is recommended.

Following the completion of compaction operations, the exposed compacted subgrade should be proof rolled with a fully-loaded tandem wheeled dump truck to check for soft pockets materials hidden beneath a thin crust of better soil. Depending on the conditions of these exposed soils, some undercut may be expected to become necessary. Any soft, yielding areas should be removed and replaced with a well-compacted material under the guidance of a Professional "Geotechnical" Engineer or their representative.

Structural Fill

All materials to be used for backfill or compacted fill construction should be evaluated and tested by a consulting firm that specializes in construction materials testing prior to placement to determine if they are suitable for the intended use. Suitable structural fill materials should consist of fine to medium sand with less than thirty-five percent (35%) passing the No. 200 sieve, having a liquid limit less than forty (40) percent and plasticity index less than ten (10). This material may be classified as GP, GW, SW, SP, SP-SM, SM, SM-SC, and/or SC, and should be free of rubble, organic, debris and other deleterious material. Additionally, all excavated in-situ soils which do not contain debris, organic matter and classified as "Topsoil" may be utilized upon classification and approval by a Professional "Geotechnical" Engineer.

All structural fill should be compacted to a dry density of at least 95.0 percent of the Standard Proctor maximum dry density (ASTM D-698). In general, the compaction should be accomplished by placing the fill in maximum twelve (12) inches loose lifts and mechanically compacting each lift to at least the specified minimum dry density.

Backfill in utility trenches and beneath structure areas should be compacted in four (4) to six (6) inch lifts to the above specified densities using hand compaction equipment. In addition, in order to facilitate construction, the soils utilized to backfill utility trenches should consist of clean sand with less than twenty percent (20%) passing the No. 200 Sieve (SP, SP-SM and SM). A qualified, experienced, and certified Engineering Inspector under the direct supervision of a Professional "Geotechnical" Engineer should perform field density tests on each lift as necessary to assure that adequate compaction is achieved.

Foundation Excavations

All foundation excavations should be observed by a Professional "Geotechnical" Engineer or their representative to explore the extent of any fill and excessively loose, soft, or otherwise undesirable materials. If soft pockets are encountered in the foundation excavations, the unsuitable materials should be removed and the foundation base may be located at a lower elevation. Alternatively, the proposed foundation base elevation may be re-established by backfilling after the undesirable material has been removed. This backfilling may be done with a very lean concrete, flowable fill or with a well-compacted, suitable fill such as clean sand, gravel, or crushed #57 or #67 stone. Sand backfill should be compacted to a dry density of at least 95.0 percent of the Standard Proctor maximum dry density (ASTM D-698), as previously described. Immediately prior to reinforcing steel placement, it is suggested that the bearing surfaces of all foundation areas be compacted using hand operated mechanical tampers. In this manner, any localized areas which have been loosened by excavation operations should be adequately recompacted.

Soils exposed in the bases of all satisfactory foundation excavations should be protected against any detrimental change in conditions such as from physical disturbance or rain. Surface run-off water should be drained away from the excavations and not be allowed to pond. If possible, all foundation concrete should be placed the same day the excavation is made. If this is not possible, the foundation excavations should be adequately protected.

Temporary Side Slopes

Side slopes for temporary excavations may stand near one (1) horizontal to one (1) vertical (1H:1V) for short dry periods of time and a maximum excavation depth of four (4) feet. Where restrictions do not permit slopes to be constructed as recommended above, the excavation should be shored in accordance with current OSHA requirements. Furthermore, open-cut excavations up to a maximum depth of ten (10) feet (for periods longer than 24 hours) should be properly de-watered and sloped on 1½H:1V or flatter slopes or be braced using an approved bracing plan. In addition, any open-cut excavations adjacent to existing structures should be evaluated by a geotechnical engineer on a case-by-case basis. During foundation construction, excavated materials should not be stockpiled at the top of the slope within a horizontal distance equal to the excavation depth.

Ground Water Control

Depending upon ground water levels at the time of construction, some form of dewatering may be required to achieve the required compaction. Ground water can normally be controlled in shallow excavations with a sump pump. During subgrade soil preparation any plastic soils below design grade could become disturbed by construction activities. If this becomes the case, the contractor may be directed by the Professional "Geotechnical" Engineer or his representative to remove the disturbed or pumping soils to a depth of 12 to 18 inches below design grade and backfill the area with structural fill. Depending on the seasonal conditions, some seepage from water bearing pervious seams located at shallow depths may occur. It is anticipated that such seams could be handled by simple de-watering methods such as by pumping from sumps. We do not anticipate that the ground water will interfere with construction operations, however, during prolonged rain events the site should be positively graded to preventing ponding.

On-Site Soil Suitability

All materials to be used for backfill or compacted fill construction should be evaluated and, if necessary, tested by a consulting firm that specializes in construction materials testing, prior to placement to determine if they are suitable for the intended use. In general, based on the boring results, the majority of the on-site silty sand (SM) soils are expected to be acceptable for use as structural fill in the structure and pavement areas and as general subgrade fill and backfill in other areas, provided the fill material is free of rubble, clay, rock [greater than four (4) inches], roots and organic. The sandy clay (CL) and sandy silt (ML) soils are expected to be moisture sensitive, difficult to compact and obtain stability. However, utilizing the sandy clay (CL) soils should be at the discretion of the Owner. Borrow materials used as fill, should be approved by a Professional "Geotechnical" Engineer prior to their acquisition.

FOUNDATION DESIGN RECOMMENDATIONS

The following design recommendations have been developed on the basis of the previously described project characteristics and subsurface conditions encountered. If there is any change in these project criteria, including project location on the site, a review must be made by FES to determine if any modifications in the recommendations will be required. The findings of such a review should be presented in a supplemental report.

Once final design plans and specifications are available, a general review by FES is strongly recommended as means to check that the evaluations made in preparation of this report are correct and that earthwork and foundation recommendations are properly interpreted and implemented.

Bearing Capacity

Provided the previously described clearing, grading and compaction recommendations are properly performed, the results of our exploration and analysis indicated that the proposed facility can be supported by shallow spread footings. It is recommended that the building grades be selected so that normal seasonal high ground-water levels remain at least one (1) foot below foundation bases.

The foundations can be designed for net allowable soil pressures which do not exceed 3000 pounds per square foot (psf) for both column (square type) and wall (strip type) foundation systems. In using net pressures, the weight of the foundation and backfill over the foundation, including the weight of the floor slab, need not be considered. Therefore, only loads applied at or above the finished floor need to be used for dimensioning the foundation systems.

Foundation Characteristics

In order to develop the recommended bearing capacity, the base of all exterior foundation systems should be embedded a minimum of twenty-four (24) inches below adjacent existing natural and/or compacted final grades on all sides with the interior foundation systems placed immediately below the floor slabs. Strip or wall foundation systems should be a minimum of twenty-four (24) inches wide and isolated pad or column foundation systems should have a minimum plan dimension of four and one half (4.5) feet for bearing capacity considerations, even though the allowable soil design capacity is not fully developed. The recommended 24-inch foundation systems base embedment is considered sufficient to provide adequate cover against frost penetration to the bearing soils.

Settlement

The foundation soils located within the influence of the maximum stress from the shallow foundations consisted of stiff to hard sandy clay (CL). In this regard, the majority of settlements should occur during construction as dead loads are imposed. The total settlements of isolated columns should not exceed approximately one (1) inch and the total settlements of wall foundations should not exceed approximately ¾ inch with differential settlements on the order of fifty percent (50%) of the total settlements, with the subgrade preparation recommended herein.

Differential settlements of these magnitudes are usually considered tolerable for the anticipated lightly loaded building construction; however, the tolerance of the proposed structure to the predicted total and differential settlements should be confirmed by the "Structural" Engineer.

Modulus of Subgrade Reaction

Based on the soil conditions encountered at the site, the standard penetration resistance N-values and the recommended depth of footing bottoms shown above; the modulus of vertical subgrade reaction "Kvs" should be on the order of 300 kips per cubic foot (kcf). However, if the soil conditions are improved in the construction phase a higher value can be expected to be obtained. This value can range from 300 to 400 kcf depending on the soil improvement techniques employed during the earthwork phase.

Lateral Earth Pressures

Foundation walls constructed below existing grades or which have adjacent compacted fill will be subjected to lateral at-rest or active earth pressures. Walls which are restrained at the top and bottom will be subjected to at-rest soil pressures equivalent to a fluid density of 52 pounds per cubic foot (pcf). Walls which are not restrained at the top and where sufficient movement may mobilize active earth pressures, an equivalent fluid density of 35 pcf can be used. At locations where the base of the walls extends below the ground water table, soil pressures can be calculated using ½ the equivalent fluid densities given above, however, hydrostatic and seepage forces must then also be included. The above pressures do not include any surcharge loads for sloped backfill, point or area loads behind the walls and assume that adequate drainage provisions have been incorporated.

The lateral earth pressures acting on retaining walls will be resisted by the sliding resistance forces along the base of the wall foundation system base and the passive resistance resulting from the foundation system embedment at the wall toe. Passive resistance could be neglected for a safer design [due to possible excavation in front of the wall at a future time].

FLOOR SLAB

The floor slabs may be constructed as slab-on-grade members provided the previously recommended earthwork activities are carried out properly. It is recommended that all ground floor slabs be directly supported by at least a four (4) inch layer of relatively clean, compacted, poorly graded sand (SP) or gravel (GP) with less than five (5) percent passing the No. 200 Sieve (0.074 mm). The purpose of this layer is to act as a capillary barrier and to equalize moisture conditions beneath the slab.

We recommend that the floor slab bearing soils be covered by a lapped polyethylene sheeting in order to minimize the potential for floor dampness which can affect the performance of glued tile and carpet. In addition, this polyethylene sheeting is also expected to provide a limited barrier to radon gas infiltration into the building from the subsurface soils. This membrane should consist of a minimum six (6) mil single layer of non-corroding, non-deteriorating sheeting material placed to minimize seams and to cover all of the soil below the building floor. This membrane should be cut in cross shape for pipes or other penetrations; the membrane should extend to within ½ inch of all pipes or other penetrations. All seams of the membrane should be lapped at least twelve (12) inches. Punctures or tears in the membrane should be repaired with the same or compatible material.

PAVEMENT DESIGN RECOMMENDATIONS

General

Based on our subsurface exploration program at the subject site, we encountered materials consisting of silty sand (SM), sandy silt (ML) and sandy clay (CL) within the upper five (5) feet. These soils were medium dense and stiff to very stiff in consistency.

Subgrade

Due to encountering soils with moderate potential for shrink/swell and low CBR values within the upper four (4) feet at this site, stabilization will be required. The existing shallow subsurface soils should be acceptable for construction and support of a flexible type pavement section, provided subgrade preparation operations recommended in this report are properly performed. This stabilization could consist of increasing the crushed stone aggregate subbase/base thickness, utilizing a layer of geogrid [TENSAR BX-1100 or approved equivalent] or soil/lime mixing. Based on the laboratory tests performed on the shallow soils encountered, the California Bearing Ratio (CBR) test results indicated CBR values ranging from 3.3 to 21.7, with an average value of 3.8 [excluding CBR- 1, 21.7]. Using the VDOT ⅔ design method, the recommended design CBR value for pavement design is 2.5. The complete CBR test results are shown on Table 1 attached to this report.

Based on the near-surface soils encountered during our geotechnical exploration, and our review of the Pavement Design Guide for Subdivision and Secondary Roads in Virginia published by the Virginia Department of Transportation (VDOT), the near-surface soils consisted of Medium Resilient Soils which are expected to have a Soil Resiliency Factor of 2.5. Based on the respective design CBR value and Soil Resiliency Factor, the average Soil Support Value (SSV) for this project is expected to be six (6).

Subbase/Base Layer

A crushed stone aggregate or crushed concrete subbase/base material should be utilized prior to placement of the bituminous concrete layers. This subbase/base material should meet current Virginia Department of Transportation (VDOT) requirements for 21B, Type I Aggregate material or approved crushed concrete, including compaction to 100.0 percent of its maximum dry density as determined by the Standard Proctor test (D-698) and a minimum California Bearing Ratio (CBR) of 30 percent. Due to the low CBR values, we recommend utilizing a minimum subbase/base thickness of eight (8) inches for the light and heavy traffic areas in general accordance with the latest VDOT Pavement Design Guide for Subdivision and Secondary Roads in Virginia.

Bituminous Concrete Pavement

Due to the low CBR values and the heavy traffic, the bituminous concrete should consist of two (2) layers for the access pavement section and one (1) layer for the parking spaces. The bituminous concrete base layer should consist of three (3) inches of VDOT Type BM-2 course and the bituminous concrete surface layer should consist of two (2) inches of VDOT Type SM-2A course for high and heavy traffic volume pavement areas. The bituminous concrete layer for the parking spaces should consist of two and one half (2.5) inches of VDOT Type SM-2A course layer. The pavement structural section should be placed in general accordance with the latest VDOT Road and Bridge Specifications.

Average Daily Traffic

Based on our review of the pavement subgrade soils, the laboratory test results and the proposed traffic, we expect the proposed pavement structural sections will provide the following Thickness Indices (D) and be capable of supporting the following Average Daily Traffic.

Roadway	Design Pavement Structural Section	SSV	Thickness Index	Traffic Volume (VPD)
Heavy and Access Areas	One layer Geogrid (TENSAR BX-1100 or approved equivalent) "If required" 8" Aggregate Subbase VDOT Type 21B or Crushed Concrete 3" VDOT Type BM-2 Bituminous Concrete Base Course 2" VDOT Type SM-2A Bituminous Concrete Surface Course	6	16.1	1800
Parking Spaces	One layer Geogrid (TENSAR BX-1100 or approved equivalent) "If required" 8" Aggregate Subbase VDOT Type 21B or Crushed Concrete 2.5" VDOT Type SM-2A Bituminous Concrete Surface Course	6	12.2	500

It is important to note that the design method utilized assumes Heavy Commercial Vehicles (HCV) with two (2) or more axles will not exceed five percent (5%) of the total ADT.

Rigid Concrete Pavement Alternate

Based on the soil conditions encountered, laboratory test results, our experience with similar projects, Portland Cement Association (PCA), "Thickness Design for Concrete Highway and Street Pavements" Manual and VDOT Standards and Specifications, a minimum thickness of nine (9) inches should be utilized over a six (6) inch layer of VDOT 21B base layer or approved crushed concrete for the proposed high and heavy traffic volume areas. The concrete should have a minimum flexural strength of 650 pounds per square inch (psi) at twenty-eight (28) days in general accordance with ASTM C-78. We recommend a reinforcing steel mat, preferably No. 3 steel rebars be placed twelve (12) inches on center. If reinforcing steel is not utilized, longitudinal joints placed at intervals not exceeding eight (8) feet and to an approximate depth of three (3) inches should be constructed. In addition, dowels should be placed twelve (12) inches on center at the longitudinal joints. The steel reinforcement within the concrete pavement should be designed by the "Civil" Engineer.

These recommendations are considered minimum for the site-soil and traffic conditions expected. However, we recommend the final pavement structural sections be determined by the project "Civil" Engineer using information obtained and reported in this geotechnical engineering services report and the actual anticipated traffic conditions for each pavement area at the project site.

Pavement Subgrade Preparation

The structural performance and service life of the pavement section is greatly dependent on the quality control during construction, as soil variations may occur along the construction site. As such, the following field control procedures are strongly recommended to ensure proper subgrade preparation and stability.

1. The development area plus a margin of two (2) feet should be stripped and cleared of surface vegetation, organic or root laden topsoil, roots and stumps (if encountered). Any "Topsoil" removed from the pavement areas should be stockpiled in designated locations and used in areas to be grassed. Any undercut soils removed from the pavement areas should be evaluated by a an experienced "Geotechnical" Engineer to determine their suitability as general subgrade fill material.

2. Compact the cleared, undercut and stripped subgrade areas to a minimum of 95.0 percent of the maximum Standard Proctor dry density in general accordance with ASTM D-698 for a minimum depth of twelve (12) inches.

3. Compaction should be accomplished with a large sheepsfoot roller or equivalent compacting equipment. A minimum of eight (8) overlapping passes should be made at the bottom of the excavation in a cris-cross pattern by the compacting equipment. The compacting equipment should have a minimum static drum weight on the order of six (6) to eight (8) tons. Care should be exercised when operating the compactor adjacent to existing structures. We recommend performing static compaction within fifty (50) feet of existing structures (if any).

4. Prior to beginning compaction, soil moisture contents may need to be controlled in order to facilitate proper compaction. If additional moisture is necessary to achieve compaction objectives of improved fill, then water should be applied in such a way that it will not cause erosion or removal of the subgrade soils. A moisture content within three (3) percentage points of the optimum indicated by the Standard Proctor test in general accordance with ASTM D-698 is recommended prior to compaction.

5. Proof-roll the excavated/compacted subgrade area. Proof-rolling should be accomplished with a fully-loaded, tandem-wheeled dump truck not weighing less than twenty (20) tons to check for pockets of soft materials hidden beneath a thick crust of better soil. Depending on the conditions of these exposed soils, some undercutting, Geogrid [TENSAR BX-1100 or approved equivalent] and/or soil/lime mixing soil stabilization may become necessary. Any soft, yielding areas should be removed and replaced with a well-compacted material under the guidance of a Professional "Geotechnical" Engineer.

6. Following satisfactory completion of the initial compaction/proof-rolling at the excavated area, the proposed pavement areas may be brought up to finished subgrade levels. Approved sand fill should be placed in loose lifts not exceeding twelve (12) inches in thickness and should be compacted to a minimum of 95.0 percent of the maximum Standard Proctor dry density in general accordance with ASTM D-698.

7. The top six (6) inches of the final design subgrade elevation should be compacted to a dry density of at least 100.0 percent of the Standard Proctor maximum dry density (ASTM D-698). Additionally, the base should be compacted to a dry density of at least 100.0 percent of the Standard Proctor maximum dry density (ASTM D-698) and proof-rolled under the supervision of a Professional "Geotechnical" Engineer.

Utility Trenches

Backfill in utility trenches that are located within the roadway right-of-way areas should be compacted using hand compaction equipment in four (4) to six (6) inch loose lifts to a dry density of at least 95.0 percent of the Standard Proctor maximum dry density (D-698). An experienced Engineering Technician, under the direct supervision of an experienced "Geotechnical" Engineer should perform field density tests on each twelve (12) inches of compacted fill and as necessary to assure that adequate compaction is achieved.

QUALITY CONTROL DURING CONSTRUCTION

FES recommends that quality control during the construction phase of the project be performed as follows:

Structure Areas

1. Perform compaction tests on the stripped subgrade prior to backfilling (if the stripped subgrade will be cut, then perform compaction testing on the final cut grade). The stripped subgrade should be compacted to 95.0 percent of the maximum dry density as determined by the Standard Proctor test to a minimum depth of one (1) foot. Perform compaction testing on any fill material placed within structures and utility areas.

2. Perform proof-rolling under the supervision of a Professional "Geotechnical" Engineer or his representative by utilizing a fully-loaded tandem-wheeled dump truck [approximate weight of twenty (20) tons].

3. Evaluate all foundation excavations by a Professional "Geotechnical" Engineer or his representative to determine the suitability and stability of the foundation bearing material.

4. Perform concrete inspection, sampling and testing by an experienced qualified, and certified Engineering Technician on all concrete pour operations, including but not limited to footings, slabs, walkways, etc.

5. Perform structural steel visual evaluation of bolts, welds, deck and deck welds, studs and connections.

6. Perform masonry, concrete, grout testing and inspection.

REPORT LIMITATIONS

The design recommendations have been developed on the basis of the previously described project characteristics and subsurface conditions. If there is any change in these project criteria, including project location on the site, a review must be made by FES to determine if any modifications in the recommendations will be required. The findings of such a review should be presented in a supplemental report.

These recommendations were developed from the information obtained in the test borings which depict subsurface conditions only at these specific locations and at the particular time designated on the boring profiles. Soil conditions at other locations may differ from conditions occurring at these boring locations. In addition, the passage of time may result in a change to the soil conditions at these boring locations. The nature and extent of variations between the borings may not become evident until the course of construction. If variations then appear evident, it will be necessary for a re-evaluation of the recommendations presented in this report. A complete re-evaluation of the previous recommendations will be performed after completing on-site observations during the construction period and noting the characteristics of any variation. We recommend that Foundation Engineering Science, Inc. be retained during the construction phase of this project as the Geotechnical Engineer of Records.

Our professional services have been performed, our findings obtained, and our recommendations prepared in accordance with generally accepted Geotechnical Engineering Principles and Practices. Foundation Engineering Science, Inc. is not responsible for the conclusions, opinions or recommendations made by others based on this geotechnical engineering services report.

APPENDIX

TABLE 1 - CALIFORNIA BEARING RATIO

TABLE 1
CALIFORNIA BEARING RATIO (CBR) TEST RESULTS
Fire Station - Alternate Route 5
James City County, Virginia

CBR No.	Approx. Location	Approx. Sample Depth (feet)	Soil Description	Unified Soil Classification System (USCS)	Natural Moisture Content (%)	Optimum Moisture (%)	Maximum Dry Density (pcf)	CBR Value (%)	Swell (%)	Passing #200 Sieve (%)	Resiliency Factor
CBR-1	AB-1	1-2	Light brown silty sand	SM	4.7	10.0	117.2	21.7	0.17	43.2	2.5
CBR-2	AB-2	1-2	Light brown sandy silt	ML	4.5	10.4	123.1	4.3	0.05	57.0	2.5
CBR-3	AB-3	1-2	Light brown sandy silt	ML	5.9	10.5	121.4	3.3	0.00	52.3	2.5

Notes: (1) See attached Figure 2 for plan location of each CBR sample.

FIGURES

Figure 1 - USDA Soil Conservation Map
Figure 2 - Boring and CBR Location Sketch

FIGURE 1

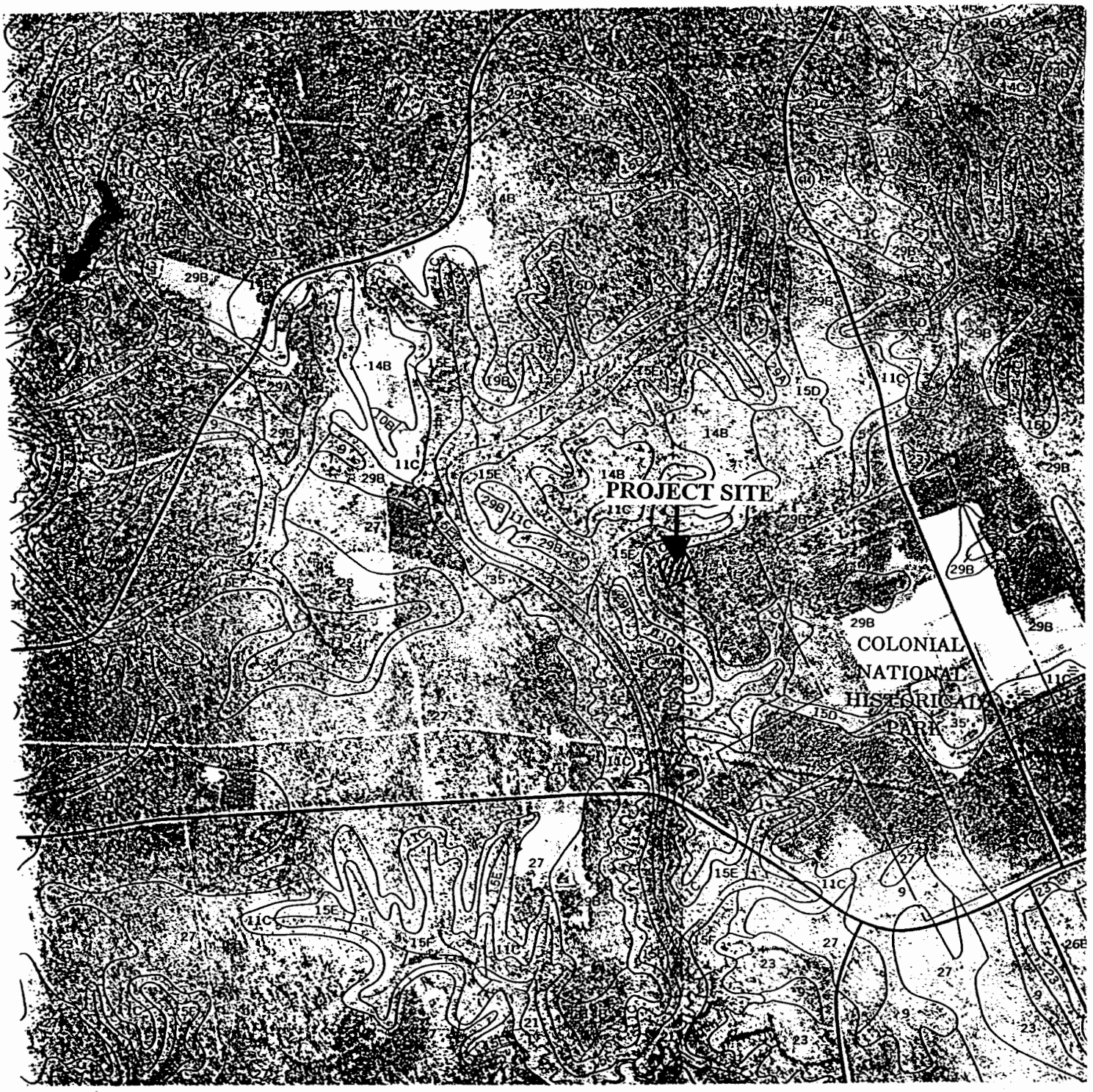

USDA SOIL CONSERVATION SURVEY MAP

"The Soil Survey of James City and York Counties and the City of Williamsburg, Virginia"

PROJECT NAME:	Fire Station - Alternate Route 5		
LOCATION:	James City County, Virginia	SCALE:	1":15840
FES PROJECT NUMBER:	1-81301	DATE:	August, 1998
CLIENT:	James City County		

FOUNDATION ENGINEERING SCIENCE, INC.

FIGURE 2

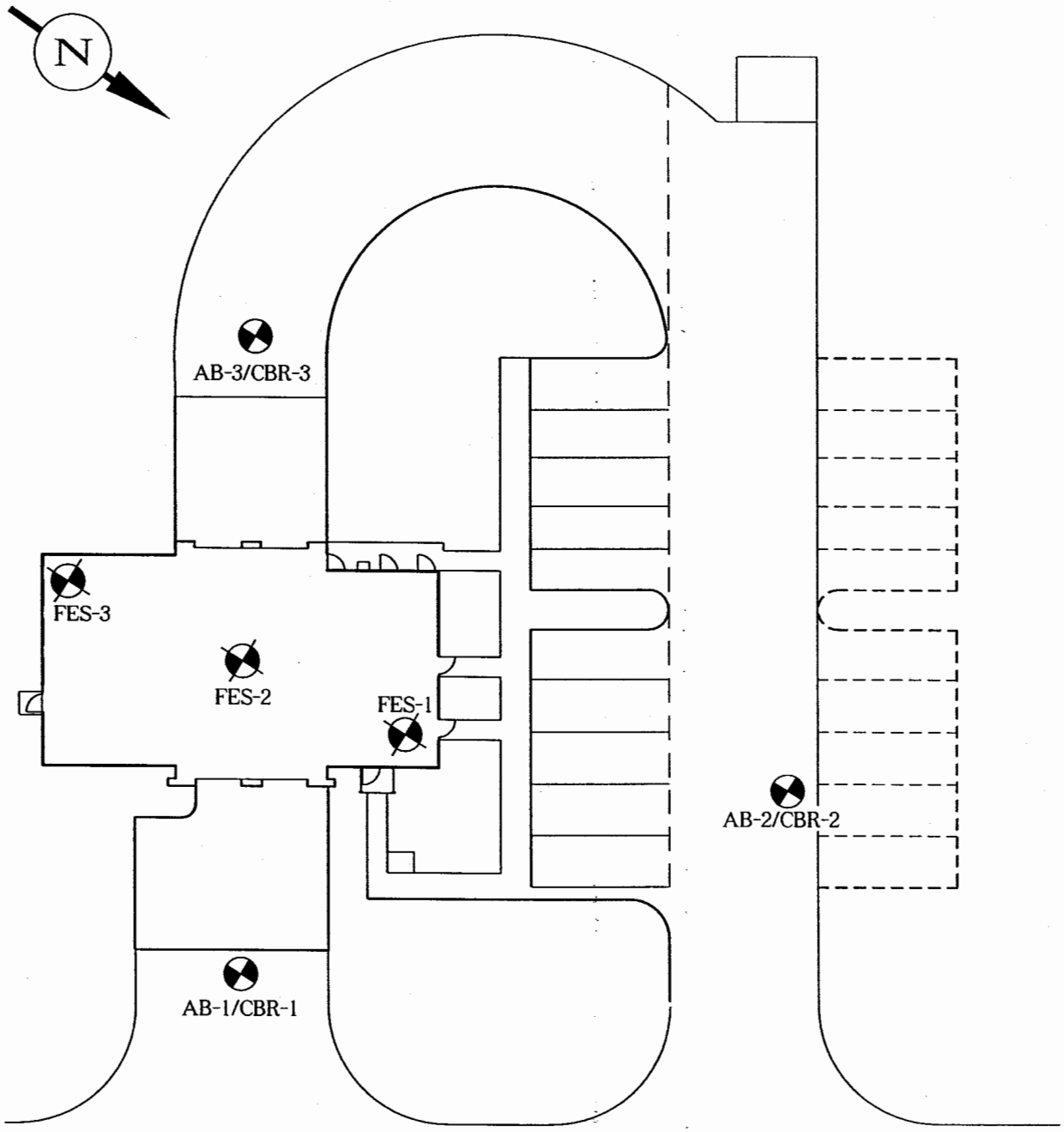

FIRE STATION PROPOSED ALTERNATE ROUTE 5
JAMES CITY COUNTY, VIRGINIA

FES

FOUNDATION ENGINEERING SCIENCE, INC.
11843-8 Conon Blvd.
Newport News, VA 23606
Phone: (757) 873-4113, Fax: (757) 873-4114

RSE	MM	RSE	JAMES CITY COUNTY
DESIGN BY	DRAWN BY	CHECKED BY	CLIENT
1-812301	NOT TO SCALE	08/27/98	FIGURE 2
PROJECT NO.	SCALE	DATE	SHEET

BORING PROFILE SHEETS

FOUNDATION ENGINEERING SCIENCE, INC.

PROJECT NAME: Fire Station, Alternate Route 5	**PROJECT NO.:** 1-81301	**BORING NO.:** B-1
CLIENT: James City County	**BORING LOCATION:** See Figure 2	**DATE:** August 19, 1998
PROJECT LOCATION: James City County, Virginia	**DRILLING METHOD:** Hollow Stem Auger	**BORING DEPTH:** 20 Feet
FES REPRESENTATIVE: J. Norman	**OBSERVED G.W.T.:** 10 Feet	**STATION NO.:** N/A

DEPTH (FEET)	LEGEND	SOIL SYMBOL	SOIL DESCRIPTION	SPT N-VALUE	REMARKS
0.00		SM	Tan, dry silty SAND Medium Dense	3-9-13-10	
		CL	Brown to gray, mottled, dry to saturated sandy CLAY Stiff to Hard	9-10-12-16	
5.00				13-22-21-22	
				12-13-13-16	
				12-10-8-10	
10.00					
				5-6-8-8	
15.00					
		SP-SM	Brown, saturated slightly silty SAND Medium Dense	5-7-9-9	
20.00			Boring Terminated @ 20 Feet		
25.00					

FOUNDATION ENGINEERING SCIENCE, INC.

PROJECT NAME: Fire Station, Alternate Route 5	**PROJECT NO.:** 1-81301	**BORING NO.:** B-2
CLIENT: James City County	**BORING LOCATION:** See Figure 2	**DATE:** August 19, 1998
PROJECT LOCATION: James City County, Virginia	**DRILLING METHOD:** Hollow Stem Auger	**BORING DEPTH:** 20 Feet
FES REPRESENTATIVE: J. Norman	**OBSERVED G.W.T.:** 10 Feet	**STATION NO.:** N/A

DEPTH (FEET)	LEGEND	SOIL SYMBOL	SOIL DESCRIPTION	SPT N-VALUE	REMARKS
0.00		SM	Tan, dry silty SAND Medium Dense	5-12-11-10	
		CL	Brown to gray, mottled, dry to moist sandy CLAY Very Stiff to Hard	12-10-10-9	
5.00				14-16-22-24	
				13-14-14-17	
		SC	Gray, moist to saturated clayey medium to coarse SAND Very Dense	24-48-36-14	
10.00					
		CL	Reddish brown, saturated sandy CLAY Stiff	4-6-7-9	
15.00					
		SP-SM	Brown, saturated slightly silty SAND Medium Dense	4-7-9-10	
20.00			Boring Terminated @ 20 Feet		
25.00					

FOUNDATION ENGINEERING SCIENCE, INC.

PROJECT NAME: Fire Station, Alternate Route 5	**PROJECT NO.:** 1-81301	**BORING NO.:** B-3
CLIENT: James City County	**BORING LOCATION:** See Figure 2	**DATE:** August 19, 1998
PROJECT LOCATION: James City County, Virginia	**DRILLING METHOD:** Hollow Stem Auger	**BORING DEPTH:** 20 Feet
FES REPRESENTATIVE: J. Norman	**OBSERVED G.W.T.:** 10 Feet	**STATION NO.:** N/A

DEPTH (FEET)	LEGEND	SOIL SYMBOL	SOIL DESCRIPTION	SPT N-VALUE	REMARKS
0.00		SM	Tan, dry silty SAND Medium Dense	4-10-10-12	
		CL	Brown to gray, mottled, dry to moist sandy CLAY Very Stiff to Hard	10-9-11-13 11-16-17-19 13-12-13-14	
5.00					
		SC	Gray, moist to saturated clayey medium to coarse SAND Medium Dense	13-15-12-11	
10.00					
		CL	Reddish brown, saturated sandy CLAY Stiff	6-7-7-9	
15.00					
		SP-SM	Brown, saturated slightly silty SAND Medium Dense	5-8-8-9	
20.00			Boring Terminated @ 20 Feet		
25.00					

FOUNDATION ENGINEERING SCIENCE, INC.

PROJECT NAME: Fire Station - Alternate Route 5	**PROJECT NO.:** 1-81301	**BORING NO.:** AB-1/CBR-1
CLIENT: James City County	**BORING LOCATION:** See Figure 2	**DATE:** August 18, 1998
PROJECT LOCATION: James City County, Virginia	**DRILLING METHOD:** Hand Auger	**BORING DEPTH:** 5 Feet
FES REPRESENTATIVE: J. Norman	**OBSERVED G.W.T.:** > 5 Feet	**STATION NO.:** N/A

DEPTH (FEET)	LEGEND	SOIL SYMBOL	SOIL DESCRIPTION	REMARKS
0.00		SM	Dark brown, moist silty fine SAND with roots "TOPSOIL"	
		SM	Tan, dry silty SAND	
		CL	Brown to gray, mottled, dry to moist sandy CLAY	
5.00			Boring Terminated @ 5 Feet	
10.00				

FOUNDATION ENGINEERING SCIENCE, INC.

PROJECT NAME: Fire Station - Alternate Route 5	**PROJECT NO.:** 1-81301	**BORING NO.:** AB-2/CBR-2
CLIENT: James City County	**BORING LOCATION:** See Figure 2	**DATE:** August 18, 1998
PROJECT LOCATION: James City County, Virginia	**DRILLING METHOD:** Hand Auger	**BORING DEPTH:** 5 Feet
FES REPRESENTATIVE: J. Norman	**OBSERVED G.W.T.:** > 5 Feet	**STATION NO.:** N/A

DEPTH (FEET)	LEGEND	SOIL SYMBOL	SOIL DESCRIPTION	REMARKS
0.00		SM	Dark brown, moist silty fine SAND with roots "TOPSOIL"	
		ML	Tan, dry to moist sandy SILT	
		CL	Brown to gray, mottled, dry to moist sandy CLAY	
5.00			Boring Terminated @ 5 Feet	
10.00				

FOUNDATION ENGINEERING SCIENCE, INC.

PROJECT NAME: Fire Station - Alternate Route 5	**PROJECT NO.:** 1-81301	**BORING NO.:** AB-3/CBR-3
CLIENT: James City County	**BORING LOCATION:** See Figure 2	**DATE:** August 18, 1998
PROJECT LOCATION: James City County, Virginia	**DRILLING METHOD:** Hand Auger	**BORING DEPTH:** 5 Feet
FES REPRESENTATIVE: J. Norman	**OBSERVED G.W.T.:** > 5 Feet	**STATION NO.:** N/A

DEPTH (FEET)	LEGEND	SOIL SYMBOL	SOIL DESCRIPTION	REMARKS
0.00		SM	Dark brown, moist silty fine SAND with roots "TOPSOIL"	
		ML	Tan, dry to moist sandy SILT	
		CL	Brown to gray, mottled, dry to moist sandy CLAY	
5.00			Boring Terminated @ 5 Feet	
10.00				

LABORATORY TEST RESULTS

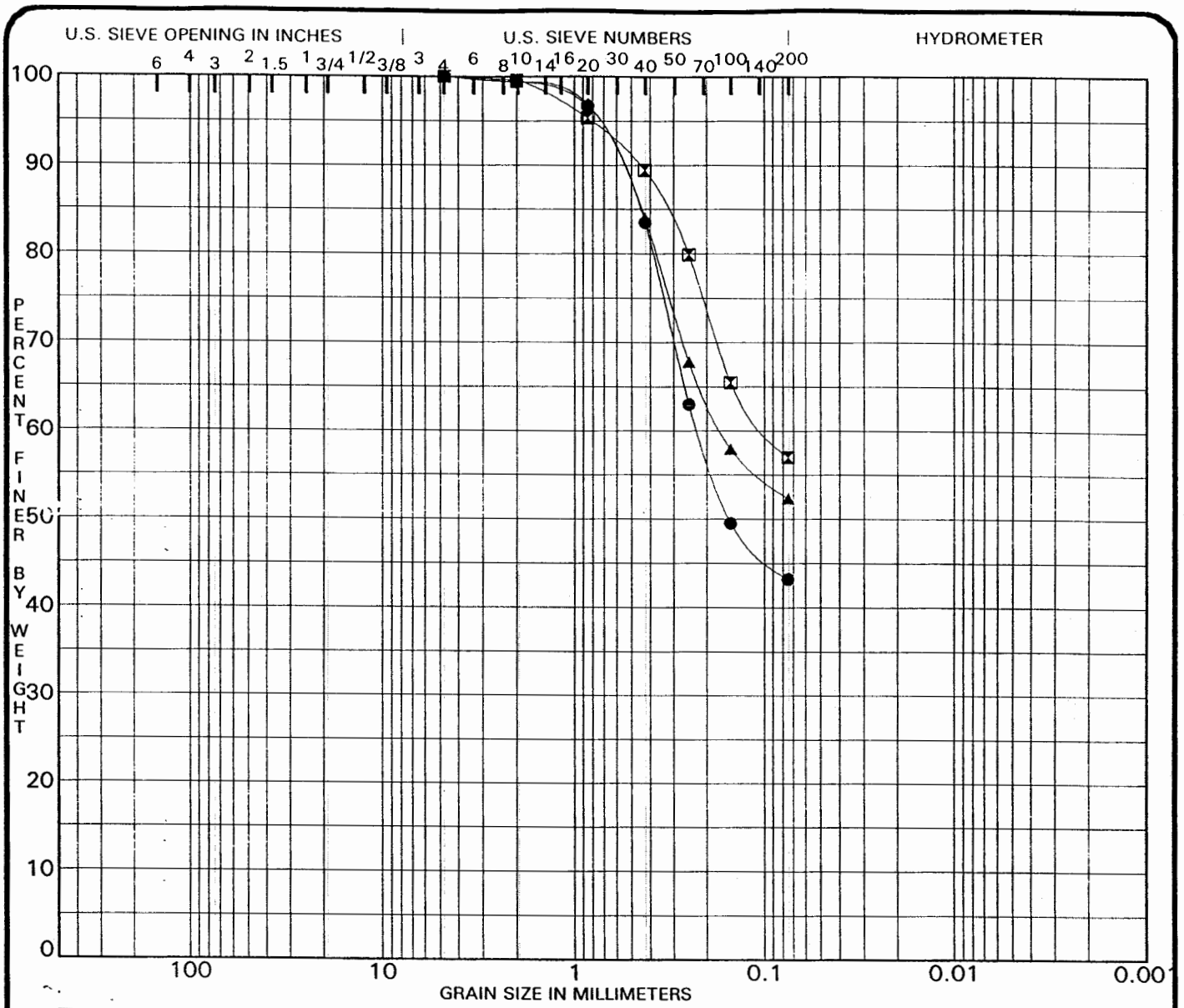

COBBLES	GRAVEL		SAND			SILT OR CLAY
	coarse	fine	coarse	medium	fine	

	Specimen Identification		Classification	MC%	LL	PL	PI	Cc	Cu
●	1	1.0	Light Brown Silty Sand	5	17	NP	17		
⊠	2	1.0	Light Brown Sandy Silt with trace Clay	5	17	NP	17		
▲	3	1.0	Light Brown sany Silt with trace clay	6	19	NP	19		

	Specimen Identification		D100	D60	D30	D10	%Gravel	%Sand	%Silt	%Clay
●	1	1.0	4.75	0.22			0.0	56.8	43.2	
⊠	2	1.0	4.75	0.10			0.0	43.0	57.0	
▲	3	1.0	4.75	0.17			0.0	47.7	52.3	

PROJECT Fire Station - James City County, Virginia

JOB NO. 1-81301
DATE 8/27/98

GRADATION CURVES

Foundation Engineering Science, Inc.
Newport News, Virginia

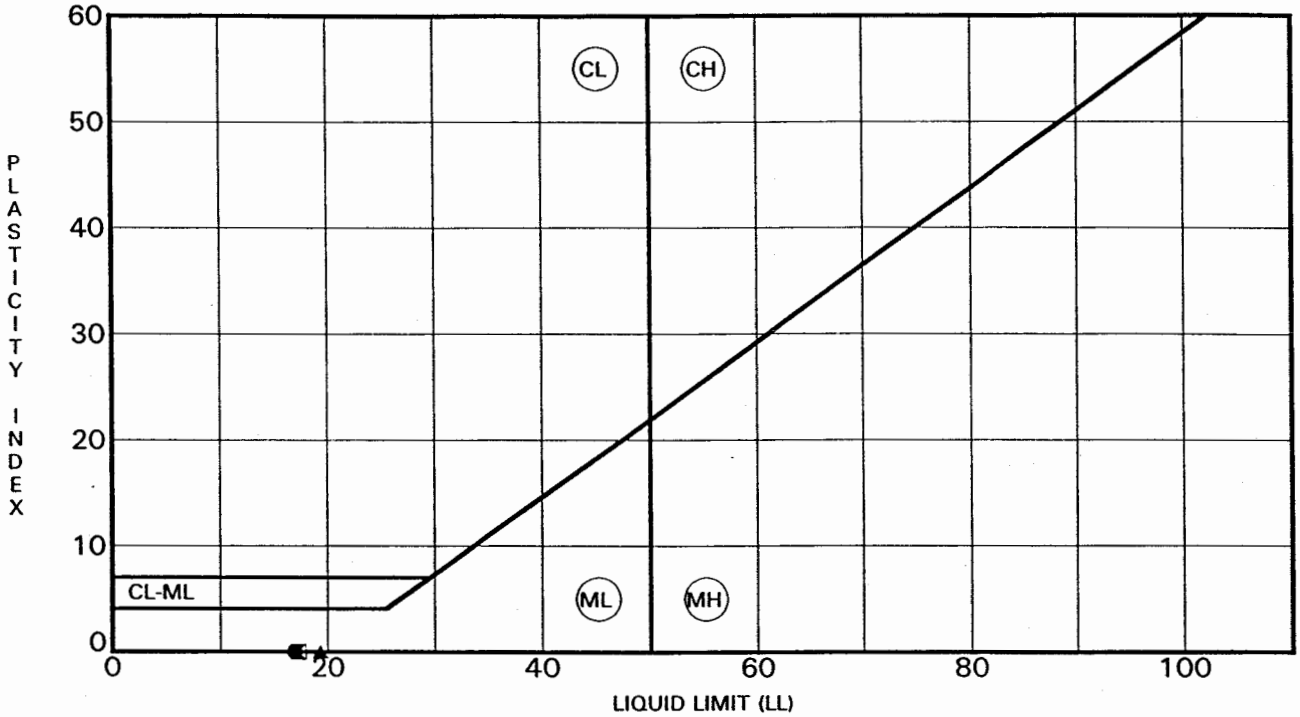

Specimen Identification			LL	PL	PI	Fines	Classification
●	1	1.0	17	17	NP	43.2	Light Brown Silty Sand
⊠	2	1.0	17	17	NP	57.0	Light Brown Sandy Silt with trace Clay
▲	3	1.0	19	19	NP	52.3	Light Brown sany Silt with trace clay

PROJECT Fire Station - James City County, Virginia

JOB NO. 1-81301
DATE 8/27/98

ATTERBERG LIMITS' RESULTS

Foundation Engineering Science, Inc.
Newport News, Virginia

FOUNDATION ENGINEERING SCIENCE, INC.
LABORATORY TESTING PROGRAM

CALIFORNIA BEARING RATIO (CBR) TESTING

Client	James City County	Date Sampled	August 18, 1998
Project Name	Fire Station - Alternate Route 5	Sample Depth (Feet)	1-2
Project Location	James City County, Virginia	Sample Location	CBR - 1
Project No.	1-81301.001	Sampled By	JN/TE
Sample No.	1	Remarks	

Laboratory Classification (ASTM & AASHTO Methods)

Sieve Size	Passing (%)	Proctor Result	Atterberg Limits	Sample Classification & Description
3/8"	100.0	Dry Density (pcf) 117.2	Liquid Limit 16.9	Light brown silty sand (SM)
No. 4	100.0			
No. 10	99.4		Plastic Limit NP	
No. 20	96.7			
No. 40	83.5	Moisture (%) 10.0	Plasticity Index NP	
No. 60	63.0			
No. 100	49.5			
No. 200	43.2			

CBR Test Result

Laboratory Result	Unsoaked CBR	Soaked CBR	Remarks
Moisture (%)	93.5	107.0	
Dry Density (%)	102.9	105.2	
Swell (%)	---	0.17	
Moisture After Soaking (%)	---	10.7	
CBR Value	33.7	21.7	
Comments			
Recommendations	We recommend utilizing CBR value of 21.7 for pavement.		

FOUNDATION ENGINEERING SCIENCE, INC.
LABORATORY TESTING PROGRAM

CALIFORNIA BEARING RATIO (CBR) TESTING

Client	James City County	Date Sampled	August 18, 1998
Project Name	Fire Station - Alternate Route 5	Sample Depth (Feet)	1-2
Project Location	James City County, Virginia	Sample Location	CBR - 2
Project No.	1-81301.001	Sampled By	JN/TE
Sample No.	2	Remarks	

Laboratory Classification (ASTM & AASHTO Methods)

Sieve Size	Passing (%)	Proctor Result	Atterberg Limits	Sample Classification & Description
3/8"	100.0	Dry Density (pcf) 123.1	Liquid Limit 17.2	Light brown sandy silt (ML)
No. 4	100.0			
No. 10	99.6		Plastic Limit NP	
No. 20	95.3			
No. 40	89.4	Moisture (%) 10.4	Plasticity Index NP	
No. 60	79.9			
No. 100	65.5			
No. 200	57.0			

CBR Test Result

Laboratory Result	Unsoaked CBR	Soaked CBR	Remarks
Moisture (%)	105.7	106.2	
Dry Density (%)	99.0	99.3	
Swell (%)	---	0.05	
Moisture After Soaking (%)	---	11.1	
CBR Value	4.3	8.3	
Comments			
Recommendations	We recommend utilizing CBR value of 4.3 for pavement design.Stabilization is expected to be required in the pavement areas where this bulk sample was obtained.		

FOUNDATION ENGINEERING SCIENCE, INC.
LABORATORY TESTING PROGRAM

CALIFORNIA BEARING RATIO (CBR) TESTING

Client	James City County	Date Sampled	August 18, 1998
Project Name	Fire Station - Alternate Route 5	Sample Depth (Feet)	1-2
Project Location	James City County, Virginia	Sample Location	CBR - 3
Project No.	1-81301.001	Sampled By	JN/TE
Sample No.	3	Remarks	

Laboratory Classification (ASTM & AASHTO Methods)

Sieve Size	Passing (%)	Proctor Result	Atterberg Limits	Sample Classification & Description
3/8"	100.0	Dry Density (pcf) 121.4	Liquid Limit 19.3	Light brown sandy silt (ML)
No. 4	100.0			
No. 10	99.4		Plastic Limit NP	
No. 20	96.9			
No. 40	84.0	Moisture (%) 10.5	Plasticity Index NP	
No. 60	67.8			
No. 100	57.9			
No. 200	52.3			

CBR Test Result

Laboratory Result	Unsoaked CBR	Soaked CBR	Remarks
Moisture (%)	99.0	99.0	
Dry Density (%)	102.8	100.2	
Swell (%)	---	0.00	
Moisture After Soaking (%)	---	10.4	
CBR Value	3.3	10.3	
Comments			
Recommendations	We recommend utilizing CBR value of 3.3 for pavement design.Stabilization is expected to be required in the pavement areas where this bulk sample was obtained.		

MOISTURE-DENSITY RELATIONS REPORT

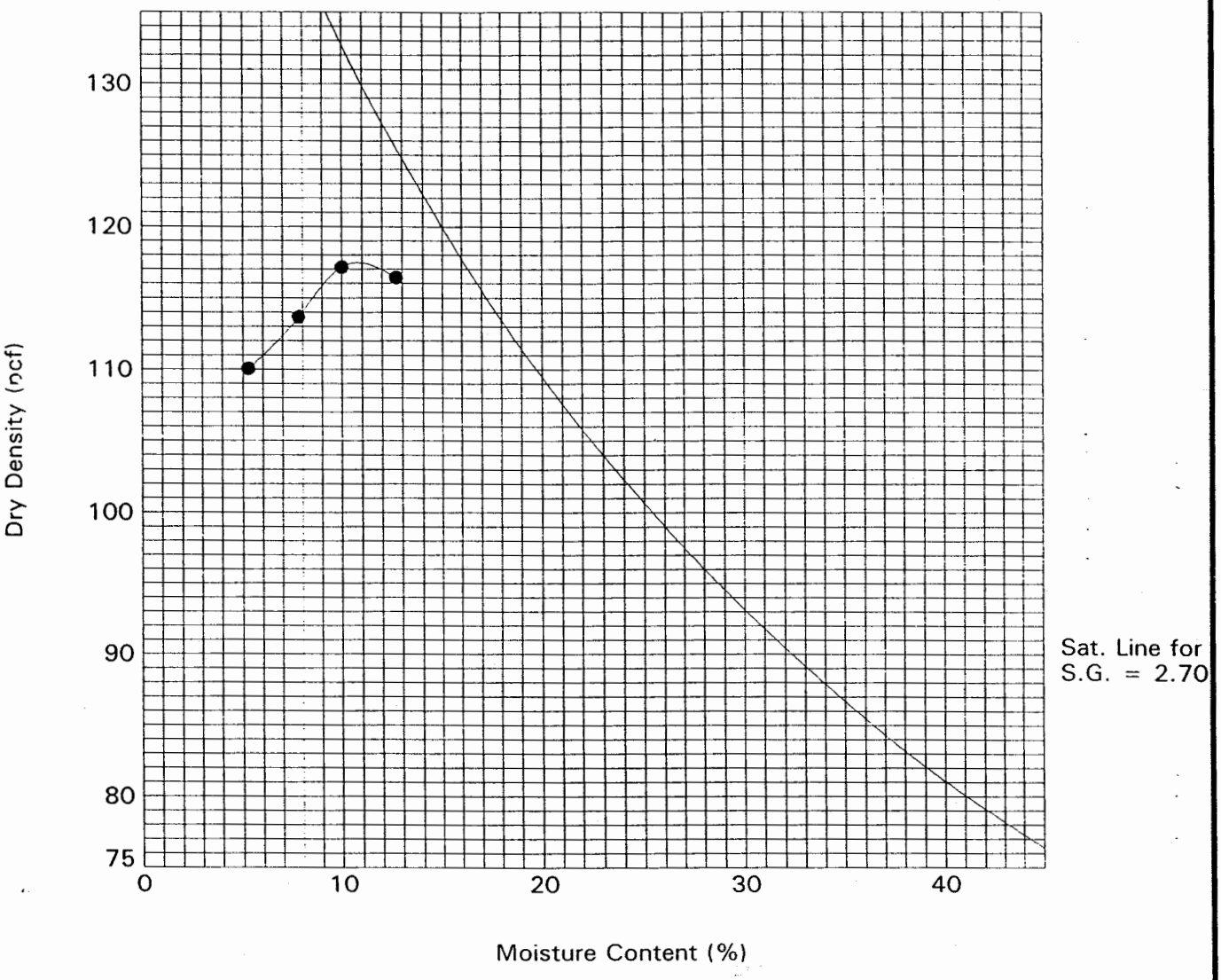

Boring/ Depth	Classification		Nat'l Moist.	S.G.	LL	PI	% > No. 4	% < No. 200
	USCS	AASHTO						
1 1.0	SM	A-4	5		17	17	0	43

Test Results	Material Description
Optimum Moisture Content = 10.0 Maximum Dry Density = 117.2	Light Brown Silty Sand
Project No.: 1-81301 Project Name: Fire Station Location: James City County, Virginia Date: 08/20/1998	Remarks: CBR Value: Unsoaked = 33.7, Soaked = 21.7

FOUNDATION ENGINEERING SCIENCE, INC.

Figure 1

PROCTOR 81301 8/27/98

MOISTURE-DENSITY RELATIONS REPORT

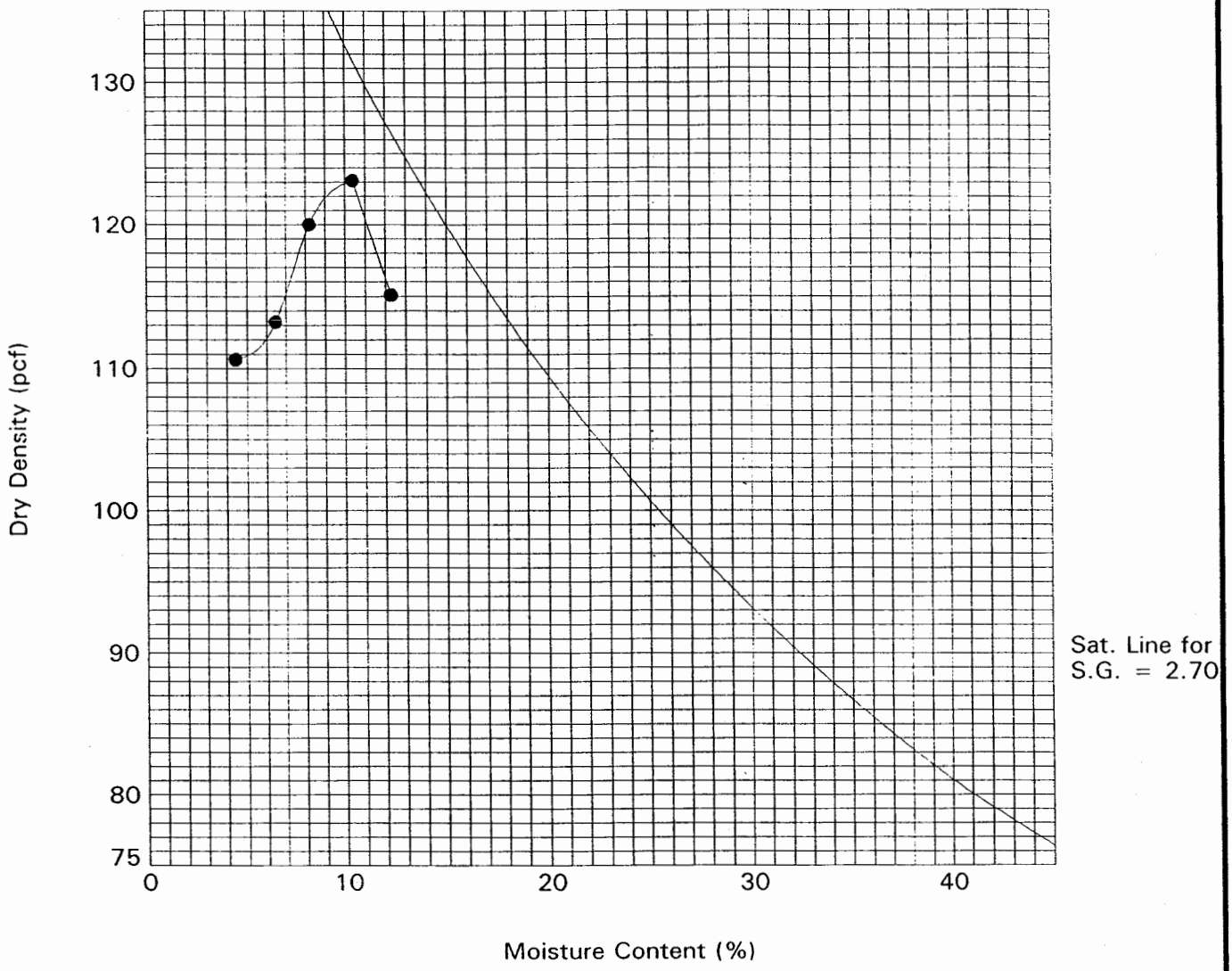

Boring/ Depth	Classification		Nat'l Moist.	S.G.	LL	PI	% > No. 4	% < No. 200
	USCS	AASHTO						
2 1.0	ML	A-4	5		17	17	0	57

Test Results	Material Description
Optimum Moisture Content = 10.4 Maximum Dry Density = 123.1	Light Brown sandy Silt with trace clay
Project No.: 1-81301 Project Name: Fire Station Location: James City County, Virginia Date: 08/20/1998	Remarks: CBR Value: Unsoaked = 4.3, Soaked = 8.3

PROCTOR 81301 8/27/98

FOUNDATION ENGINEERING SCIENCE, INC.

Figure 2

MOISTURE-DENSITY RELATIONS REPORT

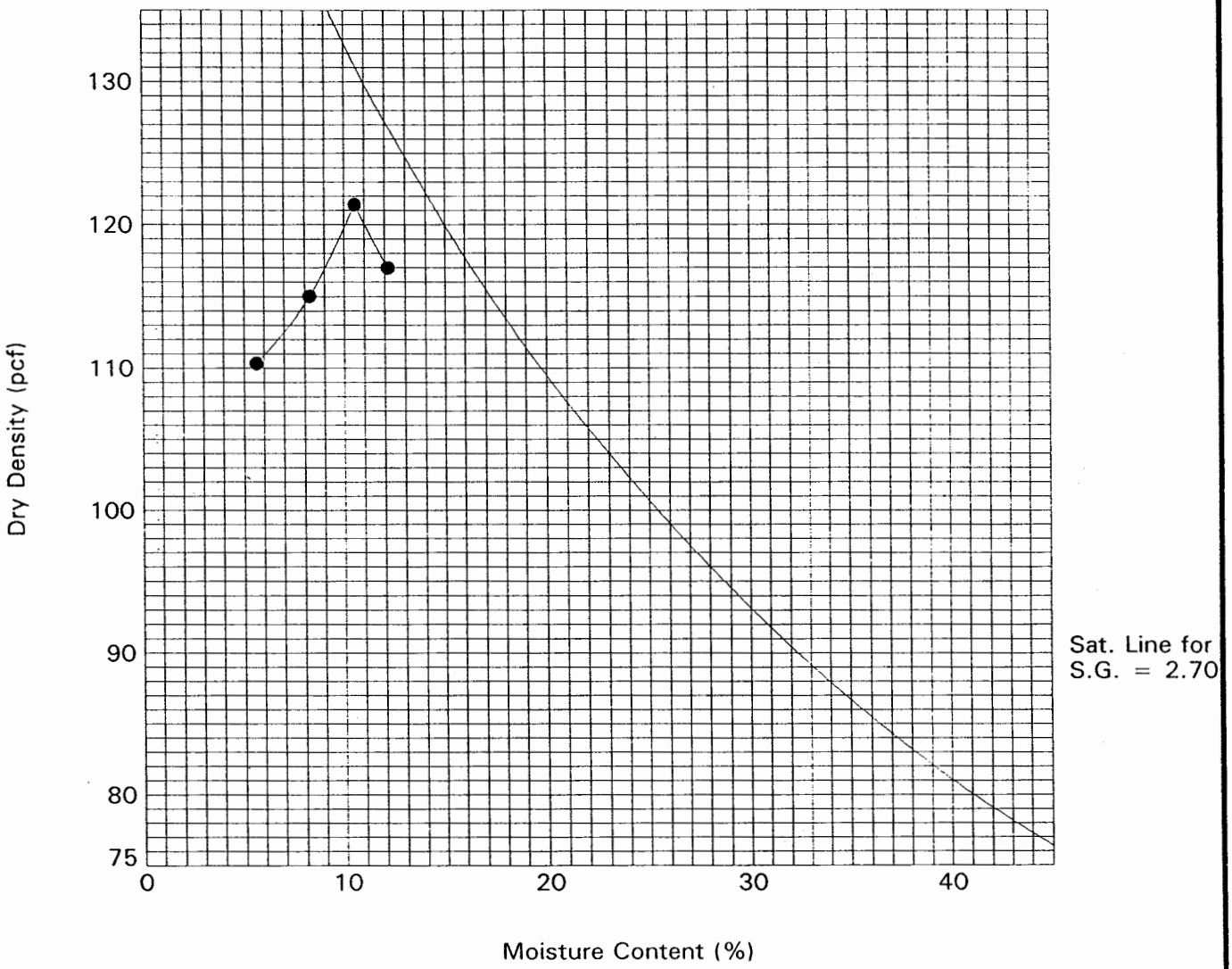

Boring/ Depth	Classification		Nat'l Moist.	S.G.	LL	PI	% > No. 4	% < No. 200
	USCS	AASHTO						
3 1.0	ML	A-4	6		19	19	0	52

Test Results	Material Description
Optimum Moisture Content = 10.5 Maximum Dry Density = 121.4	Light Brown sandy Silt with trace clay
Project No.: 1-81301 Project Name: Fire Station Location: James City County, Virginia Date: 08/20/1998	Remarks: CBR Value: Unsoaked = 3.3, Soaked = 10.0

PROCTOR 81301 8/27/98

FOUNDATION ENGINEERING SCIENCE, INC.

Figure 3

THE TAF GROUP
ARCHITECTURE
ENGINEERING
CONSTRUCTION

NOV 1999
RECEIVED
PLANNING DEPARTMENT

November 9, 1999

Department of Planning
P.O. Box 8784
101E Mounts Bay Road
Williamsburg, VA 23187-8784

Re: James City County Fire Station No. 5 – Site Plan Resubmittal
TAF Project No. 980440
Plan No. SP-91-99

To whom it may concern:

Attached you will find our resubmittal for Site Plan review for the above-referenced project. We have included twelve (12) sets of revised plans for final approval.

The following is a summary of responses to the comments made by Daryl Cook of James City County Environmental Division, dated August 23, 1999, and Danny Poe of the Wastewater Division, dated August 18, 1999. These comments were forwarded to our office by Bernard M. Farmer, Jr., P.E., Capital Program Administrator on September 29, 1999. It is our understanding from phone conversations with Mr. Farmer that these were the extent of the review comments made for this submittal, and that no other comments will be forthcoming.

ENVIRONMENTAL DIVISION – Daryl Cook

1. The owner or developer will provide all required permits, agreements, and sureties.
2. The BMP maintenance/inspection agreement will be executed by the owner upon completion of construction.
3. As-built information will be furnished upon completion of construction. A note has been added to the plan requiring certification by a professional engineer for the dam for the BMP.
4. There will be no off-site land disturbing activity, with the exception of the paved access road in the easement off of Proposed Alternate Route No. 5. Appropriate erosion control measures have been incorporated into the access road construction.
5. A diversion dike has been incorporated into the plans for the proposed access road.
6. The stone beds around the building are not intended as a BMP structure. They are intended to dissipate splashing from roof runoff, as there are no roof leaders on the building.
7. The BMP is designed to operate as a 6-point BMP based on information provided to our office by you.

Virginia Beach
1081 19th St., Suite 200, Virginia Beach, Virginia 23451 (757) 422-9933 FAX (757) 422-3585

POND + CHANNEL COMPS OK
NO STORM INLET
OR H.G.L COMPS

8. Hydraulic calculations were provided with the original submittal. We will forward another copy of the calculations with this submittal. We have included a drainage area map with this submittal.
9. The amount of stone has been specified for the outfall in accordance with Spec. 3.19 of the third edition of the Virginia Erosion Control Handbook.
10. The riprap has been changed to an EC-3 liner for erosion control. Appropriate calculations have been included.
11. The site erosion control during construction is provided by the proposed silt fence. The silt fence has been designed in accordance with the latest handbook criteria.
12. A. The principle spillway has been revised to convey the 10-year storm without flow through the emergency spillway.
    B. Routing calculations have been provided for the 10-year and 100-year storms.
    C. The principle spillway has been redesigned to incorporate a vertical riser structure. NO
    D. Calculations have been provided to demonstrate control of the 1-year storm for 24 hours.
    E. A drainage area map has been provided.
    F. We have included theory and definitions for the software used for the routing calculations. If you require additional information, you can contact Tom LeBeau of our office at (757) 422-9933. Tom will be happy to answer any questions you may have.
    G. Detailed input hydrograph information has been provided with this submittal.
    H. The emergency spillway has been revised as requested. The spillway location has been moved to a cut section. The spillway length has been revised to two (2) feet.
13. The sequence of construction has been revised as requested.

WASTEWATER DIVISION – Danny W. Poe, P.E.

1. A 15' JCSA utility easement has been shown on the water main from the right-of-way to the detector check.
2. The current location of the detector check is at the request of the Fire Department. They would like to be able to fill their pumper truck and wash the Fire Department vehicles without setting off the detector check.
3. A blow-off assembly has been added to the end of the 8" main.
4. A profile of the water main has been provided from the right-of-way to the detector check.
5. Restrained joint lengths have been provided as requested.
6. Appropriate standard JCSA details have been included in the plans.
7. A gate valve has been shown on the end of the 1-1/4" force main.
8. Fixture values are shown on the cover sheet. We have included a nomograph from AWWA for sizing domestic service lines based on fixture values. Standard practice dictates the meter to be one size smaller than the service line.
9. The current configuratiomn for the water and sewer connection are at the direction of Bernard M. Farmer, Jr., P.E., Capital Program Administrator. The grinder pump is referred to as "future" as it is currently not part of this plan. We have received no information for the force

main that the fire station pump station would connect to. It is not feasible to design a grinder pump station unless you know what head condition the station must pump against.

10. JCSA Water and Sewer Data sheets have been provided as requested.

We trust that these revisions will meet all requirements for final plan approval. If you need any additional information or have any questions, please do not hesitate to call.

Sincerely,

SG—

Scott Graver, P.E., L.S.
Project Manager

/ljt

Enclosures

THE TAF GROUP
ARCHITECTURE
ENGINEERING
CONSTRUCTION

Letter of Transmittal

1081 19th Street, Suite 200, Virginia Beach, VA 23451 (757) 422-9933 FAX (757) 422-3882
Engineering Department

TO: Daryl Cook

DATE: 03-Dec-99

COMPANY: James City County

PROJECT #: 980440

ADDRESS: P.O. Box 8784
101E Mounts Bay Road
Williamsburg, Va 23187-8784

PROJECT/SUBJECT: Fire Station No. 5

PAGE 1 OF 10 FAX#: 259-4032

ITEM #	DATED	# OF COPIES	DESCRIPTION
1	11/9/99	1	Copy of Resubmittal Transmittal
2	10/27/99	1	Hydraulic Calculations

STORM, INLET & HGL COMPS OK. SOME SURCHARGE BUT NO MAJOR IMPACT / SPREAD ON ACCESS DRIVES TO FIREHOUSE FOR 10-YEAR DESIGN. PONDING DEPTHS CONCENTRATE TO JUST AROUND INLETS.
SAT 12-03-99

TRANSMITTED AS CHECKED BELOW:

- [X] For approval
- [ ] No exceptions taken
- [ ] For record
- [ ] For pricing
- [ ] Make corrections noted
- [ ] For information
- [X] For review & comment
- [ ] Amend & resubmit
- [ ] To coordinate
- [ ] As requested
- [ ] Rejected - see remarks
- [ ] For bids due:

This transmittal was (check as required) [ ] faxed [x] ailed [ ] hand delivered

COMMENTS:

FROM: Scott Graver

COPY TO: File

TAF FORMS\ENGINEERING\TRANSMITTAL-ENG.DOC 10-14-98

THE TAF GROUP
ARCHITECTURE
ENGINEERING
CONSTRUCTION

Letter of Transmittal

1081 19th Street, Suite 200, Virginia Beach, VA 23451 (757) 422-9933 FAX (757) 422-3882
Engineering Department

TO: Planning Department

DATE: 09-Nov-99

COMPANY: James City County

PROJECT #: 980440

ADDRESS: P.O. Box 8784
101E Mounts Bay Road
Williamsburg, Va 23187-8784

PROJECT/SUBJECT: Fire Station No. 5

PAGE 1 OF FAX#:

ITEM #	DATED	# OF COPIES	DESCRIPTION
1	7/16/99	12	Site Development Plans
2	11/9/99	1	Resubmittal Letter
3	N/A	2	Stormwater Management Narative with Routing Calculations
4	N/A	2	Drawdown Calculations
5	N/A	2	VESCH Ditch Lining calculations
6	10/27/99	2	Hydraulic Calculations
7	11/9/99	2	Water and Sewer Data Sheets
8	6/30/99	2	Drainage Area Map

TRANSMITTED AS CHECKED BELOW:

- [x] For approval
- [ ] No exceptions taken
- [ ] For record
- [ ] For pricing
- [ ] Make corrections noted
- [ ] For information
- [x] For review & comment
- [ ] Amend & resubmit
- [ ] To coordinate
- [ ] As requested
- [ ] Rejected - see remarks
- [ ] For bids due:

This transmittal was (check as required) [ ] faxed [x] ailed [ ] hand delivered

COMMENTS:

FROM: Scott Graver

COPY TO: File

TAF FORMS\ENGINEERING\TRANSMITTAL-ENG.DOC 10-14-98

Scott Thomas

From: Scott Thomas
Sent: Wednesday, August 22, 2001 3:10 PM
To: Rose King
Cc: Bernard M. Farmer; Beth Davis
Subject: JCC Firehouse # 5 Pond

Rose

As discussed with you and briefly with Bernie today:

Based on my review of Sheets C-3 and C-4 of the preliminary "as-built" set for JCC Fire Station # 5 (County Plan SP-91-99), as present at Rose King's office, at a minimum the following would need addressed to meet our current standards for Record Drawing and Construction Certification for stormwater management facilities:

1) Standard Forms. At a minimum and to the greatest extent possible, complete Sections 1, 2, 3, 4 and 5 (pages 1 through 3) of the forms in our Record Drawing and Construction Certification, Standard Forms & Instruction packet. I previously forwarded our RD/CC packet to Bernie. If another copy is needed let me know.

2) Construction Certification. Construction certification is required, mainly for the dam embankment and the riser/barrel outlet structure. Can be in either letter format or by use of the standard certification statements (form) in the County Record Drawing/Construction certification packet.

3) Record Drawing. Per previous project comments and notes on the drawings, a record drawing (as-built) is required for the stormwater management facilty. Presently, all the data on Sheet C-3 and C-4 appears to reflect information from the approved design plan. Normally, we require the design plan information to be crossed out (but not erased) and as-built data to be shown next to the design information in color, bold or boxed format.

4) Record Drawing. Need top of dam spot elevations (no less than 50' interval) to confirm freeboard is present from design high water; bottom of pond spot elevations to confirm pond depth and positive drainage within the bottom of the basin; confirmation that design sideslopes are not steeper than that proposed; riser and barrel information (elevations, sizes, material type, etc.); riser grate or rack types; riser orifice information (invert elevation and size); outlet protection information (dimensions and stone type) and storm drain pipe data for the two primary storm drain inflows into the pond. At a minimum storm drain pipe data (pipe length, size; type; invert elevations) should extend back to the first access structures, specifically inlets S2 & S6.

5) Annotate Sheets C-3 (grading plan view) and Sheets C-4 (riser structure detail) as required with as-built field information as outlined above.

This should be sufficient to meet our current requirements. Call me at x6639 if you have any questions.

Scott J. Thomas, P.E.
James City County
Environmental Division

TRANSMITTAL

NOV 1999
RECEIVED
ENVIRONMENTAL DIVISION

DATE: NOVEMBER 10, 1999

12-02-99

TO: ENVIRONMENTAL
JCSA

FROM: CHRISTOPHER JOHNSON, PLANNER

SUBJECT: SP-91-99. JAMES CITY COUNTY FIRE STATION #5

ITEMS ATTACHED: REVISED SITE PLAN

INSTRUCTIONS: PLEASE REVIEW AND COMMENT OR APPROVE AND SIGN

RETURN BY: NOVEMBER 17, 1999

AGENCY COMMENTS:

Date Record Created:

Created By:

WS_BMPNO: JR057

Print Record

PRINTED ON
Thursday, March 11, 2010
11:35:29 AM

WATERSHED	JR
BMP ID NO	057
PLAN NO	SP-91-99
TAX PARCEL	(36-3)(1-23)
PIN NO	3630100023
CONSTRUCTION DATE	1/1/2003
PROJECT NAME	James City County Fire Sta. No. 5
FACILITY LOCATION	3201 Monticello Avenue
CITY-STATE	Williamsburg, Va. 23188
CURRENT OWNER	James City County
OWNER ADDRESS	P.O. Box 8784
OWNER ADDRESS 2	
CITY-STATE-ZIP CODE	Williamsburg, Va. 23187
OWNER PHONE	
MAINT AGREEMENT	No
EMERG ACTION PLAN	No

Get Last BMP No

Return to Menu

MAINTENANCE PLAN	No	CTRL STRUC DESC	DI-1 Inlet
SITE AREA acre	4.01	CTRL STRUC SIZE inches	
LAND USE	Public Fire Station	OTLT BARRL DESC	RCP Barrel
old BMP TYP	Dry Pond	OTLT BARRL SIZE inch	18
JCC BMP CODE	F2 Dry ED with forebay		
POINT VALUE	6	EMERG SPILLWAY	Yes
		DESIGN HW ELEV	56.94
		PERM POOL ELEV	53.5
SVC DRAIN AREA acres	2.08	2-YR OUTFLOW cfs	0.00
		10-YR OUTFLOW cfs	2.99
		REC DRAWING	No
SERVICE AREA DESCRI	Firehouse & Offsite Area		
IMPERV AREA acres	0.00	CONSTR CERTIF	No
RECV STREAM	UT of Powhatan Creek		
EXT DET-WQ-CTRL	Yes	LAST INSP DATE	Inspected by:
WTR QUAL VOL acre-ft		INTERNAL RATING	
CHAN PROT CTRL	Yes	MISC/COMMENTS	
CHAN PROT VOL acre-ft	0.07	Shallow marsh BMP. Doesn't drain well, level outlet pipe.	
SW/FLOOD CONTROL	Yes		
GEOTECH REPORT	Yes		

Additional Comments:

REVISED [illegible]

SAVED AS SP-091-99.1

ENVIRONMENTAL DIVISION REVIEW COMMENTS
JAMES CITY COUNTY FIRE STATION #5
PLAN NO. SP-91-99
August 23, 1999 MCE/DEC

Copy

1. A Land Disturbing Permit and Siltation Agreement, with surety, are required for this project.

2. An Inspection/Maintenance Agreement shall be executed with the county for the BMP facility for this project.

3. As-built drawings must be provided for the detention basin on completion. Also, a note shall be provided on the plan stating that upon completion, the construction of the dam will be certified by a professional engineer who has inspected the structure during construction.

4. Identify any off-site land disturbing areas required with proper erosion control measures. [illegible]

5. Provide a diversion dike from the end of the proposed road, over to the sediment basin, to carry runoff to the basin until a point when the storm system is operational.

~~6.~~ It is unclear what the infiltration beds are for as they are not considered in the BMP calculation. Either provide an outlet for the infiltration beds leading into the BMP or provide a soil report showing that the soil in the location of the infiltration beds will infiltrate at a minimum rate of 0.50 feet per hour to a depth of 5 feet below the bottom of the trench.

ok as is not for water quality

~~7.~~ The BMP is not designed to operate as a 6-point BMP so the BMP calculation worksheet needs to be revised to eliminate the onsite BMP credit. The only items that will receive BMP credits are the offsite BMP and the natural open space onsite.

ok as is

8. Provide calculations to support the design of all drainage conveyances including pipes, culverts, inlets, ditches, etc. Provide hydraulic grade line calculations based on the 10-year storm. Include a drainage area map for each structure.

NONE

9. Specify the amount of stone to be used as outfall protection in accordance with Spec 3.19 of the third edition of the Virginia Erosion Control Handbook (VESCH).

10. It is unclear what the purpose of the riprap just to the west of the BMP is. If it is to serve as protection for the ditch where it makes the turn, it would appear that an EC-3 liner would serve the same function at a much lower cost and also be much more aesthetic. Submit calculations to support the design and type of liner

needed for the ditch.

11. The detention basin must be examined for performance as a sediment trap during the construction of the project and be designed according to the new handbook criteria. THIS DOES NOT SHOW ON PLAN ANYWHERE

12. The following comments refer to the BMP design:

OK A. The principle spillway needs to be designed to convey the 10-year storm without flow through the emergency spillway. 56.71 < 56.8 O.K

OK B. Calculations need to be provided that show routing of the 10- and 100-year storms.

C. The outlet structure of the BMP needs to be redesigned. As stated above, the principle needs to convey the 10-year storm as well as the release of the 1-year storm over ~~24~~ OK hours. OK The design needs to include either a sloped or vertical riser structure for use as trash protection. NOT ADDRESSED.

D. Provide calculations that demonstrate the control of the 1-year storm for 24 hours.

E. Provide a drainage area map for the BMP.

F. The computer model is unfamiliar to me and difficult to follow. Provide a schematic that shows the configuration of the model input data.

G. More documentation is needed on the input data to the model such as the RCN and time of concentration.

H. It appears that the calculations only require a 2 foot wide emergency spillway while the plan shows a 35 foot wide spillway provided. Resolve the discrepancy. If a 35 foot wide spillway is necessary, it needs to be located in a cut section on natural ground or else be lined with concrete. The expense of a permanent liner of either riprap or concrete can be eliminated by relocating the spillway to either side of the fill sections.

2' < MIN WIDTH TYP BUT OK.

13. Provide a more detailed sequence of construction where the sediment trap and diversion dikes are constructed as first step erosion control measures, before the remainder of the site is cleared.

Based on my review of Sheets C-3 and C-4 of the preliminary "as-built" set for JCC Firehouse # 5 (SP-91-99), as present at Rose King's office, at a minimum the following would need addressed to meet our current standards for Record Drawing and Construction Certification for stormwater management facilities:

- Standard Forms. At a minimum and to the greatest extent possible, complete Sections 1, 2, 3, 4 and 5 of the forms in our Record Drawing and Construction Certification, Standard Forms & Instruction packet. I previously forwarded our RD/CC packet to Bernie. If another copy is needed let me know.

- Construction Certification. Construction certification is required, mainly for the dam embankment and the riser/barrel outlet structure. Can be in either letter format or per the standard certification statements (forms) in the County Record Drawing/Construction certification packet.

- Record Drawing. Per previous project comments and notes on the drawings, a record drawing (as-built) is required for the stormwater management facilty. Presently, all the data on Sheet C-3 and C-4 appears to reflect information from the approved design plan. Normally, we require the design plan information to be crossed out (but not erased) and as-built data to be shown next to the design information in color, bold or boxed format.

- Record Drawing. Need top of dam spot elevations (no less than 50' interval) to confirm freeboard is present from design high water; bottom of pond spot elevations to confirm pond depth and positive drainage within the bottom of the basin; confirmation that design sideslopes are not steeper than that proposed; riser and barrel information (elevations, sizes, material type, etc.); riser grate or rack types; riser orifice information (elevation and size); outlet protection information (size; stone type) and inflow storm drain pipe data back to the first access structure (pipe length, size; type; invert elevations).

- Annotate Sheet C-3 (plan view) and Sheets C-4 (riser detail) as required with as-built field information as outlined above.