CERTIFICATE OF AUTHENTICITY

THIS IS TO CERTIFY THAT THE FOLLOWING ELECTRONIC RECORDS ARE TRUE AND ACCURATE REPRODUCTIONS OF THE ORIGINAL RECORDS OF JAMES CITY COUNTY GENERAL SERVICES DEPARTMENT- STORMWATER DIVISION; WERE SCANNED IN THE REGULAR COURSE OF BUSINESS PURSUANT TO GUIDELINES ESTABLISHED BY THE LIBRARY OF VIRGINIA AND ARCHIVES; AND HAVE BEEN VERIFIED IN THE CUSTODY OF THE INDIVIDUAL LISTED BELOW.

BMP NUMBER: **JR069**

DATE VERIFIED: **June 19, 2012**

QUALITY ASSURANCE TECHNICIAN: **Leah Hardenbergh**

Leah Hardenbergh

LOCATION: WILLIAMSBURG, VIRGINIA

Stormwater Division

MEMORANDUM

DATE: March 11, 2010

TO: Michael J. Gillis, Virginia Correctional Enterprises Document Management Services

FROM: Tina Cantwell, Stormwater

PO: 270712

RE: Files Approved for Scanning

General File ID or BMP ID: JR069

PIN: 5420100001

Subdivision, Tract, Business or Owner Name (if known): Association for the Preservation of Virginia Antiquities

Property Description: Collection's Building on Jamestown Island

Site Address: 1365 Colonial Parkway

(For internal use only) **Box** 11 **Drawer:** 7

Agreements: (in file as of scan date) **N** **Book or Doc#:** **Page:**

Comments

JR-069

Contents for Stormwater Management Facilities As-built Files

Each file is to contain:

1. As-built plan
2. Completed construction certification
3. Construction Plan
4. Design Calculations
5. Watershed Map
6. Maintenance Agreement
7. Correspondence with owners
8. Inspection Records
9. Enforcement Actions

James City County Environmental Division
Stormwater Management/BMP Record Drawing & Construction Certification Review
Tracking Form

Colonial National Historic Park

Project Name: Collections Building - Colonial National Park
County Plan No.: SP-065-03: SP-43-06 Amended
Stormwater Management Facility: Bio-Retention Pond
BMP Phase #: ☐ I ☐ II ☒ III

- ☐ Information Package Received. Date/By: 6/25/05
- ☐ Completeness Check:
  - ☑ Record Drawing — Date/By: AES Thomas Sublett 7/11/05
  - ☑ Construction Certification — Date/By: 9/7/05 VHB Tim Hogan
  - ☑ RD/CC Standard Forms — (Required for all BMPs after Feb 1st 2001Only)
  - ☐ Insp/Maint Agreement # / Date: _____
  - ☐ BMP Maintenance Plan Location: _____
  - ☐ Other: _____
- ☑ Standard E&SC Note on Approved Plan Requiring RD/CC or County comment in plan review
  - ☐ Yes ☐ No — Location: _____
- ☑ Assign **County BMP ID Code #**: Code: ~~JR-06~~ JR069
- ☑ Preliminary Input/Log into Division's "As-Built Tracking Log"
- ☐ Add Location to GIS Map. Obtain basic site information (GPIN, Owner, Address, etc.)
- ☑ Preliminary Log into Access Database (BMP ID #, Plan No., GPIN, Project Name, etc.)
- ☑ Active Project File Review (correspondence, H&H, design computations, etc.).
- ☑ Initial As-Built File setup (File label, folder, copy plan/details/design information, etc.).
- ☑ Inspector Check of RD/CC (forward to Inspector using transmittal for cursory review).
- ☑ Pre-Inspection Drawing Review of Approved Plan (Quick look prior to Field Inspection).
- ☑ Final Inspection (FI) Performed — Date: 1/4/08
- ☑ Record Drawing (RD) Review — Date: 1/4/08
- ☑ Construction Certification (CC) Review — Date: 1/4/08
- ☑ Actions:
  - ☑ No comments.
  - ☐ Comments. Letter Forwarded. Date: _____
  - ☐ Record Drawing (RD)
  - ☐ Construction Certification (CC)
  - ☐ Construction-Related (CR)
  - ☐ Site Issues (SI)
  - ☐ Other : _____
- ☑ Second Submission: NA
- ☑ Reinspection (if necessary): NA
- ☑ Acceptable for SWM Purposes (RD/CC/CR/Other). Ok to proceed with bond release. NA
- ☑ Complete "Surety Request Form". NA
- ☑ Check/Clean active file of any remaining material and finish "As-Built" file.
- ☑ Add to County BMP Inventory/Inspection schedule (Phase I, II or III).
- ☐ Copy Final Inspection Report into County BMP Inspection Program file.
- ☐ Obtain Digital Photographs of BMP and save into County BMP Inventory.
- ☐ Request mylar/reproducible from As-Built plan preparer.
- ☐ Complete "As-built Tracking Log".
- ☑ Last check of BMP Access Database (County BMP Inventory).
- ☐ ~~Add BMP to JCC Hydrology & Hydraulic database (optional).~~
- ☐ ~~Add BMP to Municipal BMP list (if a County-owned facility)~~
- ☐ Add BMP to PRIDE BMP ratings database.

Final Sign-Off

Inspector: [signature] Date: 1/10/08

Chief Engineer: _____ Date: _____

*** See separate checklist, if needed.

James City County, Virginia
Environmental Division

Stormwater Management / BMP Facilities
Record Drawing and Construction Certification Forms

(Note: In accordance with the requirements of the Chesapeake Bay Preservation Ordinance, Chapter 23, Section 23-10(4), BMP's shall be designed and constructed in accordance with the manual entitled James City County Guidelines for Design and Construction of Stormwater Management BMP's. Erosion and sediment control policy and approved plans generally require that at the completion of the project and prior to release of surety, an "as-built" plan prepared by a registered Professional Engineer or Certified Land Surveyor must be provided for the drainage system for the project, including any Best Management Practice (BMP) facilities. In addition, for BMP facilities involving the construction of an impounding structure or dam embankment, certification is required by a Professional Engineer who has inspected the structure during its construction. Currently there are over 20 water quality type BMP's accepted by the County.)

Section 1 - Site Information:

Project Name: COLLECTIONS BUILDING - COLONIAL NATIONAL HISTORICAL PARK
Structure/BMP Name: BIORETENTION POND
Project Location: JAMESTOWN ISLAND - 1365 COLONIAL PARKWAY
BMP Location: NORTH SIDE OF YEARDLEY HOUSE
County Plan No.: SP - 065 - 0

Project Type: ☐ Residential ☐ Business ☐ Commercial ☐ Office ☐ Institutional ☐ Industrial ☒ Public ☐ Roadway ☐ Other _____

Tax Map/Parcel No.: 5420100001
BMP ID Code (if known): _____
Zoning District:: RB - RURAL RESIDENTIAL
Land Use: HISTORICAL PRESERVATION
Site Area (sf or acres): 22.0 ACRES

Brief Description of Stormwater Management/BMP Facility: BIORETION POND IS SITUATED INSIDE THE GRAVEL LOOP ROAD ENTRANCE ON THE NORTH SIDE OF COLLECTIONS BUILDING & YEARDLEY HOUSE. FLOW TO THE POND IS FROM (3) CULVERTS & SHEET FLOW. OUTFALL IS TO WETLANDS AREA NORTH OF POND.

Nearest Visible Landmark to SWM/BMP Facility: COLLECTIONS BUILDING / YEARDLEY HOUSE

Nearest Vertical Ground Control (if known):
☐ JCC Geodetic Ground Control ☐ USGS ☐ Temporary ☐ Arbitrary ☒ Other
Station Number or Name: VHB TRAV - 113
Datum or Reference Elevation: U.S. CORP OF ENGINEERS
Control Description: DISK ELEV = 7.24
Control Location from Subject Facility: 280 L.F. WEST OF POND ON SEA WALL

Section 2 - Stormwater Management / BMP Facility Construction Information:

PreConstruction Meeting Held for Construction of SWM/BMP Facility: ☐ Yes ☐ No ☑ Unknown
Approx. Construction Start Date for SWM/BMP Facility: _____
Facility Monitored by County Representative during Construction: ☐ Yes ☐ No ☑ Unknown
Name of Site Work Contractor Who Constructed Facility: _____
Name of Professional Firm Who Routinely Monitored Construction: _____
Date of Completion for SWM/BMP Facility: _____
Date of Record Drawing/Construction Certification Submittal: _____

(Note: Record Drawing and Construction Certifications are required within thirty (30) days of the completion of Stormwater Management and/or BMP facility construction. Record Drawings and Construction Certifications must be reviewed and approved by the James City County Environmental Division prior to final inspection, acceptance and bond or surety release.)

Section 3 - Owner / Designer / Contractor Information:

Owner/Developer: *(Note: Site Owner or Applicant responsible for development of the project.)*

Name: ASSOCIATION FOR THE PRESERVATION OF VIRGINIA ANTIQUITIES
Mailing Address: 1365 COLONIAL PARKWAY
WILLIAMSBURG, VA 23185-1900
Business Phone: _____ Fax: _____
Contact Person: _____ Title: _____

Design Professional: *(Note: Professional Engineer or Certified Land Surveyor responsible for the design and preparation of plans and specifications for the Stormwater Management / BMP facility.)*

Firm Name: Vanasse Hangen Brustlin
Mailing Address: 351 McLaws Circle
Suite 3 Williamsburg, VA 23185
Business Phone: 757 220-0500
Fax: 757 220-8544
Responsible Plan Preparer: Tim Hogan
Title: Project Engineer
Plan Name: Collections Building
Firm's Project No. 31005.21
Plan Date: 7-8-03
Sheet No.'s Applicable to SWM/BMP Facility: C8 / C10 / C14 / ____ / ____

BMP Contractor: *(Note: Site Work Contractor directly responsible for construction of the Stormwater Management / BMP facility.)*

Name: J+J CONTRACTORS, INC.
Mailing Address: 35 MARKET STREET, STE 401
LOWELL, MA 01852
Business Phone: 978-452-9898 site: 757-564-9183
Fax: 978-452-3796 site: 757-564-9184
Contact Person: ~~MICHAEL LIZZA~~ BIMAL PATEL
Site Foreman/Supervisor: MICHAEL LIZZA / ANDY ZAJAC
Specialty Subcontractors & Purpose (for BMP Construction Only):
Delightful Gardens - mulch, grade, seed/[redacted]
mulch w/ shredded hardwood mulch.

Section 4 – Professional Certifications:

Certifying Professionals: *(Note: A Registered Professional Engineer of Certified Land Surveyor is responsible for preparation of a Record Drawing, sometimes referred to as an As-Built plan, for the drainage system for the project including any Stormwater Management/BMP Facilities. A Registered Professional Engineer is responsible for the inspection, monitoring and certification of Stormwater Management / BMP facilities during its construction.)*

Record Drawing and Construction Certifications for Stormwater Management / BMP Facilities

Record Drawing Certification

Firm Name: AES CONSULTING ENGINEERS
Mailing Address: 524B OLDE TOWNE RD
WILLIAMSBURG, VA 23188
Business Phone: 757-253-0040
Fax: 757-220-8994

Name: THOMAS C. SUBLETT
Title: LAND SURVEYOR

Signature: Thomas C. Sublett
Date: 7/11/05

I hereby certify to the best of my knowledge and belief that this record drawing represents the actual condition of the Stormwater Management / BMP facility. The facility appears to conform with the ~~provisions of the~~ approved design plan, ~~specifications and stormwater management plan,~~ except ~~as specifically noted.~~

Construction Certification

Firm Name: Vanasse Hangen Brustlin
Mailing Address: 351 McLaws Circle Suite 3
Williamsburg, VA 23185
Business Phone: 757-220-0500
Fax: 757-220-0544

Name: Timothy J. Hogan, PE
Title: Project Engineer.

Signature: Tim Hogan
Date: 9/7/05

I hereby certify to the best of my knowledge and belief that this Stormwater Management / BMP facility was monitored and constructed in accordance with the provisions of the approved design plan, specifications and stormwater management plan, except as specifically noted.

COMMONWEALTH OF VIRGINIA
THOMAS C. SUBLETT
No. 1886
7/11/05
LAND SURVEYOR

_____ (Seal)

~~Virginia Registered Professional Engineer Or Certified~~ Land Surveyor

Tim Hogan
9/7/05
_____ (Seal)

Virginia Registered Professional Engineer

STORMWATER MANAGEMENT / BMP FACILITIES
RECORD DRAWING CHECKLIST

(Key for Checklist is as follows: XX Acceptable N/A Not Applicable Inc Incomplete)

I. Methods and Presentation: *(Required for all Stormwater Management / BMP facilities.)*

✓ 1. All constructed facilities meet approved design plans, unless otherwise shown. Record information or deviations from approved design plan shown in clearly annotated format and/or boxed beside design values.

✓ 2. Elevations to the nearest 0.1' unless higher accuracy is needed to show positive drainage.

✓ 3. All plan sheets labeled with "RECORD DRAWING" in large text in lower right hand corner (Approved County Plan Number and BMP ID Code can be included if known).

✓ 4. All plans sheet revision blocks modified to indicate date and record drawing status.

✓ 5. All plan sheets have certification statements and certifying professional's signature and seal.

II. Minimum Standards: *(Required for all Stormwater Management / BMP facilities, as applicable.)*

✓ 1. All requirements of Section I (Methods and Presentation) apply to this section.

✓ 2. Plan Views: Show general location, arrangement and dimensions. Location and alignment shall generally match approved design plans.

NA 3. Profile or elevations along top or berm of the facility. At a minimum, elevations are required at each end, at intervals not to exceed 50 feet and where low spots may be present. Top of embankment or berm elevations must be no less than design elevation plus any settlement allowances.

NA 4. Top widths, berm widths and embankment side slopes.

XX 5. Show length, width and depth of facility or grading, contours or spot elevations as required to verify permanent pool and design storage volumes were met or were reasonably close to the approved design. Evaluation of as-built grading, contours, spot elevations, or cross-sections, may be necessary by the professional to ensure approved design configurations, depths and volumes were closely maintained. If grading or elevations are significantly different from the approved plan, the Environmental Division shall be contacted immediately to determine whether the variation is acceptable or whether further evidence will be required. Facilities which do not closely resemble approved plan grades, elevations or configurations may require regrading by the Contractor; check volumetric computations; and/or a check hydraulic routing to ensure approved design water surface elevations, discharges or freeboard were closely maintained.

NA 6. Cross-section of the embankment through the principal spillway or outlet barrel. Must extend at least 100 ft. downstream of the pipe outlet or to recorded site property line, whichever is closer. Proper correlation is required between principal spillway (control structure) crest, emergency spillway crest, orifice and weirs and the top of the dam or facility. All elevations and dimensions must reasonably match the design plan or be sequentially relative to each other and the facility must reflect the required design storage volume(s) and/or design depth.

NA 7. Profile or elevations along the entire centerline of the emergency spillway. Emergency spillway may be steeper, but no flatter or narrower than design.

NA 8. Elevation of the principal spillway crest or outlet crest of the structure.

NA 9. Primary control structure (riser) diameter or dimensions, height, type of material and base size. Indicate provisions for access that are present such as steps, ladders, etc.

✓ 10. Dimensions, locations and elevations of outlet orifices, weirs, slots and drains.

NA 11. Type and size of anti-vortex and trash rack device. Height, diameter, dimensions, bar spacings (if applicable) and elevations relative to the principal spillway crest. Indicate if lockable hatch is present or not.

NA 12. Type, location, size and number of anti-seep collars or documentation of other methods utilized for seepage control. **May need to obtain this information during construction.**

NA 13. Top of impervious core embankment, core trench limits and elevation of cut-off trench bottom. **May need to obtain this information during construction.**

XX 14. Elevation of the principal spillway barrel (outlet pipe) inlet and outlet invert.

XX 15. Outlet barrel diameter, length, slope, type and thickness class of material and type of flared end sections, headwall or endwall.

XX 16. Outfall protection dimension, type and depth of rock and if underlain filter fabric is present.

XX 17. BMP interior and periphery landscaping zones conform with arrangements and requirements of the approved design plan.

NA 18. Maintenance plan taken from approved design plan transposed onto record drawing set.

NA 19. Fencing location and type, if applicable to facility.

XX 20. BMP vicinity properly cleaned of stockpiles and construction debris.

XX 21. No visual signs of erosion or channel degradation immediately downstream of facility.

NA 22. Any other information formally requested by the Environmental Division specific to the constructed SWM/BMP facility.

STORMWATER MANAGEMENT / BMP FACILITIES
RECORD DRAWING CHECKLIST

(Key for Checklist is as follows: XX Acceptable N/A Not Applicable Inc Incomplete)

VI. Group D – Filtering Systems *Includes D-1 Bioretention Cells; D-2 Surface Sand Filters; D-3 Underground Sand Filters; D-4 Perimeter Sand Filters; D-5 Organic Filters; and D-6 Pocket Sand Filters)*

XX D1. All requirements of Section II, Minimum Standards, apply to Group D facilities.

XX D2. Sediment pretreatment devices provided.

XX D3. For D-1 BMPs (Bioretention Cells), pretreatment consisting of a grass filter strip below level spreader (deflector); a gravel diaphragm; and mulch and planting soil layers were provided.

XX D4. For D-1 BMPs (Bioretention Cells), plantings consist of native plant species; vegetation provided was based on zones of hydric tolerances; trees and understory of shrubs and herbaceous materials were provided; woody vegetation is absent from inflow locations; and trees are located around facility perimeter.

XX D5. Facility was not used for erosion and sediment control purposes and sediment was prevented from entering the facility to the greatest extent possible during construction.

XX D6. No visible signs of accumulated silt/sediment were present in the facility following construction or alternately, accumulated silt/sediment was properly removed.

XX D7. Filtering system is off-line from storm drainage conveyance system.

XX D8. Overflow outlet has adequate erosion protection.

NA D9. Deflector, diversion, flow splitter or regulator structure provided to divert the water quality volume to the filtering structure.

NA D10. Minimum four (4) inch perforated underdrain provided in a clean aggregate envelope layer beneath the facility.

XX D11. Minimum fifty (50) foot separation from any slope fifteen (15) percent or greater. Minimum one hundred (100) foot separation horizontally from any known water supply well. Minimum one hundred (100) foot separation upslope and twenty-five (25) foot separation downslope from any building.

XX D12. Stabilization and acceptable vegetative cover established over contributing drainage area prior to conveyance of stormwater to the facility.

XX D13. No visual signs of erosion or channel degradation immediately downstream of facility.

XX D14. Adequate, direct access provided to the pretreatment area and/or filter bed for future maintenance.

Alpha Corporation

21351 Ridgetop Circle, Suite 200, Dulles, VA 201646. (703)450-0800. Fax (703)450-0043.

Letter of Transmittal

To:

J&J CONTRACTORS
35 MARKET STREET, SUITE 401
LOWELL, MA 01852

(978) 452-9898

Date: 9/15/05	**Job No.** 1443N4500030905 COLO-404
Attention: [redacted]	
Reference: JAMESTOWN COLLECTIONS BUILDING	

We Are Sending You: X **Attached** ☐ **Under Separate Cover**
via **Hand Delivery** **the following items:**

☐ **Prints** ☐ **Plans** ☐ **Shop Drawings** ☐ **Samples** ☐ **Specification(s)**

☐ **Letter** ☐ **Change Order** ☐ _____

Copies	Date	No.	Description
1	9/7/05		Jamestown Collections Building BMP Certification

These Are Transmitted as Checked Below:

☐ **For Approval** ☐ **Approved As Submitted** ☐ **Resubmit ___ copie(s) for Approval**

X **For Your Use** ☐ **Approved As Noted** ☐ **Submit ___ copie(s) for Distribution**

☐ **As Requested** ☐ **Returned For Corrections** ☐ **Return ___ corrected prints**

☐ **For Review and Comment** ☐ _____

☐ **Prints Returned After Loan to Us** ☐ **For Bids Due On:** _____

Remarks:

Copy To: Ron Treants **Signed:**

C A R L T O N A B B O T T A N D P A R T N E R S , P . C .

ARCHITECTURE LANDSCAPE ARCHITECTURE PLANNING

LETTER OF TRANSMITTAL

Date: September 15, 2005

Re: Jamestown Collections Building

To: John Glass
Jamestown Collections Building

We are sending via: Hand delivery

The following items:

Description: Jamestown Collections Building BMP Construction Certification

These are transmitted:

	For Review and Approval	Approved as Submitted	Return Corrected Prints
X	For Your Use	Approved as Noted	Returned After Loan to us
	As Requested	Disapproved - Resubmit	

Remarks:

Signed: David M. Stemann, AIA

Copy: File

402 DUKE OF GLOUCESTER STREET P.O. BOX BU WILLIAMSBURG, VIRGINIA 23185 757-220-1095 757-229-8604 (FAX) studio@carltonabbott.com

I HEREBY CERTIFY TO THE BEST OF MY KNOWLEDGE AND BELIEF THAT THIS RECORD DRAWING REPRESENTS THE ACTUAL CONDITION OF THE STORMWATER MANAGEMENT/BMP. FACILITY.THE FACILITY APPEARS TO GENERALLY CONFORM WITH THE APPROVED DESIGN PLANS..

THOMAS C. SUBLETT, L.S. #1886

JULY 11, 2005
DATE SURVEYED

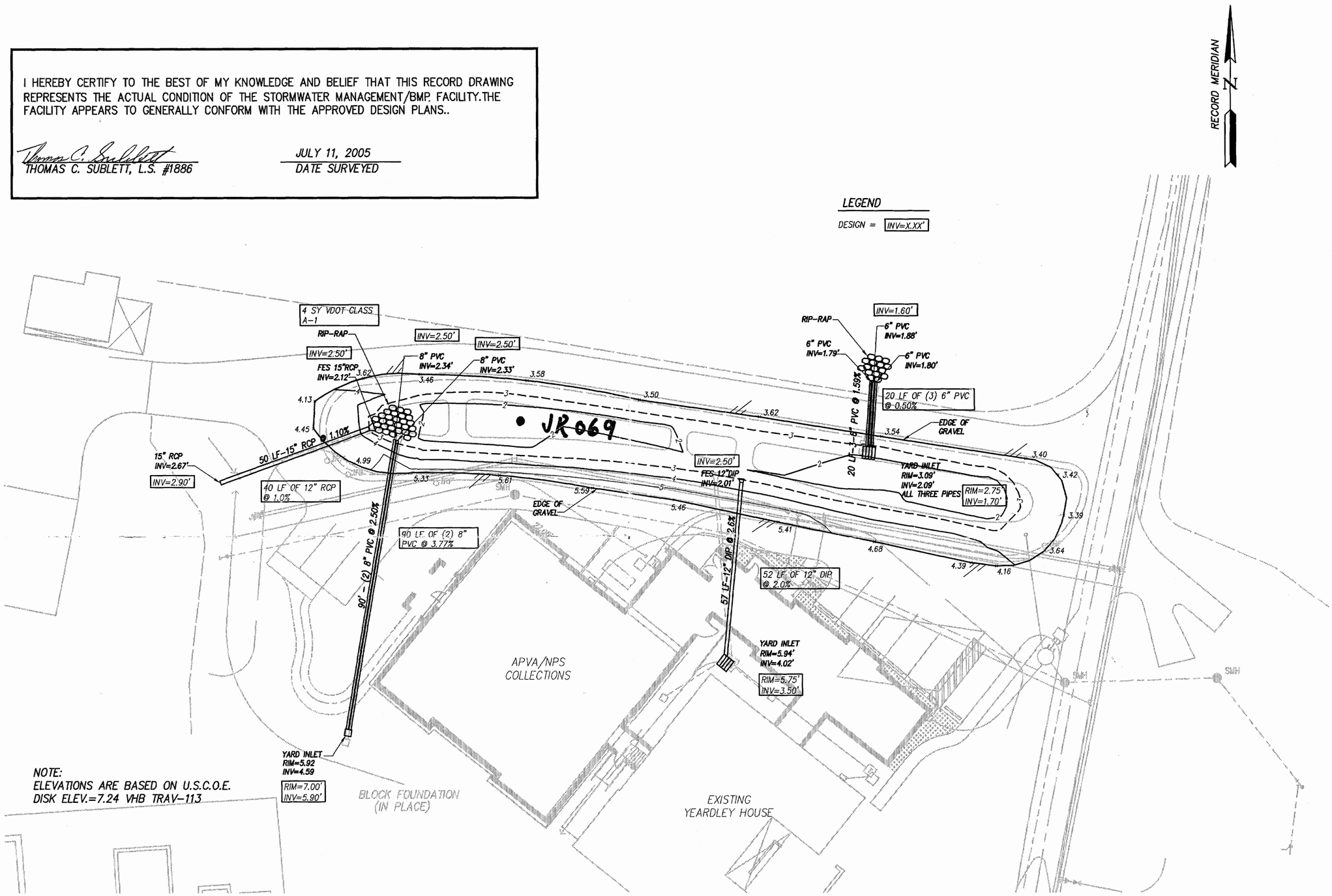

RECORD DRAWING 7/11/05

CONSULTING ENGINEERS
WILLIAMSBURG • RICHMOND

5248 Olde Towne Road, Suite 1
Williamsburg, Virginia 23188
(757) 253-0040
Fax (757) 220-8994

RECORD DRAWING OF THE STRUCTURES AT BIO-RETENTION POND

COLLECTIONS BUILDING

JAMESTOWN HISTORICAL PARK

JAMESTOWN DISTRICT JAMES CITY COUNTY VIRGINIA

COMMONWEALTH OF VIRGINIA
7/11/05
THOMAS C. SUBLETT
No. 1886
LAND SURVEYOR

No.	DATE	REVISION / COMMENT / NOTE	BY

Designed TCS	Drawn TCS/JDB
Scale 1"=20'	Date 7/11/05
Project No. 9352	
Drawing No. 1 OF 1	

\\vhb\proj\Williamsburg\31005.31\cad\ld\Planset\DALE HOUSE\Cover Sheet.dwg

SP-43-06

JUN 2006 RECEIVED PLANNING DEPARTMENT

COUNTY OF JAMES CITY
FINAL SITE PLAN

APPROVALS		DATE
Fire Dept	DS / JP	4/14/06
Health Dept	CP / JP	4/14/06
VDOT		
Planning		6/1/06
Environ	DEC / JP	5/14/06
Zoning Adm		6/1/06
JCSA	TOE	6/5/06
County Eng	WB / JP	4/12/06
REA		
Other		

Dale House Utility Extension

JCC CASE NO.: SP-43-06

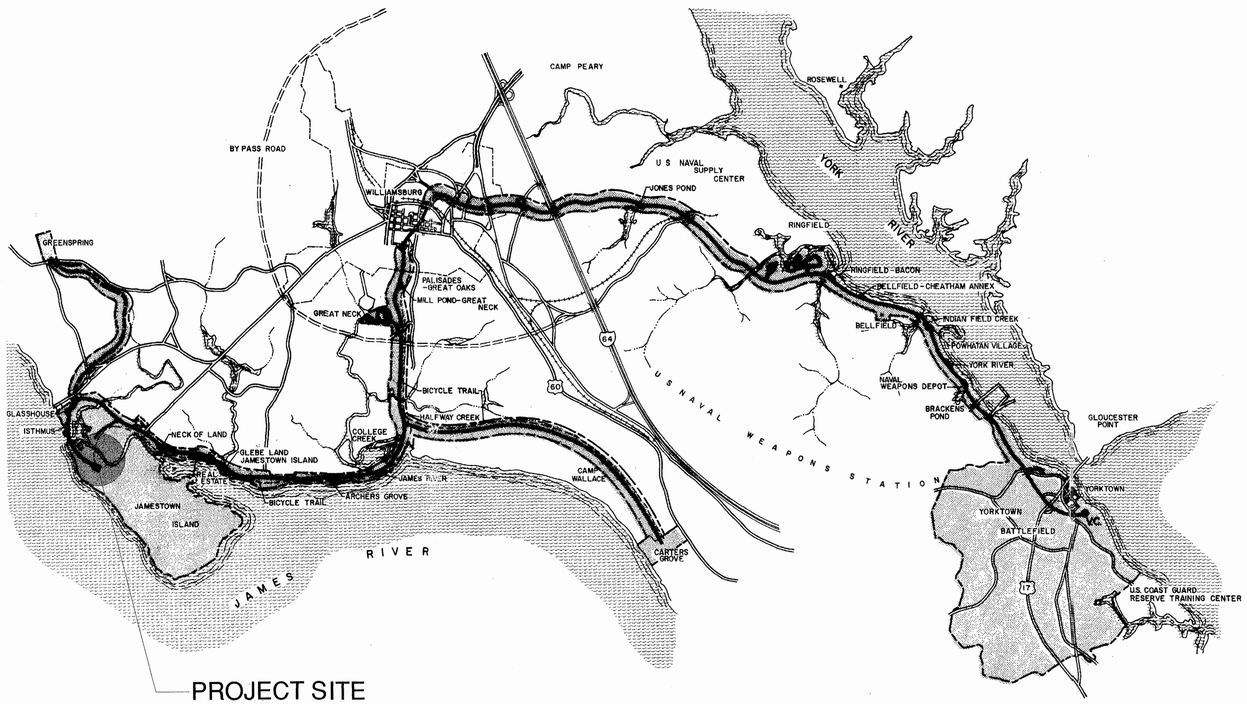

DRAWING INDEX

GENERAL

T1	COVER SHEET
G1	DRAWING INDEX

CIVIL

C1	GENERAL SYMBOLS AND LEGENDS
C2	SITE PLAN NOTES
C3	EROSION AND SEDIMENT CONTROL NOTES AND DETAILS
C4	OVERALL SITE PLAN
C5	DEMOLITION PLAN
C6	DEMOLITION PLAN
C7	SITE PLAN
C8	SITE PLAN
C9	GRADING PLAN
C10	GRADING PLAN
C11	LANDSCAPE PLAN
C12	SITE DETAILS
C13	SITE DETAILS
C14	SITE DETAILS
C15	BIORETENTION LANDSCAPE PLAN
C16	PLANT SCHEDULE AND DETAILS

UTILITIES

U1	WATER AND SANITARY PLAN AND PROFILE
U2	WATER AND SANITARY PLAN AND PROFILE
U3	WATER AND SANITARY PLAN AND PROFILE
U4	PUMP STATION DETAILS
U5	DETAILS
U6	DETAILS
*U7	DALE HOUSE UTILITIES
*U8	DALE HOUSE UTILITY PROFILES
*U9	DALE HOUSE PUMP STATION DETAILS
*U10	DALE HOUSE UTILITY DETAILS

*THESE SHEETS REPRESENT AMENDED SITE PLAN (June 1, 2006)

LEGEND

- PARK BOUNDARY
- V.C. VISITOR CENTER
- BICYCLE TRAIL

SITE DATA

ZONING CLASSIFICATION : R-8, RURAL RESIDENTIAL
PARCEL SIZE: 22.0 ACRES
PARCEL NUMBER : (54-2)(1-1)
OWNER : ASSOCIATION FOR THE PRESERVATION OF VIRGINIA ANTIQUITIES
EXISTING BUILDINGS : 11,908 SF
NEW BUILDINGS : 6,775 SF
TOTAL DISTURBED AREA: 1.25 ACRES
IMPERVIOUS AREA : NET INCREASE 0.07 ACRES
TOTAL OPEN SPACE : 21.57 ACRES
SPECIAL USE PERMIT NO. SUP-21-02

SPECIAL USE CONDITIONS:

1. AN ARCHAEOLOGICAL STUDY, PERFORMED IN ACCORDANCE WITH COUNTY POLICY SHALL BE SUBMITTED TO AND APPROVED BY THE DIRECTOR OF PLANNING BEFORE ANY LAND DISTURBING ACTIVITY WILL BE ALLOWED TO TAKE PLACE.

2. A SITE PLANS SHALL BE SUBMITTED TO AND APPROVED BY THE PLANNING DIRECTOR.

3. PRIOR TO PRELIMINARY SITE PLAN APPROVAL, AND ENGINEERING STUDY SHALL BE SUBMITTED TO AND APPROVED BY THE JAMES CITY SERVICE AUTHORITY CONFIRMING THE SANITARY SYSTEM CAPACITY.

4. PRIOR TO PRELIMINARY SITE PLAN APPROVAL, THE RESOURCE PROTECTION AREA AND BUFFER IN THE VICINITY OF THE POLE SHED AND PROPOSED BMP EASEMENT 2 (As Shown In The Drawing: Proposed NPS Easements At APVA Property, In The Conceptual Stormwater Management Plan For The James City County Special Use Permit Application) SHALL HAVE EXISTING EQUIPMENT AND DEBRIS REMOVED, AS APPROVED BY THE COUNTY ENVIRONMENTAL DIRECTOR. THIS AREA SHALL BE RESTORED WITH VEGETATION, AS APPROVED BY THE COUNTY ENVIRONMENTAL DIRECTOR.

5. GRID PAVERS OR OTHER PERVIOUS PAVING SURFACES SHALL BE USED IN PLACE OF IMPERVIOUS SURFACES FOR THE CONSTRUCTION OR RELOCATION OF ACCESS ROADWAYS OR PATHS WITHIN THE 50-FOOT RESOURCE PROTECTION BUFFER, AS APPROVED BY THE COUNTY ENVIRONMENTAL DIRECTOR.

6. THE FEATURES THAT ARE LIKELY HUMAN BURIALS MUST BE PRESERVED IN PLACE IN A MANNER CONSISTENT WITH GUIDELINES SET BY THE VIRGINIA DEPARTMENT OF HISTORIC RESOURCES WITH IN SITU DOCUMENTATION PROTOCOLS.

PROJECT DESCRIPTION

THE PROPOSED COLLECTIONS RESEARCH FACILITY IS TO BE ADJACENT TO THE EXISTING YEARDLEY HOUSE AND ITS JAMESTOWN REDISCOVERY CENTER ADDITION. THE NEW FACILITY WILL BE USED, IN PART, TO HOUSE APVA AND NPS COLLECTIONS TOGETHER. THE ADDITION IS 7,500 SQUARE FEET ON TWO FLOORS. THE ROOMS IN THE NEW ADDITION ARE INTENDED FOR STORAGE, A PROCESSING LAB, CURATOR WORK SPACE, OFFICES, A LIBRARY, AND RESTROOMS. LIMITED ON SITE PARKING IS AVAILABLE AT THE FACILITY WITH ADDITIONAL OFF SITE PARKING LOCATED NEARBY VIA THE PROPOSED PATH AT THE EXISTING NPS VISITOR CENTER. THE FACILITY IS NOT OPEN TO THE PUBLIC.

SCALE 1 0 1 2 3 MILES

Engineer's Certificate:

I Hereby Certify To The Best of My Knowledge and Belief That All The Requirements of James City County, Virginia Regarding This Project Have Been Complied With.

Timothy J. Hogan P.E. No. 032551 — 6/01/06 Date

COMMONWEALTH OF VIRGINIA
TIMOTHY J. HOGAN
No. 032551
6/01/06
PROFESSIONAL ENGINEER

Ammended Site Plan for: Collections Building (SP-065-03)

Colonial National Historical Park, Jamestown, VA

Prepared By:
Carlton Abbott and Partners, P.C.
Architects and Landscape Architects
402 Duke Of Gloucester Street , Room 240
Williamsburg, Virginia 23185
Telephone (757) 220-1095 Fax (757) 229-8604
cabbott@carltonabbott.com

VHB Vanasse Hangen Brustlin, Inc.

Mark	Sheet	REVISION	Date	Initial

QUALITY DESIGN CERTIFICATION
☒ Prepared in Accordance with Preliminary Design (Title I) 333/25,040 Drawing No.
OR
☐ Variance from Preliminary Design (Title I) Approved by Superintendent on _____ Date
OR
☐ Construction Drawing Not Preceded by Preliminary Design (Title I)
Project Manager — Date

SITE PLAN SUBMISSION
UNITED STATES DEPARTMENT OF THE INTERIOR
NATIONAL PARK SERVICE
DENVER SERVICE CENTER

TITLE OF DRAWING: COLLECTIONS BUILDING
LOCATION WITHIN PARK: HISTORIC JAMESTOWN
NAME OF PARK: COLONIAL NATIONAL HISTORICAL PARK
REGION: SOUTHEAST — COUNTY: JAMES CITY — STATE: VIRGINIA

DRAWING NO. 333/25040
PKG. NO. COLO 404
SHEET 1 OF 5

D:\ Active Projects \ Jamestown \ 04-18-03 Submission \ T1.dwg, 04-18-03 04:25:21 pm, CAP 700.pc3, CAP

JR069_COLLECTION_BUILDING_COLONIAL_NAT_PARK - 014

\\vhb\proj\Williamsburg\31005.31\cad\ld\Planset\DALE HOUSE\3100531-DH-PP.dwg

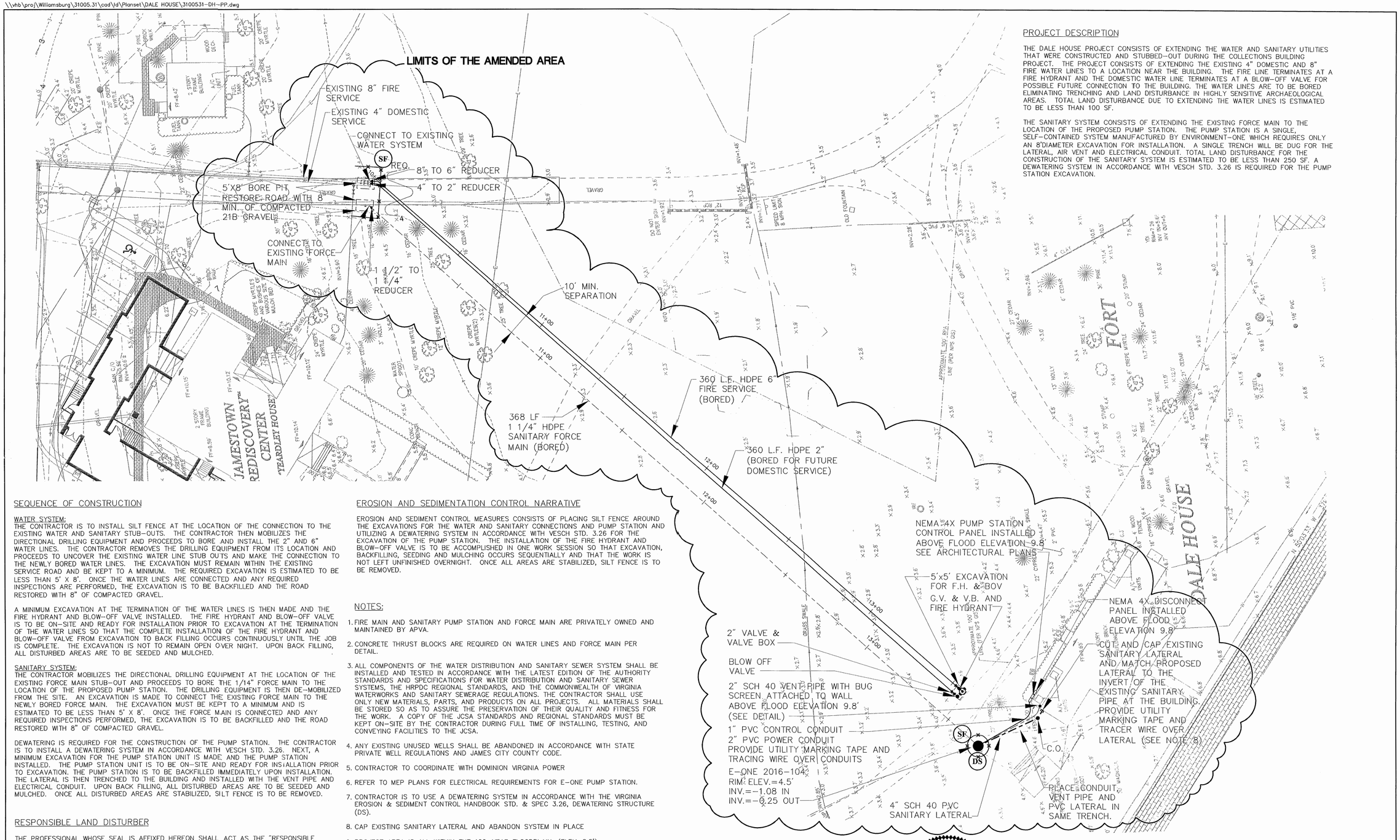

PROJECT DESCRIPTION

THE DALE HOUSE PROJECT CONSISTS OF EXTENDING THE WATER AND SANITARY UTILITIES THAT WERE CONSTRUCTED AND STUBBED-OUT DURING THE COLLECTIONS BUILDING PROJECT. THE PROJECT CONSISTS OF EXTENDING THE EXISTING 4" DOMESTIC AND 8" FIRE WATER LINES TO A LOCATION NEAR THE BUILDING. THE FIRE LINE TERMINATES AT A FIRE HYDRANT AND THE DOMESTIC WATER LINE TERMINATES AT A BLOW-OFF VALVE FOR POSSIBLE FUTURE CONNECTION TO THE BUILDING. THE WATER LINES ARE TO BE BORED ELIMINATING TRENCHING AND LAND DISTURBANCE IN HIGHLY SENSITIVE ARCHAEOLOGICAL AREAS. TOTAL LAND DISTURBANCE DUE TO EXTENDING THE WATER LINES IS ESTIMATED TO BE LESS THAN 100 SF.

THE SANITARY SYSTEM CONSISTS OF EXTENDING THE EXISTING FORCE MAIN TO THE LOCATION OF THE PROPOSED PUMP STATION. THE PUMP STATION IS A SINGLE, SELF-CONTAINED SYSTEM MANUFACTURED BY ENVIRONMENT-ONE WHICH REQUIRES ONLY AN 8'DIAMETER EXCAVATION FOR INSTALLATION. A SINGLE TRENCH WILL BE DUG FOR THE LATERAL, AIR VENT AND ELECTRICAL CONDUIT. TOTAL LAND DISTURBANCE FOR THE CONSTRUCTION OF THE SANITARY SYSTEM IS ESTIMATED TO BE LESS THAN 250 SF. A DEWATERING SYSTEM IN ACCORDANCE WITH VESCH STD. 3.26 IS REQUIRED FOR THE PUMP STATION EXCAVATION.

SEQUENCE OF CONSTRUCTION

WATER SYSTEM:
THE CONTRACTOR IS TO INSTALL SILT FENCE AT THE LOCATION OF THE CONNECTION TO THE EXISTING WATER AND SANITARY STUB-OUTS. THE CONTRACTOR THEN MOBILIZES THE DIRECTIONAL DRILLING EQUIPMENT AND PROCEEDS TO BORE AND INSTALL THE 2" AND 6" WATER LINES. THE CONTRACTOR REMOVES THE DRILLING EQUIPMENT FROM ITS LOCATION AND PROCEEDS TO UNCOVER THE EXISTING WATER LINE STUB OUTS AND MAKE THE CONNECTION TO THE NEWLY BORED WATER LINES. THE EXCAVATION MUST REMAIN WITHIN THE EXISTING SERVICE ROAD AND BE KEPT TO A MINIMUM. THE REQUIRED EXCAVATION IS ESTIMATED TO BE LESS THAN 5' X 8'. ONCE THE WATER LINES ARE CONNECTED AND ANY REQUIRED INSPECTIONS ARE PERFORMED, THE EXCAVATION IS TO BE BACKFILLED AND THE ROAD RESTORED WITH 8" OF COMPACTED GRAVEL.

A MINIMUM EXCAVATION AT THE TERMINATION OF THE WATER LINES IS THEN MADE AND THE FIRE HYDRANT AND BLOW-OFF VALVE INSTALLED. THE FIRE HYDRANT AND BLOW-OFF VALVE IS TO BE ON-SITE AND READY FOR INSTALLATION PRIOR TO EXCAVATION AT THE TERMINATION OF THE WATER LINES SO THAT THE COMPLETE INSTALLATION OF THE FIRE HYDRANT AND BLOW-OFF VALVE FROM EXCAVATION TO BACK FILLING OCCURS CONTINUOUSLY UNTIL THE JOB IS COMPLETE. THE EXCAVATION IS NOT TO REMAIN OPEN OVER NIGHT. UPON BACK FILLING, ALL DISTURBED AREAS ARE TO BE SEEDED AND MULCHED.

SANITARY SYSTEM:
THE CONTRACTOR MOBILIZES THE DIRECTIONAL DRILLING EQUIPMENT AT THE LOCATION OF THE EXISTING FORCE MAIN STUB-OUT AND PROCEEDS TO BORE THE 1/14" FORCE MAIN TO THE LOCATION OF THE PROPOSED PUMP STATION. THE DRILLING EQUIPMENT IS THEN DE-MOBILIZED FROM THE SITE. AN EXCAVATION IS MADE TO CONNECT THE EXISTING FORCE MAIN TO THE NEWLY BORED FORCE MAIN. THE EXCAVATION MUST BE KEPT TO A MINIMUM AND IS ESTIMATED TO BE LESS THAN 5' X 8'. ONCE THE FORCE MAIN IS CONNECTED AND ANY REQUIRED INSPECTIONS PERFORMED, THE EXCAVATION IS TO BE BACKFILLED AND THE ROAD RESTORED WITH 8" OF COMPACTED GRAVEL.

DEWATERING IS REQUIRED FOR THE CONSTRUCTION OF THE PUMP STATION. THE CONTRACTOR IS TO INSTALL A DEWATERING SYSTEM IN ACCORDANCE WITH VESCH STD. 3.26. NEXT, A MINIMUM EXCAVATION FOR THE PUMP STATION UNIT IS MADE AND THE PUMP STATION INSTALLED. THE PUMP STATION UNIT IS TO BE ON-SITE AND READY FOR INSTALLATION PRIOR TO EXCAVATION. THE PUMP STATION IS TO BE BACKFILLED IMMEDIATELY UPON INSTALLATION. THE LATERAL IS THEN TRENCHED TO THE BUILDING AND INSTALLED WITH THE VENT PIPE AND ELECTRICAL CONDUIT. UPON BACK FILLING, ALL DISTURBED AREAS ARE TO BE SEEDED AND MULCHED. ONCE ALL DISTURBED AREAS ARE STABILIZED, SILT FENCE IS TO BE REMOVED.

RESPONSIBLE LAND DISTURBER

THE PROFESSIONAL WHOSE SEAL IS AFFIXED HEREON SHALL ACT AS THE "RESPONSIBLE LAND DISTURBER" FOR PURPOSE OF PLAN APPROVAL ONLY. PRIOR TO THE LAND DISTURBING PERMIT, THE OWNER OR DEVELOPER SHALL PROVIDE THE NAME OF A "RESPONSIBLE LAND DISTURBER" FOR THE CONSTRUCTION PHASE OF THE PROJECT. THE OWNER OR DEVELOPER SHALL PROVIDE WRITTEN NOTIFICATION SHOULD THE "RESPONSIBLE LAND DISTURBER" CHANGE DURING CONSTRUCTION.

EROSION AND SEDIMENTATION CONTROL NARRATIVE

EROSION AND SEDIMENT CONTROL MEASURES CONSISTS OF PLACING SILT FENCE AROUND THE EXCAVATIONS FOR THE WATER AND SANITARY CONNECTIONS AND PUMP STATION AND UTILIZING A DEWATERING SYSTEM IN ACCORDANCE WITH VESCH STD. 3.26 FOR THE EXCAVATION OF THE PUMP STATION. THE INSTALLATION OF THE FIRE HYDRANT AND BLOW-OFF VALVE IS TO BE ACCOMPLISHED IN ONE WORK SESSION SO THAT EXCAVATION, BACKFILLING, SEEDING AND MULCHING OCCURS SEQUENTIALLY AND THAT THE WORK IS NOT LEFT UNFINISHED OVERNIGHT. ONCE ALL AREAS ARE STABILIZED, SILT FENCE IS TO BE REMOVED.

NOTES;

1. FIRE MAIN AND SANITARY PUMP STATION AND FORCE MAIN ARE PRIVATELY OWNED AND MAINTAINED BY APVA.
2. CONCRETE THRUST BLOCKS ARE REQUIRED ON WATER LINES AND FORCE MAIN PER DETAIL.
3. ALL COMPONENTS OF THE WATER DISTRIBUTION AND SANITARY SEWER SYSTEM SHALL BE INSTALLED AND TESTED IN ACCORDANCE WITH THE LATEST EDITION OF THE AUTHORITY STANDARDS AND SPECIFICATIONS FOR WATER DISTRIBUTION AND SANITARY SEWER SYSTEMS, THE HRPDC REGIONAL STANDARDS, AND THE COMMONWEALTH OF VIRGINIA WATERWORKS AND SANITARY SEWERAGE REGULATIONS. THE CONTRACTOR SHALL USE ONLY NEW MATERIALS, PARTS, AND PRODUCTS ON ALL PROJECTS. ALL MATERIALS SHALL BE STORED SO AS TO ASSURE THE PRESERVATION OF THEIR QUALITY AND FITNESS FOR THE WORK. A COPY OF THE JCSA STANDARDS AND REGIONAL STANDARDS MUST BE KEPT ON-SITE BY THE CONTRACTOR DURING FULL TIME OF INSTALLING, TESTING, AND CONVEYING FACILITIES TO THE JCSA.
4. ANY EXISTING UNUSED WELLS SHALL BE ABANDONED IN ACCORDANCE WITH STATE PRIVATE WELL REGULATIONS AND JAMES CITY COUNTY CODE.
5. CONTRACTOR TO COORDINATE WITH DOMINION VIRGINIA POWER
6. REFER TO MEP PLANS FOR ELECTRICAL REQUIREMENTS FOR E-ONE PUMP STATION.
7. CONTRACTOR IS TO USE A DEWATERING SYSTEM IN ACCORDANCE WITH THE VIRGINIA EROSION & SEDIMENT CONTROL HANDBOOK STD. & SPEC 3.26, DEWATERING STRUCTURE (DS).
8. CAP EXISTING SANITARY LATERAL AND ABANDON SYSTEM IN PLACE
9. PROJECT AREA IS ALL WITHIN THE 100-YEAR FLOODPLAIN. (ELEV. 8.5')
10. ALL AREAS DESIGNATED FOR TRENCHING OR BORING OPERATIONS ARE TO BE CLEARED BY APVA ARCHAEOLOGISTS PRIOR TO LAND DISTURBING ACTIVITIES.
11. ALL EXCAVATIONS REQUIRED FOR TRENCHING OR BORING OPERATIONS SHALL BE MONITORED BY APVA ARCHAEOLOGISTS.
12. MAINTAIN FIVE FEET MINIMUM DEPTH BELOW EXISTING GRADE FOR ALL BORING OPERATIONS.

20 0 20 40
SCALE IN FEET

SCALE Ⓐ

COMMONWEALTH OF VIRGINIA
TIMOTHY J. HOGAN
No. 032551
6/01/06
PROFESSIONAL ENGINEER

DESIGNED: TJH	SUB SHEET NO.	TITLE OF SHEET	DRAWING NO. 333 / 41,060
DRAWN: RJW	U7	**Dale House Utilities**	
TECH. REVIEW LP		JAMESTOWN ISLAND UTILITIES	PKG. NO. 733 82
DATE: 6/01/06		COLONIAL NATIONAL HISTORICAL PARK	SHEET 2 OF 5

JR069_COLLECTION_BUILDING_COLONIAL_NAT_PARK - 015

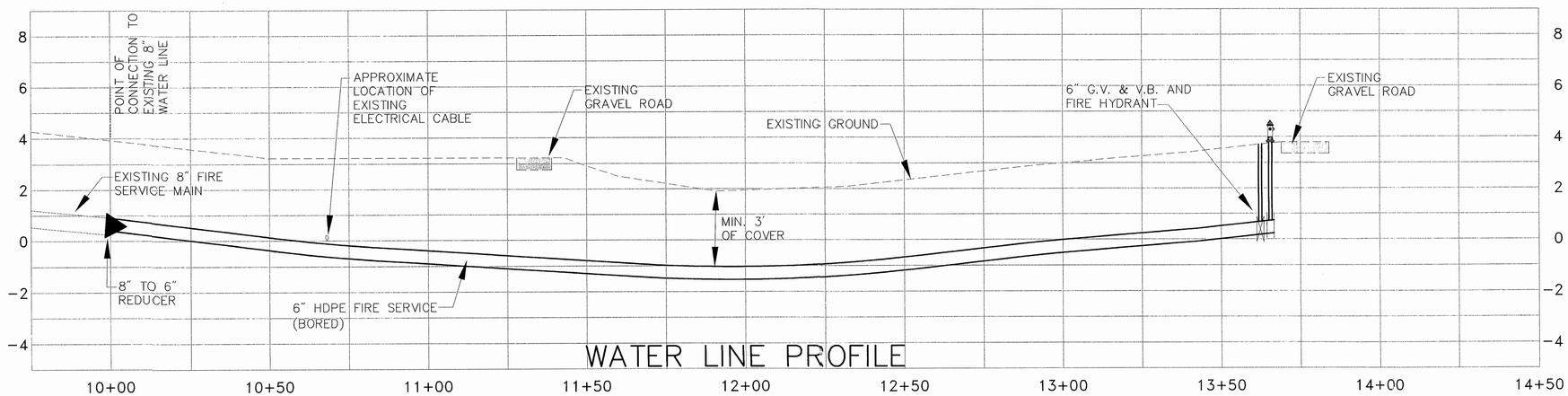

WATER LINE PROFILE

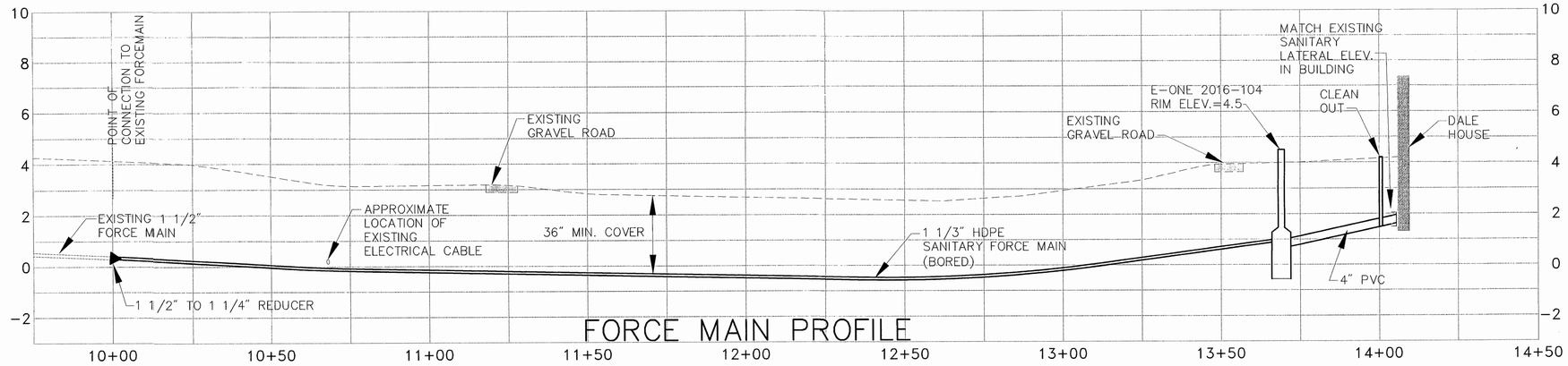

FORCE MAIN PROFILE

SCALE (A)

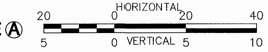

SCALE IN FEET

COMMONWEALTH OF VIRGINIA
TIMOTHY J. HOGAN
No. 032551
6/01/06
PROFESSIONAL ENGINEER

DESIGNED: TJH	SUB SHEET NO.	TITLE OF SHEET	DRAWING NO. 333 / 41,060
DRAWN: RJW	U8	**Dale House Utility Profiles**	PKG. NO. 733 82
TECH. REVIEW LP		JAMESTOWN ISLAND UTILITIES	SHEET 3 OF 5
DATE: 6/01/06		COLONIAL NATIONAL HISTORICAL PARK	

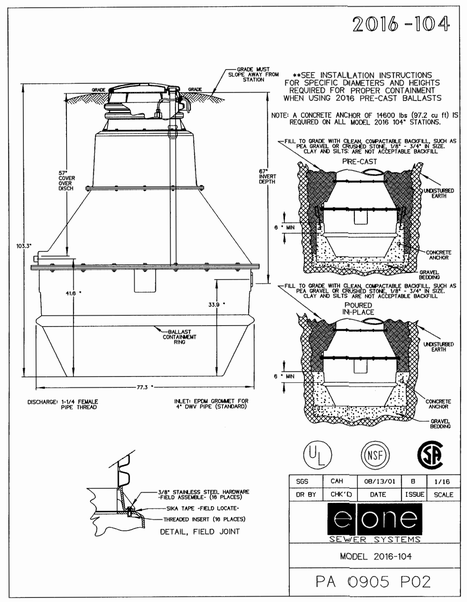

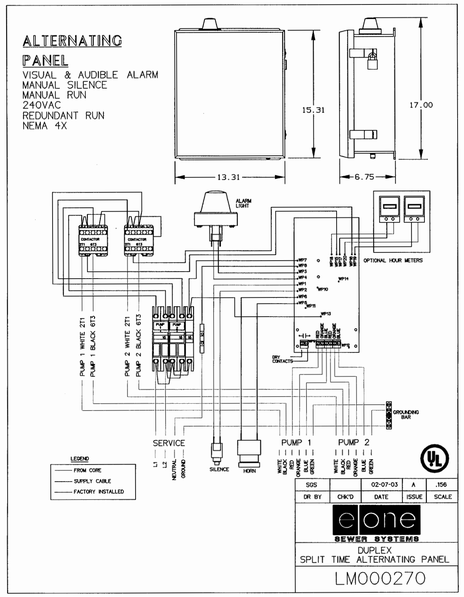

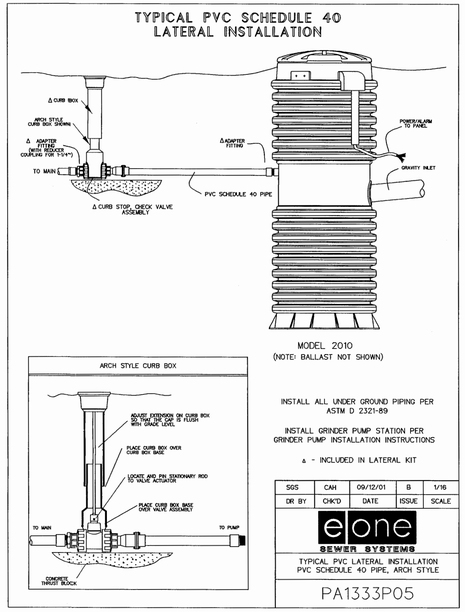

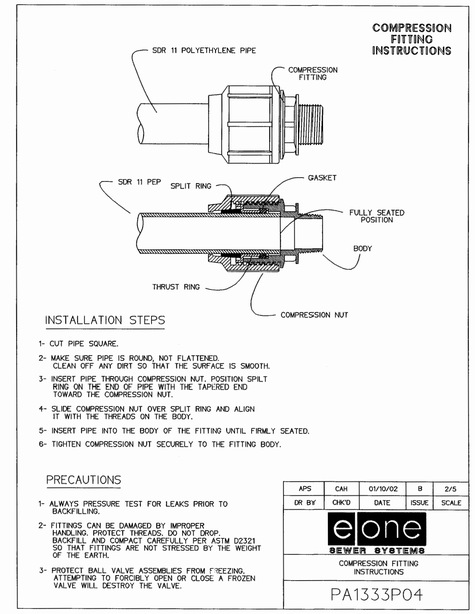

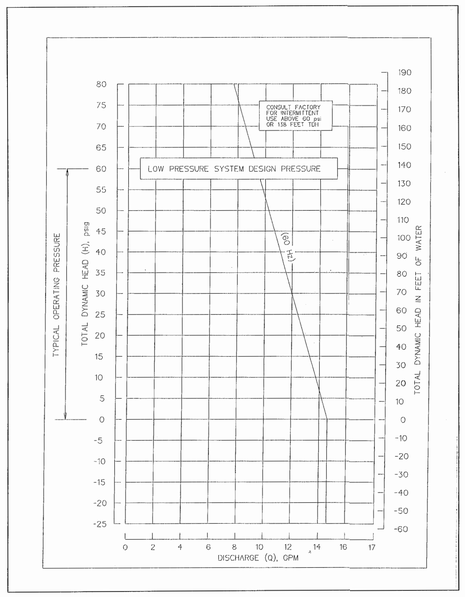

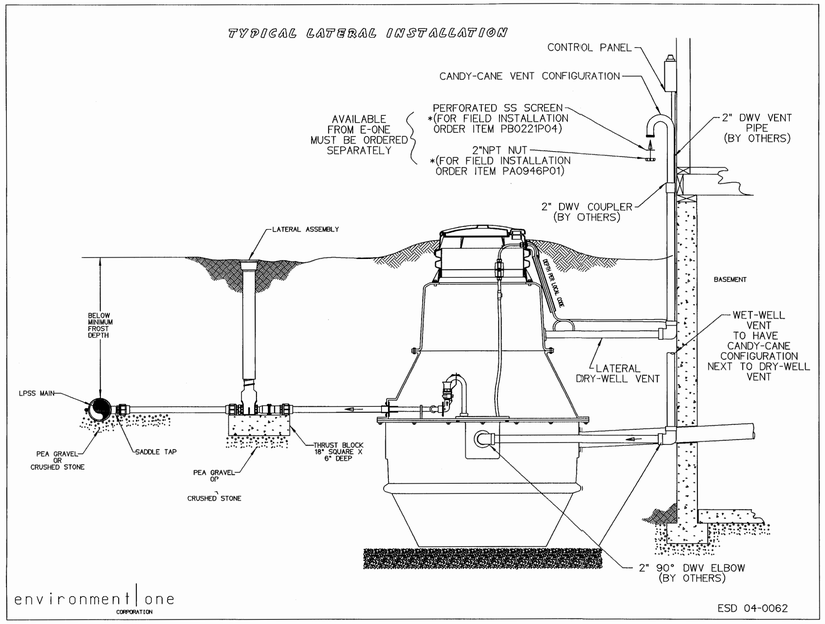

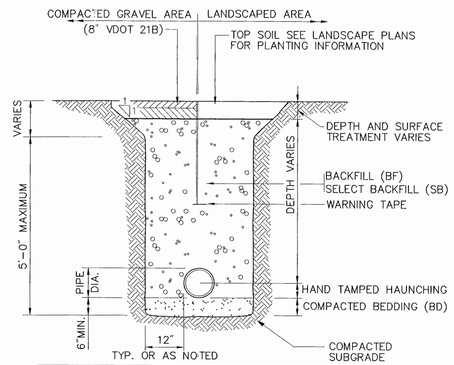

Notes:

1. WHERE UTILITY TRENCHES ARE CONSTRUCTED THROUGH DETENTION BASIN BERMS OR OTHER SUCH SPECIAL SECTIONS, PLACE TRENCH BACKFILL WITH MATERIALS SIMILAR TO THE SPECIAL SECTION REQUIREMENTS.
2. USE METALLIC TRACING/WARNING TAPE OVER ALL PIPES.

Utility Trench 5/02, REV 4-03

N.T.S. Source: VHB REV LD_300

COMMONWEALTH OF VIRGINIA
TIMOTHY J. HOGAN
No. 032551
6/01/06
PROFESSIONAL ENGINEER

DESIGNED: TJH	SUB SHEET NO.	TITLE OF SHEET	DRAWING NO.
DRAWN: RJW	U9	**Dale House Pump Station Details**	333 41,060
TECH. REVIEW LP		JAMESTOWN ISLAND UTILITIES	PKG. NO. 733 82
DATE: 6/01/06		COLONIAL NATIONAL HISTORICAL PARK	SHEET 4 OF 5

\\vhb\proj\Williamsburg\31005.31\cad\d\Planset\DALE HOUSE\3100531-DH-PumpStation DET.dwg

JR069_COLLECTION_BUILDING_COLONIAL_NAT_PARK - 017

NOTE:
MARK WITH A 'W' FOR WATER DISTRIBUTION SYSTEMS OR 'S' FOR SANITARY SYSTEMS. TOP & BOTTOM OF LETTER DESIGNATION TO BE IN LINE WITH NOTCHES.

HAMPTON ROADS PLANNING DISTRICT COMMISSION
REGIONAL CONSTRUCTION STANDARDS

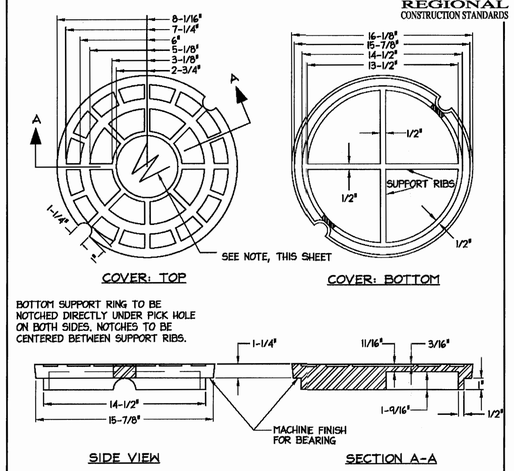

SEE WS_01, SHEET 2 OF 2 FOR NOTES & FRAME DETAILS.

STANDARD VALVE BOX FRAME AND COVER

NOT TO SCALE

REFERENCE	CATEGORY	DATE	SHEET No.	DETAIL No.
200,801,803	WATER & SANITARY	01/03	1 OF 2	WS_01

HAMPTON ROADS PLANNING DISTRICT COMMISSION
REGIONAL CONSTRUCTION STANDARDS

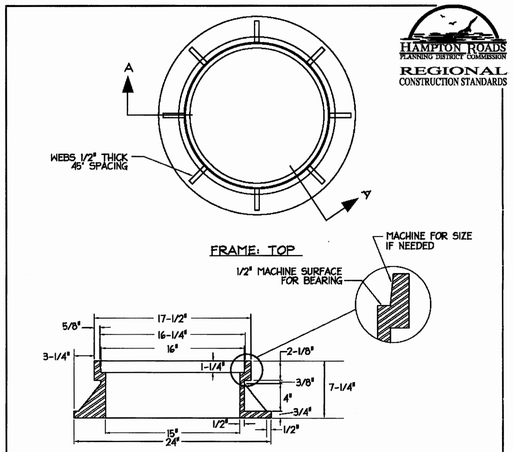

NOTES:

1. VALVE BOX FRAME AND COVER TO BE SUPPLIED BY CAPITAL FOUNDRY OF VIRGINIA, INC., MODEL #NPA-15-W, 160 LBS., OR APPROVED EQUAL.
2. ALL GRAY IRON CASTINGS SHALL CONFORM TO LATEST EDITION OF ASTM A-48, CLASS 30 AND SHALL BE OF UNIFORM QUALITY.
3. ALL CASTING DIMENSIONS SHALL HAVE A TOLERANCE OF 1/8"±.
4. ALL CASTINGS SHALL BE CLEANED BY SHOT BLASTING AND HAND CHIPPING UTILIZING STANDARD INDUSTRY PRACTICES PRIOR TO SHOP APPLICATION OF ASPHALTIC COATING, BY DIPPING.

STANDARD VALVE BOX FRAME AND COVER

NOT TO SCALE

REFERENCE	CATEGORY	DATE	SHEET No.	DETAIL No.
200,801,803	WATER & SANITARY	01/03	2 OF 2	WS_01

HAMPTON ROADS PLANNING DISTRICT COMMISSION
REGIONAL CONSTRUCTION STANDARDS

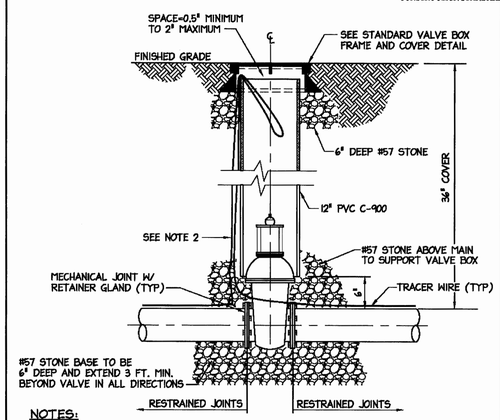

NOTES:

1. IF OPERATING NUT IS GREATER THAN 48" BELOW TOP OF VALVE BOX FRAME, A VALVE STEM EXTENSION MAY BE INSTALLED. THE EXTENSION SHALL REPLACE OR BE SECURELY ATTACHED TO THE NORMAL 2 INCH SQUARE OPERATING NUT, SHALL BE AT LEAST AS STRONG AS THE VALVE STEM, AND SHALL BE COATED IN ACCORDANCE WITH AWWA C550. VALVE STEM EXTENSIONS MUST BE APPROVED BY THE LOCALITY.
2. PLASTIC COATED 10 GAUGE SOLID COPPER TRACER WIRE TO BE ATTACHED WITH PLASTIC STRAPPING EVERY 10 FEET OF LENGTH. WIRE TO BE LOOPED THROUGH VALVE BOX AND EXTEND 12 INCHES ABOVE FINISHED GRADE AND COILED BACK INTO VALVE BOX.

VALVE SETTING DETAIL

NOT TO SCALE

REFERENCE	CATEGORY	DATE	SHEET No.	DETAIL No.
200,801,803	WATER & SANITARY	01/03	1 OF 1	WS_02

HAMPTON ROADS PLANNING DISTRICT COMMISSION
REGIONAL CONSTRUCTION STANDARDS

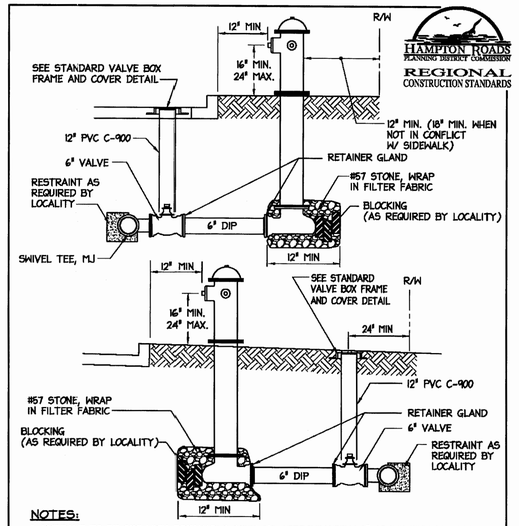

NOTES:

1. HYDRANT TO BE SET WITH BREAKABLE COUPLING APPROXIMATELY 3' ABOVE FINISHED GRADE.
2. STEAMER NOZZLE IS TO FACE ROADWAY UNLESS OTHERWISE NOTED.
3. TRACER WIRE REQUIRED.
4. ALL VALVES TO BE MJ.

FIRE HYDRANT SETTING (TYPE I)

NOT TO SCALE

REFERENCE	CATEGORY	DATE	SHEET No.	DETAIL No.
200,801	WATER DISTRIBUTION	01/03	1 OF 1	WD_06

HAMPTON ROADS PLANNING DISTRICT COMMISSION
REGIONAL CONSTRUCTION STANDARDS

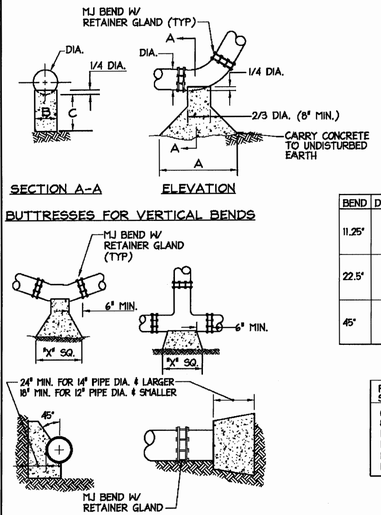

BEND	DIMENSION	LENGTH
11.25°	A	25"
	B	17"
	C	9"
	CY	0.06
22.5°	A	34"
	B	23"
	C	12"
	CY	0.14
45°	A	48"
	B	32"
	C	16"
	CY	0.34

PIPE SIZE	DIMENSION "X"
6"	18"
8"	24"
10"	30"
12"	36"
14"	42"
16"	48"

SEE WS_05, SHEET 2 OF 2 FOR NOTES AND ADDITIONAL DETAILS.

STANDARD THRUST BLOCKS

NOT TO SCALE

REFERENCE	CATEGORY	DATE	SHEET No.	DETAIL No.
200,801,803	WATER & SANITARY	01/03	1 OF 2	WS_05

HAMPTON ROADS PLANNING DISTRICT COMMISSION
REGIONAL CONSTRUCTION STANDARDS

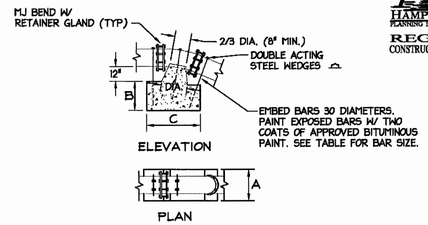

ANCHORAGE FOR VERTICAL BENDS

BEND	DIMENSION	LENGTH
11.25°	A	42"
	B	32"
	C	55"
	CY	1.75"
22.5°	A	54"
	B	41"
	C	70"
	CY	3.54"
45°	A	68"
	B	52"
	C	89"
	CY	7.02"

PIPE SIZE	11.25°	22.5°	45°
4"	3-NO.6	3-NO.6	3-NO.6
6"	3-NO.6	3-NO.6	3-NO.6
8"	3-NO.6	3-NO.6	3-NO.6
12"	3-NO.6	3-NO.6	3-NO.6
14"	3-NO.6	3-NO.6	3-NO.6
16"	3-NO.6	3-NO.6	3-NO.6
18"	3-NO.6	3-NO.6	3-NO.6
20"	3-NO.6	3-NO.6	3-NO.6
24"	3-NO.6	3-NO.6	5-NO.6
30"	3-NO.6	5-NO.6	5-NO.7
36"	4-NO.6	5-NO.6	6-NO.7

NOTES:

1. ALL CONCRETE TO BE CLASS A-3.
2. BUTTRESS DIMENSIONS SHOWN ARE MINIMUM. DIMENSIONS ARE BASED UPON SOIL BEARING PRESSURE OF 3000 P.S.F. AND STATIC WATER PRESSURE OF 150 P.S.I. WHERE PRESSURE EXCEEDS 150 P.S.I. OR WHERE SOIL BEARING CAPACITY IS LESS THAN 3000 P.S.I, SPECIAL BUTTRESS DESIGNS ARE REQUIRED.
3. PLACE 5 MIL. POLYURETHANE BETWEEN PIPE & CONCRETE THRUST BLOCK.

STANDARD THRUST BLOCKS

NOT TO SCALE

REFERENCE	CATEGORY	DATE	SHEET No.	DETAIL No.
200,801,803	WATER & SANITARY	01/03	2 OF 2	WS_05

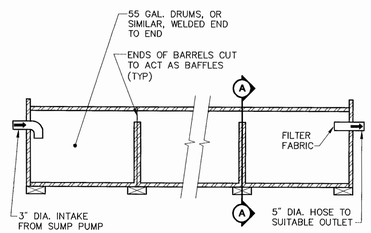

Elevation

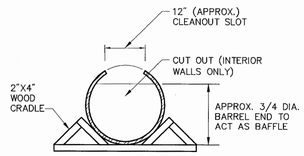

Cross-Section A-A

Portable Sediment Tank

(DS) 11/02

N.T.S. Source: Virginia Erosion And Sediment Control Handbook Plate 3.26-1

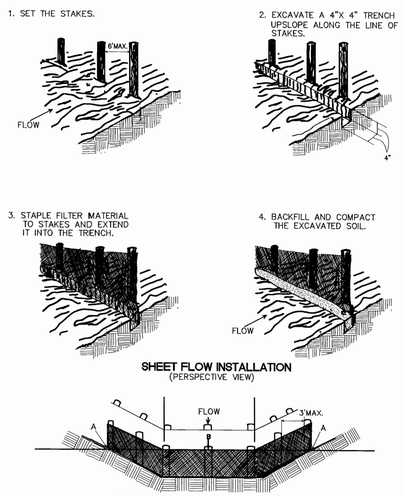

Construction of a Silt Fence (Without Wire Support)

(SF)

PL3-05-2 VAESCH Std. and Spec. No. 3.05-2 N.T.S.

COMMONWEALTH OF VIRGINIA
TIMOTHY J. HOGAN
No. 032551
6/01/06
PROFESSIONAL ENGINEER

DESIGNED: TJH	SUB SHEET NO.	TITLE OF SHEET	DRAWING NO.
DRAWN: RJW	U10	Dale House Utility Details	333 / 41,060
TECH. REVIEW LP		JAMESTOWN ISLAND UTILITIES	PKG. NO. 733 82
DATE: 6/01/06		COLONIAL NATIONAL HISTORICAL PARK	SHEET 5 OF 5

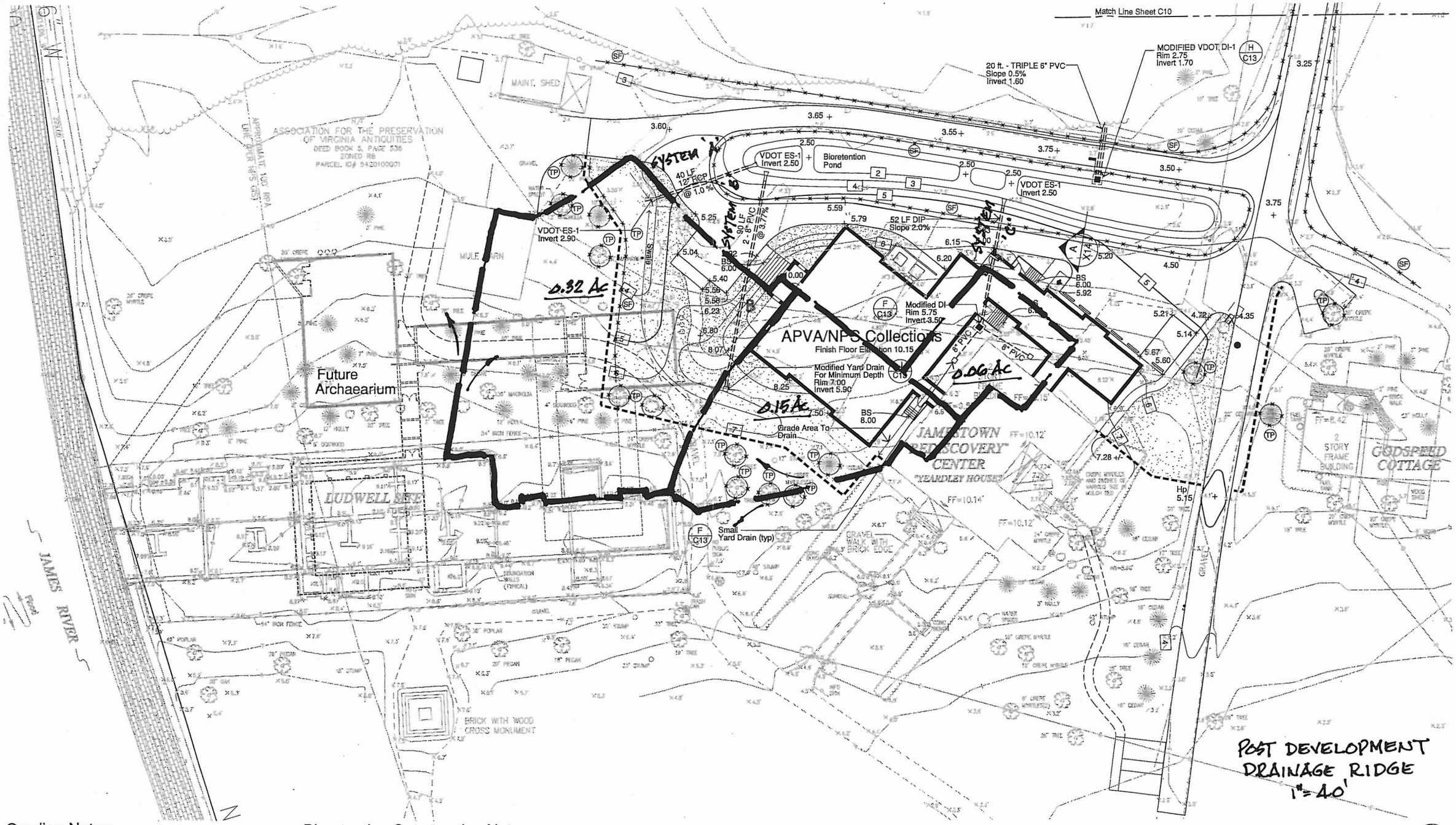

Grading Notes:

1. SEE SHEET C1 FOR LEGENDS AND ABBRIEVIATIONS.
2. SEE SHEET C2 FOR GENERAL SITE NOTES.
3. SEE SHEET C3 FOR EROSION AND SEDIMENT CONTROL NOTES AND DETAILS.

Bioretention Construction Notes:

1. BIORETENTION AREAS SHALL NOT BE CONSTRUCTED UNTIL THE ENTIRE CONTRIBUTING DRAINAGE AREA HAS BEEN STABILIZED. THE BIORETENTION AREA SHALL BE PROTECTED FROM SEDIMENT LADEN RUNOFF DURING CONSTRUCTION.
2. THE BIORETENTION AREAS SHALL CONTAIN A PLANTING SOIL MIXTURE OF 60 %-70% SAND, 30 %-35% SANDY TOPSOIL, AND A MAXIMUM OF 5 %-10% ORGANIC MATTER.
3. A 3" THICK MULCH LAYER SHALL BE PROVIDED ON TOP OF THE PLANTING SOIL. AN ACCEPTABLE MULCH LAYER SHALL INCLUDE SHREDDED HARDWOOD OR SHREDDED WOOD CHIP OR SIMILAR MATERIAL.
4. THE SAND FOR THE BIORETENTION AREA SHALL BE ASTM C-33 CONCRETE SAND AND FREE OF DELETERIOUS MATERIAL.
5. SANDY TOPSOIL SHALL CONSIST OF EXISTING TOPSOIL STOCKPILED ON SITE OR IMPORTED TOPSOIL WITH SAND ADDED TO PROVIDE A SANDY LOAM OR LOAMY SAND OF UNIFORM COMPOSITION WITH PERCENTAGES OF CLAY IN ACCORDANCE WITH THE U.S.D.A. TEXTURAL TRIANGLE.
6. PLANTING SOIL SHALL BE PLACED IN LIFTS LESS THAN 18 INCHES AND LIGHTLY COMPACTED (MINIMUM COMPACTIVE EFFORT) BY TAMPING OR ROLLED WITH A HAND-OPERATED LANDSCAPE ROLLER. HEAVY EQUIPMENT SHALL BE RESTRICTED FROM TRAVELING OVER THE BIORETENTION AREA.

DESIGNED:	SUB SHEET NO.	TITLE OF SHEET	DRAWING NO. 333/25040
DRAWN:	C9	Grading Plan Collections Building COLONIAL NATIONAL HISTORICAL PARK	PKG. NO. 404
TECH. REVIEW			SHEET 11 OF ___
DATE: May 16, 2003			

JR069_COLLECTION_BUILDING_COLONIAL_NAT_PARK - 019

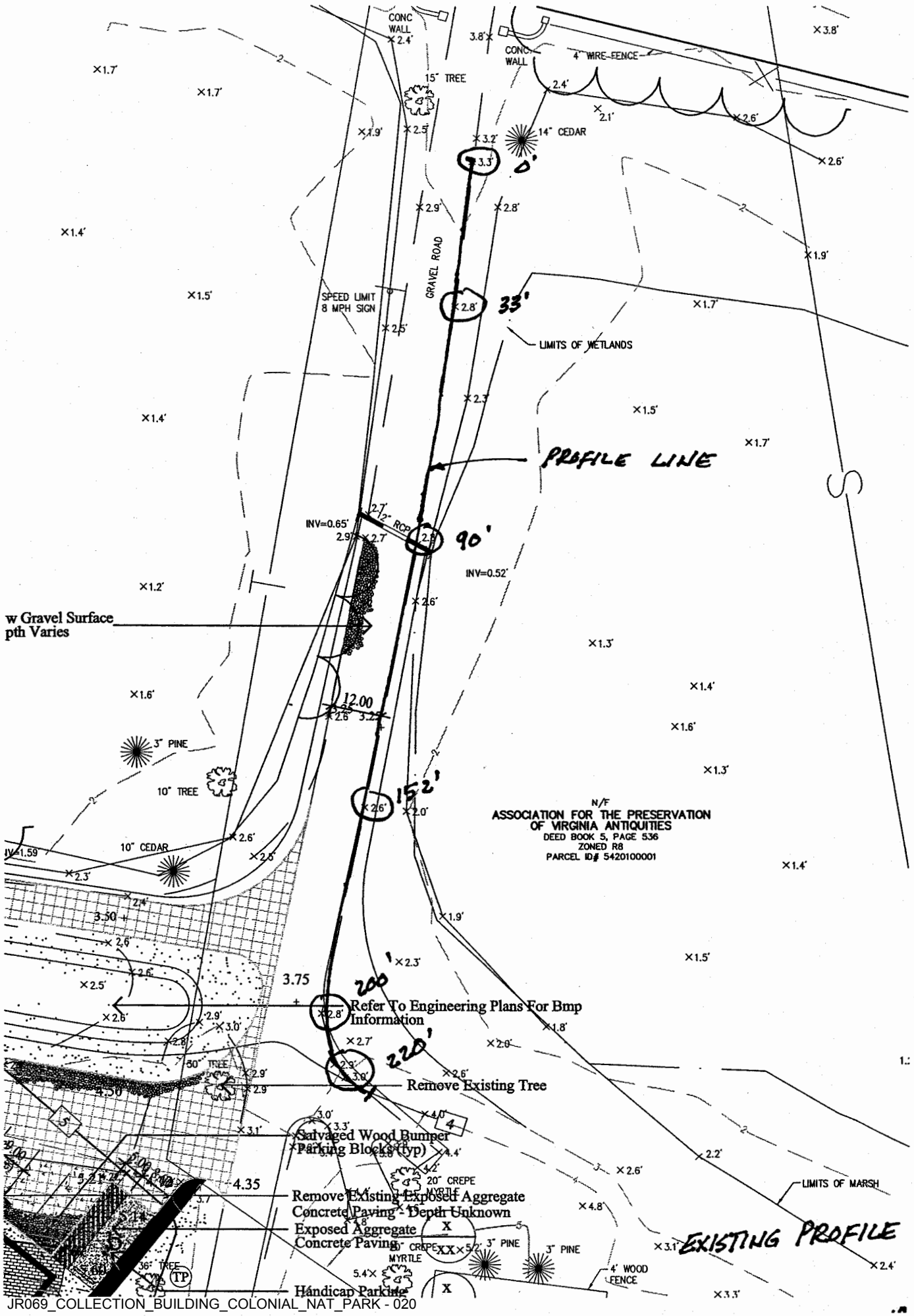

JR069_COLLECTION_BUILDING_COLONIAL_NAT_PARK - 020

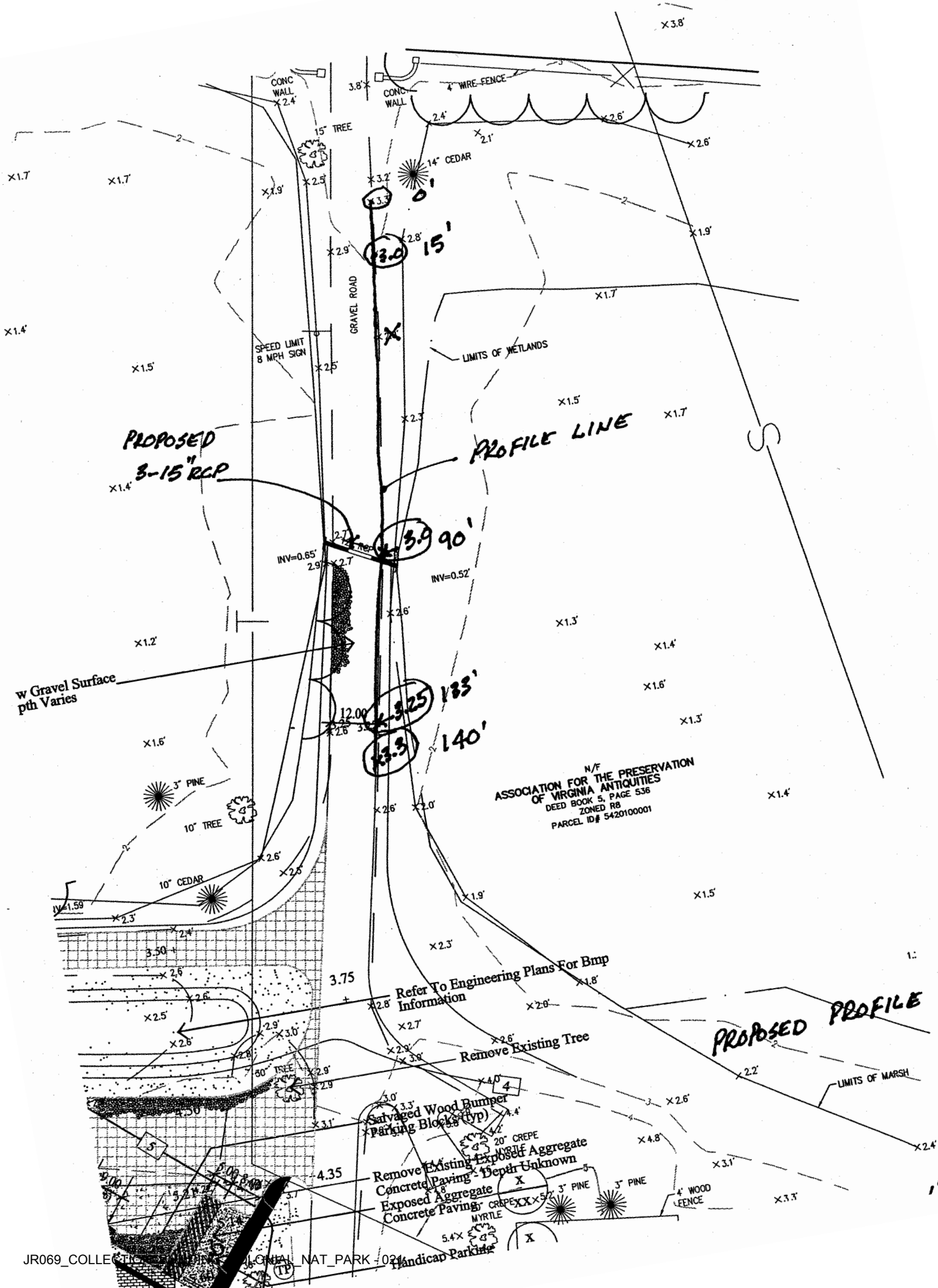

JR069_COLLECTION_NATIONAL_NAT_PARK_021

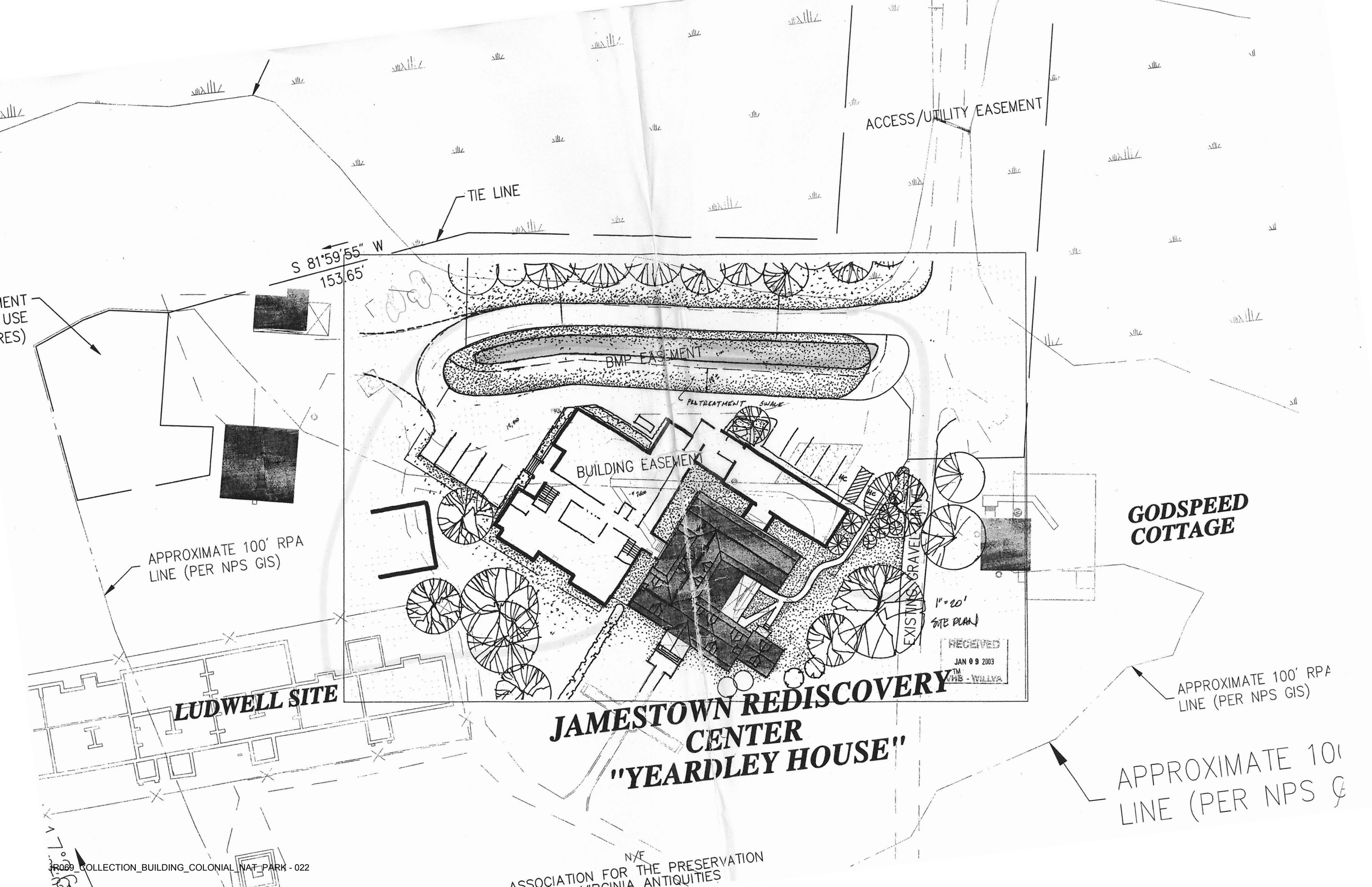

JR069_COLLECTION_BUILDING_COLONIAL_NAT_PARK - 022

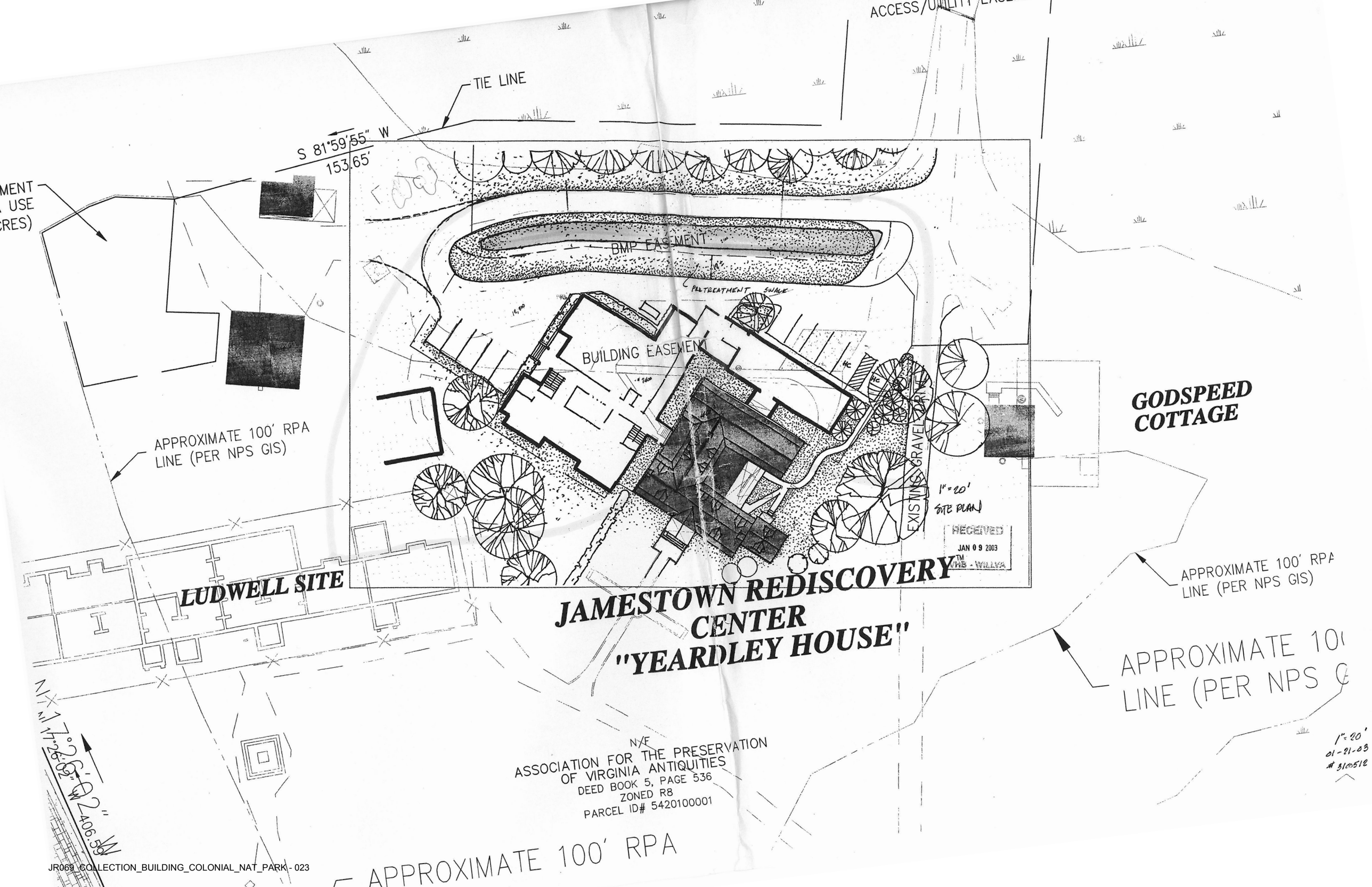

JR069_COLLECTION_BUILDING_COLONIAL_NAT_PARK - 023

8/5/03

VHB **Computations**

Project: "APVA" BMP
Location: JAMESTOWN
Calculated by: LP
Checked by:
Title

Project # 31005.14
Sheet of
Date: 6-12-03
Date:

RIP RAP OUTLET PROTECTION DESIGN:

FOR SYSTEMS A, B & C:

THE MAXIMUM 10 YR. DISCHARGE INTO THE BMP IS 0.74 CFS.
THE MAXIMUM DISCHARGE VELOCITY INTO THE BMP IS 1.62 FPS.

THE MAXIMUM DISCHARGE IS LESS THAN THE MINIMUM SHOWN ON PLATE 3.18-3 FOR DESIGN. THEREFORE, PROVIDE A MINIMAL RIPRAP APRON OF 2 SY OF VDOT CLASS A1 FOR EACH PIPE OUTLET INTO THE BMP. EACH APRON TO BE 3' WIDE x 6' LENGTH.

FOR BMP OUTLET STRUCTURE

THE MAXIMUM 10 YR DISCHARGE FROM THE BMP IS 3.57 CFS

PER PLATE 3.18-3 PROVIDE A RIPRAP APRON OF 5' WIDE x 8' LENGTH VDOT CLASS A1 RIPRAP. (4.5 SY.)

ENTRANCE ROAD CULVERT REPLACEMENT

show on plan

THE MAXIMUM PIPE CAPACITY FOR HW = 3.3 (SEE CULVERT CALC'S) = 24.87 CFS
TRIPLE 15" RCP. EACH PIPE = 8.3 CFS

PER PLAT 3.18-3 PROVIDE A RIPRAP APRON OF 10' WIDE x 10' LENGTH VDOT CLASS A1 RIPRAP. (11.1 SY)

Class 1

4' top
11' bottom
10' length

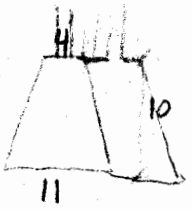

mkgr.forms.humanres.computations.pm65

VHB **Computations**

Project: "APVA" BMP
Location: JAMESTOWN
Calculated by: LP
Checked by:
Title

Project # 31005.14
Sheet of
Date: 6-12-03
Date:

STORM DRAINAGE CALC'S

SYSTEM A: 12" RCP @ WEST END OF BMP

D.A. = 14,000 SF = 0.321 Ac @ C_{avg} = 0.35

BLDG = 700 SF
PAVED = 550 SF } 1250 SF @ C=0.9

OPEN = 12,750 SF @ C=0.30

Tc = 7.0 min. OVERLAND

40'-12" RCP @ 1.0%
Inv = 2.90 Inv = 2.50

SYSTEM B: TWIN 8" PVC @ WEST END OF BMP

D.A. = 6300 SF = 0.145 Ac. @ C_{avg} = 0.52

BLDG = 2050 SF
PAVED = 250 SF } 2300 SF @ C=0.9

OPEN = 4000 SF @ C=0.30

Tc = 5.0 min. OVERLAND

90'- TWIN 8" PVC @ 3.77%
Inv = 5.90 Inv = 2.50

0.072 Ac per pipe for calc. purposes

SYSTEM C: 12" DIP @ MIDDLE OF BMP

D.A = 2725 SF = 0.063 Ac. @ C_{avg} = 0.74

BLDG = 2000 SF @ C=0.90

OPEN = 725 SF @ C=0.30

Tc = 5.0 min. ROOF & OVERLAND

52'-12" DIP @ 2.0%
Inv 5.50 Inv = 3.50

10 YR WS IN BMP = 3.48 ✓

mkgr.forms.humanres.computations.pm65

Hydraflow Storm Sewer Tabulation

Station		Len	Drng Area		Rnoff coeff	Area x C		Tc		Rain (I)	Total flow	Cap full	Vel	Pipe		Invert Elev		HGL Elev		Grnd / Rim Elev		Line ID
Line	To Line	(ft)	Incr (ac)	Total (ac)	(C)	Incr	Total	Inlet (min)	Syst (min)	(in/hr)	(cfs)	(cfs)	(ft/s)	Size (in)	Slope (%)	Up (ft)	Dn (ft)	Up (ft)	Dn (ft)	Up (ft)	Dn (ft)	
1	End	40.0	0.32	0.32	0.35	0.11	0.11	7.0	7.0	6.6	0.74	3.56	1.25	12	1.00	2.90	2.50	3.49	3.48	4.00	4.00	1-2

Project File: System A.stm | IDF File: Norfolk.IDF | Total number of lines: 1 | Run Date: 06-12-2003

NOTES: Intensity = 137.58 / (Inlet time + 18.25) ^ 0.94; Return period = 10 Yrs. ; Initial tailwater elevation = 3.48 (ft)

Hydraflow Hydraulic Grade Line Computations

Line	Size	Q	Downstream								Len	Upstream								Check		JL coeff	Minor loss
	(in)	(cfs)	Invert elev (ft)	HGL elev (ft)	Depth (ft)	Area (sqft)	Vel (ft/s)	Vel head (ft)	EGL elev (ft)	Sf (%)	(ft)	Invert elev (ft)	HGL elev (ft)	Depth (ft)	Area (sqft)	Vel (ft/s)	Vel head (ft)	EGL elev (ft)	Sf (%)	Ave Sf (%)	Enrgy loss (ft)	(K)	(ft)
1	12	0.74	2.50	3.48	0.98	0.78	0.95	0.01	3.49	0.039	40.0	2.90	3.49	0.59	0.48	1.55	0.04	3.52	0.104	0.071	0.029	0.50	0.02

Project File: System A.stm | IDF File: Norfolk.IDF | Total number of lines: 1 | Run Date: 06-12-2003

NOTES: Initial tailwater elevation = 3.48 (ft) , * Normal depth assumed., ** Critical depth assumed., i Under inlet control.

Hydraflow Storm Sewer Tabulation

Station		Len	Drng Area		Rnoff coeff	Area x C		Tc		Rain (I)	Total flow	Cap full	Vel	Pipe		Invert Elev		HGL Elev		Grnd / Rim Elev		Line ID
Line	To Line		Incr	Total		Incr	Total	Inlet	Syst					Size	Slope	Up	Dn	Up	Dn	Up	Dn	
		(ft)	(ac)	(ac)	(C)			(min)	(min)	(in/hr)	(cfs)	(cfs)	(ft/s)	(in)	(%)	(ft)	(ft)	(ft)	(ft)	(ft)	(ft)	
1	End	90.0	0.08	0.08	0.52	0.04	0.04	5.0	5.0	7.1	0.30	2.35	1.62	8	3.78	5.90	2.50	6.16	3.48	7.00	4.00	3-4

Project File: Syatem B.stm | IDF File: Norfolk.IDF | Total number of lines: 1 | Run Date: 06-12-2003

NOTES: Intensity = 137.58 / (Inlet time + 18.25) ^ 0.94; Return period = 10 Yrs. ; Initial tailwater elevation = 3.48 (ft)

Hydraflow Hydraulic Grade Line Computations

Line	Size (in)	Q (cfs)	Downstream Invert elev (ft)	Downstream HGL elev (ft)	Downstream Depth (ft)	Downstream Area (sqft)	Downstream Vel (ft/s)	Downstream Vel head (ft)	Downstream EGL elev (ft)	Downstream Sf (%)	Len (ft)	Upstream Invert elev (ft)	Upstream HGL elev (ft)	Upstream Depth (ft)	Upstream Area (sqft)	Upstream Vel (ft/s)	Upstream Vel head (ft)	Upstream EGL elev (ft)	Upstream Sf (%)	Check Ave Sf (%)	Check Enrgy loss (ft)	JL coeff (K)	Minor loss (ft)
1	8	0.30	2.50	3.48	0.67	0.35	0.85	0.01	3.49	0.061	90.0	5.90	6.16	0.26**	0.12	2.40	0.09	6.25	0.612	0.336	N/A	0.50	0.04

Project File: Syatem B.stm | IDF File: Norfolk.IDF | Total number of lines: 1 | Run Date: 06-12-2003

NOTES: Initial tailwater elevation = 3.48 (ft) , * Normal depth assumed., ** Critical depth assumed., i Under inlet control.

Hydraflow Storm Sewer Tabulation

Station		Len	Drng Area		Rnoff coeff	Area x C		Tc		Rain (I)	Total flow	Cap full	Vel	Pipe		Invert Elev		HGL Elev		Grnd / Rim Elev		Line ID
Line	To Line	(ft)	Incr (ac)	Total (ac)	(C)	Incr	Total	Inlet (min)	Syst (min)	(in/hr)	(cfs)	(cfs)	(ft/s)	Size (in)	Slope (%)	Up (ft)	Dn (ft)	Up (ft)	Dn (ft)	Up (ft)	Dn (ft)	
1	End	52.0	0.06	0.06	0.74	0.05	0.05	5.0	5.0	7.1	0.33	4.94	1.33	12	1.92	3.50	2.50	3.74	3.48	5.75	4.00	5-6

Project File: Syatem C.stm | IDF File: Norfolk.IDF | Total number of lines: 1 | Run Date: 06-12-2003

NOTES: Intensity = 137.58 / (Inlet time + 18.25) ^ 0.94; Return period = 10 Yrs. ; Initial tailwater elevation = 3.48 (ft)

Hydraflow Hydraulic Grade Line Computations

Line	Size	Q	Downstream								Len	Upstream								Check		JL coeff	Minor loss
	(in)	(cfs)	Invert elev (ft)	HGL elev (ft)	Depth (ft)	Area (sqft)	Vel (ft/s)	Vel head (ft)	EGL elev (ft)	Sf (%)	(ft)	Invert elev (ft)	HGL elev (ft)	Depth (ft)	Area (sqft)	Vel (ft/s)	Vel head (ft)	EGL elev (ft)	Sf (%)	Ave Sf (%)	Enrgy loss (ft)	(K)	(ft)
1	12	0.33	2.50	3.48	0.98	0.78	0.43	0.00	3.48	0.008	52.0	3.50	3.74	0.24**	0.15	2.24	0.08	3.82	0.507	0.258	N/A	0.50	0.04

Project File: Syatem C.stm	IDF File: Norfolk.IDF	Total number of lines: 1	Run Date: 06-12-2003

NOTES: Initial tailwater elevation = 3.48 (ft) , * Normal depth assumed., ** Critical depth assumed., i Under inlet control.

✓ 8/5/03

VHB **Computations**

Project: JAMESTOWN
Location:
Calculated by: LP
Checked by:
Title

Project # 31005.14
Sheet of
Date: 4-28-03
Date:

CALCULATE CAPACITY EXIST. 12" RCP CULVERT AND ROAD OVERTOPPING WITH HEADWATER ELEV = 3.3 (MAINTENANCE SHED ELEV.) & CAPACITY PROPOSED TRIPLE 15" RCP CULVERT REPLACEMENT AND REGRADED ROAD. NEGLECT TW EFFECT FOR COMPARISON PURPOSES.

EXIST. 12" RCP CULVERT INV = 0.65 INV = 0.52 30' @ 0.65%
Q_{cap} w/ HW = 3.3 = 5.54 CFS

ROAD OVERTOP @ ELEV. 2.6
Q_{cap} w/ HW = 3.3 = 19.90 CFS

TOTAL Q = 25.4 CFS

PROPOSED TRIPLE 15" RCP INV = 0.65 INV = 0.52 24' @ 0.54%
Q_{cap} w/ HW = 3.3 = 24.87 CFS

ROAD OVERTOP @ ELEV. 3.0
Q_{cap} w/ HW = 3.3 = 3.64 CFS

TOTAL Q = 28.5 CFS ✓ OK

∴ REPLACEMENT CULVERTS & ROAD REGRADING ADEQUATE

Culvert Calculator Report
12" Road Culvert

Solve For: Discharge

Culvert Summary					
Allowable HW Elevation	3.30	ft	Headwater Depth/Height	2.65	
Computed Headwater Elev:	3.30	ft	Discharge	5.54	cfs
Inlet Control HW Elev.	3.30	ft	Tailwater Elevation	0.00	ft
Outlet Control HW Elev.	3.14	ft	Control Type	Inlet Control	

Grades					
Upstream Invert	0.65	ft	Downstream Invert	0.52	ft
Length	20.00	ft	Constructed Slope	0.006500	ft/ft

Hydraulic Profile					
Profile	CompositeM2PressureProfile		Depth, Downstream	0.94	ft
Slope Type	Mild		Normal Depth	N/A	ft
Flow Regime	Subcritical		Critical Depth	0.94	ft
Velocity Downstream	7.23	ft/s	Critical Slope	0.020931	ft/ft

Section					
Section Shape	Circular		Mannings Coefficient	0.013	
Section Material	Concrete		Span	1.00	ft
Section Size	12 inch		Rise	1.00	ft
Number Sections	1				

Outlet Control Properties					
Outlet Control HW Elev.	3.14	ft	Upstream Velocity Head	0.77	ft
Ke	0.50		Entrance Loss	0.39	ft

Inlet Control Properties					
Inlet Control HW Elev.	3.30	ft	Flow Control	N/A	
Inlet Type	Square edge w/headwall		Area Full	0.8	ft^2
K	0.00980		HDS 5 Chart	1	
M	2.00000		HDS 5 Scale	1	
C	0.03980		Equation Form	1	
Y	0.67000				

JR069 COLLECTION BUILDING COLONIAL NAT PARK - 033
© Haestad Methods, Inc.

Culvert Calculator Report
15" Road Culverts

Solve For: Discharge

Culvert Summary					
Allowable HW Elevation	3.30	ft	Headwater Depth/Height	2.12	
Computed Headwater Elev	3.30	ft	Discharge	24.87	cfs
Inlet Control HW Elev.	3.30	ft	Tailwater Elevation	0.00	ft
Outlet Control HW Elev.	3.18	ft	Control Type	Inlet Control	

Grades					
Upstream Invert	0.65	ft	Downstream Invert	0.52	ft
Length	24.00	ft	Constructed Slope	0.005417	ft/ft

Hydraulic Profile					
Profile	CompositeM2PressureProfile		Depth, Downstream	1.13	ft
Slope Type	Mild		Normal Depth	N/A	ft
Flow Regime	Subcritical		Critical Depth	1.13	ft
Velocity Downstream	7.11	ft/s	Critical Slope	0.014467	ft/ft

Section					
Section Shape	Circular		Mannings Coefficient	0.013	
Section Material	Concrete		Span	1.25	ft
Section Size	15 inch		Rise	1.25	ft
Number Sections	3				

Outlet Control Properties					
Outlet Control HW Elev.	3.18	ft	Upstream Velocity Head	0.71	ft
Ke	0.50		Entrance Loss	0.35	ft

Inlet Control Properties					
Inlet Control HW Elev.	3.30	ft	Flow Control	Submerged	
Inlet Type	Square edge w/headwall		Area Full	3.7	ft^2
K	0.00980		HDS 5 Chart	1	
M	2.00000		HDS 5 Scale	1	
C	0.03980		Equation Form	1	
Y	0.67000				

Proposed Road Profile
Worksheet for Irregular Channel

Project Description	
Worksheet	Proposed Road P
Flow Element	Irregular Channel
Method	Manning's Formul
Solve For	Discharge

Input Data		
Slope	000100	ft/ft
Water Surface Elev.	3.30	ft

Options	
Current Roughness Metho	ved Lotter's Method
Open Channel Weighting	ved Lotter's Method
Closed Channel Weightin	Horton's Method

Results		
Mannings Coeffic	0.050	
Elevation Range	.00 to 3.30	
Discharge	3.64	cfs
Flow Area	32.4	ft²
Wetted Perimeter	140.00	ft
Top Width	140.00	ft
Actual Depth	0.30	ft
Critical Elevation	3.04	ft
Critical Slope	0.107653	ft/ft
Velocity	0.11	ft/s
Velocity Head	1.95e-4	ft
Specific Energy	3.30	ft
Froude Number	0.04	
Flow Type	Subcritical	

Roughness Segments

Start Station	End Station	Mannings Coefficient
0+00	1+40	0.050

Natural Channel Points

Station (ft)	Elevation (ft)
0+00	3.30
0+15	3.00
0+90	3.00
1+33	3.25
1+40	3.30

JP069 COLLECTION_BUILDING_COLONIAL_NAT_PARK_085

Existing Road Profile
Worksheet for Irregular Channel

Project Description	
Worksheet	Existing Road Pro
Flow Element	Irregular Channel
Method	Manning's Formul
Solve For	Discharge

Input Data		
Slope	000100	ft/ft
Water Surface Elev	3.30	ft

Options	
Current Roughness Metho	ved Lotter's Method
Open Channel Weighting	ved Lotter's Method
Closed Channel Weightin	Horton's Method

Results		
Mannings Coeffic	0.050	
Elevation Range	.60 to 3.30	
Discharge	19.90	cfs
Flow Area	107.8	ft²
Wetted Perimete	220.01	ft
Top Width	220.00	ft
Actual Depth	0.70	ft
Critical Elevation	2.81	ft
Critical Slope	0.086087	ft/ft
Velocity	0.18	ft/s
Velocity Head	5.3e-4	ft
Specific Energy	3.30	ft
Froude Number	0.05	
Flow Type	Subcritical	

Roughness Segments

Start Station	End Station	Mannings Coefficient
0+00	2+20	0.050

Natural Channel Points

Station (ft)	Elevation (ft)
0+00	3.30
0+33	2.80
0+90	2.80
1+52	2.60
2+00	2.80
2+20	3.30

JR069_COLLECTION_BUILDING_COLONIAL_NAT_PARK - 036

JR 069

VHB Computations

Project: "AVPA" BMP
Location: JAMESTOWN
Calculated by: LP
Checked by:
Title

Project # 31005.14
Sheet of
Date: 4-29-03
Date:

BMP DESIGN SUMMARY

- PROJECT DRAINAGE AREA = 1.09 Ac.
- HYDROLOGIC SOIL GROUP = C
  "TETOTUM SILT LOAM" PER SOIL SURVEY
- USE 'SCS' 24 HOUR TYPE II STORM DISTRIBUTIONS FOR OVERALL BASIN MODELING & ROUTINGS
- JCC 24 HOUR RAINFALL DEPTHS:
  1-YEAR = 2.8"
  2-YEAR = 3.5"
  10-YEAR = 5.8"
- ATTENUATE 1-YEAR, 2-YEAR & 10-YEAR POST DEVELOPMENT DISCHARGES TO EXISTING (PRE-DEVELOPMENT) FLOWS
  ∴ ROUTING SUMMARY:

  -outlets into tidal area - no 1-yr control reqd. (channel prot)

PRE DEVELOPMENT	POST DEVELOPMENT
1 YEAR Q = 2.26 CFS	1 YEAR Q = 0.39 CFS
2 YEAR Q = 3.28 CFS	2 YEAR Q = 1.66 CFS
10 YEAR Q = 6.82 CFS	10 YEAR Q = 3.57 CFS

- BASIN TO BE DESIGNED AS A BIORETENTION / INFILTRATION FACILITY
  ∴ MINIMUM DESIGN FOR BIORETENTION IS WQV EQUAL TO 1.0" PER IMPERVIOUS ACRE WHICH EQUAL 50% EFFICIENCY.
  ∴ BASIN AS DESIGNED WILL TREAT 2.2" PER IMPERVIOUS ACRE WHICH EXCEEDS MINIMUM BY 120%
  ∴ PONDING DEPTH AVERAGE 6"
  MAX DEPTH TO OVERFLOW = 9"

mkgr.forms.humanres.computations.pm65

WORKSHEET B: REDEVELOPMENT (APVA BMP at Yeardley House)

1. Compile site-specific data.

		PRE-DEVELOPMENT		POST-DEVELOPMENT	
A	area	= 1.09	acres	= 1.09	acres
I_a	structures	= 0.05	acres	= 0.20	acres
	parking lot	= 0.31	acres	= 0.23	acres
	roadway	= 0.00	acres	= 0.00	acres
	other	= 0.00	acres	= 0.00	acres
	total I_a =	= 0.36	acres	= 0.43	acres
I	= (total I_a/A) x 100	= 33	% expressed in whole numbers	= 39	% expressed in whole numbers

WHERE:

A = area of site (in acres)

I_a = actual amount of impervious area

2. Calculate the pre-development load (L_{pre}).

L_{pre} = 0.90 lbs/ac/yr *L=45X0.9X[0.05+(0.009XIsite)]X0.26XAX2.72/12*

3. Calculate the post-development load (L_{post}).

L_{post} = 1.05 lbs/ac/yr *L=45X0.9X[0.05+(0.009XIsite)]X0.26XAX2.72/12*

4. Calculate the pollutant removal requirement (RR)

RR = L_{post} - (0.9 xL_{pre})

= 1.05 - .81

= **0.24** **lbs/yr**

If RR < or = 0, **STOP** and submit analysis to this point

If RR > 0, **CONTINUE**

To determine the overall BMP efficiency required (%RR) when selecting BMP options:

%RR = RR/L_{post} x 100

= 0.24 / 1.05 x 100

= **22.84** %

WORKSHEET C: COMPLIANCE (APVA BMP at Yeardley House)

Select BMP options using screening tools and list them below. Then calculate the load removed for each option.

1.

Selected Option	Removal Efficiency (%/100)	x	Fraction of CBPA Drainage Area Served (expressed in decimal form)	x	L_{post} (lbs/yr)	=	Load Removed (lbs/yr)
Std 3.10	0.600	X	1.00	X	1.05		0.63
		X		X			
		X		X			
		X		X			
			Total Pollutants Removed				**0.63**

2 Calculate overall compliance.

Post Developed Pollutants - Pollutants Removed = Net Pollutants Pounds per year

1.05 - 0.63 = 0.42 pounds per year

If total load removed > removal requirement, criteria are satisfied.

0.63 >/= 0.24 therefore the removal requirement has been meet

BMP Options	*Efficiency*
Standard 3.1 Infiltration	
(1) 0.5 in/imp.ac.	50% (Per JCC)
(2) 1.0 in/imp. ac.	60% (Per JCC)

WORKSHEET C: COMPLIANCE (APVA BMP at Yeardley House)

Select BMP options using screening tools and list them below. Then calculate the load removed for each option.

1.

Selected Option	Removal Efficiency (%/100)	x	Fraction of CBPA Drainage Area Served (expressed in decimal form)	x	L_{post} (lbs/yr)	=	Load Removed (lbs/yr)
Std 3.11	0.500	X	1.00	X	1.05		0.53
		X		X			
		X		X			
		X		X			
			Total Pollutants Removed				**0.53**

2 Calculate overall compliance.

Post Developed Pollutants - Pollutants Removed = Net Pollutants Pounds per year

1.05 - 0.53 = 0.53 pounds per year

If total load removed > removal requirement, criteria are satisfied.

0.53 >/= 0.24 therefore the removal requirement has been meet

BMP Options	*Efficiency*
Standard 3.11 Bioretention 1.0 in/imp. ac.	50% (Per JCC)

VHB Computations

Project: "APVA" BMP
Location: YEARDLEY HOUSE
Calculated by: LP
Checked by:
Title

Project # 31005.14
Sheet 1 of
Date: 4-29-03
Date:

EXISTING CONDITIONS:

TOTAL D.A. = 47,500 SF (1.09 Ac.)

BLDGS = 1510 + 650 = 2160 SF = 0.05 Ac.

GRAVEL DRIVE = 11,100 SF
GRAVEL WALKS = 730 SF
BRICK WALK = 840 SF
CONCRETE = 730 SF
} 0.31 Ac.

.36

PROPOSED CONDITIONS:

TOTAL D.A. = 47,500 SF (1.09 Ac.)

BLDGS = 1435 + 6800 + 650 = 8885 SF = 0.20 Ac.

.43

GRAVEL PAVERS = 8160 SF
GRAVEL OVERLAY = 760 SF
CONCRETE = 560 SF
BRICK WALK = 340 SF
} 0.23 Ac.

mkgr.forms.humanres.computations.pm65

Project: "APVA" BMP
Location: YEARDLEY HOUSE
Calculated by: LP
Checked by:
Title

Project # 31005.14
Sheet 2 of
Date: 4-29-03
Date:

INFILTRATION DESIGN.

1.0" PER IMP. ACRE = 65% EFFICIENCY
∴ 1.0" x 0.43 ac. x 43560 = 1561 CF REQ'D WQ VOLUME

PRE TREATMENT = 25% WQV
∴ 1561 CF x 0.25 = 390 CF REQ'D

PRE TREATMENT VOLUME PROVIDED:
GRAVEL PAVE AREA = 8160 SF
40% VR x 8160 SF x 1" DEEP = 274 CF
SEDIMENT SUMP @ PIPE OUTLETS

ELEV.	AREA (SF)	$A_1+A_2/2$	VOL (CF)
2.0	300	0	0
2.5	500	400	200 CF

} 474 CF ✓ OK

BASIN VOLUME:

ELEV.	AREA (SF)	$A_1+A_2/2$	VOL (CF)	Σ VOL (CF)
2.0	2000	0	0	0
2.5	2635	2317	1159	1159
3.0	3270	2952	1476	2635
3.5	4700	3985	1992	4627

mkgr.forms.humanres.computations.pm65

VHB Computations

Project: "AVPA" BMP
Location: YEARDLEY HOUSE
Calculated by: LP
Checked by:
Title

Project # 31005.14
Sheet 3 of
Date: 4-29-03
Date:

INFILTRATION RATE:

ESTIMATED PER SOILS REPORT for soil below the bioret. planting $K = 1\times10^{-3}$ to 1×10^{-4} cm/sec.

1×10^{-4} cm/sec = 0.0010 cm/sec × 118.1102 × 12 = 1.42"/hr.

INFILTRATION DISCHARGE RATE (CFS)

$Q = fISA \div 3600$

f = infiltration rate (FT/HR) = 1.42" ÷ 12 = 0.118 FT/HR

SA = Bottom area = 1700 SF — from PG County

I = Hydraulic gradient = 1

$\therefore Q = (0.118)(1)(1700) \div 3600 = 0.06$ CFS

MAX STORAGE TIME & TRENCH DEPTH:

$d_{max} = \frac{fT}{V_r} = \frac{0.118 \cdot 48}{0.4} = 14'$ - NA

MIN SURFACE AREA:

$SA = \frac{Volume}{fT} = \frac{1561}{0.118 \cdot 48} = 275$ SF

mkgr.forms.humanres.computations.pm65

VHB Computations

Project: "AVPA" BMP
Location:
Calculated by: LP
Checked by:
Title

Project # 31005.14
Sheet 4 of
Date: 4-29-05
Date:

PRE TREATMENT AREA REQ'D FOR PIPE OUTLETS:

12" RCP & TWIN 8" PVC OUTLETS @ WEST END OF BASIN

IMPERVIOUS AREA:

BLDGS = 2750 SF
PAVED = 800 SF
} 3550 SF

WQ VOL = 3550 SF × 1.0" = 296 CF

PRE TREATMENT VOL = 25% × 296 CF = 74 CF

PVC OUTLET @ MIDDLE OF BASIN

IMPERVIOUS AREA:

BLDG = 2000 SF

WQ VOL = 2000 SF × 1.0" = 167 CF

PRE TREATMENT VOL = 25% × 167 CF = 42 CF

mkgr.forms.humanres.computations.pm65

VHB Computations

Project: 'APVA' BMP
Location:
Calculated by: LP
Checked by:
Title

Project # 31005.14
Sheet 5 of
Date: 4-29-03
Date:

BIORETENTION DESIGN:

BASIN SURFACE AREA AT ELEV. 2.0 = 2000 SF

FOR 1" DESIGN: SURFACE AREA = 5.0% IMP. AREA = 65% EFFICIENT
IMPERVIOUS AREA = 18730 SF
∴ 5.0% × 18730 SF = 937 SF MIN.

SURFACE AREA AS % IMPERVIOUS AREA = 2000 ÷ 18730 = 11%
∴ TREATMENT VOLUME = 11 ÷ 5 = 2.2"

mkgr.forms.humanres.computations.pm65

Geotechnical Environmental Testing Laboratories, Inc.

LOG OF BORING No. BMP-1

PROJECT: Proposed NPS Easement at APVA **PROJECT NO.:** VB03-200G
CLIENT: Landmark Design Group
PROJECT LOCATION: James City County, VA
LOCATION: See Attached Location Plan **ELEVATION:**
DRILLER: Atlantic Drilling Services **LOGGED BY:** Allan Mushett, EIT
DRILLING METHOD: Rotary Wash "Mud" Drilling **DATE:** 4/11/03
DEPTH TO - WATER> INITIAL: ▼ .5 **AFTER 24 HOURS:** ▼ **CAVING>** C

EAST

Depth (feet)	Description	Graphic	Sample No.	Blow Counts	% < #200	TEST RESULTS (Plastic Limit ⊢—⊣ Liquid Limit; Water Content - ●; Penetration - ▨; 10 20 30 40 50)
	ELEV 2.5±					
	4 Inches Topsoil (.33)					
	Brown, moist, Silty CLAY (CL), very soft, [impervious]		1	1 1 1		
2	ELEV 0.5± (2)					
	Brown, moist, Silty Fine to Medium SAND (SM), very loose to loose [estimated infiltration rate of k=1x10-3 to 1x10-4 cm /sec]		2	2 3 3		
4						
			3	3 5 6		
6			4	1 3 1		
	Boring terminated at 7 ft.					
8						
10						
12						
14						

This information pertains only to this boring and should not be interpreted as being indicative of the site.

Figure

Geotechnical Environmental Testing Laboratories, Inc.

LOG OF BORING No. BMP-2

PROJECT: Proposed NPS Easement at APVA **PROJECT NO.:** VB03-200G
CLIENT: Landmark Design Group
PROJECT LOCATION: James City County, VA
LOCATION: See Attached Location Plan **ELEVATION:**
DRILLER: Atlantic Drilling Services **LOGGED BY:** Allan Mushett, EIT
DRILLING METHOD: Rotary Wash "Mud" Drilling **DATE:** 4/11/03
DEPTH TO - WATER> INITIAL: ▽ .5 **AFTER 24 HOURS:** ▽ **CAVING>** ⊥

WEST

ELEV 3.0±

Depth (feet)	Description	Graphic	Sample No.	Blow Counts	% < #200
	6 Inches Topsoil				
	.5 Gray, moist, Silty CLAY (CL), very soft to medium stiff [impervious]		1	1 1 1	
2			2	2 3 3	
4	ELEV -1.0± 4 Gray and Brown, moist, Silty Fine to Medium SAND (SM), trace Clay to 6 feet, very loose to medium dense [estimated infiltration rate of k= 1x10-3 to 1x10-4 cm /sec]		3	3 6 6	
6			4	1 3 1	
	Boring terminated at 7 ft.				
8					
10					
12					
14					

TEST RESULTS
Plastic Limit ├──┤ Liquid Limit
Water Content - ●
Penetration - ▨
10 20 30 40 50

This information pertains only to this boring and should not be interpreted as being indicitive of the site.

Figure PAGE 1 of 1

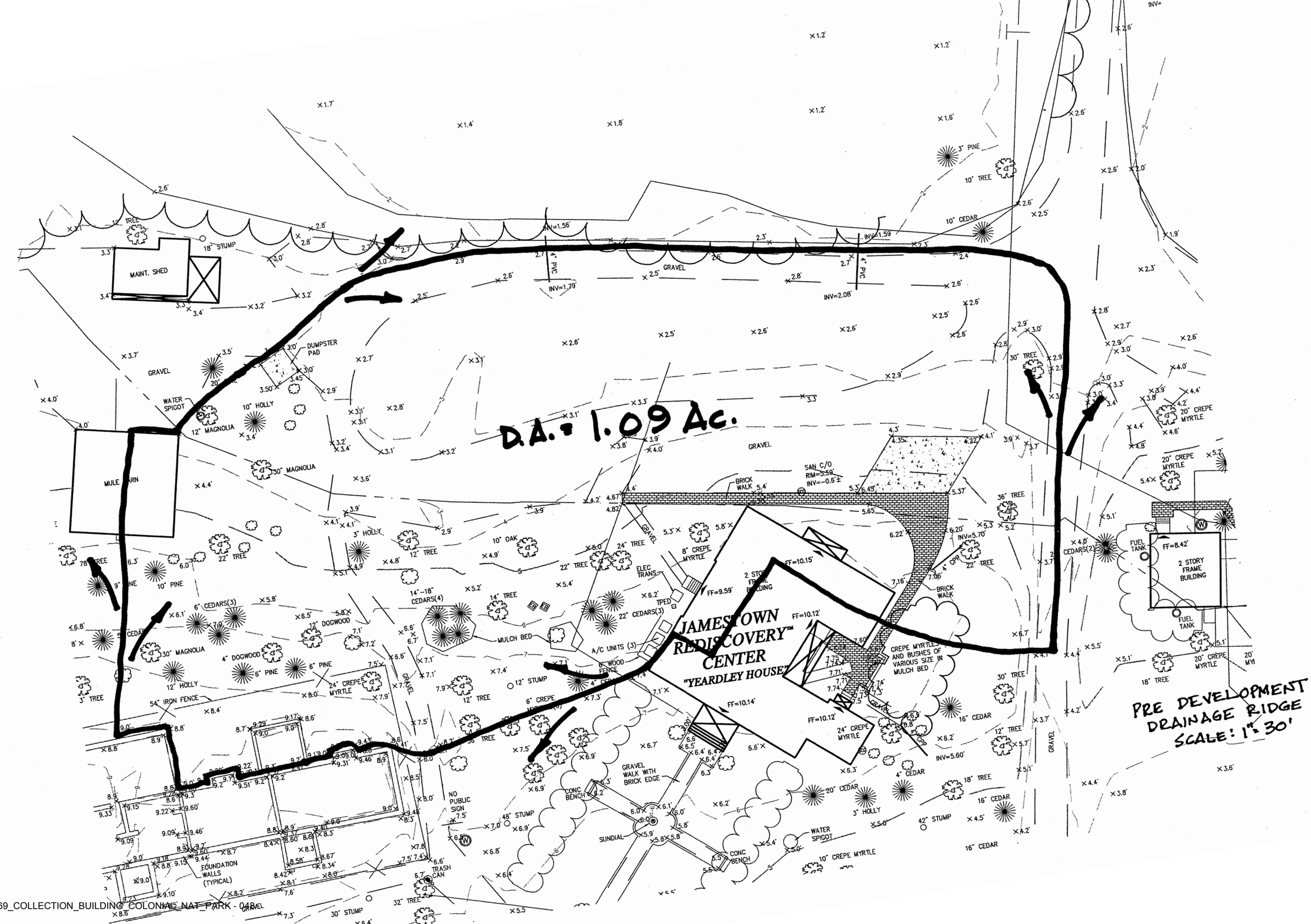

JR069_COLLECTION_BUILDING_COLONIAL_NAT_PARK - 048

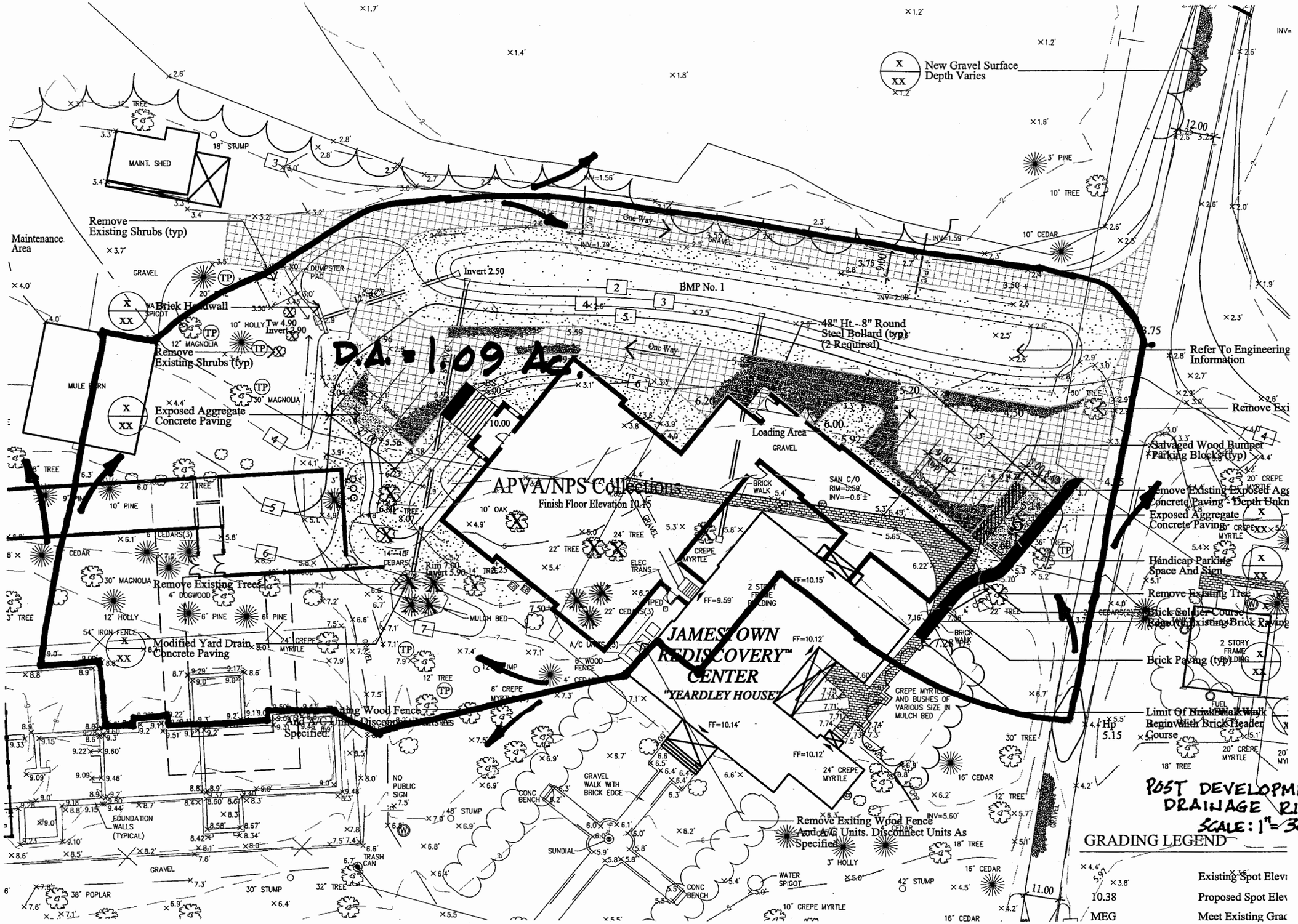
New Gravel Surface
Depth Varies
Maintenance Area
Remove Existing Shrubs (typ)
Brick Headwall
Remove Existing Shrubs (typ)
Exposed Aggregate Concrete Paving
D.A. = 1.09 Ac.
BMP No. 1
Invert 2.50
48" Ht. - 8" Round Steel Bollard (typ) (2 Required)
Refer To Engineering Information
Remove Exi
Salvaged Wood Bumper Parking Blocks (typ)
Loading Area
APVA/NPS Collections
Finish Floor Elevation 10.15
Remove Existing Exposed Agg Concrete Paving - Depth Unkn
Exposed Aggregate Concrete Paving
Handicap Parking Space And Sign
Remove Existing Tree
Brick Soldier Course Edge (typ) Existing Brick Paving
Brick Paving (typ)
Limit Of Brick Walk Begin With Brick Header Course
Remove Existing Trees
Modified Yard Drain Concrete Paving
Remove Existing Wood Fence And A/C Units. Disconnect Units As Specified.
JAMESTOWN REDISCOVERY™ CENTER "YEARDLEY HOUSE"
Remove Exiting Wood Fence And A/C Units. Disconnect Units As Specified
POST DEVELOPMENT DRAINAGE RIDGE
SCALE: 1" = 30'
GRADING LEGEND
Existing Spot Elev
Proposed Spot Elev
Meet Existing Grad
MEG

Stage-Area-Storage for Pond 1P: Infiltration basin

Elevation (feet)	Surface (sq-ft)	Storage (cubic-feet)
2.00	1,700	0
2.02	1,737	43
2.04	1,775	87
2.06	1,812	130
2.08	1,850	173
2.10	1,887	217
2.12	1,924	260
2.14	1,962	303
2.16	1,999	347
2.18	2,037	390
2.20	2,074	433
2.22	2,111	477
2.24	2,149	520
2.26	2,186	564
2.28	2,224	607
2.30	2,261	650
2.32	2,298	694
2.34	2,336	737
2.36	2,373	780
2.38	2,411	824
2.40	2,448	867
2.42	2,485	910
2.44	2,523	954
2.46	2,560	997
2.48	2,598	1,040
2.50	2,635	1,084
2.52	2,660	1,143
2.54	2,686	1,202
2.56	2,711	1,261
2.58	2,737	1,320
2.60	2,762	1,379
2.62	2,787	1,438
2.64	2,813	1,497
2.66	2,838	1,556
2.68	2,864	1,615
2.70	2,889	1,674
2.72	2,914	1,733
2.74	2,940	1,792
2.76	2,965	1,851
2.78	2,991	1,910
2.80	3,016	1,969
2.82	3,041	2,029
2.84	3,067	2,088
2.86	3,092	2,147
2.88	3,118	2,206
2.90	3,143	2,265
2.92	3,168	2,324
2.94	3,194	2,383
2.96	3,219	2,442
2.98	3,245	2,501
3.00	3,270	2,560
3.02	3,327	2,640
3.04	3,384	2,719
3.06	3,442	2,799
3.08	3,499	2,879
3.10	3,556	2,958
3.12	3,613	3,038
3.14	3,670	3,118
3.16	3,728	3,198
3.18	3,785	3,277
3.20	3,842	3,357
3.22	3,899	3,437
3.24	3,956	3,516
3.26	4,014	3,596
3.28	4,071	3,676
3.30	4,128	3,755
3.32	4,185	3,835
3.34	4,242	3,915
3.36	4,300	3,995
3.38	4,357	4,074
3.40	4,414	4,154
3.42	4,471	4,234
3.44	4,528	4,313
3.46	4,586	4,393
3.48	4,643	4,473
3.50	**4,700**	**4,552**

REQ'D WQV = 1561 CF

Stage-Discharge for Pond 1P: Infiltration basin

Elevation (feet)	Discharge (cfs)	Discarded (cfs)	Primary (cfs)
2.00	0.00	**0.00**	0.00
2.02	0.06	**0.06**	0.00
2.04	0.06	0.06	0.00
2.06	0.06	0.06	0.00
2.08	0.06	0.06	0.00
2.10	0.06	0.06	0.00
2.12	0.06	0.06	0.00
2.14	0.06	0.06	0.00
2.16	0.06	0.06	0.00
2.18	0.06	0.06	0.00
2.20	0.06	0.06	0.00
2.22	0.06	0.06	0.00
2.24	0.06	0.06	0.00
2.26	0.06	0.06	0.00
2.28	0.06	0.06	0.00
2.30	0.06	0.06	0.00
2.32	0.06	0.06	0.00
2.34	0.06	0.06	0.00
2.36	0.06	0.06	0.00
2.38	0.06	0.06	0.00
2.40	0.06	0.06	0.00
2.42	0.06	0.06	0.00
2.44	0.06	0.06	0.00
2.46	0.06	0.06	0.00
2.48	0.06	0.06	0.00
2.50	0.06	0.06	0.00
2.52	0.06	0.06	0.00
2.54	0.06	0.06	0.00
2.56	0.06	0.06	0.00
2.58	0.06	0.06	0.00
2.60	0.06	0.06	0.00
2.62	0.06	0.06	0.00
2.64	0.06	0.06	0.00
2.66	0.06	0.06	0.00
2.68	0.06	0.06	0.00
2.70	0.06	0.06	0.00
2.72	0.06	0.06	0.00
2.74	0.06	0.06	0.00
2.76	0.07	0.06	0.01
2.78	0.13	0.06	0.07
2.80	0.21	0.06	0.15
2.82	0.30	0.06	0.24
2.84	0.41	0.06	0.35
2.86	0.54	0.06	0.48
2.88	0.67	0.06	0.61
2.90	0.82	0.06	0.76
2.92	0.98	0.06	0.92
2.94	1.14	0.06	1.08
2.96	1.32	0.06	1.26
2.98	1.50	0.06	1.44
3.00	1.69	0.06	1.63
3.02	1.90	0.06	1.84
3.04	2.10	0.06	2.04
3.06	2.32	0.06	2.26
3.08	2.54	0.06	2.48
3.10	2.77	0.06	2.71
3.12	3.00	0.06	2.94
3.14	3.15	0.06	3.09
3.16	3.18	0.06	3.12
3.18	3.21	0.06	3.15
3.20	3.23	0.06	3.17
3.22	3.26	0.06	3.20
3.24	3.28	0.06	3.22
3.26	3.31	0.06	3.25
3.28	3.33	0.06	3.27
3.30	3.36	0.06	3.30
3.32	3.38	0.06	3.32
3.34	3.40	0.06	3.34
3.36	3.43	0.06	3.37
3.38	3.45	0.06	3.39
3.40	3.48	0.06	3.42
3.42	3.50	0.06	3.44
3.44	3.52	0.06	3.46
3.46	3.55	0.06	3.49
3.48	3.57	0.06	3.51
3.50	**3.59**	0.06	**3.53**

Hydrograph for Pond 1P: Infiltration basin

Time (hours)	Inflow (cfs)	Storage (cubic-feet)	Elevation (feet)	Outflow (cfs)	Discarded (cfs)	Primary (cfs)	
5.00	0.00	0	2.00	0.00	0.00	0.00	
6.00	0.00	2	2.00	0.00	0.00	0.00	
7.00	0.02	8	2.00	0.01	0.01	0.00	
8.00	0.03	15	2.01	0.03	0.03	0.00	
9.00	0.06	30	2.01	0.06	**0.06**	0.00	
10.00	0.10	91	2.04	0.06	**0.06**	0.00	
11.00	0.22	420	2.19	0.06	0.06	0.00	
12.00	**6.81**	**3,979**	**3.36**	**3.42**	0.06	**3.36**	
13.00	0.38	**2,092**	**2.84**	**0.42**	0.06	**0.36**	
14.00	0.22	1,993	2.81	0.24	0.06	0.18	
15.00	0.18	1,954	2.79	0.18	0.06	0.12	
16.00	0.14	1,924	2.78	0.15	0.06	0.09	
17.00	0.12	1,907	2.78	0.12	0.06	0.06	
18.00	0.11	1,893	2.77	0.11	0.06	0.05	
19.00	0.09	1,878	2.77	0.10	0.06	0.04	
20.00	0.08	1,864	2.76	0.08	0.06	0.02	
21.00	0.07	1,851	2.76	0.08	0.06	0.02	
22.00	0.07	1,845	2.76	0.07	0.06	0.01	
23.00	0.07	1,839	2.76	0.07	0.06	0.01	
24.00	0.07	1,834	2.75	0.07	0.06	0.01	
25.00	0.00	1,641	2.69	0.06	0.06	0.00	
26.00	0.00	1,425	2.62	0.06	0.06	0.00	
27.00	0.00	1,209	2.54	0.06	0.06	0.00	
28.00	0.00	993	2.46	0.06	0.06	0.00	
29.00	0.00	777	2.36	0.06	0.06	0.00	
30.00	0.00	561	2.26	0.06	0.06	0.00	
31.00	0.00	345	2.16	0.06	0.06	0.00	
32.00	0.00	129	2.06	0.06	0.06	0.00	32 HR. DRAWDOWN
33.00	0.00	1	2.00	0.00	0.00	0.00	
34.00	0.00	0	2.00	0.00	0.00	0.00	
35.00	0.00	0	2.00	0.00	0.00	0.00	
36.00	0.00	0	2.00	0.00	0.00	0.00	
37.00	0.00	0	2.00	0.00	0.00	0.00	
38.00	0.00	0	2.00	0.00	0.00	0.00	
39.00	0.00	0	2.00	0.00	0.00	0.00	
40.00	0.00	0	2.00	0.00	0.00	0.00	
41.00	0.00	0	2.00	0.00	0.00	0.00	
42.00	0.00	0	2.00	0.00	0.00	0.00	
43.00	0.00	0	2.00	0.00	0.00	0.00	
44.00	0.00	0	2.00	0.00	0.00	0.00	
45.00	0.00	0	2.00	0.00	0.00	0.00	
46.00	0.00	0	2.00	0.00	0.00	0.00	
47.00	0.00	0	2.00	0.00	0.00	0.00	
48.00	0.00	0	2.00	0.00	0.00	0.00	

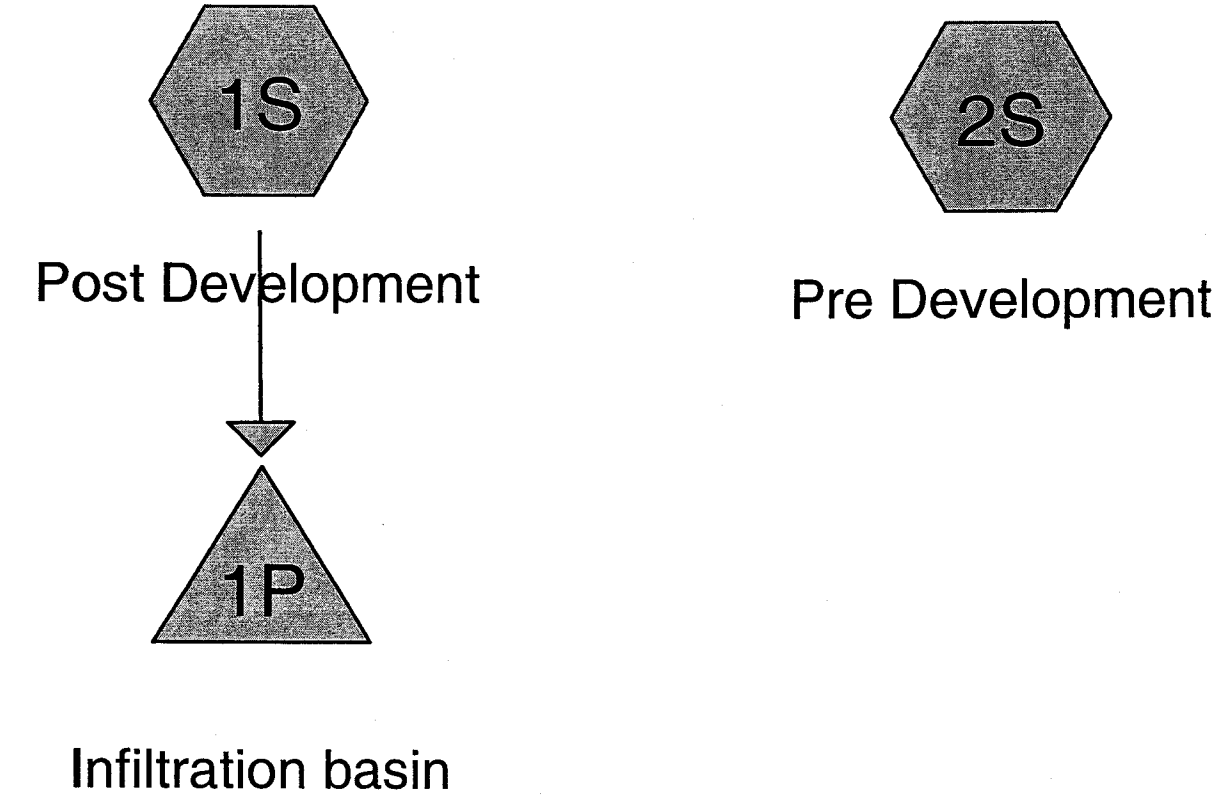

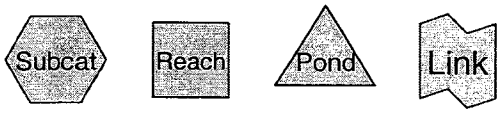

Drainage Diagram for Rediscovery Center
Prepared by VHB,Inc. 4/29/2003
HydroCAD® 6.20 s/n 001238 © 1986-2003 Applied Microcomputer Systems

Time span=5.00-48.00 hrs, dt=0.05 hrs, 861 points
Runoff by SCS TR-20 method, UH=SCS
Reach routing by Stor-Ind+Trans method - Pond routing by Stor-Ind method

Subcatchment 1S: Post Development Runoff Area=1.090 ac Runoff Depth=1.29"
Tc=7.0 min CN=83 Runoff=2.38 cfs 0.117 af

Subcatchment 2S: Pre Development Runoff Area=1.090 ac Runoff Depth=1.22"
Tc=7.0 min CN=82 Runoff=2.26 cfs 0.111 af

Pond 1P: Infiltration basin Peak Elev=2.84' Storage=2,076 cf Inflow=2.38 cfs 0.117 af
Discarded=0.06 cfs 0.092 af Primary=0.33 cfs 0.025 af Outflow=0.39 cfs 0.117 af

Total Runoff Area = 2.180 ac Runoff Volume = 0.228 af Average Runoff Depth = 1.26"

Subcatchment 1S: Post Development

Runoff = 2.38 cfs @ 11.99 hrs, Volume= 0.117 af, Depth= 1.29"

Runoff by SCS TR-20 method, UH=SCS, Time Span= 5.00-48.00 hrs, dt= 0.05 hrs
Type II 24-hr 1yr Rainfall=2.80"

Area (ac)	CN	Description
0.430	98	Bldgs & paved
0.660	74	Open/grassed 'C' soils
1.090	83	Weighted Average

Tc (min)	Length (feet)	Slope (ft/ft)	Velocity (ft/sec)	Capacity (cfs)	Description
7.0					**Direct Entry, Roof & overland to basin**

Subcatchment 2S: Pre Development

Runoff = 2.26 cfs @ 11.99 hrs, Volume= 0.111 af, Depth= 1.22"

Runoff by SCS TR-20 method, UH=SCS, Time Span= 5.00-48.00 hrs, dt= 0.05 hrs
Type II 24-hr 1yr Rainfall=2.80"

Area (ac)	CN	Description
0.360	98	Bldgs & paved
0.730	74	Open/grassed 'C' soils
1.090	82	Weighted Average

Tc (min)	Length (feet)	Slope (ft/ft)	Velocity (ft/sec)	Capacity (cfs)	Description
7.0					**Direct Entry, Overland**

Pond 1P: Infiltration basin

Inflow Area = 1.090 ac, Inflow Depth = 1.29"
Inflow = 2.38 cfs @ 11.99 hrs, Volume= 0.117 af
Outflow = 0.39 cfs @ 12.24 hrs, Volume= 0.117 af, Atten= 84%, Lag= 15.2 min
Discarded = 0.06 cfs @ 11.40 hrs, Volume= 0.092 af
Primary = 0.33 cfs @ 12.24 hrs, Volume= 0.025 af

Routing by Stor-Ind method, Time Span= 5.00-48.00 hrs, dt= 0.05 hrs

Peak Elev= 2.84' @ 12.24 hrs Surf.Area= 3,062 sf Storage= 2,076 cf
Plug-Flow detention time= 273.1 min calculated for 0.117 af (100% of inflow)
Center-of-Mass det. time= 273.0 min (1,110.1 - 837.1)
Storage determined by Prismatic sections

Elevation (feet)	Surf.Area (sq-ft)	Inc.Store (cubic-feet)	Cum.Store (cubic-feet)
2.00	1,700	0	0
2.50	2,635	1,084	1,084
3.00	3,270	1,476	2,560
3.50	4,700	1,993	4,553

Discarded OutFlow Max=0.06 cfs @ 11.40 hrs HW=2.02' (Free Discharge)
└─**3=Infiltration** (Exfiltration Controls 0.06 cfs)

Primary OutFlow Max=0.33 cfs @ 12.24 hrs HW=2.84' (Free Discharge)
└─**1=Culvert** (Passes 0.33 cfs of 2.60 cfs capacity)
└─**2=Orifice/Grate** (Weir Controls 0.33 cfs @ 0.4 fps)

#	Routing	Invert	Outlet Devices
1	Primary	1.70'	**6.0" x 20.0' long Culvert X 3.00** Box, headwall w/3 square edges, Ke= 0.500 Outlet Invert= 1.60' S= 0.0050 '/' n= 0.010 Cc= 0.900
2	Device 1	2.75'	**2.50' x 2.50' Horiz. Orifice/Grate X 0.40** Limited to weir flow C= 0.600
3	Discarded	0.00'	**0.06 cfs Infiltration at all elevations**

Time span=5.00-48.00 hrs, dt=0.05 hrs, 861 points
Runoff by SCS TR-20 method, UH=SCS
Reach routing by Stor-Ind+Trans method - Pond routing by Stor-Ind method

Subcatchment 1S: Post Development Runoff Area=1.090 ac Runoff Depth=1.86"
Tc=7.0 min CN=83 Runoff=3.41 cfs 0.169 af

Subcatchment 2S: Pre Development Runoff Area=1.090 ac Runoff Depth=1.78"
Tc=7.0 min CN=82 Runoff=3.28 cfs 0.162 af

Pond 1P: Infiltration basin Peak Elev=3.00' Storage=2,550 cf Inflow=3.41 cfs 0.169 af
Discarded=0.06 cfs 0.103 af Primary=1.60 cfs 0.066 af Outflow=1.66 cfs 0.169 af

Total Runoff Area = 2.180 ac Runoff Volume = 0.331 af Average Runoff Depth = 1.82"

Subcatchment 1S: Post Development

Runoff = 3.41 cfs @ 11.98 hrs, Volume= 0.169 af, Depth= 1.86"

Runoff by SCS TR-20 method, UH=SCS, Time Span= 5.00-48.00 hrs, dt= 0.05 hrs
Type II 24-hr 2yr Rainfall=3.50"

Area (ac)	CN	Description
0.430	98	Bldgs & paved
0.660	74	Open/grassed 'C' soils
1.090	83	Weighted Average

Tc (min)	Length (feet)	Slope (ft/ft)	Velocity (ft/sec)	Capacity (cfs)	Description
7.0					**Direct Entry, Roof & overland to basin**

Subcatchment 2S: Pre Development

Runoff = 3.28 cfs @ 11.98 hrs, Volume= 0.162 af, Depth= 1.78"

Runoff by SCS TR-20 method, UH=SCS, Time Span= 5.00-48.00 hrs, dt= 0.05 hrs
Type II 24-hr 2yr Rainfall=3.50"

Area (ac)	CN	Description
0.360	98	Bldgs & paved
0.730	74	Open/grassed 'C' soils
1.090	82	Weighted Average

Tc (min)	Length (feet)	Slope (ft/ft)	Velocity (ft/sec)	Capacity (cfs)	Description
7.0					**Direct Entry, Overland**

Pond 1P: Infiltration basin

Inflow Area = 1.090 ac, Inflow Depth = 1.86"
Inflow = 3.41 cfs @ 11.98 hrs, Volume= 0.169 af
Outflow = 1.66 cfs @ 12.10 hrs, Volume= 0.169 af, Atten= 51%, Lag= 6.7 min
Discarded = 0.06 cfs @ 10.95 hrs, Volume= 0.103 af
Primary = 1.60 cfs @ 12.10 hrs, Volume= 0.066 af

Routing by Stor-Ind method, Time Span= 5.00-48.00 hrs, dt= 0.05 hrs

Peak Elev= 3.00' @ 12.10 hrs Surf.Area= 3,266 sf Storage= 2,550 cf
Plug-Flow detention time= 219.8 min calculated for 0.169 af (100% of inflow)
Center-of-Mass det. time= 219.7 min (1,046.2 - 826.6)
Storage determined by Prismatic sections

Elevation (feet)	Surf.Area (sq-ft)	Inc.Store (cubic-feet)	Cum.Store (cubic-feet)
2.00	1,700	0	0
2.50	2,635	1,084	1,084
3.00	3,270	1,476	2,560
3.50	4,700	1,993	4,553

Discarded OutFlow Max=0.06 cfs @ 10.95 hrs HW=2.02' (Free Discharge)
└─**3=Infiltration** (Exfiltration Controls 0.06 cfs)

Primary OutFlow Max=1.59 cfs @ 12.10 hrs HW=3.00' (Free Discharge)
└─**1=Culvert** (Passes 1.59 cfs of 2.87 cfs capacity)
  └─**2=Orifice/Grate** (Weir Controls 1.59 cfs @ 0.6 fps)

#	Routing	Invert	Outlet Devices
1	Primary	1.70'	**6.0" x 20.0' long Culvert X 3.00** Box, headwall w/3 square edges, Ke= 0.500 Outlet Invert= 1.60' S= 0.0050 '/' n= 0.010 Cc= 0.900
2	Device 1	2.75'	**2.50' x 2.50' Horiz. Orifice/Grate X 0.40** Limited to weir flow C= 0.600
3	Discarded	0.00'	**0.06 cfs Infiltration at all elevations**

Time span=5.00-48.00 hrs, dt=0.05 hrs, 861 points
Runoff by SCS TR-20 method, UH=SCS
Reach routing by Stor-Ind+Trans method - Pond routing by Stor-Ind method

Subcatchment 1S: Post Development Runoff Area=1.090 ac Runoff Depth=3.91"
Tc=7.0 min CN=83 Runoff=6.97 cfs 0.355 af

Subcatchment 2S: Pre Development Runoff Area=1.090 ac Runoff Depth=3.80"
Tc=7.0 min CN=82 Runoff=6.82 cfs 0.345 af

Pond 1P: Infiltration basin Peak Elev=3.48' Storage=4,465 cf Inflow=6.97 cfs 0.355 af
Discarded=0.06 cfs 0.123 af Primary=3.51 cfs 0.232 af Outflow=3.57 cfs 0.355 af

Total Runoff Area = 2.180 ac Runoff Volume = 0.700 af Average Runoff Depth = 3.85"

Subcatchment 1S: Post Development

Runoff = 6.97 cfs @ 11.98 hrs, Volume= 0.355 af, Depth= 3.91"

Runoff by SCS TR-20 method, UH=SCS, Time Span= 5.00-48.00 hrs, dt= 0.05 hrs
Type II 24-hr 10yr Rainfall=5.80"

Area (ac)	CN	Description
0.430	98	Bldgs & paved
0.660	74	Open/grassed 'C' soils
1.090	83	Weighted Average

Tc (min)	Length (feet)	Slope (ft/ft)	Velocity (ft/sec)	Capacity (cfs)	Description
7.0					**Direct Entry, Roof & overland to basin**

Subcatchment 2S: Pre Development

Runoff = 6.82 cfs @ 11.98 hrs, Volume= 0.345 af, Depth= 3.80"

Runoff by SCS TR-20 method, UH=SCS, Time Span= 5.00-48.00 hrs, dt= 0.05 hrs
Type II 24-hr 10yr Rainfall=5.80"

Area (ac)	CN	Description
0.360	98	Bldgs & paved
0.730	74	Open/grassed 'C' soils
1.090	82	Weighted Average

Tc (min)	Length (feet)	Slope (ft/ft)	Velocity (ft/sec)	Capacity (cfs)	Description
7.0					**Direct Entry, Overland**

Pond 1P: Infiltration basin

Inflow Area = 1.090 ac, Inflow Depth = 3.91"
Inflow = 6.97 cfs @ 11.98 hrs, Volume= 0.355 af
Outflow = 3.57 cfs @ 12.08 hrs, Volume= 0.355 af, Atten= 49%, Lag= 6.1 min
Discarded = 0.06 cfs @ 9.15 hrs, Volume= 0.123 af
Primary = 3.51 cfs @ 12.08 hrs, Volume= 0.232 af

Routing by Stor-Ind method, Time Span= 5.00-48.00 hrs, dt= 0.05 hrs

Peak Elev= 3.48' @ 12.08 hrs Surf.Area= 4,637 sf Storage= 4,465 cf
Plug-Flow detention time= 128.6 min calculated for 0.354 af (100% of inflow)
Center-of-Mass det. time= 129.1 min (934.5 - 805.4)
Storage determined by Prismatic sections

Elevation (feet)	Surf.Area (sq-ft)	Inc.Store (cubic-feet)	Cum.Store (cubic-feet)
2.00	1,700	0	0
2.50	2,635	1,084	1,084
3.00	3,270	1,476	2,560
3.50	4,700	1,993	4,553

Discarded OutFlow Max=0.06 cfs @ 9.15 hrs HW=2.02' (Free Discharge)
└─**3=Infiltration** (Exfiltration Controls 0.06 cfs)

Primary OutFlow Max=3.50 cfs @ 12.08 hrs HW=3.47' (Free Discharge)
└─**1=Culvert** (Inlet Controls 3.50 cfs @ 5.9 fps)
└─**2=Orifice/Grate** (Passes 3.50 cfs of 7.99 cfs capacity)

#	Routing	Invert	Outlet Devices
1	Primary	1.70'	**6.0" x 20.0' long Culvert X 3.00** Box, headwall w/3 square edges, Ke= 0.500 Outlet Invert= 1.60' S= 0.0050 '/' n= 0.010 Cc= 0.900
2	Device 1	2.75'	**2.50' x 2.50' Horiz. Orifice/Grate X 0.40** Limited to weir flow C= 0.600
3	Discarded	0.00'	**0.06 cfs Infiltration at all elevations**

VHB **Computations**

Project: "APVA" BMP
Project # 3100510 (02000)
Location: JAMESTOWN
Sheet of
Calculated by: LP
Date: 1-21-03
Checked by:
Date:
Title BIORETENTION & INFILTRATION - PRELIMINARY DESIGN

PROPOSED CONDITIONS:

EXISTING BLDG = 1450 SF
PROPOSED BLDG = 7400 SF
GRAVEL/PAVED = 12500 SF

} 21,350 SF IMPERVIOUS AREA = 0.49 Ac.

INFILTRATION DESIGN:

- 0.5" PER IMP. ACRE (50% EFFICIENCY)
  = 0.5" × 21,350 SF = 897 => 900 CF

- 1.0" PER IMP. ACRE (65% EFFICIENCY)
  = 1.0" × 21,350 SF = 1772 => 1800 CF

BASIN SURFACE AREA = 2100 SF
AVAILABLE VOLUME = 2100 SF × 1.5' STONE × 40% VOID RATIO
= 1260 CF = 0.7" TREATMENT (55% EFFICIENCY)

BIORETENTION DESIGN:

- 0.5" = 2.5% IMP. AREA (50% EFFICIENCY)
  = 2.5% × 21,350 SF = 534 SF SURFACE AREA

- 1.0" = 5.0% IMP AREA (65% EFFICIENCY)
  = 5.0% × 21,350 SF = 1068 SF SURFACE AREA

BASIN SURFACE AREA = 2100 SF
2100 SF ÷ 21,350 SF = 10% = 2.0" TREATMENT

VHB *Computations*

Project:		Project #	
Location:		Sheet	of
Calculated by:		Date:	
Checked by:		Date:	
Title			

EXISTING CONDITIONS:

EXIST. BLDG = 1500 SF
EXIST. GRAVEL/PAVED = 13,200 SF
} 14,700 SF IMPERVIOUS AREA

PROJECT AREA = 42,000 SF = 0.96 ACRES

BMP EASEMENT = 0.16 ACRES

WORKSHEET B: REDEVELOPMENT (APVA BMP at Yeardley House)

1. Compile site-specific data.

		PRE-DEVELOPMENT		POST-DEVELOPMENT	
A	area	= 0.96	acres	= 0.96	acres
I_a	structures	= 0.03	acres	= 0.20	acres
	parking lot	= 0.30	acres	= 0.29	acres
	roadway	= 0.00	acres	= 0.00	acres
	other	= 0.00	acres	= 0.00	acres
	total I_a =	= 0.33	acres	= 0.49	acres
I	= (total I_a/A) x 100	= 34	% expressed in whole numbers	= 51	% expressed in whole numbers

WHERE:

A = area of site (in acres)

I_a = actual amount of impervious area

2. Calculate the pre-development load (L_{pre}).

L_{pre} = 0.82 lbs/ac/yr *L=45X0.9X[0.05+(0.009XIsite)]X0.26XAX2.72/12*

3. Calculate the post-development load (L_{post}).

L_{post} = 1.17 lbs/ac/yr *L=45X0.9X[0.05+(0.009XIsite)]X0.26XAX2.72/12*

4. Calculate the pollutant removal requirement (RR)

RR = L_{post} - (0.9 xL_{pre})

= 1.17 - .74

= **0.43** **lbs/yr**

If RR < or = 0, **STOP** and submit analysis to this point

If RR > 0, **CONTINUE**

To determine the overall BMP efficiency required (%RR) when selecting BMP options:

%RR = RR/L_{post} x 100

= 0.43 / 1.17 x 100

= **36.50** %

DEVELOPMENT MANAGEMENT

101-E MOUNTS BAY ROAD, P.O. BOX 8784, WILLIAMSBURG, VIRGINIA 23187-8784
(757) 253-6671 Fax: (757) 259-4032 E-MAIL: devtman@james-city.va.us

ENVIRONMENTAL DIVISION (757) 253-6670 environ@james-city.va.us
PLANNING (757) 253-6685 planning@james-city.va.us
COUNTY ENGINEER (757) 253-6678
MOSQUITO CONTROL (757) 259-4116

January 27, 2006

Mr. Andy Zajac, Superintendent
J&J Contractors, Inc.
175 Cabot Street, Suite 440
Lowell, MA 01854

Re: BMP at Jamestown Historical Park
Collections Building

Dear Mr. Zajac:

Our Division has received a recording drawing (asbuilt) dated July 11, 2005 and a construction certification dated September 7, 2005 for the BMP at the above referenced site. This completes all required submittals to the County Environmental Division; however, our Division has not had a chance to review the submitted materials to release or reduce bond being held for the project. We anticipate that this can be completed in the next few weeks.

Thank you for your time and patience in this matter. If you have any additional questions, please call me at 757-253-6823.

Sincerely,

Scott J. Thomas, P.E.
Senior Engineer
Environmental Division

SJT/sjt

SWMProg\Admin\letter.wpd

Engineers and General Contractors

J & J CONTRACTORS, Inc.

RECEIVED
SEP 16 2005
ENVIRONMENTAL DIVISION

To: James City County Environmental Division

Attn: Scott Thomas

From: J & J Contractors

Subject: Collections Building – Bioretention Pond

Scott,

J & J is forwarding the Record Drawing and Construction Certification Form for the above project as required. Brian Deliege had visited the site and approved the project on August 29, 2005 (see attached emails). Please inform Brian that we appreciate all his help in this matter. Thank you.

Superintendent

Andy Zajac

Cell Phone (757) 592-2229
Office (757) 564-9183
Fax (757) 564-9184

Phone **(978) 452-9898**
Fax **(978) 452-3796**

175 Cabot Street, Suite 440
Lowell, MA 01854

Yahoo! My Yahoo! Mail | Donate to Hurricane Relief

YAHOO! MAIL Welcome, jjcqcml [Sign Out, My Account]

Search the Web Search

Mail Home - Mail Tutorials - Help

Mail Addresses Calendar Notepad What's New - Mail For Mobile - Mail Upgrades - Mail Options

Check Mail Compose Search Mail Search the Web

Get VONAGE.
1st Month FREE!

This message is not flagged. [Flag Message - Mark as Unread]

What's your Credit Score? See it FREE!

Wells Fargo Home Equity Loan

Get your card in 3 days!*

Get an MBA now! Fast, Free Info

Subject:

Date: Mon, 29 Aug 2005 10:47:49 -0400

From: "John Glass" <john.glass@alphacorporation.com> Add to Address Book

To: bdaliege@james-city.va.us

CC: Ron_Treants@nps.gov, Curt_Edlund@contractor.nps.gov, jjcqcml@yahoo.com, Andy.Zajac@verizon.net, sturner@danielco.net, ljs@danielco.net, kristie_franzmann@nps.gov, john_freeman@nps.gov, dstemann@carltonabbott.com, epillsbury@carltonabbott.com

Brian,
This will confirm your field inspection this morning at Jamestown Island. The Bioretention Pond at the New Collections Building is acceptable as repaired. The access road and side slopes are also acceptable as repaired. J&J has completed the pond as-built survey, and the JCC permit closure documents which are ready for submission. You confirmed that final approval would be nothing more than a rubber stamp on the documents, assuming they are complete.

The NPS now intends to install another silt fence along the base of the newly seeded areas. We discussed the treatment upon removal of the silt fence later this year. You agreed that it only need to have the trench re-covered with soil and covered with seed and straw placed over the raw ground to be in compliance. We will have this work performed as discussed.

Thank you,

John D. Glass
Alpha Corporation
Jamestown Island Projects
(757) 564-3822
(757) 564-3823 fax

Copyright © 1994-2005 Yahoo! Inc. All rights reserved. Terms of Service - Copyright/IP Policy - Guidelines - Ad Feedback
NOTICE: We collect personal information on this site.
To learn more about how we use your information, see our Privacy Policy

Yahoo! My Yahoo! Mail | Donate to Hurricane Relief

YAHOO! MAIL Welcome, jjcqcml [Sign Out, My Account]

Search the Web Search

Mail Home - Mail Tutorials - Help

SPEAK. Listen. Drag. Drop. Send. Share. Show. Hide. GET IT ALL FREE

Mail Addresses Calendar Notepad What's New - Mail For Mobile - Mail Upgrades - Mail Options

Check Mail Compose Search Mail Search the Web

Get VONAGE. 1st Month FREE!

Folders [Add - Edit]
Inbox
Draft
Sent
Bulk [Empty]
Trash [Empty]

What's your Credit Score?
Netflix-$9.99/mo. No Late Fees!
Ringtone ForYou Totally Free!
Your Ringtones Totally FREE!

Previous | Next | Back to Messages Printable View - Full Headers

Delete Reply Forward Spam Move...

This message is not flagged. [Flag Message - Mark as Unread]

Subject: RE: Jamestown Collections Building Site - bioretention pond

Date: Mon, 29 Aug 2005 07:32:29 -0400

From: "Brian Daliege" <BDaliege@james-city.va.us> View Contact Details

To: "Michael Lizza" <jjcqcml@yahoo.com>

Michael,
I can make it out there this morning, I should be in that area around 10am to check things out

Brian E. Daliege
James City County Environmental Inspector
Office: (757)-253-6672
101 Mounts Bay Rd P.O. Box 8784
Williamsburg, Va
23187

-----Original Message-----
From: Michael Lizza [mailto:jjcqcml@yahoo.com]
Sent: Friday, August 26, 2005 2:37 PM
To: Brian Daliege
Subject: Jamestown Collections Building Site - bioretention pond

Brian,

Good afternoon. We're requesting that you to come out to the site to approve the work that has been done on the bioretention pond and roadway area as soon as possible. This afternoon would be great if possible, but if not, then Monday morning.

Thank you for your help,

Michael V. Lizza
J & J Contractors

Start your day with Yahoo! - make it your home page

Delete Reply Forward Spam Move...

Previous | Next | Back to Messages Save Message Text

Date Record Created: [redacted]

Created By: [redacted]

WS_BMPNO: JR069

Print Record

PRINTED ON
Thursday, March 11, 2010
3:16:45 PM

WATERSHED	JR
BMP ID NO	069
PLAN NO	SP-43-06
TAX PARCEL	
PIN NO	54201000001
CONSTRUCTION DATE	
PROJECT NAME	Jamestown Collection Building
FACILITY LOCATION	Colonial National Park Jamestown Island
CITY-STATE	Jamestown, VA
CURRENT OWNER	AVPA
OWNER ADDRESS	1367 Colonial Parkway
OWNER ADDRESS 2	
CITY-STATE-ZIP CODE	Jamestown, VA 23081
OWNER PHONE	757-229-4997
MAINT AGREEMENT	No
EMERG ACTION PLAN	No

Get Last BMP No

Return to Menu

MAINTENANCE PLAN	No	CTRL STRUC DESC	Conc Inlet
SITE AREA acre	22	CTRL STRUC SIZE inches	
LAND USE	Historic Preservatio	OTLT BARRL DESC	Triple PVC
old BMP TYP	Infiltration Basin	OTLT BARRL SIZE inch	6
JCC BMP CODE	C3 Infiltration Basin .5		
POINT VALUE		EMERG SPILLWAY	No
		DESIGN HW ELEV	5.8
		PERM POOL ELEV	2.8
SVC DRAIN AREA acres	1.09	2-YR OUTFLOW cfs	1.66
		10-YR OUTFLOW cfs	3.57
		REC DRAWING	Yes
SERVICE AREA DESCRI	Commercial/Historical		
IMPERV AREA acres	0.49	CONSTR CERTIF	Yes
RECV STREAM			
EXT DET-WQ-CTRL	No	LAST INSP DATE	Inspected by: [redacted]
WTR QUAL VOL acre-ft		INTERNAL RATING	
CHAN PROT CTRL	No	MISC/COMMENTS	
CHAN PROT VOL acre-ft		North of Yeardley House.	
SW/FLOOD CONTROL	No		
GEOTECH REPORT	No		

Additional Comments: [redacted]

RESOLUTION

CASE NO. SUP-21-02. JAMESTOWN ISLAND EXPANSION

WHEREAS, the Board of Supervisors of James City County has adopted by ordinance specific land uses that shall be subjected to a special use permit process; and

WHEREAS, Ms. Jane Jacobs of Carlton Abbott and Partners has applied on behalf of the Association for the Preservation of Virginia Antiquities for a special use permit to allow a building for offices and storage to be approximately 8,000 square feet on two floors located adjacent to and behind the Yeardley House and Rediscovery Center and to allow a one-story museum exhibit facility approximately 7,500 square feet in size adjacent to and partially over an archaeological site known as the Ludwell Statehouse complex; and

WHEREAS, the property is located on land zoned R-8, Rural Residential, and can be further identified as Parcel No. (1-1) on James City County Real Estate Tax Map No. (54-2); and

WHEREAS, the Planning Commission, following its public hearing on January 13, 2003, voted 6-0 to recommend approval of this application.

NOW, THEREFORE, BE IT RESOLVED that the Board of Supervisors of James City County, Virginia, does hereby approve the issuance of Special Use Permit No. SUP-21-02 as described herein with the following conditions:

1. An archaeological study, performed in accordance with County policy, shall be submitted to and approved by the Director of Planning before any land disturbing activity will be allowed to take place.

2. A site plan shall be submitted to and approved by the Planning Director.

3. Prior to preliminary site plan approval, an engineering study shall be submitted to and approved by the James City Service Authority confirming the sanitary sewer system capacity.

4. Prior to preliminary site plan approval, the Resource Protection Area and Buffer in the vicinity of the Pole Shed and proposed BMP Easement 2 (as shown in the drawing: Proposed NPS Easements at APVA Property, in the Conceptual Stormwater Management Plan for the James City County Special Use Permit application) shall have existing equipment and debris removed, as approved by the County Environmental Director. This area shall be restored with vegetation, as approved by the County Environmental Director.

5. Grid pavers or other pervious paving surfaces shall be used in place of impervious surfaces for the construction or relocation of access roadways or paths within the 50-foot Resource Protection Area buffer, as approved by the County Environmental Director.

6. The special use permit is not severable. Invalidation of any word, phrase, clause, sentence, or paragraph shall invalidate the remainder.

Jay T. Harrison, Sr.
Chairman, Board of Supervisors

SUPERVISOR	VOTE
MCGLENNON	AYE
BROWN	AYE
GOODSON	ABSENT
KENNEDY	AYE
HARRISON	AYE

ATTEST:

Sanford B. Wanner
Clerk to the Board

Adopted by the Board of Supervisors of James City County, Virginia, this 11th day of February, 2003.

sup-21-02.res

Gravelpave2

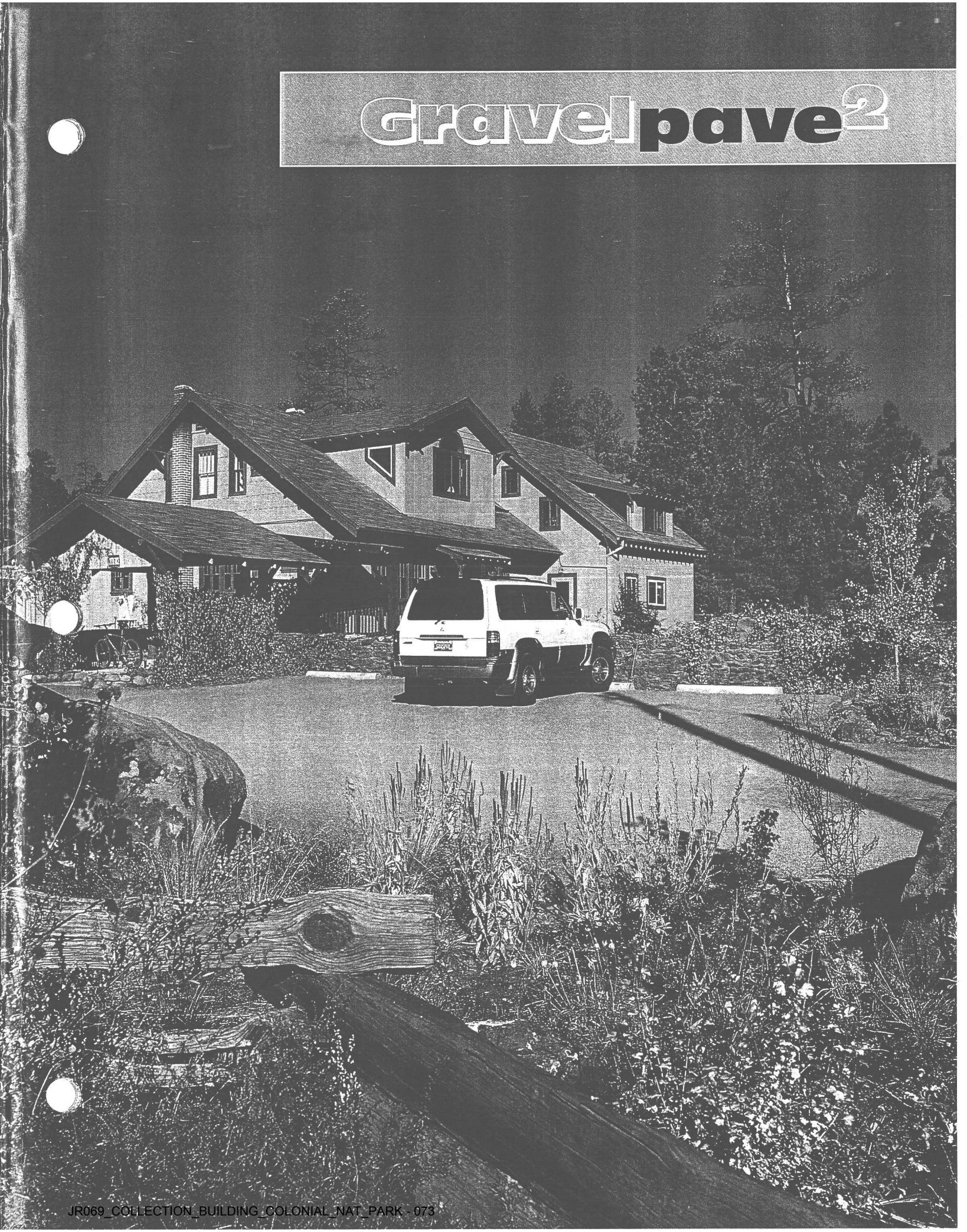

JR069_COLLECTION_BUILDING_COLONIAL_NAT_PARK - 073

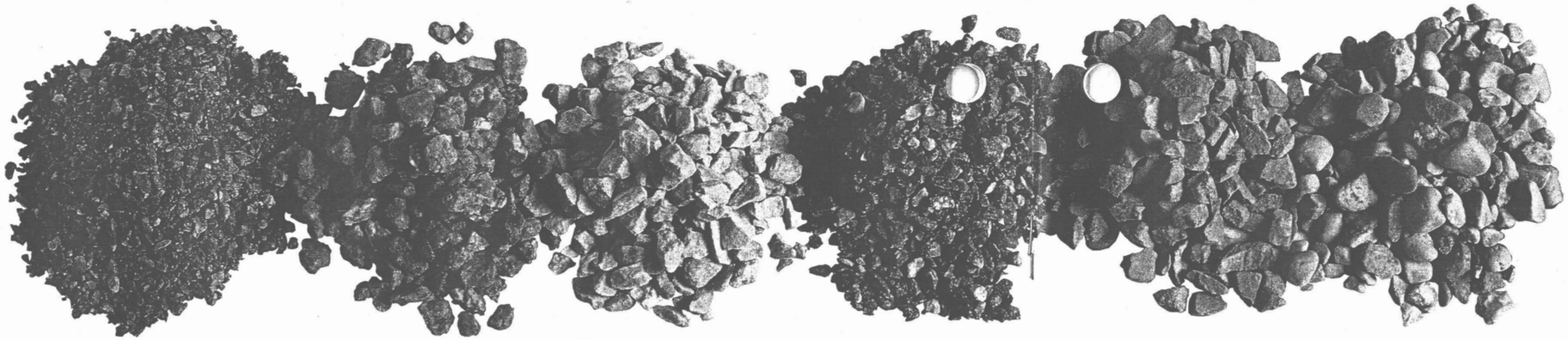

Crushed Granite 3/16" (actual size)

Decomposed Granite 3/8" (actual size)

Hard Limestone 3/8" (actual size), Chicago, IL. Add 25-30% clean sharp mason's sand to maintain porosity.

Carbon Canyon 5/16" minus, (actual size) San Diego, CA.

Sonoran Tan 3/8" (actual size) Tucson, AZ.

Sharp Angular Pea Gravel (actual size), Elgin, IL. Do not use rounded pea gravel.

Our technical support staff will assist with selection of gravel sources. The photographic samples shown here in actual size will help you narrow your gravel choices. Should you have questions concerning the selection, please submit a small sample for approval prior to specifying or securing the materials.

Size/Shape Fill Requirements

You will need 1" of gravel fill, compacted. Be careful to order enough for the compaction process and choose a gravel size that will nest well into the rings. We have found that 3/16" minus crushed stone and sometime 3/8" with limited small sharp screenings (#40 to #100 screen) works well. Washed gravel will roll within the rings and will also "roll about." For this reason, we do not recommend pea gravel, even though it is often very pretty. A visit to your local quarry is suggested. We have found that some geological areas of the United States have limited types of sharp gravel available. It has been necessary to import gravel from a neighboring state, but remember the amounts are relatively small — just the upper one inch of the cross section. Gravel should be as free of fines as possible. To maintain porosity, avoid soft stone materials that break easily or form a powder.

Other Fill Materials

Please ask our staff for assistance with this category since it is use-specific and often experimental. Ground rubber, crushed glass, crushed brick, and many other materials can be useful as attractive fill materials for various applications. Thermoset (epoxy, polyurethane, etc.) binders may be cost prohibitive for most projects, but offer unique design possibilities, including clarity, color enhancement (wet look), flexibility, and durability.

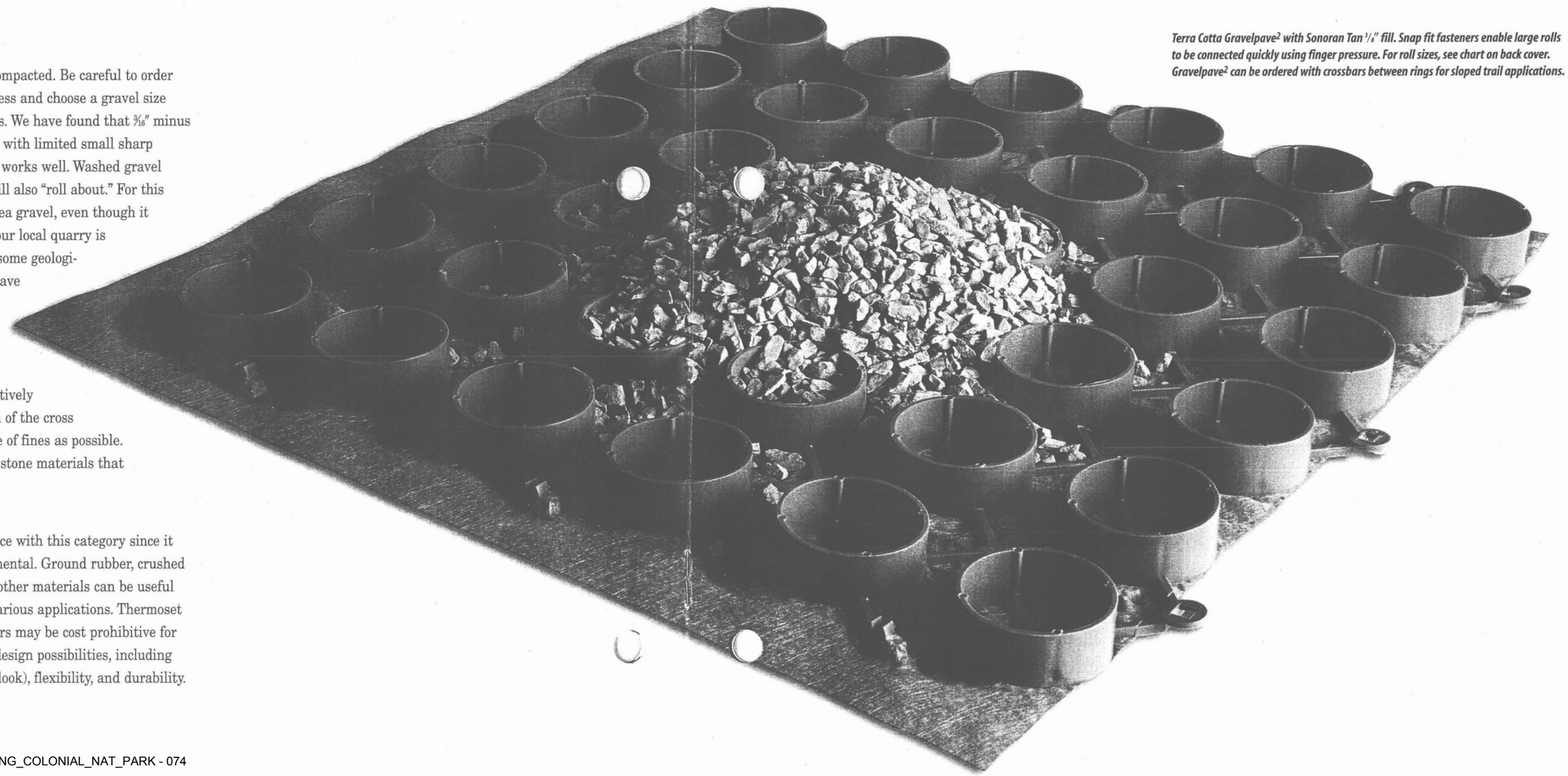

Terra Cotta Gravelpave² with Sonoran Tan 3/8" fill. Snap fit fasteners enable large rolls to be connected quickly using finger pressure. For roll sizes, see chart on back cover. Gravelpave² can be ordered with crossbars between rings for sloped trail applications.

JR069_COLLECTION_BUILDING_COLONIAL_NAT_PARK - 074

Invisible Structures, Inc. family of other products for site improvement.

Grasspave²

Reinforces turf for driving, parking, and fire lanes.

Slope 2

Three-dimensional "blankets" to contain slope soil.

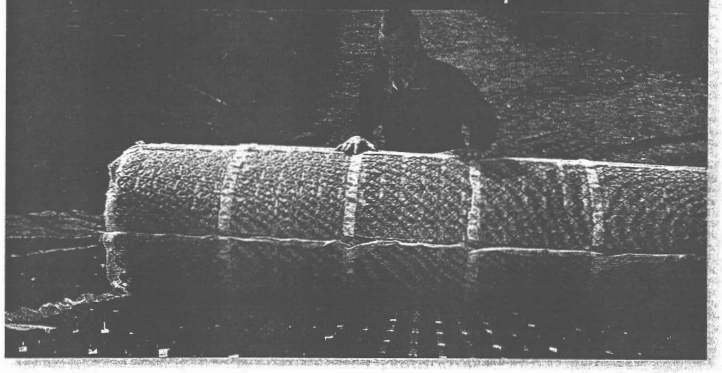

Draincore²

Heavy-duty subsurface void for water drainage/air infiltration.

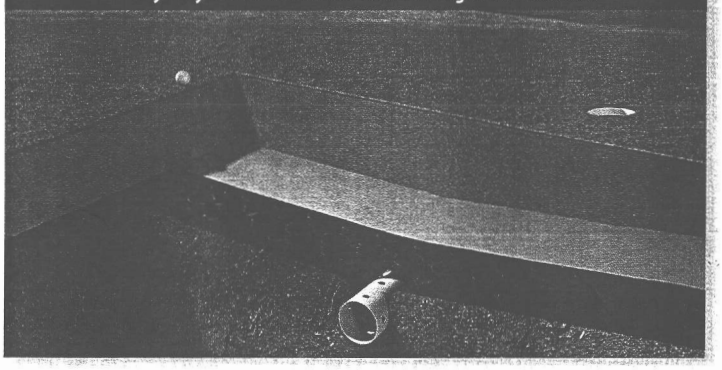

Rainstore³

Underground "tank" storage for storm water.

Surefoot 4

Surface improvement for equestrian applications.

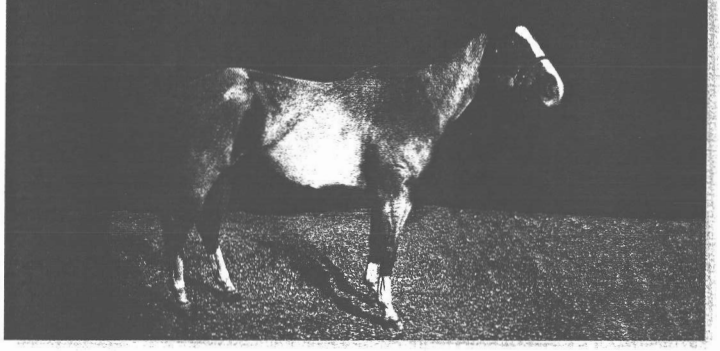

Invisible Structures — Standard Product Roll Sizes

	Width		Length		Diameter		Area		Weight	
Model	m	ft	m	ft	m	ft	m²	ft²	kg	lbs
1010†	1	3.3	10	32.8	0.5	1.7	10	108	19	41
1020	1	3.3	20	65.6	0.8	2.7	20	215	37	82
1050	1	3.3	50	164	1.2	4	50	538	93	205
1520	1.5	4.9	20	65.6	0.8	2.7	30	323	56	123
1550*	1.5	4.9	50	164	1.2	4	75	807	139	308
2020†	2	6.6	20	65.6	0.8	2.7	40	430	75	164
2050*	2	6.6	50	164	1.2	4	100	1,076	186	410
2520	2.5	8.2	20	65.6	0.8	2.7	50	538	93	205
2550*	2.5	8.2	50	164	1.2	4	125	1,346	233	513

†Most popular roll sizes, usually in stock.

*Roll sizes marked with asterisks should be installed by lifting machines only. All other rolls can be installed manually (2 people advised). Rolls apply to Grasspave², Gravelpave², Draincore², and Slopetame². Custom roll sizes available by request.

Invisible Structures, Inc.

1597 Cole Blvd., Suite 310
Golden, CO 80401
1.800.233.1510
Fax 1.800.233.1522
www.invisiblestructures.com

Invisible Structures 1982 20 2002

CADD DISK

CD-ROM

IECA MEMBER

Patent number 5,250,340. Copyright © 1999 Invisible Structures, Inc.

WEEKLY PROGRESS MEETING

DATE: 12/16/03 **MEETING NO.** 2

PARK: COLONIAL NATIONAL HISTORICAL PARK
JAMESTOWN COLLECTIONS BUILDING

CONTRACT NO. 1443N4500030905

CONTRACTOR: J&J CONTRACTORS, INC.
175 CABOT STREET,
LOWELL, MA 01854

CONTRACT STATUS:

CONTRACT MODIFICATIONS: NONE
NOTICE TO PROCEED ISSUED: 12/1/03
ORIGINAL CONTRACT TIME: 365 (CALENDAR DAYS)

1. THE MEETING WAS CALLED TO ORDER AT 11:00 A.M. WITH THE FOLLOWING PEOPLE IN ATTENDENCE:

   A. SEE ATTACHED SIGN-IN SHEET.

2. MINUTES OF PREVIOUS MEETING:

   A. MOST OF THE ISSUES FROM THE PREVIOUS MEETING WILL BE DISCUSSED IN THE MEETING TODAY.

3. REVIEW OF WORK IN PROGRESS:

   A. PRIME CONTRACTOR, J&J CONTRACTORS CONTINUES TO INSTALL SILT FENCING, CONSTRUCTION FENCING, AND TREE PROTECTION BARRIERS.

   B. J&J CONTRACTORS IS MAKING PREPARATIONS FOR THE REMOVAL OF THE ENTRANCE GATES AND INSTALLING THE PROTECTIVE CONCRETE BARRIERS.

   C. J&J CONTRACTORS HAD A LOAD OF REINFORCING STEEL DELIVERED ON SITE. HOWEVER, NO APPROVED SUBMITTAL HAS BEEN RECEIVED AND THE STEEL WAS DELIVERED AT THE CONTRACTORS RISK.

THE LOCATION THAT THE STEEL WAS UNLOADED AT THE BIO RETENTION POND WAS APPROVED BY ERIC FROM APVA. BOB TURNAGE TOLD TIM ARRINGTON THAT THE STEEL COULD NOT BE PLACED DIRECTLY ON THE GROUND. TIM SAID HE WOULD PLACE SOME DUNNAGE UNDER THE STEEL AND RAISE UP ABOUT 4".

D. J&J CONTRACTORS CONTINUES TO SET-UP OFFICE TRAILERS AND REVIEW OF CONTRACT DOCUMENTS.

4. FIELD OBSERVATIONS, PROBLEMS, AND DECESIONS:

A. BOB HOLT FROM NPS YORKTOWN HAD CONCERNS ABOUT THE INSTALLATION OF THE SILT FENCE. THE CONTRACTOR HAS BEEN REMINDED THAT THE SILT FENCE MUST BE INSTALLED IN ACCORDANCE WITH THE EROSION AND CONTROL SEDIMENT PLAN.

B. J&J CONTRACTORS SUPERINTEDENT, MR. TIM ARRINGTON ASKED IF HE COULD PLACE STONE THROUGHOUT THE STORAGE/LAYDOWN AREA AND AT THE ENTRANCE TO THE OFFICE TRAILERS. ERIC FROM APVA SAID IT COULD BE DONE IF A FILTER CLOTH WAS USED AND THE STONE PLACED ON TOP OF THE FILTER CLOTH, AND IT WOULD BE REMOVED AT THE COMPLETION OF THE PROJECT.

C. J&J CONTRACTORS SUPERINTEDENT, MR. TIM ARRINGTON ASKED IF HE COULD PLACE STONE IN THE HOLES IN THE ROADWAY AT THE ENTRANCE TO THE PROJECT OFF OF THE PARKWAY. APVA WAS IN AGREEMENT.

5. PROBLEMS WHICH MAY IMPEDE PLANNED PROGRESS:

A. RELOCATION OF PAD MOUNT TRANSFORMER IS TENTATIVELY SCHEDULED TO START

JR069_COLLECTION_BUILDING_COLONIAL_NAT_PARK - 077

ON 1/10/04. JENNY FROM DOMINION VIRGINIA POWER WILL KEEP US UP TO DATE.

B. RELOCATION OF TELEPHONE PEDESTALS SHOWN ON CONTRACT DWG. SHEET E-5 DOES NOT SAY WHO IS RESPONSIBLE FOR RELOCATION. BOB TURNAGE AND BOB HOLT FROM NPS WILL INVESTIGATE AND FIND OUT.

C. J&J CONTRACTORS PREPARED A RFI FOR "HAND EXCAVATIONS" WHICH WAS FORWARDED TO MR. RON TREANTS FROM THE NPS DSC. NO RESPONSE TO DATE.

D. ERIC FROM APVA HAS HAD ALL OF THE NON-PUBLIC UTILITIES MARKED AND FLAGGED AS REQUESTED.

E. J&J CONTRACTORS HAS NOT SENT THE REQUESTED WEIGHT LIMITS FOR CONCRETE TRUCKS TO MR. BOB HOLT AS OF THIS DATE. TIM ARRINGTON FROM J&J CONTRACTORS WILL SEND INFORMATION AS REQUESTED.

F. J&J CONTRACTORS PRESENTED A PLAN FOR EQUIPMENT AND VEHICLE FUELING OPERATIONS AND A SMOKING PLAN. THE PLAN WAS REVIEWED AND THE CONTRACTOR WAS ASKED TO RESUBMIT WITH THE FOLLOWING CORRECTIONS:

1. ALL CONTAMINATED SOILS MUST BE REMOVED AND NEW SOIL PLACED AT CONTRACTORS EXPENSE.

2. PICK ANOTHER LOCATION FOR THE SMOKING AREA. BIMAL FROM J&J CONTRACTORS SUGGESTED THE AREA NEXT TO THE OFFICE TRAILERS.

JR069_COLLECTION_BUILDING_COLONIAL_NAT_PARK - 078

G. BOB TURNAGE WILL CHECK WITH JENNY FROM DOMINION VIRGINIA POWER ON THE ROUTING OF THEIR UNDERGROUND TRENCHING AS TO AVOID ANY OF THE NEW STRUCTURES AND MAN-HOLES, AS REQUESTED BY J&J CONTRACTORS.

H. TIM ARRINGTON FROM J&J CONTRACTORS SAID THE ELECTRICIAN IS SCHEDULED TO START HIS UNDERGROUND CONDUITS ON 1/4/04.

6. CONTRACTORS QUALITY CONTROL PROGRAM:

A. AS OF THIS DATE AN APPROVED PLAN OR A DESIGNATED QC MANAGER HAS BEEN RECEIVED.

B. BIMAL FROM J&J CONTRACTORS PLANS TO TALK TO SOMEONE TODAY.

7. REVIEW OF SUBMITTALS SCHEDULE AND STATUS OF SUBMITTALS:

A. AS OF THIS DATE, BOB TURNAGE HAS NOT RECEIVED ANY SUBMITTALS.

B. BOB TURNAGE RECEIVED A COPY OF THEIR SUBMITTAL LOG AND THE RFI LOG FROM ROB AT CARLTON ABBOTT.

C. DAVID FROM CARLTON ABBOTT ASKED BIMAL FROM J&J CONTRACTORS ABOUT SUBMITTALS AND BIMAL SAID THAT NONE HAD BEEN SENT OUT IN ABOUT TWO WEEKS.

D. BOB TURNAGE WILL CALL RON TREANTS IN DSC ABOUT SUBMITTALS.

8. REVIEW OF OFF SITE FABRICATION AND DELIVERY SCHEDULES:

A. AWAITING SUBMITTALS

JR069_COLLECTION_BUILDING_COLONIAL_NAT_PARK - 079

B. NO APPROVED SUBMITTAL HAS BEEN RECEIVED FOR THE REINFORCING STEEL THAT WAS DELIVERED TO PROJECT ON 12/15/03.

9. STATUS OF PROJECT RECORD DRAWINGS:

A. NO COMMENT

10. STATUS OF OPERATION AND MAINTENANCE MANUALS:

A. NO COMMENT

11. MAINTENANCE OF PROJECT SCHEDULE:

A. AS OF THIS DATE NO APPROVED PROJECT SCHEDULE HAS BEEN RECEIVED. BIMAL FROM J&J CONTRACTORS WILL RESUBMIT.

B. DAVID STEMANN FROM CARLTON ABBOTT TOLD J&J CONTRACTORS THAT THE INSPECTION OF STRUCTURAL STEEL AND REINFORCING STEEL NEEDS A SPECIAL INSPECTION BY THE ENGINEER, AND A ADVANCE NOTIFICATION OF (48) HOURS WOULD BE REQUIRED TO HAVE THE ENGINEER ON SITE.

12. CORRECTIVE MEASURES TO REGAIN PROJECTED SCHEDULES:

A. NO COMMENTS

13. PLANNED PROGRESS DURING SUCCEEDING WORK PERIOD:

A. NO COMMENTS

14. COORDINATION OF PROJECTED PROGRESS:

A. BOB TURNAGE WILL CONTACT DOMINION VIRGINIA POWER ON STATUS OF

JR069_COLLECTION_BUILDING_COLONIAL_NAT_PARK - 080

THE RELOCATION OF PAD MOUNT TRANSFORMER AND ROUTING OF CONDUITS AND TRENCHING.

15. MAINTENANCE OF QUALITY AND WORK STANDARDS:

A. NO COMMENTS

16. EFFECT OF PROPOSED CHANGES ON PROGRESS SCHEDULE AND COORDINATION:

A. NO COMMENTS

17. OTHER BUSINESS RELATING TO WORK:

A. BOB TURNAGE ASKED J&J CONTRACTORS TO PROVIDE A LISTING OF ALL SUBCONTRACTORS.

B. TIM ARRINGTON FROM J&J CONTRACTORS ASKED IF A WEEKLY PROGRESS MEETING WAS REQUIRED AT THIS POINT IN CONSTRUCTION, AND POSSIBLY MEETING EVERY TWO WEEKS. EVERYONE IN THE MEETING AGREED TO MEET ON A WEEKLY BASIS.

C. J&J CONTRACTORS WAS ASKED TO PROVIDE A DAILY WORK SCHEDULE.

D. TIM FROM J&J CONTRACTORS SAID THAT THE EXISTING HANDICAP PARKING WOULD REMAIN UNTIL THE TEMPORARY AREA WAS CONSTRUCTED.

E. JOE BUCHITE FROM JAMES CITY COUNTY ENVIRONMENTAL OFFICE APPROVED J&J CONTRACTORS REQUEST TO DELAY THE INSTALLATION OF THE SILT FENCE AROUND THE BIO RETENTION POND AREA.

JR069_COLLECTION_BUILDING_COLONIAL_NAT_PARK - 081

F. TIM ARRINGTON FROM J&J CONTRACTORS, WHO IS THE "DESIGNATED LAND DISTURBER" STILL DOES NOT HAVE THE REQUIRED CERTIFICATION OR THE DCR MANUAL ON SITE.

JR069_COLLECTION_BUILDING_COLONIAL_NAT_PARK - 082

ALPHA CORPORATION
21351 Ridgetop Circle, Suite 200 Dulles, VA 20166 (703) 450-0800 Fax: (703) 450-0043

NPS JAMESTOWN COLLECTIONS BUILDING
CONTRACT # 1443N4500030905

SUBJECT: WEEKLY PROGRESS MEETING #2

TIME: 11:00 AM, LOCATION: ON SITE INSPECTORS TRAILER DATE: 12/16/03

ATTENDEES	ORGANIZATION	TELEPHONE NO.
R.L. TURNAGE	ALPHA CORPORATION	757-342-7455 (CELL)
Louis J Malon	APVA	804-648-1888
ERIC DEETZ	APVA	757 229 4997 x107
Bob Holt	Colo	757-898 2440
Robert Stinger	APVA	757-897-0829
A.J. Spinella	J+J	
Tim H Arrington	J&J	564-983
BIMAL PATEL	J&J	978 452 9898
DAVID STEMANN	CA&P	(757) 220 1095

R. L. TURNAGE RLT
CONSULTANT INSPECTOR
DATE: 12/16/03