CERTIFICATE OF AUTHENTICITY

THIS IS TO CERTIFY THAT THE FOLLOWING ELECTRONIC RECORDS ARE TRUE AND ACCURATE REPRODUCTIONS OF THE ORIGINAL RECORDS OF JAMES CITY COUNTY GENERAL SERVICES DEPARTMENT- STORMWATER DIVISION; WERE SCANNED IN THE REGULAR COURSE OF BUSINESS PURSUANT TO GUIDELINES ESTABLISHED BY THE LIBRARY OF VIRGINIA AND ARCHIVES; AND HAVE BEEN VERIFIED IN THE CUSTODY OF THE INDIVIDUAL LISTED BELOW.

BMP NUMBER: **MC002**

DATE VERIFIED: **December 6, 2012**

QUALITY ASSURANCE TECHNICIAN: **Leah Hardenbergh**

Leah Hardenbergh

LOCATION: WILLIAMSBURG, VIRGINIA

Stormwater Division

MEMORANDUM

Date: March 28, 2012

To: Michael J. Gillis, Virginia Correctional Enterprises Document Management Services

From: Leah Hardenbergh

PO: 110426

Re: Files Approved for Scanning

General File ID or BMP ID: **MC002**

PIN: **3840100003D**

Owner Name (if known): **NEW QUARTER INDUSTRIAL PARK**

Legal Property Description: **NEW QUARTER IND PARK**

Site Address: **101 NEW QUARTER DR**

(For internal use only):

Box # 3

Agreements (in file as of scan date): N Book or Doc #:

MC-002

Contents for Stormwater Management Facilities As-built Files

Each file is to contain:

1. As-built plan
2. Completed construction certification
3. Construction Plan
4. Design Calculations
5. Watershed Map
6. Maintenance Agreement
7. Correspondence with owners
8. Inspection Records
9. Enforcement Actions

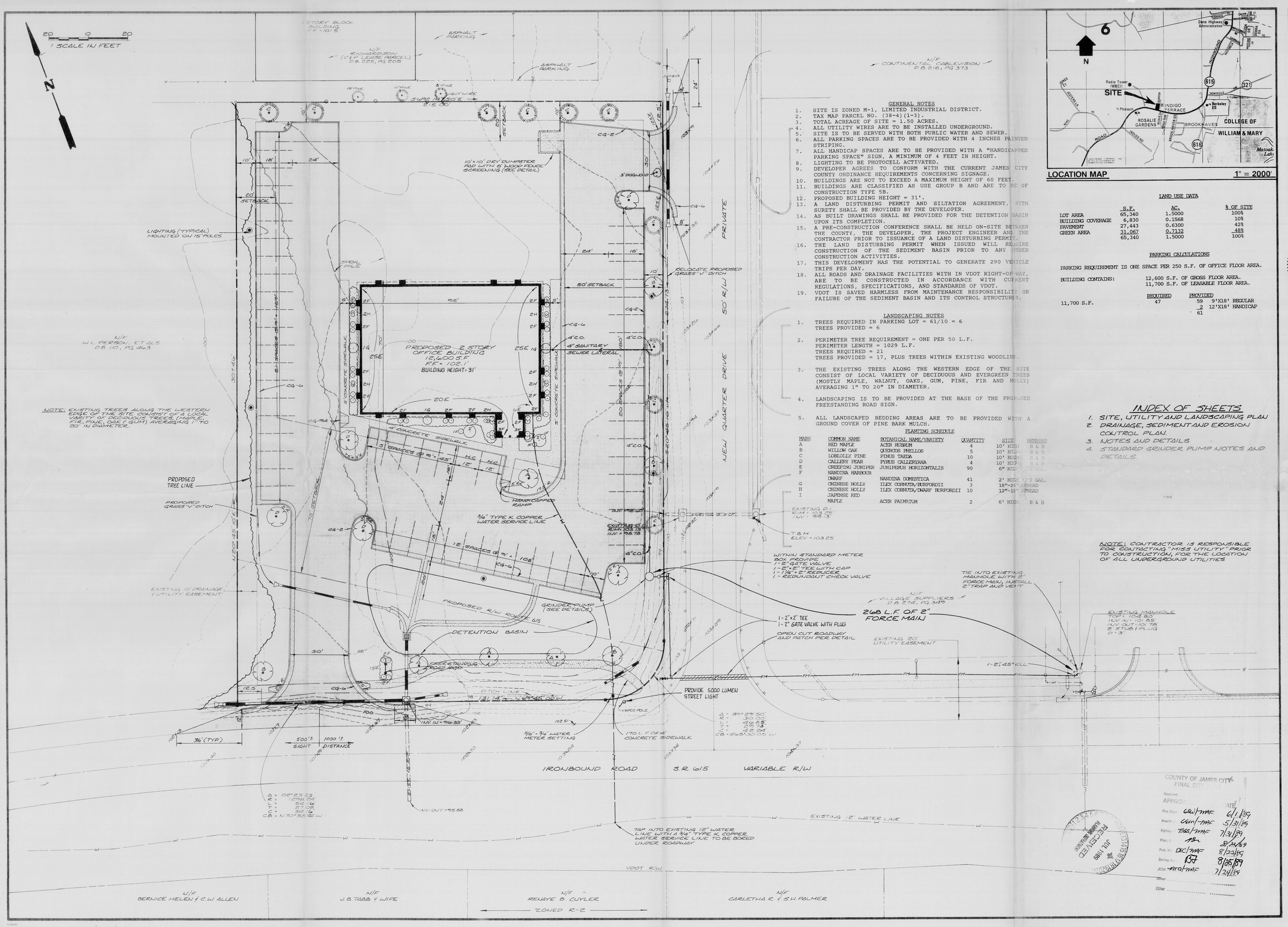

GENERAL NOTES

1. SITE IS ZONED M-1, LIMITED INDUSTRIAL DISTRICT.
2. TAX MAP PARCEL NO. (38-4)(1-3).
3. TOTAL ACREAGE OF SITE = 1.50 ACRES.
4. ALL UTILITY WIRES ARE TO BE INSTALLED UNDERGROUND.
5. SITE IS TO BE SERVED WITH BOTH PUBLIC WATER AND SEWER.
6. ALL PARKING SPACES ARE TO BE PROVIDED WITH 4 INCHES PAINTED STRIPING.
7. ALL HANDICAP SPACES ARE TO BE PROVIDED WITH A "HANDICAPPED PARKING SPACE" SIGN, A MINIMUM OF 4 FEET IN HEIGHT.
8. LIGHTING TO BE PHOTOCELL ACTIVATED.
9. DEVELOPER AGREES TO CONFORM WITH THE CURRENT JAMES CITY COUNTY ORDINANCE REQUIREMENTS CONCERNING SIGNAGE.
10. BUILDINGS ARE NOT TO EXCEED A MAXIMUM HEIGHT OF 60 FEET.
11. BUILDINGS ARE CLASSIFIED AS USE GROUP B AND ARE TO BE OF CONSTRUCTION TYPE 5B.
12. PROPOSED BUILDING HEIGHT = 31'.
13. A LAND DISTURBING PERMIT AND SILTATION AGREEMENT, WITH SURETY SHALL BE PROVIDED BY THE DEVELOPER.
14. AS BUILT DRAWINGS SHALL BE PROVIDED FOR THE DETENTION BASIN UPON ITS COMPLETION.
15. A PRE-CONSTRUCTION CONFERENCE SHALL BE HELD ON-SITE BETWEEN THE COUNTY, THE DEVELOPER, THE PROJECT ENGINEER AND THE CONTRACTOR PRIOR TO ISSUANCE OF A LAND DISTURBING PERMIT.
16. THE LAND DISTURBING PERMIT WHEN ISSUED WILL REQUIRE CONSTRUCTION OF THE SEDIMENT BASIN PRIOR TO ANY OTHER CONSTRUCTION ACTIVITIES.
17. THIS DEVELOPMENT HAS THE POTENTIAL TO GENERATE 290 VEHICLE TRIPS PER DAY.
18. ALL ROADS AND DRAINAGE FACILITIES WITHIN IN VDOT RIGHT-OF-WAY, ARE TO BE CONSTRUCTED IN ACCORDANCE WITH CURRENT REGULATIONS, SPECIFICATIONS, AND STANDARDS OF VDOT.
19. VDOT IS SAVED HARMLESS FROM MAINTENANCE RESPONSIBILITY OR FAILURE OF THE SEDIMENT BASIN AND ITS CONTROL STRUCTURES.

LANDSCAPING NOTES

1. TREES REQUIRED IN PARKING LOT = 61/10 = 6
   TREES PROVIDED = 6
2. PERIMETER TREE REQUIREMENT = ONE PER 50 L.F.
   PERIMETER LENGTH = 1029 L.F.
   TREES REQUIRED = 21
   TREES PROVIDED = 17, PLUS TREES WITHIN EXISTING WOODLINE.
3. THE EXISTING TREES ALONG THE WESTERN EDGE OF THE SITE CONSIST OF LOCAL VARIETY OF DECIDUOUS AND EVERGREEN TREES (MOSTLY MAPLE, WALNUT, OAKS, GUM, PINE, FIR AND HOLLY) AVERAGING 1" TO 20" IN DIAMETER.
4. LANDSCAPING IS TO BE PROVIDED AT THE BASE OF THE PROPOSED FREESTANDING ROAD SIGN.
5. ALL LANDSCAPED BEDDING AREAS ARE TO BE PROVIDED WITH A GROUND COVER OF PINE BARK MULCH.

PLANTING SCHEDULE

MARK	COMMON NAME	BOTANICAL NAME/VARIETY	QUANTITY	SIZE	REMARKS
A	RED MAPLE	ACER RUBRUM	4	10' HIGH	B & B
B	WILLOW OAK	QUERCUS PHELLOS	5	10' HIGH	B & B
C	LOBLOLLY PINE	PINUS TAEDA	10	10' HIGH	B & B
D	CALLERY PEAR	PYRUS CALLERYANA	4	10' HIGH	B & B
E	CREEPING JUNIPER	JUNIPERUS HORIZONTALIS	90	6" HIGH	1 GAL.
F	NANDINA HARBOUR DWARF	NANDINA DOMESTICA	41	2' HIGH	2 GAL.
G	CHINESE HOLLY	ILEX CORNUTA/BURFORDII	3	18"-24" SPREAD	
H	CHINESE HOLLY	ILEX CORNUTA/DWARF BURFORDII	10	12"-18" SPREAD	
I	JAPENSE RED MAPLE	ACER PALMATUM	2	6' HIGH	B & B

LAND USE DATA

	S.F.	AC.	% OF SITE
LOT AREA	65,340	1.5000	100%
BUILDING COVERAGE	6,830	0.1568	10%
PAVEMENT	27,443	0.6300	42%
GREEN AREA	31,067	0.7132	48%
	65,340	1.5000	100%

PARKING CALCULATIONS

PARKING REQUIREMENT IS ONE SPACE PER 250 S.F. OF OFFICE FLOOR AREA.

BUILDING CONTAINS: 12,600 S.F. OF GROSS FLOOR AREA.
11,700 S.F. OF LEASABLE FLOOR AREA.

	REQUIRED	PROVIDED
11,700 S.F.	47	59 9'X18' REGULAR
		2 12'X18' HANDICAP
		61

LOCATION MAP 1" = 2000'

INDEX OF SHEETS

1. SITE, UTILITY AND LANDSCAPING PLAN
2. DRAINAGE, SEDIMENT AND EROSION CONTROL PLAN.
3. NOTES AND DETAILS
4. STANDARD GRINDER PUMP NOTES AND DETAILS.

No.	DATE	REVISION / COMMENT / NOTE	BY
1	6/7/89	REVISED PER VDOT / PUBLIC WORKS	S.O.W.

COMMONWEALTH OF VIRGINIA — STEVEN O. WIGLEY No. 019307 — PROFESSIONAL ENGINEER

AES, a professional corporation
5248 Olde Towne Road, Suite 1
Williamsburg, Virginia 23185
(804) 253-0040
Engineering, Planning, Surveying

SITE, UTILITY AND LANDSCAPE PLAN
NORTHWEST HOMES OFFICE BUILDING
OWNER/DEVELOPER: NORTHWEST HOMES ASSOCIATES
JAMES CITY COUNTY, VIRGINIA

Designed SOW	Drawn C.A.N.
Scale 1" = 20	Date MAY, 1989
Project No. 7291	
Drawing No. 1 OF 4	

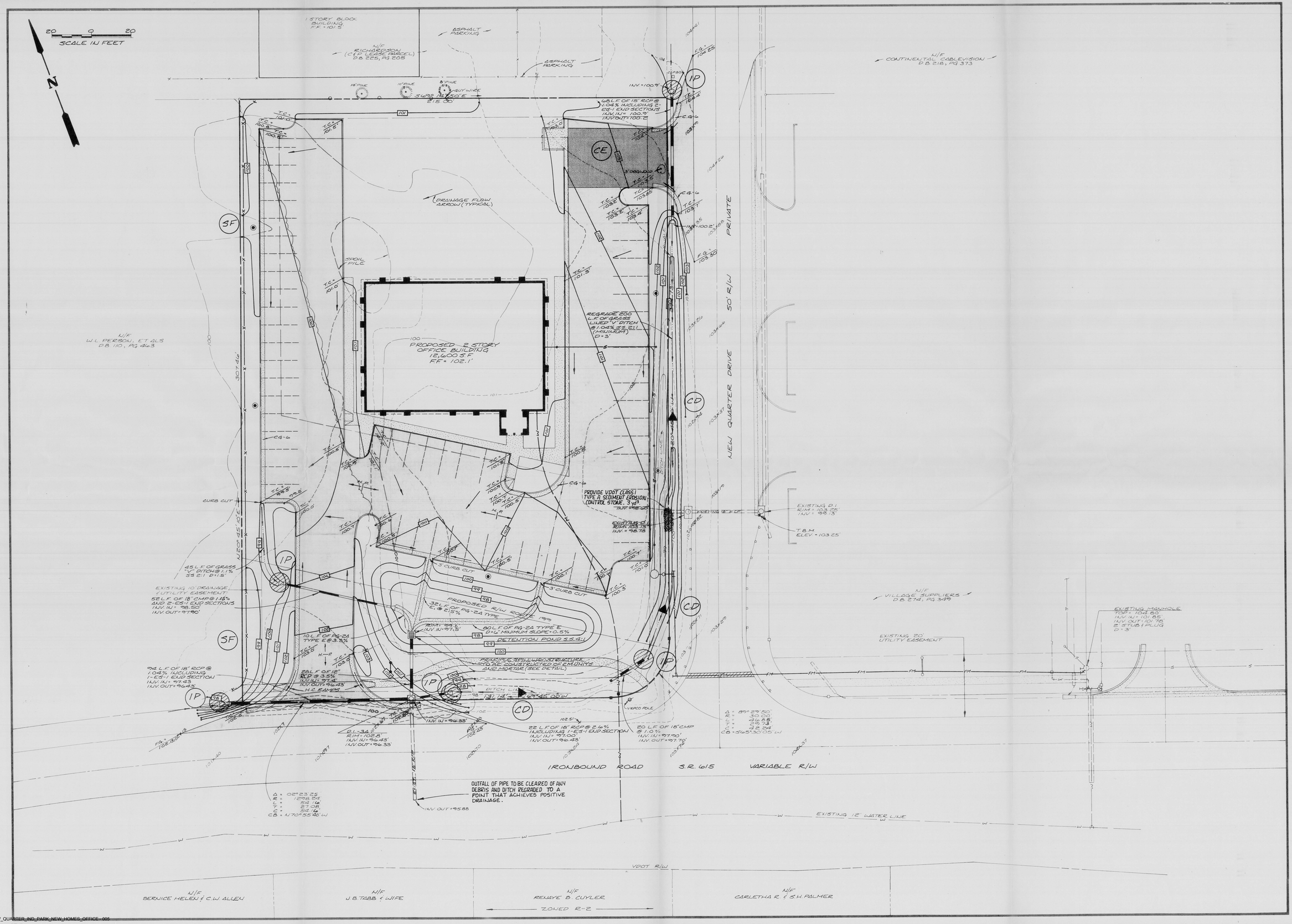

No.	DATE	REVISION / COMMENT / NOTE	BY
1	6/17/89	REVISED PER VDOT & PUBLIC WORKS.	SOW

COMMONWEALTH OF VIRGINIA
STEVEN O. WIGLEY
No. 019307
PROFESSIONAL ENGINEER

AES, a professional corporation
5248 Olde Towne Road, Suite 1
Williamsburg, Virginia 23185
(804) 253-0040
Engineering, Planning, Surveying

DRAINAGE, SEDIMENT AND EROSION CONTROL PLAN
NORTHWEST HOMES OFFICE BUILDING

OWNER/DEVELOPER: NORTHWEST HOMES ASSOCIATES

JAMES CITY COUNTY VIRGINIA

Designed SOW	Drawn C.A.N.
Scale 1" = 20	Date MAY, 1989
Project No. 7291	
Drawing No. 2 OF 4	

MC002_NEW_QUARTER_IND_PARK_NEW_HOMES_OFFICE - 005

EROSION AND SEDIMENT CONTROL NOTES

The purpose of the erosion control measures shown on these plans shall be to preclude the transport of all waterborne sediments resulting from construction activities from entering onto adjacent properties or State waters. If field inspection reveals the inadequacy of the plan to confine sediment to the project site, appropriate modifications will be made to correct any plan deficiencies.

1. All erosion and sediment control measures shall be installed and maintained in accordance with the "Virginia Erosion and Sediment Control Handbook". The contractor shall be thoroughly familiar with all applicable measures contained therein which may be pertinent to this project.

2. All points of construction ingress and egress shall be protected by a temporary construction entrance to prevent tracking of mud onto public right-of-ways. An entrance permit from VDOT is required prior to any construction activities within State right-of-ways.

3. Sediment basins and traps, perimeter dikes, sediment barriers and other measures intended to trap sediment on-site must be constructed as a first step in grading and be made functional before upslope land disturbance takes place. Earthen structures such as dams, dikes, and diversions must be seeded and mulched with 15 days of installation. An on-site pre-construction meeting will be held between the Department of Public Works and the Contractor to identify those measures to be initially installed.

4. Maintenance of all erosion and sediment control measures shall be accomplished in accordance with the "Virginia Erosion and Sediment Control Handbook". Maintenance will include the repair of measures damaged by any subcontractor including those of the public utility companies. At the pre-construction meeting, the contractor will supply Public Works with the name of the individual who will be responsible for ensuring maintenance of installed measures on a daily basis.

5. Surface flows over cut and fill slopes shall be controlled by either redirecting flows from transversing the slopes or by installing mechanical devices to safely lower water downslope without causing erosion. A temporary fill diversion (Std. & Spec. 1.16) shall be installed prior to the end of each working day.

6. Sediment control measures may require minor field adjustments at time of construction to insure their intended purpose is accomplished. Department of Public Works approval will be required for other deviations from the approved plans.

7. The contractor shall strip and pile topsoil at the locations shown on this plan or as directed by the engineer. Silt fence shall be placed at the toe of the stockpile after stripping of topsoil is complete.

8. The contractor shall complete drainage facilities within 30 days following completion of rough grading at any point within the project. The installation of drainage facilities shall take precedence over all underground utilities. Outfall ditches from drainage structures shall be stabilized immediately after construction of same. This includes installation of erosion control stone where required. Any drainage outfalls required for a street must be completed before street grading begins.

9. Permanent or temporary soil stabilization must be applied to all denuded areas within 15 days after final grade is reached on any portion of the site. Soil stabilization must also be applied to denuded areas which may not be at final grade but will remain dormant (undisturbed) for longer than 30 days. Soil stabilization measures include vegetative establishment, mulching and the early application of gravel base material on areas to be paved.

10. No more than 300' of sanitary sewer, storm sewer, or waterlines are to be open at one time. Following installation of any portion of these items, all disturbed areas are to be immediately stabilized (i.e., the same day).

11. If disturbed area stabilization is to be accomplished during the months of December, January, or February, stabilization shall consist of mulching in accordance with Specification 1.75. Seeding will then take place as soon as the season permits.

12. The term Seeding, Final Vegetative Cover or Stabilization, on this site plan shall mean the successful germination and establishment of a stable grass cover from a properly prepared seedbed containing the specified amounts of seed, lime, and fertilizer in accordance with Specification 1.66, Permanent Seeding. Irrigation shall be required as necessary to ensure establishment of grass cover.

13. All slopes steeper than 3:1 shall require the use of erosion control blankets such as excelsior blankets to aid in the establishment of a vegetative cover. Installation shall be in accordance with Specification 1.75, Mulching and Manufacturer's Instructions.

14. Inlet protection in accordance with Specification 1.08 shall be provided for all storm drain inlets as soon as practical following construction of same.

15. Temporary liners, such as polyethylene sheets, shall be provided for all paved ditches until the permanent concrete liner is installed.

16. Paved ditches shall be required wherever erosion is evident. Particular attention shall be paid to those areas where grades exceed 3%.

17. Temporary erosion control measures are not to be removed until all disturbed areas are stabilized. After stabilization is complete, all measures shall be removed within 30 days. Trapped sediment shall be spread and seeded.

18. Off-site waste or borrow areas shall be approved by James City County prior to the import of any borrow or export of any waste to or from the project site.

19. All paved and/or piped outfalls will be constructed before road grading and utility installation begins.

ersdnote.bls

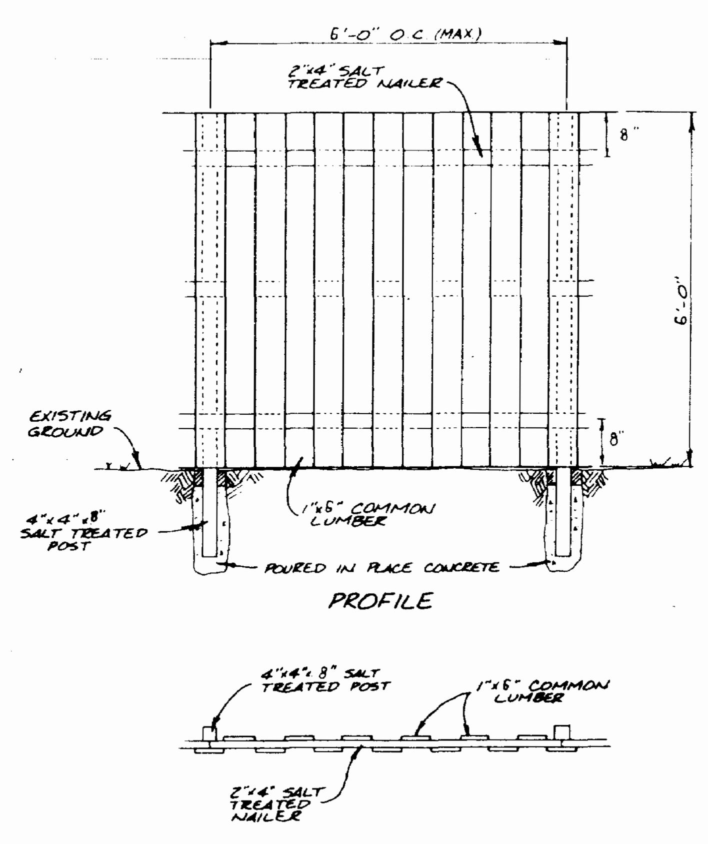

6' WOOD FENCE DETAIL

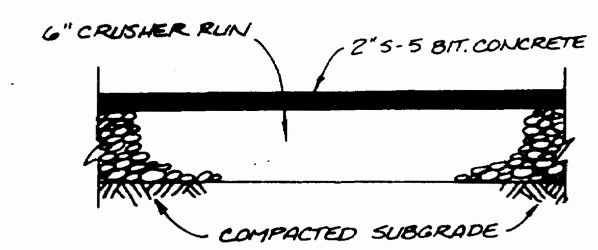

TYPICAL PAVEMENT SECTION

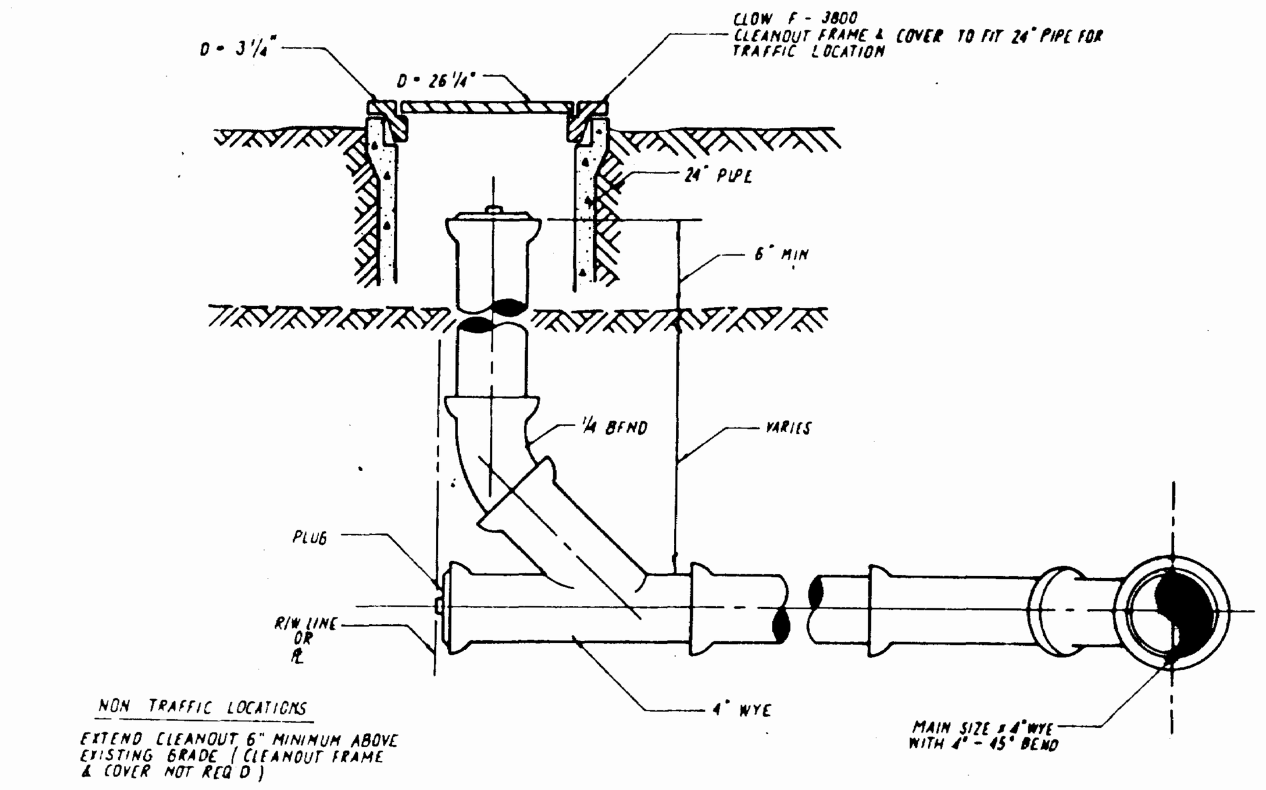

CLEANOUT STANDARD

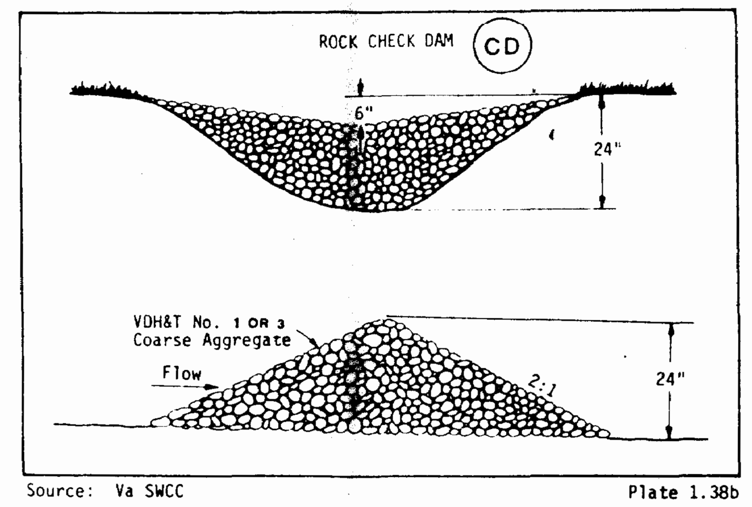

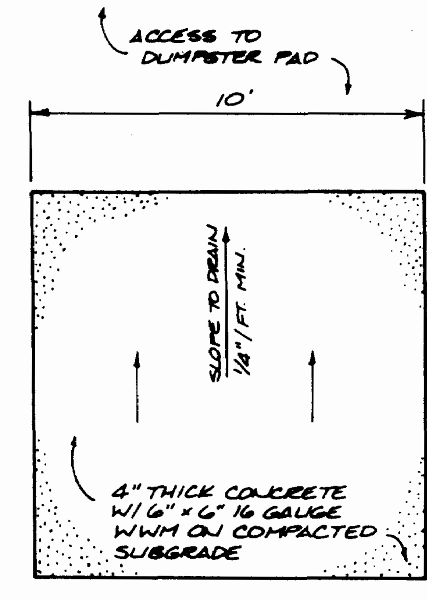

DUMPSTER PAD DETAIL

SCALE: 1" = 4'

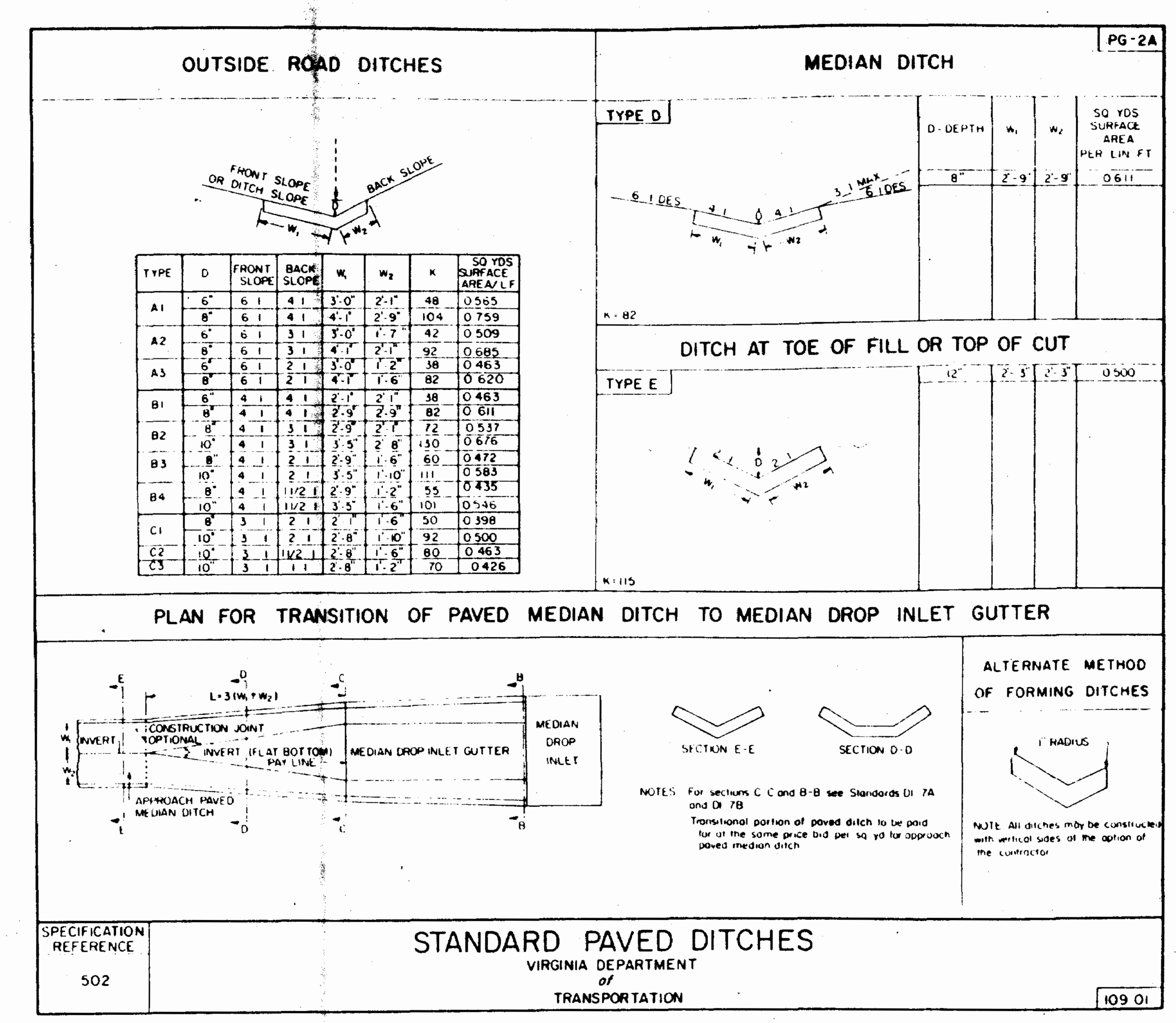

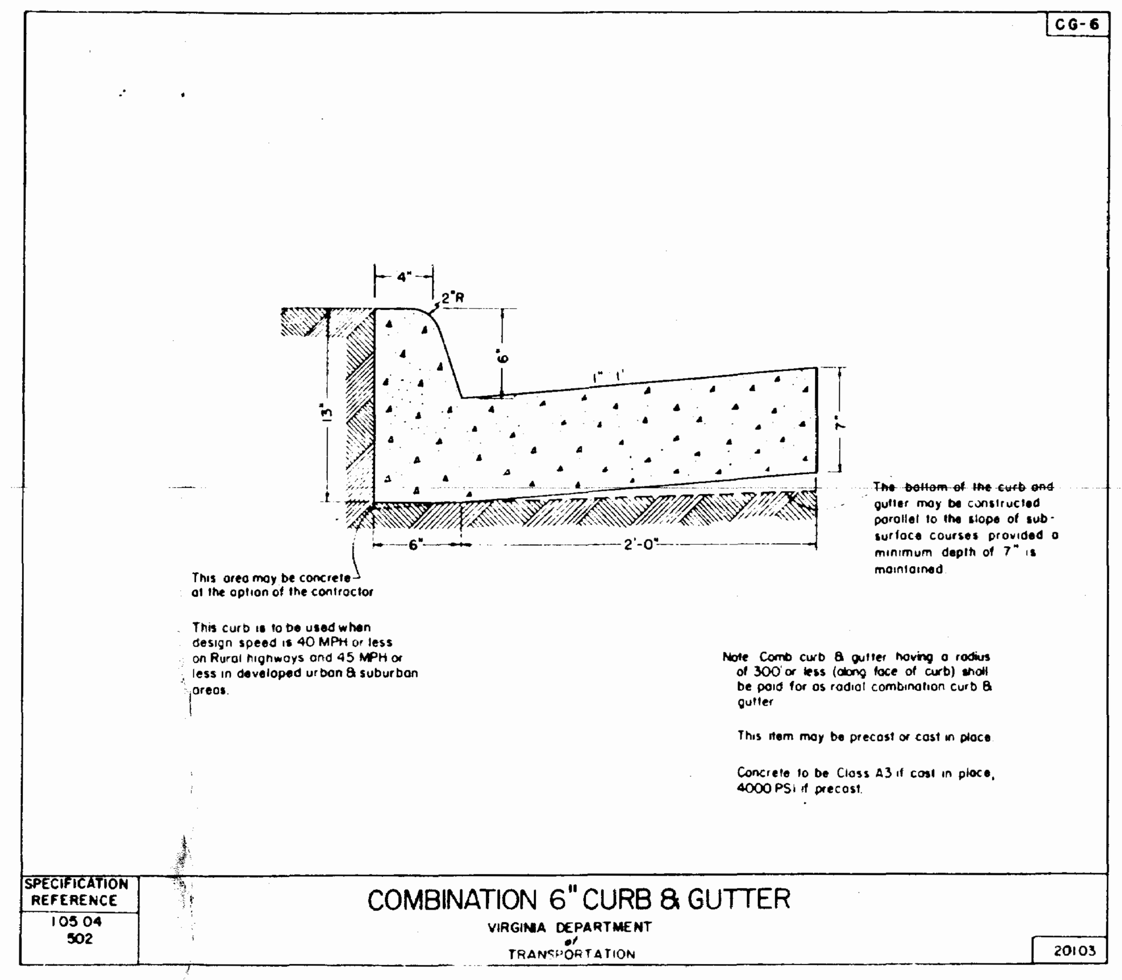

COMBINATION 6" CURB & GUTTER

VIRGINIA DEPARTMENT OF TRANSPORTATION

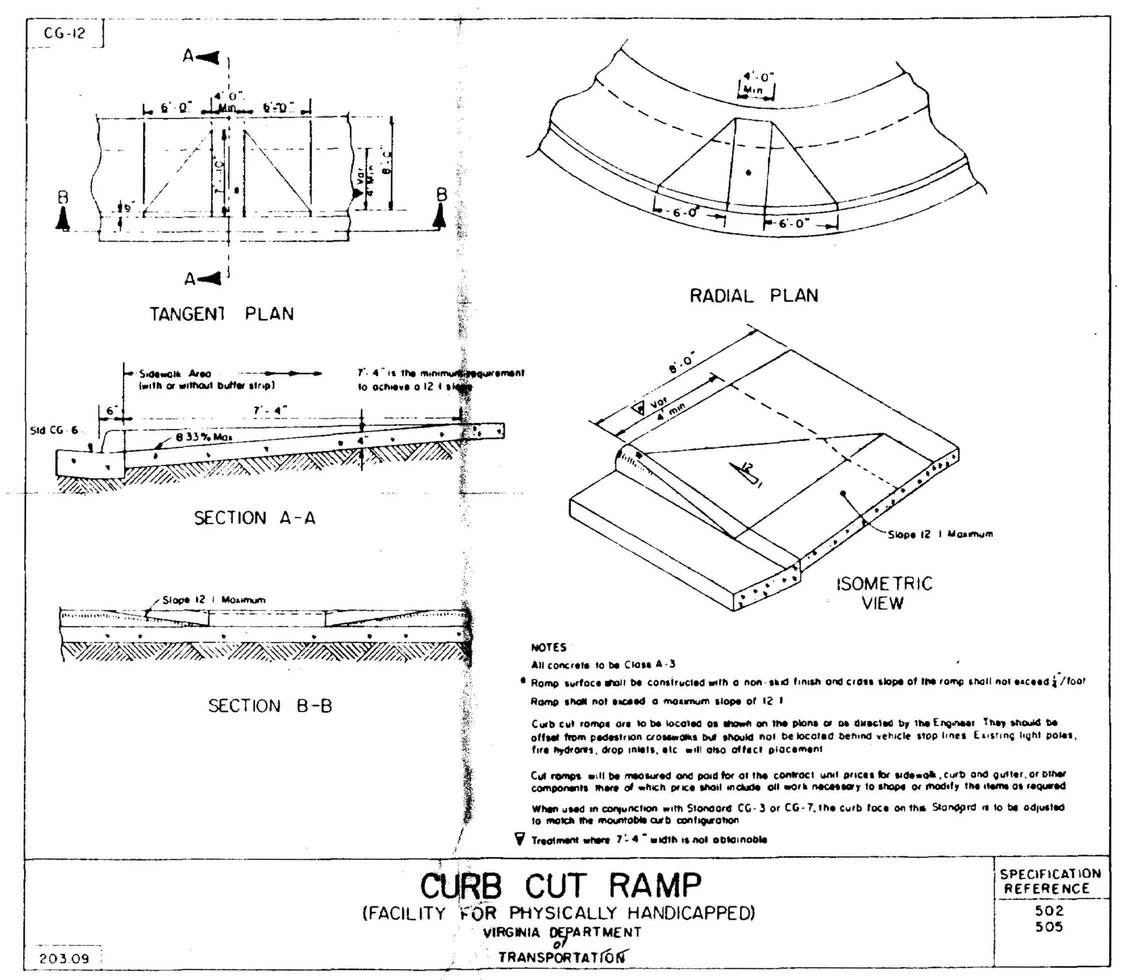

CURB CUT RAMP

(FACILITY FOR PHYSICALLY HANDICAPPED)

VIRGINIA DEPARTMENT OF TRANSPORTATION

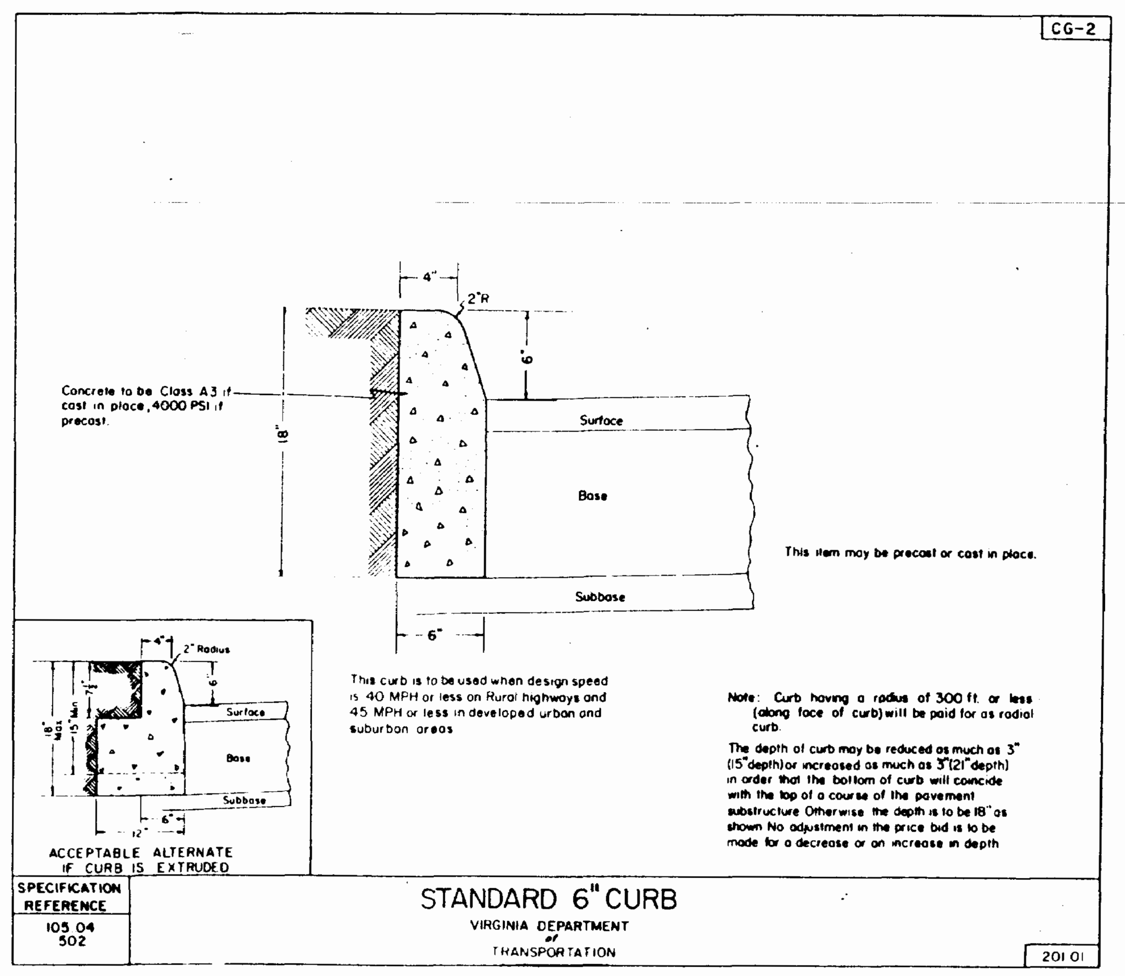

STANDARD 6" CURB

VIRGINIA DEPARTMENT OF TRANSPORTATION

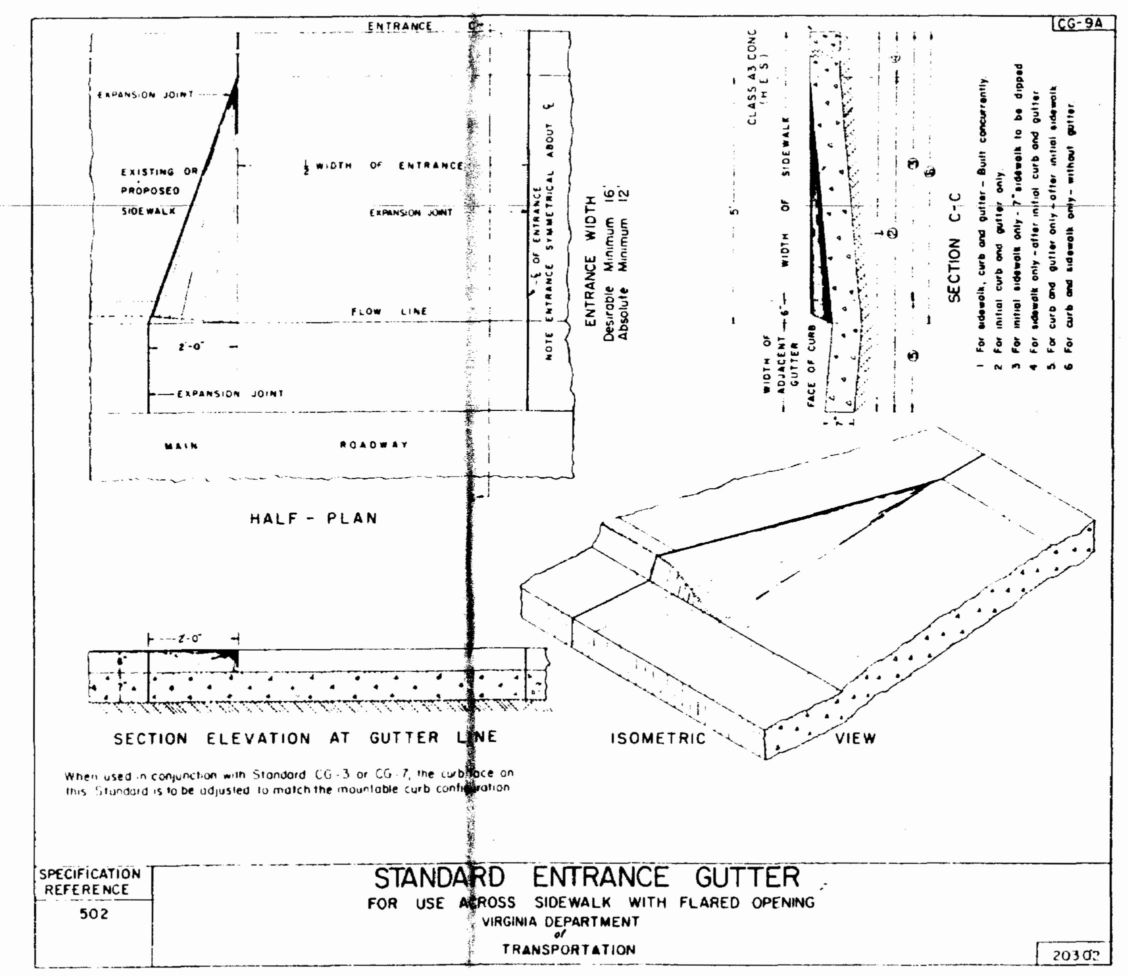

STANDARD ENTRANCE GUTTER

FOR USE ACROSS SIDEWALK WITH FLARED OPENING

VIRGINIA DEPARTMENT OF TRANSPORTATION

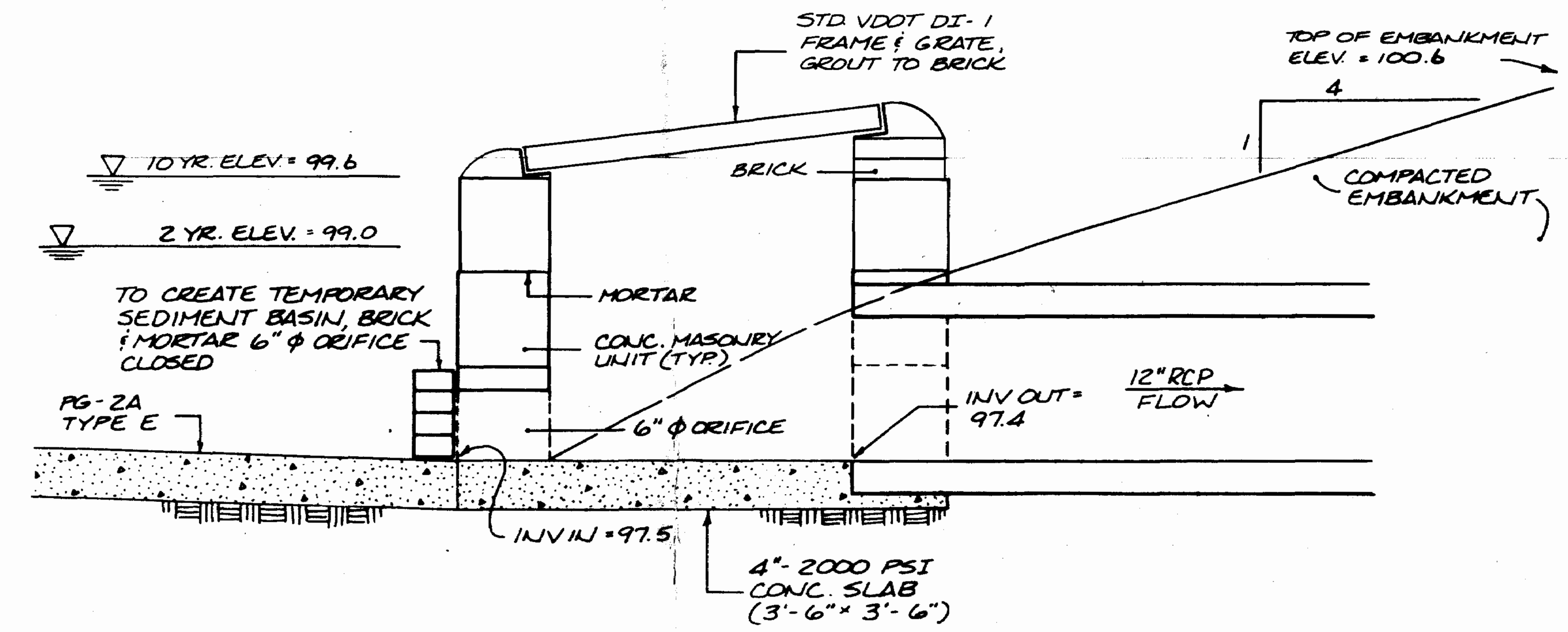

PRINCIPLE SPILLWAY STRUCTURE DETAIL

SCALE: 1" = 1' HORIZ.
1" = 1' VERT.

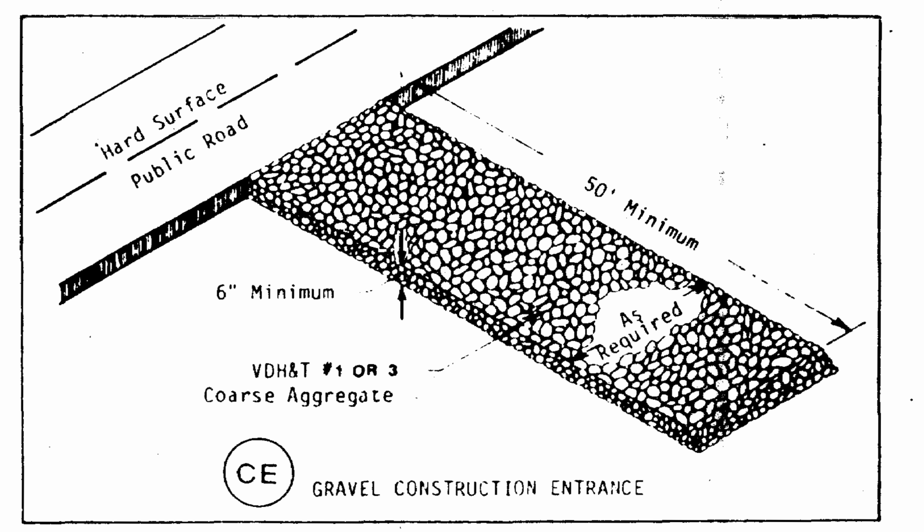

GRAVEL CONSTRUCTION ENTRANCE

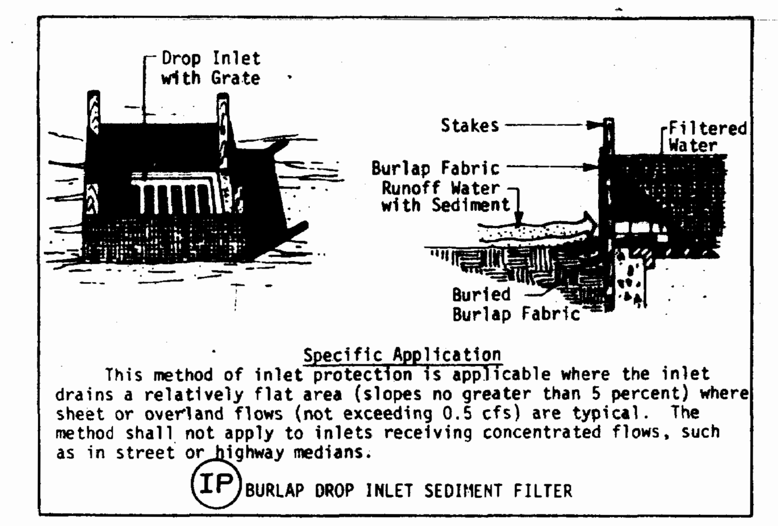

BURLAP DROP INLET SEDIMENT FILTER

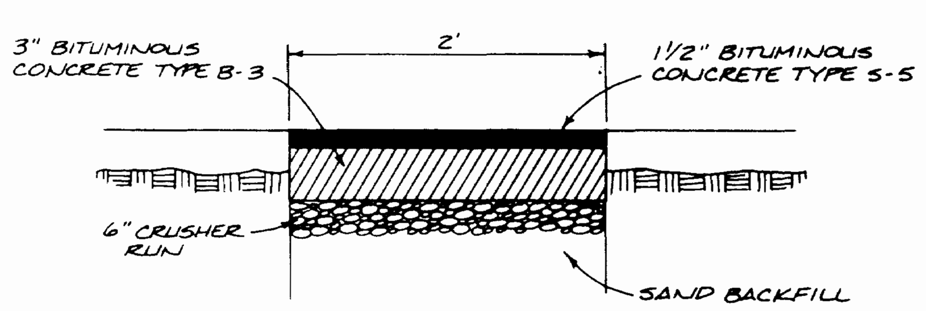

OPEN CUT RESTORATION DETAIL

N.T.S.

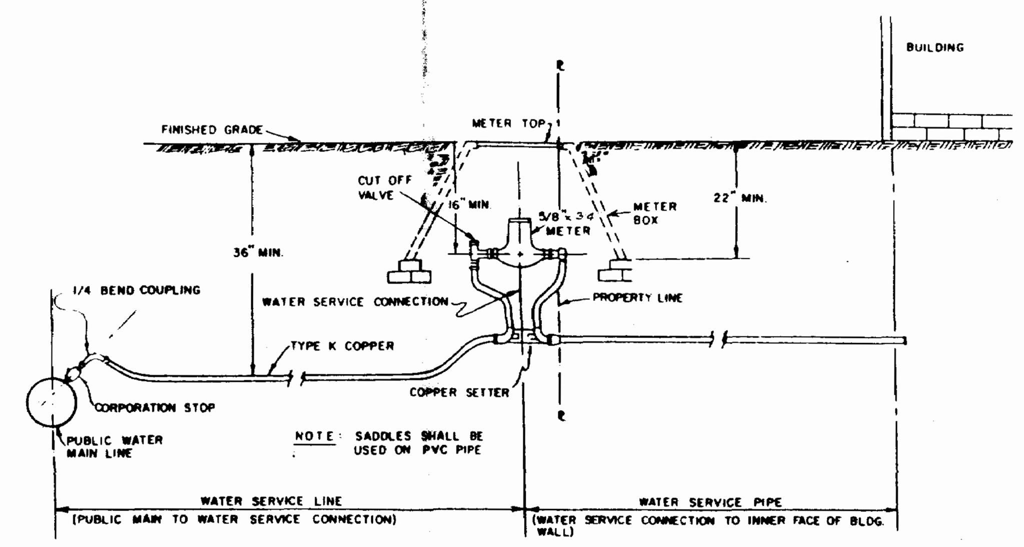

TYPICAL WATER SERVICE

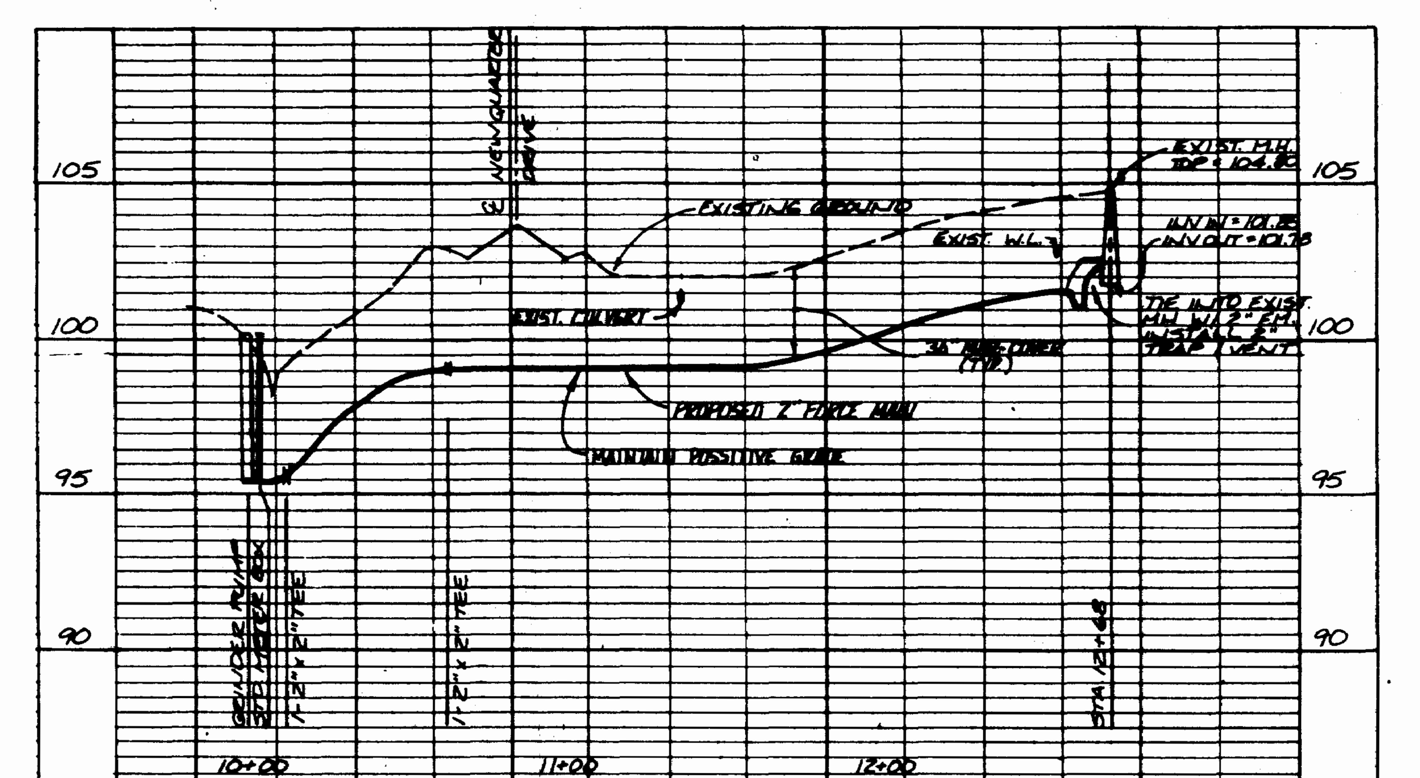

FORCE MAIN PROFILE

SCALE: 1" = 50' HORIZ.
1" = 5' VERT.

No.	DATE	REVISION / COMMENT / NOTE	BY
1	6/7/89	REVISED PER VDOT & PUBLIC WORKS	SOW

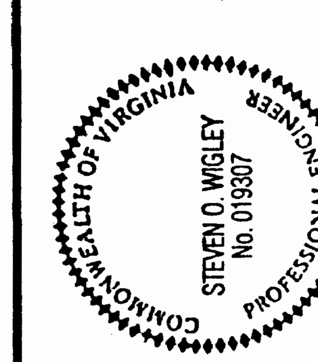

AES, a professional corporation
5248 Olde Towne Road, Suite 1
Williamsburg, Virginia 23185
(804) 253-0040
Engineering, Planning, Surveying

NOTES AND DETAILS

NORTHWEST HOMES OFFICE BUILDING

OWNER/DEVELOPER: NORTHWEST HOMES ASSOCIATES

JAMES CITY COUNTY · VIRGINIA

Designed	Drawn RMS
Scale	Date MAY, 1989
Project No. 7291	
Drawing No. 3 of 4	

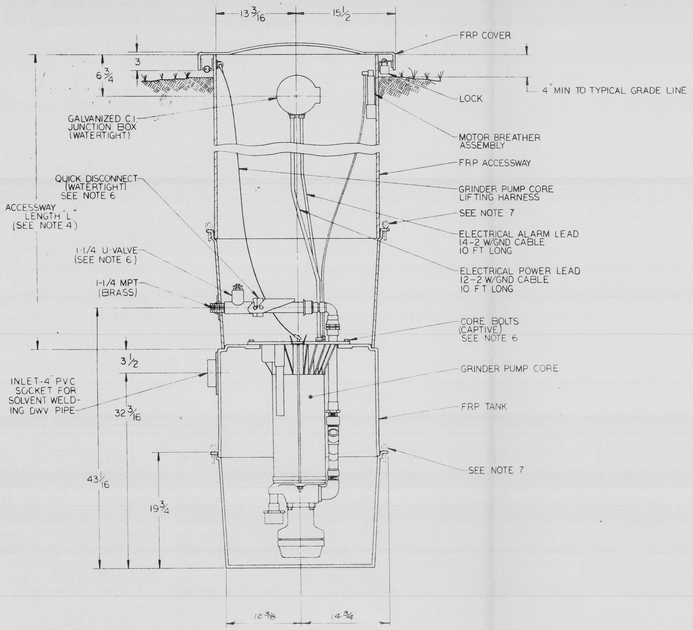

NOTES:
1. ALL DIMENSIONS IN INCHES UNLESS OTHERWISE NOTED.
2. DO NOT SCALE DRAWING.
3. DISCHARGE LINE TO BE 48" BELOW FROST LINE.
4. SERIES 2 : L = 18
   SERIES 6 : SPECIFY L REQ'D. AVAILABLE FROM 3' TO 10' IN ONE FOOT INCREMENTS.
5. ALL JOINTS IN TANK AND ACCESSWAY ARE MANUFACTURED AND FACTORY TESTED FOR WATERTIGHT INTEGRITY.
6. CORE BOLTS CAN BE REMOVED AND U-VALVE & QUICK DISCONNECT CAN BE OPERATED FROM GRADE USING 1" HEX WRENCH (FURNISHED).
7. FOUR (4) LIFTING EYES PROVIDED. LOCATION WILL DEPEND UPON ACCESSWAY LENGTH.
8. ALL DIMENSIONS & SPECIFICATIONS SUBJECT TO CHANGE WITHOUT NOTICE.
9. ALL FRP PARTS TO BE AVOCADO GREEN.

GRINDER PUMP DETAILS

N.T.S.

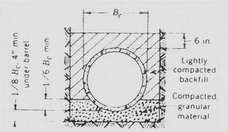

Granular bedding, load factor 1.5

CLASS C BEDDING DETAIL

GRINDER PUMP MODEL GP 210

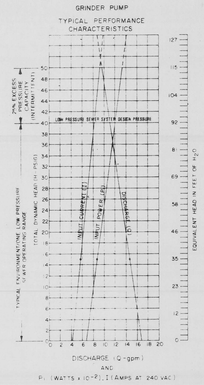

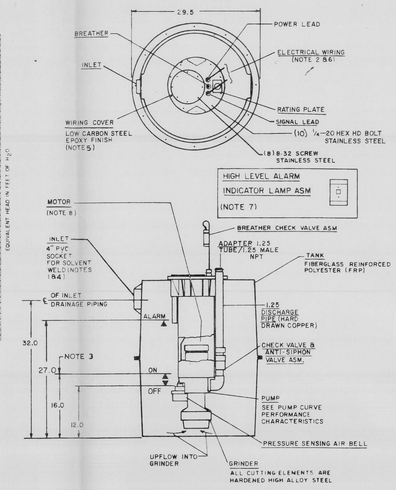

NOTES:
1. Can be adapted to any system of DWV piping dictated by local codes including cast iron, copper and non-metallics.
2. Use Fittings appropriate for wiring material which should be per applicable codes. All fittings must be water-tight.
3. Exact turn-on level depends on in-flow rate during time delay interval after pressure switch closes.
4. Interior of tank (wet well) is vented through inlet drainage piping per installation instructions.
5. Cover is suitably gasketed and bolted in order to make weather tight.
6. Ten feet of type UF cable, prewired and connected with water-tight wiring connections, is provided for both power and signal connections. Other lengths of materials available on special order. See note 2.
7. High level alarm indicator lamp assembly furnished on wall plate 2¾ x 4¾ inches. Fits standard wall box (by others). Install at most obvious location on premises and connect per wiring diagram in installation instructions. Audible alarm (not furnished) may be paralleled with circuit. Lamp signal circuit contact rating is 15 amp at 120 vac.
8. One horsepower, single phase, capacitor-start induction motor with integral automatic reset thermal overload protection. 240 volt, 60 hertz.
9. All dimensions are in inches. Do not scale drawing.
10. Specifications and drawings are subject to change without notice.

ENVIRONMENT/ONE
MODEL FARRELL GP-210

DESIGNED FOR A BROAD VARIETY OF APPLICATIONS WHERE FLOWS RANGE UP TO 500 gpd. CAN PUMP DOMESTIC WASTEWATER MORE THAN A MILE THROUGH 1¼ INCH PVC PRESSURE PIPE OR PROVIDE LIFTS UP TO 80 FEET.

PUMP	SEMI-POSITIVE DISPLACEMENT TYPE; 15 gpm @ 0 FT TDH; 11 gpm @ 81 FT TDH; EASILY HANDLES TEMPORARY LOADS 40% ABOVE THE 81 FT NOMINAL DESIGN HEAD
TANK	60 GAL; NON-CORROSIVE, HEAVY-DUTY, REINFORCE FIBER-GLASS; SUITABLE FOR INDOOR USE; INTEGRAL FIBERGLASS ACCESS WAYS AVAILABLE FOR A VARIETY OF OUTDOOR APPLICATIONS
GRINDER	TWO HARDENED STAINLESS STEEL CUTTERS ROTATING AT MOTOR SPEED IN PRECISION RELATIONSHIP TO HARDENED ALLOY SHEDDING RING PRODUCE A FINELY DIVIDED SLURRY
PIPING CONNECTIONS	INLET FOR 4 INCH DWV PIPE; DISCHARGE IS 1¼ INCH MPT
MOTOR	1 HP, 1725 RPM, HIGH- TORQUE, CAPACITOR-START, 240 VOLT, 60 HERTZ, 8 AMP, 1 PHASE; WITH INTEGRAL, AUTOMATIC RESET, THERMAL PROTECTOR
CONTROLS	NON-FOULING STATIC SENSOR AND PRESSURE SWITCH SYSTEM HAS NO MOVING PARTS IN CONTACT WITH SEWAGE; COMPLETELY SELF-CONTAINED -- NO EXTERNAL PANELS NEEDED
CHECK VALVES	TWO PROVIDED: ONE INTEGRAL ON DISCHARGE PIPE INSIDE TANK, ONE FOR SEWER SYSTEM USE BETWEEN PRESSURE MAIN AND GRINDER PUMP; FULL-PORTED. NON-CLOGGING, CLOPPER TYPE
ANTI-SIPHON VALVE	INTEGRAL ON DISCHARGE PIPE INSIDE TANK
ALARM	HIGH LEVEL INDICATOR LIGHT FURNISHED FOR REMOTE DISPLAY. REMOTE DISPLAY WITH AUDIBLE ALARM TO BE PROVIDED. ALARM SYSTEM TO BE PROVIDED WITH BACK-UP POWER SUPPLY.

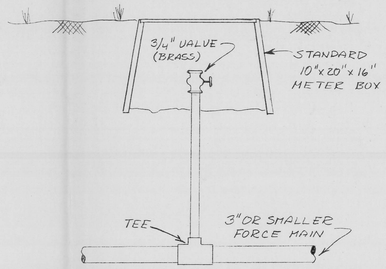

MANUAL AIR RELEASE VALVE

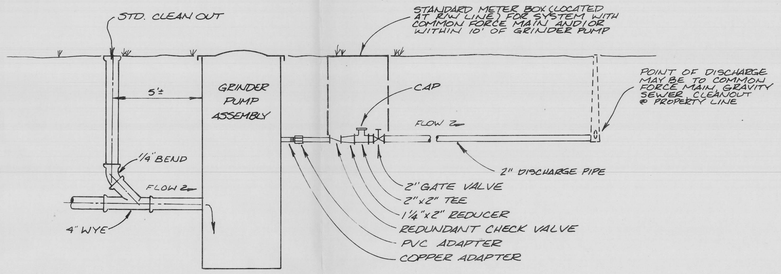

TYPICAL PIPING INSTALLATION

N.T.S.

GRINDER PUMP FORCE MAIN PIPING

1. MATERIALS - SCHEDULE 40 PVC PIPE (ASTM D 2665) OR CLASS 160 PVC PIPE (ASTM D 2241).
2. JOINTS -
   A. SCHEDULE 40 SOLVENT WELDED JOINTS SHALL BE MADE IN ACCORDANCE WITH MANUFACTURER'S RECOMMENDATIONS OR IN ACCORDANCE WITH ASTM D 1855.
   B. CLASS 160 PIPE SHALL BE GASKETED JOINTS. RUBBER GASKET SHALL BE IN ACCORDANCE WITH ASTM 1869.
3. THRUST RESTRAINT SHALL BE PROVIDED FOR GASKETED TYPE PIPING AT ALL BENDS, TEES AND CHANGES OF DIRECTION. ONE CUBIC FOOT THRUST BLOCKS SHALL BE PROVIDED FOR LINES THREE INCHES AND SMALLER.
4. FORCE MAIN PIPING SHALL BE TESTED AT 50 PSI FOR 30 MINUTES. LEAKAGE SHALL NOT EXCEED:

$$L = \frac{ND(P)^{1/2}}{3700}$$

   WHERE L = ALLOWABLE LEAKAGE IN GPH
   N = NUMBER OF JOINTS
   D = PIPE DIAMETER IN INCHES
   P = TEST PRESSURE IN PSI

5. PROVIDE BEDDING CLASS B AS SHOWN IN DETAIL ON THIS SHEET.

GRINDER PUMP ELECTRICAL NOTES

1. POWER COMES FROM THE MAIN PANELBOARD LOCATED IN THE BUILDING.
2. ONE 20 AMP, 240 VOLT, SINGLE PHASE ELECTRICAL CIRCUIT IS PROVIDED FOR THE PUMP AND CONTROLS (120 VOLTS).
3. A DISCONNECT SHALL BE PROVIDED ADJACENT TO THE PUMP PER NEC CODE. THE PUMP CONTROLS ARE LOCATED IN THE TOP HOUSING OF THE CORE UNIT INSIDE A WATERPROOF ACCESS COVER. ALTERNATELY THEY CAN BE LOCATED ADJACENT TO THE DISCONNECT, IN A NEMA 4X BOX (WATERTIGHT AND CORROSION RESISTANT).
4. ALL ELECTRICAL EQUIPMENT MUST BE UL LISTED.
5. ALL EQUIPMENT SHALL BE TESTED IN ACCORDANCE WITH THE NEC.

AES, a professional corporation
1761 Jamestown Road, Williamsburg, Va. 23185
804-253-0040
Architecture, Engineering, Surveying, Planning

STANDARD GRINDER PUMP NOTES & DETAILS

COMMONWEALTH OF VIRGINIA
STEVEN O. WIGLEY
No. 019307
PROFESSIONAL ENGINEER

No	DATE	REVISION / COMMENT / NOTE	BY
2	2/20/86	REVISED TYPICAL PIPING INSTALLATION	RKS
1	10/28/85	ADDED TYPICAL PIPING INSTALLATION	RKS

Designed	Drawn
Scale N.T.S.	Date 9/83
Project No. 7291	
Drawing No. 4 OF 4	

MC002_NEW_QUARTER_IND_PARK_NEW_HOMES_OFFICE - 007

#7291
5-23-89
S.P.W.

Drainage Calculations
Northwest Homes Office Bldg SP-65-89
Detention Pond Calc.st

Pre-development

D.A. = 1.5 Ac.
C = 0.3 (Woodlands and bare packed soil w/ grattes

Length = 155 ft (Overland Flow) ΔElev. = 103.7 - 99 = 4.7 S = 3.0%
T_c = 1.5 min.
Length = 225 ft (Channel Flow) ΔElev. = 99 - 97.5 = 1.5 S = 0.7%
T_c = 3.5 min

T_c = 18 min.

I_2 = 3.3 in/hr. , Q_2 = 1.5 cfs
I_{10} = 5.2 in/hr. , Q_{10} = 2.3 cfs

Post-development

D.A. = 1.5 Ac. t_c: L = 260 ft ΔElev. = 2.7 S = 1.%
t_c = 5 min.

Composite "C" Value

	Area	c	CA
Pavement	0.63	0.9	0.57
Bldg.	0.15	0.85	0.13
Grass	0.72	0.2	0.14
	1.5		0.84

$C = 0.84/1.5 = 0.56$

Critical Storm Duration For 2yr. Post-Dev.

$$T = \sqrt{\frac{2CA_a(b - t_c/4)}{q_o}} - b$$

given: C = 0.56
A = 1.5 Ac.
t_c = 5 min.
a_2 = 130.3 (Richmond constant)
b_2 = 18.5 (same)
q_o = 1.5 cfs

$$T_c = \sqrt{\frac{2(0.56)1.5(130.3)\ (18.5 - 5/4)}{1.5}} - 18.5$$

T_c = 31.7 min.

Peak Inflow

$$Q_o = CA\left(\frac{a}{b + T_c}\right) = 0.56(1.5)\left(\frac{130.3}{18.5 + 31.7}\right) = 2.18 \text{ cfs}$$

Required Storage for Critical 2yr. Storm

$$V = \left(Q_o T_c + \frac{Q_o t_c}{4} - \frac{q_o T_c}{2} - \frac{3 q_o t_c}{4}\right) 60$$

$$= \left(2.18(31.7) + \frac{2.18(5)}{4} - \frac{1.5(31.7)}{2} - \frac{3(1.5)5}{4}\right) 60$$

= 3846 cf = 0.09 Ac ft

Critical Storm Duration For 10yr. Post-Dev.

$$T_c = \sqrt{\frac{2(0.56)1.5(189.2)(22.1-5/4)}{2.3}} - 22.1$$

$= 31.6$ min.

given: $C = 0.56$
$A = 1.5$ Ac.
$t_c = 5$ min
$a_{10} = 189.2$
$b_{10} = 22.1$
$q_o = 2.3$ cfs

Peak Inflow

$$Q_o = 0.56(1.5)\left(\frac{189.2}{22.1+31.6}\right) = 3.0 \text{ cfs}$$

Required Storage For Critical 10yr. Storm

$$V = \left(3.0(31.6) + \frac{3.0(5)}{4} - \frac{2.3(31.6)}{2} - \frac{3(2.3)5}{4}\right)60$$

$= 3215$ ft^3 $= 0.07$ Ac.-ft.

Elev. (ft.)	Area (ft^2)	Avg. Area (ft^2)	Depth (ft)	Incremental Vol. (ft^3)	ΣVol. (ft^3)
97.5	0				0
		880	0.5	440	
98.0	1761				440
		2233	1	2233	
99.0	2705				2673
		3266	1	3266	
100.0	3827				5939

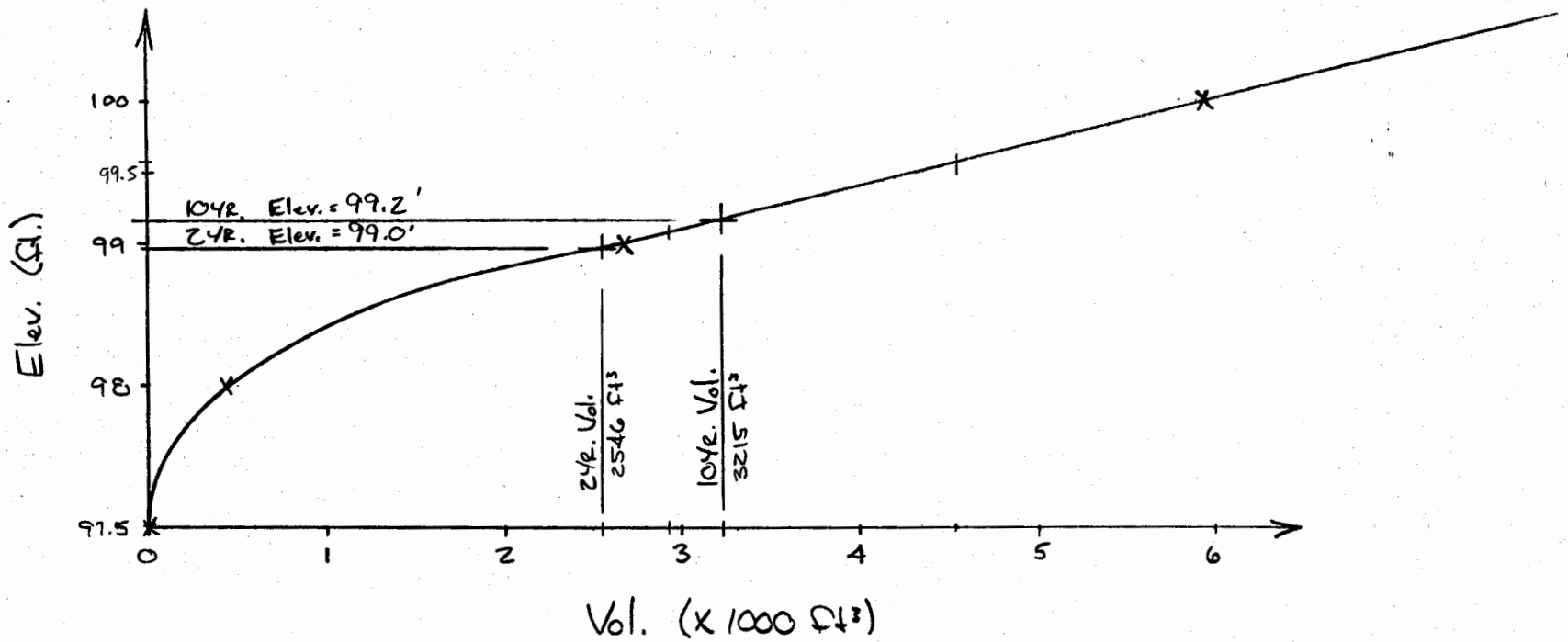

Outlet Structure

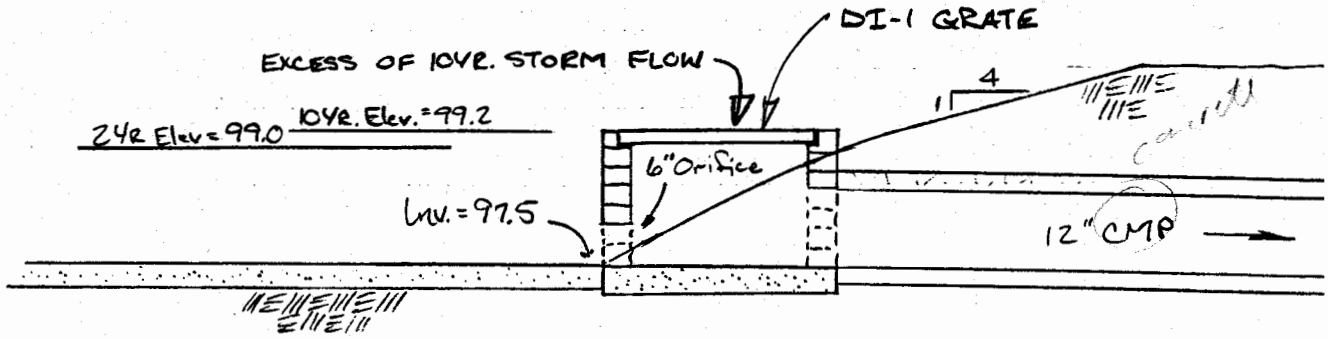

24R. Primary Discharge Orifice Sizing

$$Q = a\, 0.62 \sqrt{2gh}$$

given: a = area of orifice (ft^2)
g = 32.2 ft/s
h = head

Try 6" dia., a = 0.1963 S.F.
h = 1.5 ft

$$Q_2 = 0.1963(0.62)\sqrt{2(32.2)1.5} = 1.2 \text{ cfs} < 1.5 \text{ cfs}$$ **GOOD**

10 YR. Storm Discharge

$$Q_{10} = 0.1963(0.62)\sqrt{2(32.2)1.7} = 1.3 \text{ cfs} < 2.3 \text{ cfs}$$ **GOOD**

In excess of the 10yr. storm event flow will spill into the top of the structure via a DI-1 VDOT ST'D grate.

Note: To create a temporary sediment basin the 6" dia. orifice shall be brick and mortared shut.

2 Yr. @ 1.2 cfs - need 2920 ft^3 → elev 99.1
10 Yr @ 1.3 cfs - need 4540 ft^3 → elev 99.6

12" RCP - 6.9 cfs @ 3.7%
12" CMP - 3.5 cfs

Q [illegible] @ 10 min = 4.9 cfs

Bump That is
The Closest To
This Address

4010 Montbrook