CERTIFICATE OF AUTHENTICITY

THIS IS TO CERTIFY THAT THE FOLLOWING ELECTRONIC RECORDS ARE TRUE AND ACCURATE REPRODUCTIONS OF THE ORIGINAL RECORDS OF JAMES CITY COUNTY GENERAL SERVICES DEPARTMENT- STORMWATER DIVISION; WERE SCANNED IN THE REGULAR COURSE OF BUSINESS PURSUANT TO GUIDELINES ESTABLISHED BY THE LIBRARY OF VIRGINIA AND ARCHIVES; AND HAVE BEEN VERIFIED IN THE CUSTODY OF THE INDIVIDUAL LISTED BELOW.

BMP NUMBER: **MC010**

DATE VERIFIED: **January 9, 2013**

QUALITY ASSURANCE TECHNICIAN: **Leah Hardenbergh**

Leah Hardenbergh

LOCATION: WILLIAMSBURG, VIRGINIA

Stormwater Division

MEMORANDUM

Date: March 29, 2012

To: Michael J. Gillis, Virginia Correctional Enterprises Document Management Services

From: Leah Hardenbergh

PO: 110426

Re: Files Approved for Scanning

General File ID or BMP ID: **MC010**

PIN: **3842100001A**

Owner Name (if known): **VASS MEADOWS**

Legal Property Description: **COMMON AREA VASS MEADOWS**

Site Address: **3926 VASS LANE**

(For internal use only):

Box # 3

Agreements (in file as of scan date): N Book or Doc #:

MC-010

Contents for Stormwater Management Facilities As-built Files

Each file is to contain:

1. As-built plan
2. Completed construction certification
3. Construction Plan
4. Design Calculations
5. Watershed Map
6. Maintenance Agreement
7. Correspondence with owners
8. Inspection Records
9. Enforcement Actions

A F 39820A 8

NOTE: VDOT IS NOT RESPONSIBLE FOR MAINTENANCE OF DETENTION PONDS.

4.3 ACRES NATURAL OPEN SPACE

POND #1 — 78 SQ YDS. RIP RAP D50=0.50

POND #2 — EMERGENCY SPILLWAY #2, RIP RAP, PRINCIPAL SPILLWAY #2 SEE DETAIL SHEET 3

POND #2 TO BE DELETED.

EMERGENCY SPILLWAY #1, RIP RAP, PRINCIPAL SPILLWAY #1 SEE DETAIL SHEET 4

PROPOSED M.H. #1 — RIM: 60.5 — INV IN: 52.50 — INV OUT: 52.29 — MATCH EX. JCT.

PROPOSED M.H. #2

PROPOSED M.H. #3 — RIM: 63.5± — INV IN: 54.70 — INV OUT: 54.60

PROPOSED M.H. (DROP) #4 — RIM: 65.5± — INV. IN: 62.00 — INV. OUT: 55.64

PROPOSED M.H. #5 — RIM: 79.75 — INV. IN: 71.50 — INV. OUT: 71.40

PROPOSED M.H. #6 — RIM: 88.8 — INV. IN: 78.95 — INV. OUT: 78.85

PROPOSED M.H. #7 — RIM: 92.4 — INV: 85.95

PROPOSED M.H. #10 — RIM: 80.5 — INV. IN: 75.44 — INV. OUT: 75.34

PROPOSED M.H. #11 — RIM: 80.00 — INV. IN: 74.44 — INV. OUT: 74.34

PROPOSED M.H. #12 — RIM: 80.90 — INV. IN: 74.94 — INV. OUT: 74.84

PROPOSED M.H. #13 — RIM: 83.8 — INV. IN: 70.00

D.I. 3C L=6' RIM=78.90 INV=74.84

D.I. 1 RIM=80.00 INV. IN=72.49 INV. OUT=72.24

D.I. 2 RIM=80.90 INV. IN=72.94 INV. OUT=72.84

D.I. 3 RIM=80.00 INV. IN=73.44 INV. OUT=73.34

D.I. 4 RIM=80.90 INV. IN=73.94 INV. OUT=73.84

D.I. 5 RIM=80.00 INV. IN=74.44 INV. OUT=74.34

D.I. 6 RIM=80.90 INV. IN=74.94 INV. OUT=74.84

D.I. 7 RIM=80.00 INV. IN=75.44 INV. OUT=75.34

D.I.

A F 39820A B

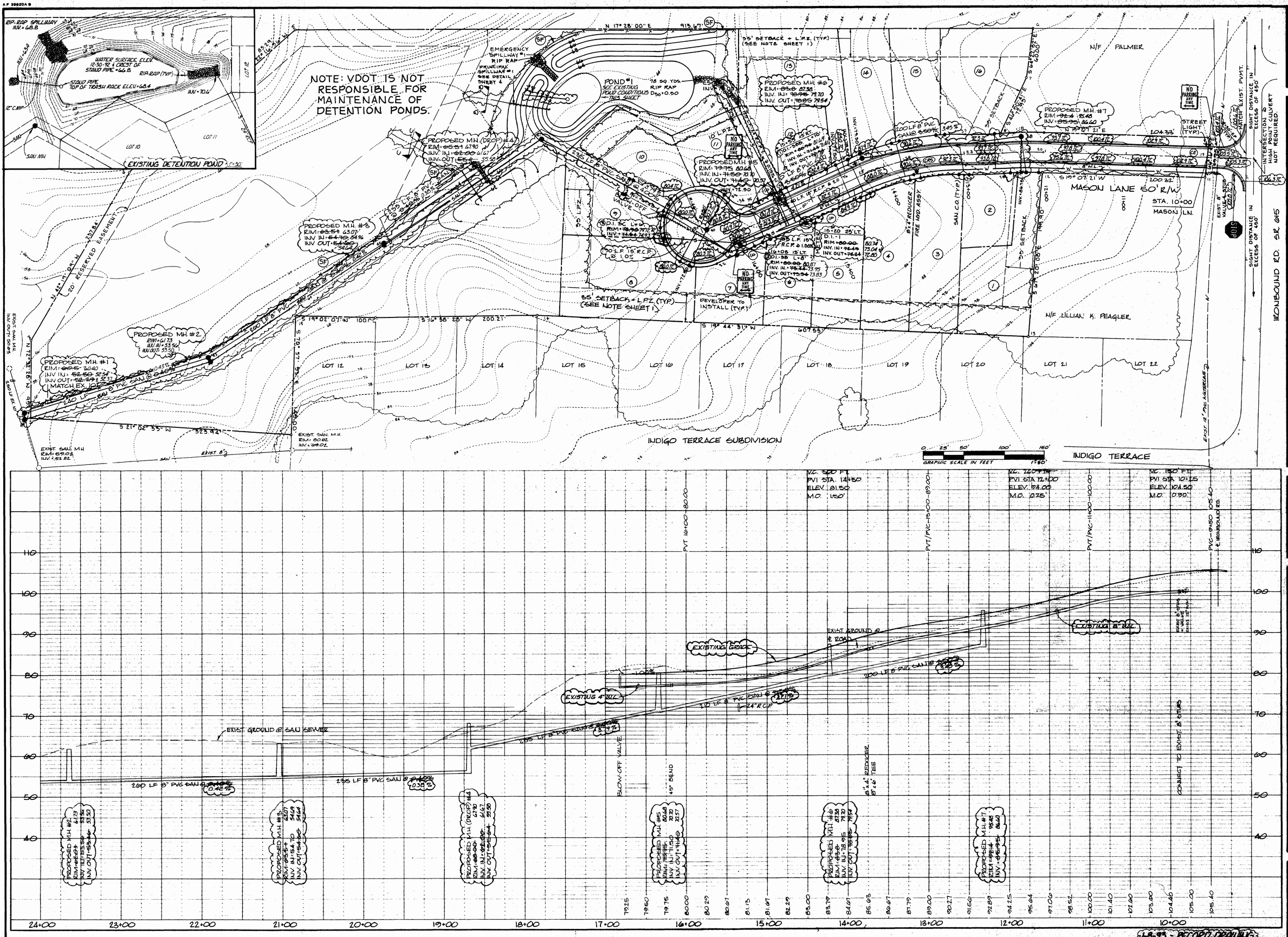

COMMONWEALTH OF VIRGINIA
STEPHEN A. ROMEO
No. 1448-B
LAND SURVEYOR

Langley and McDonald

A PROFESSIONAL CORPORATION

ENGINEERS • PLANNERS • SURVEYORS

VIRGINIA BEACH - WILLIAMSBURG, VIRGINIA

DES.	
DWN.	GSW
CHK.	SAR
DATE	1/8/93

ROSALIE ESTATES
SINGLE FAMILY CLUSTER DEVELOPMENT
IRONBOUND ASSOCIATES
JAMES CITY COUNTY, VIRGINIA
RECORD DRAWING
SUBDIVISION PLAN & PROFILES

PROJ. NO.	90-51
FLD. BK. NO.	
SHEET	2 OF 4
DWG.	3725 AW

L.& M. - RECORD DRAWING

MC010_COMMON_AREA_VASS_MEADOWS - 005

1. COVER SHEET
2. SUBDIVISION PLAN & PROFILES
3. PRELIMINARY PLAT & PROFILES
4. DETAIL SHEET

LEGEND

EXISTING		PROPOSED
SAN	SANITARY SEWER	SAN
W	WATER	W
S	STORM SEWER	S
E	ELECTRIC LINE	E
T	TELEPHONE	T
G	GAS LINE	G
TV	CABLE TV LINE	TV
FM	FORCE MAIN	FM
MH	MANHOLE	MH
CDI	CURB DROP INLET	CDI
YDI	YARD DROP INLET	YDI
CO	CLEANOUT	CO
FES	FLARED END SECTION	FES
	VALVE	
	WATER METER	
	FIRE HYDRANT	
	POWER POLE	
	LIGHT POLE	
	TELEPHONE PEDESTAL	
	TELEPHONE POLE	
	CEMENT CONCRETE	
	BITUMINOUS CONCRETE	
	CONCRETE CURB	
25.6	GROUND ELEVATION	25.6
25	GROUND CONTOUR	25
	PROJECT LIMITS	
	CENTERLINE/BASELINE	
	PROPERTY LINE	
	DITCH SWALE LINE	
	DIRECTION OF FLOW	
	TREE LINE	
	FENCE	
	BORING	
	BENCH MARK	

STATISTICAL DATA

AREA TABULATION

TOTAL AREA: 437,730 SQ. FT. (10.04 AC)
AREA OF LOTS: 156,998 SQ. FT.
RIGHT OF WAY: 37,935 SQ. FT. (9%)
OPEN SPACE: 226,000 SQ. FT.
LPZ AREA: 30,999 SQ. FT.

DENSITY CALCULATION

TOTAL PARCEL: 437,730 SQ. FT.
DEVELOPABLE AREA: 303,300 SQ. FT.
DENSITY: 16 LOTS ÷ 7 AC. : 2.3 UNITS PER ACRE

PRESENT ZONING: R-2

TAX MAP NO.-(39-4)(01-0-0014)

SETBACKS

FRONT: 20' (LOTS 1-6, 8-16)
15' (LOT 7)
SIDE: 5' (OR AS SHOWN)
REAR: 10' (OR AS SHOWN)

LANDSCAPE PROTECTION ZONE (L.P.Z.)

In areas designated Landscape Protection Zone (L.P.Z.) no trees may be cut regardless of size and no permanent structures to include houses, decks, patios, pools, garages, posts, and the like may be erected or located without the prior approval of the Homeowner's Association or a committee designated thereby. It should be noted that the conditions, to home-building contain additional restrictions regarding clearing, construction, and other improvements on common area and private property.

RECEIVED
NOV 1990
PLANNING DEPARTMENT

COMMONWEALTH OF VIRGINIA
STEPHEN A. ROMEO
No. 1448-B
LAND SURVEYOR

REVISED : 9/14/90
REVISED : 11/28/90

MC010

S-56-90

SHEET 1 OF 4
3726W

MC010

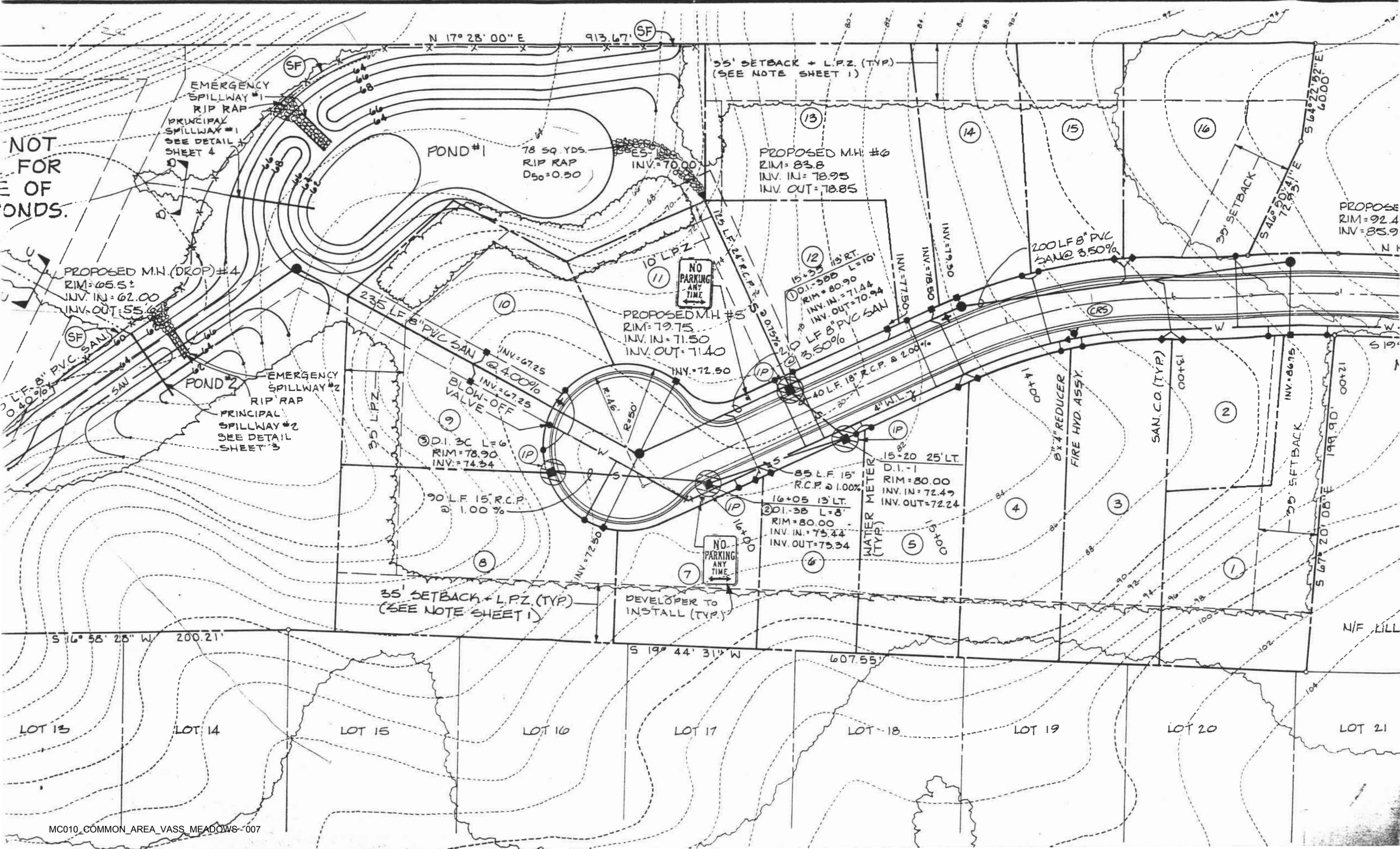
N 17° 28' 00" E
913.67'
SF
35' SETBACK + L.P.Z. (TYP.)
(SEE NOTE SHEET 1)
EMERGENCY SPILLWAY #1
RIP RAP
PRINCIPAL SPILLWAY #1
SEE DETAIL SHEET 4
NOT FOR
E OF
ONDS.
POND #1
78 SQ. YDS.
RIP RAP
D50=0.50
ES-1
INV.=70.00
PROPOSED M.H. #6
RIM=83.8
INV. IN=78.95
INV. OUT=78.85
13
14
15
16
S 46° 22' 52" E
60.00'
39' SETBACK
S 46° 60' 41" E
72.93'
PROPOSE
RIM=92.4
INV=85.9
PROPOSED M.H. (DROP) #4
RIM=65.5±
INV. IN=62.00
INV. OUT=55.6
10 L.P.Z.
NO PARKING ANY TIME
125 L.F. 24" R.C.P. @ 0.75%
12
15+35 11' RT.
D.I.-3BB L=10'
RIM=80.90
INV. IN.=71.44
INV. OUT=70.94
INV.=77.50
INV.=78.50
INV.=79.50
200 LF 8" PVC SAN @ 3.50%
11
10
235 LF 8" PVC SAN @ 4.00%
INV.=67.25
INV.=67.25
BLOW-OFF VALVE
PROPOSED M.H. #5
RIM=79.75
INV. IN=71.50
INV. OUT=71.40
INV.=72.50
210 LF 8" PVC SAN @ 3.50%
40 L.F. 18" R.C.P. @ 2.00%
4" W.L.
CRS
W
S 19°
0.40%
SAN.
POND #2
EMERGENCY SPILLWAY #2
RIP RAP
PRINCIPAL SPILLWAY #2
SEE DETAIL SHEET 3
35' L.P.Z.
9
③D.I. 3C L=6'
RIM=78.90
INV.=74.34
R=46'
R=50'
1P
90 L.F. 15" R.C.P. @ 1.00%
85 L.F. 15" R.C.P. @ 1.00%
16+05 13' LT.
②D.I.-3B L=8'
RIM=80.00
INV. IN.=73.44
INV. OUT=73.34
15+20 25' LT.
D.I.-1
RIM=80.00
INV. IN=72.49
INV. OUT=72.24
WATER METER (TYP.)
8" x 4" REDUCER
FIRE HYD. ASSY.
SAN. C.O. (TYP.)
INV.=86.75
39' SETBACK
199.90'
S 67° 20' 08" E
N/F LILL
8
7
6
5
4
3
2
1
INV.=72.50
16+00
15+00
14+00
13+00
12+00
NO PARKING ANY TIME
DEVELOPER TO INSTALL (TYP.)
35' SETBACK + L.P.Z. (TYP.)
(SEE NOTE SHEET 1)
S 16° 58' 28" W
200.21'
S 19° 44' 31" W
607.55'
LOT 13
LOT 14
LOT 15
LOT 16
LOT 17
LOT 18
LOT 19
LOT 20
LOT 21

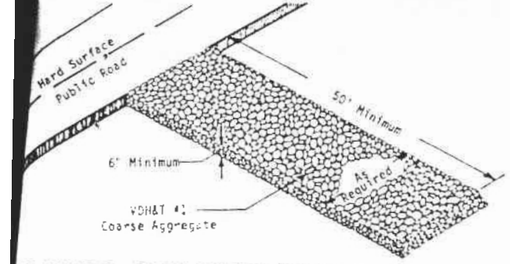

GRAVEL CONSTRUCTION ENTRANCE

N.T.S.

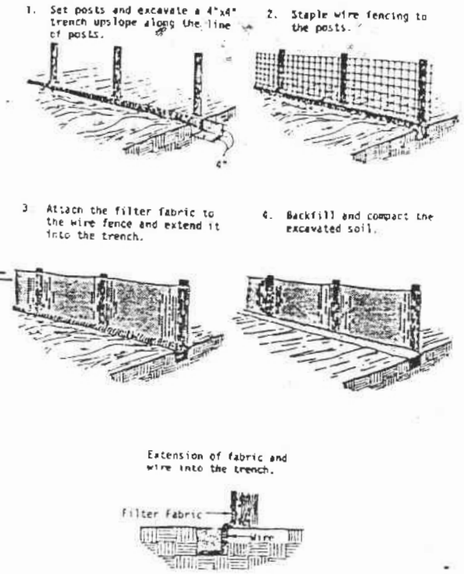

CONSTRUCTION OF A SILT FENCE

N.T.S.

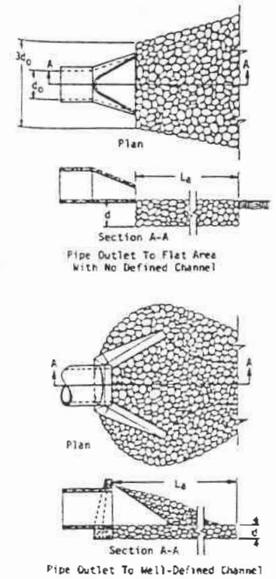

Notes

1. Apron lining may be riprap, grouted riprap, or concrete.
2. L_a is the length of the riprap apron as calculated using Plates 1.36c and 1.36e.
3. d = 1.5 times the maximum stone diameter but not less than 6 inches.

PIPE OUTLET CONDITIONS

N.T.S.

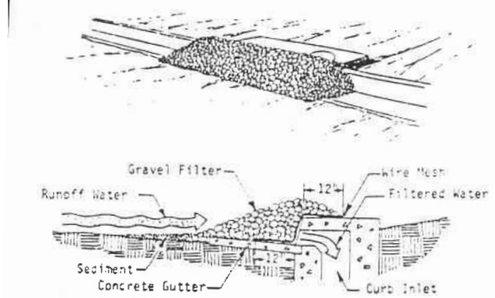

Specific Application

This method of inlet protection is applicable at curb inlets where ponding in front of the structure is not likely to cause inconvenience or damage to adjacent structures and unprotected areas.

GRAVEL CURB INLET SEDIMENT FILTER

N.T.S.

MC010

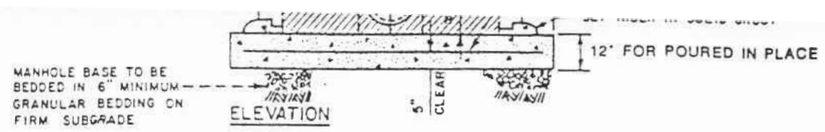

STRADDLE MANHOLE

N.T.S.

"WEDG LOK" TYPE RUBBER COATED STEEL STEPS OR APPROVED EQUAL CAST IN PLACE.

ALL JOINTS, LIFT HOLES, INLETS, OUTLETS TO BE SEALED & GROUTED INSIDE & OUT.

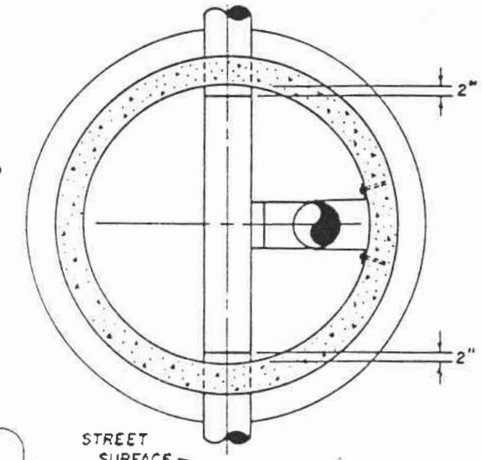

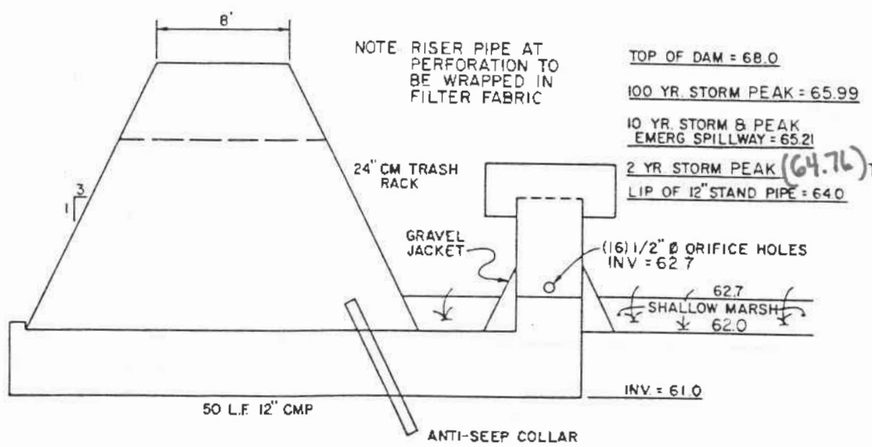

DETAIL FOR PRINCIPAL SPILLWAY #1

N.T.S.

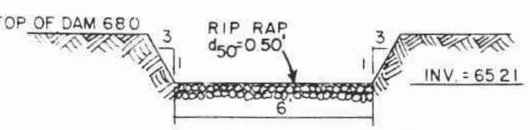

DETAIL FOR EMERGENCY SPILLWAY #1

N.T.S.

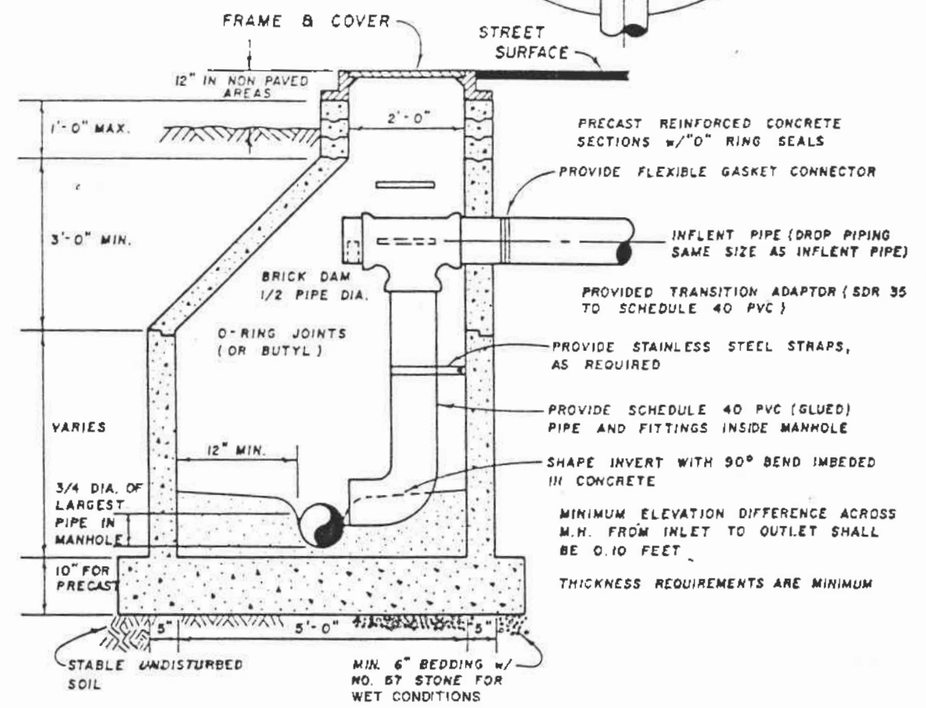

TYPICAL MANHOLE WITH INSIDE DROP CONNECTION, 60" DIA.

N.T.S.

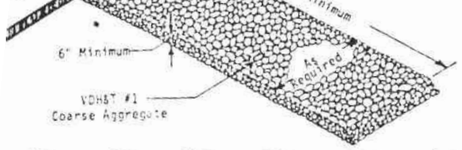

AVEL CONSTRUCTION ENTRANCE

N.T.S.

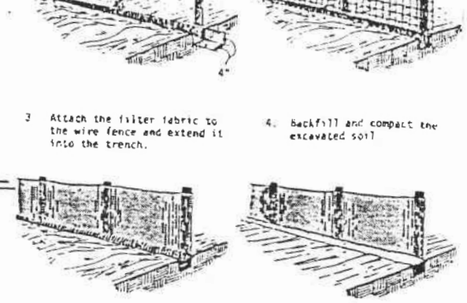

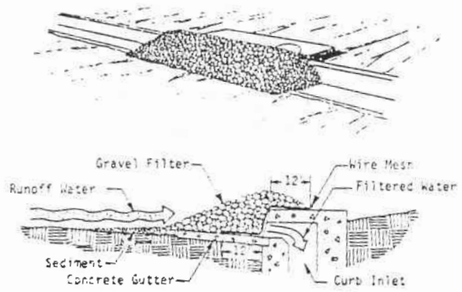

Specific Application

This method of inlet protection is applicable at curb inlets where ponding in front of the structure is not likely to cause inconvenience or damage to adjacent structures and unprotected areas.

GRAVEL CURB INLET SEDIMENT FILTER

N.T.S.

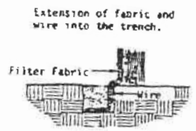

CONSTRUCTION OF A SILT FENCE

N.T.S.

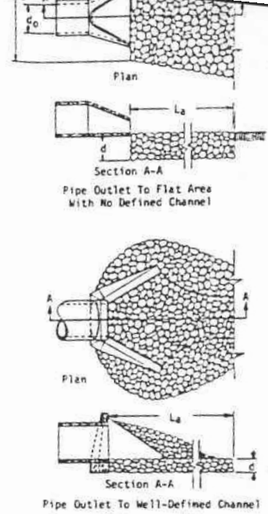

Notes

1. Apron lining may be riprap, grouted riprap, or concrete.
2. L_a is the length of the riprap apron as calculated using flates 1.36d and 1.36e.
3. d = 1.5 times the maximum stone diameter but not less than 6 inches.

PIPE OUTLET CONDITIONS

N.T.S.

N.T.S.

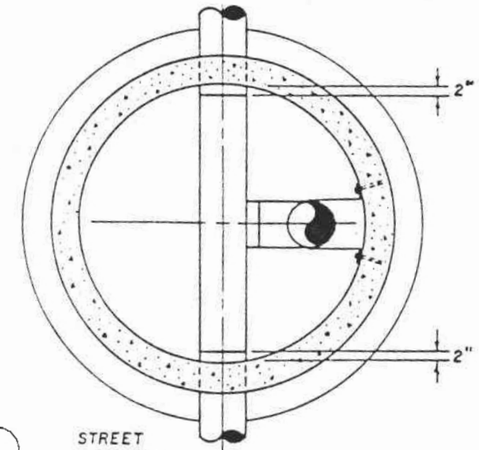

"WEDG LOK" TYPE RUBBER COATED STEEL STEPS OR APPROVED EQUAL CAST IN PLACE.

ALL JOINTS, LIFT HOLES, INLETS, OUTLETS TO BE SEALED & GROUTED INSIDE & OUT.

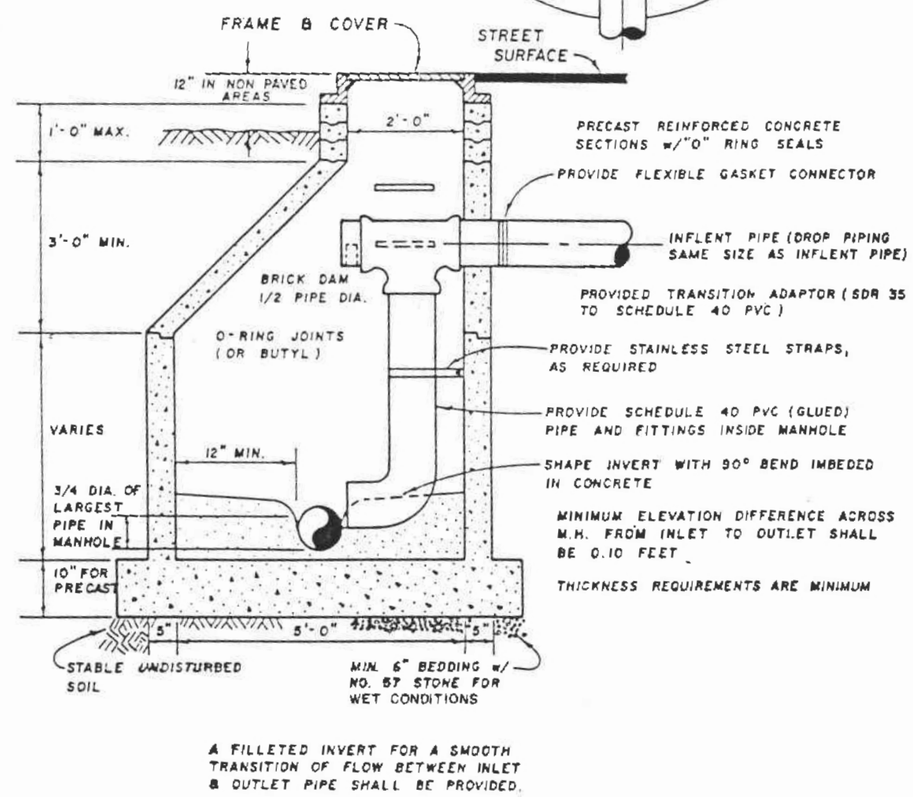

TYPICAL MANHOLE WITH INSIDE DROP CONNECTION, 60"

N.T.S.

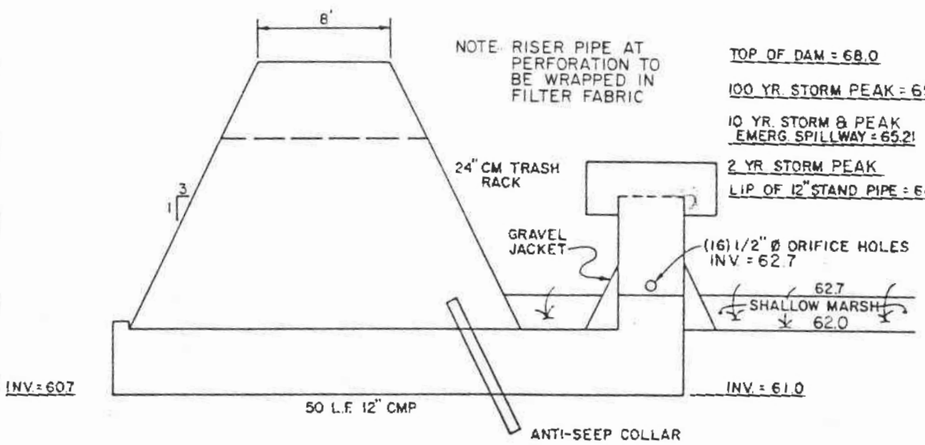

DETAIL FOR PRINCIPAL SPILLWAY #1

N.T.S.

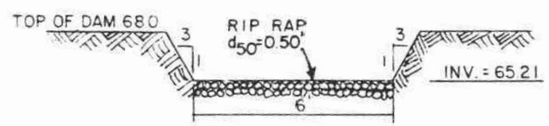

DETAIL FOR EMERGENCY SPILLWAY #1

N.T.S.

DESIGN USING 24R STORM

```
==========================================================================
INLET NUMBER 1                LENGTH  10.0        STATION  ~~13~~+35
                                                           15+35
DRAINAGE AREA =  0.900 ACRES        C VALUE = .550        CA =  0.495
SUM CA=   0.495 INT=  4.60  CFS=   2.277  CO=  0.000 GUTTER FLOW=   2.277

GUTTER SLOPE = 0.0184 FT/FT        PAVEMENT CROSS SLOPE =  0.0208 FT/FT

SPREAD      W      W/T     SW        SW/SX      Eo      a      S'W     SE
 6.44      2.0    0.31   0.0833     4.0       0.78    3.5    0.146  0.135

      XXXXXXXXXX CURB INLET ON A CONTINUOUS GRADE XXXXXXXXXX
   REQUIRED LENGTH (ft) = 11.5                EFFICIENCY= 0.97
   CFS INTERCEPTED=  2.22                 CFS CARRYOVER=  0.06


==========================================================================
INLET NUMBER 2                LENGTH   8.0        STATION  16+05

DRAINAGE AREA =  0.400 ACRES        C VALUE = .850        CA =  0.340
SUM CA=   0.340 INT=  5.70  CFS=   1.938  CO=  0.000 GUTTER FLOW=   1.938

GUTTER SLOPE = 0.0100 FT/FT        PAVEMENT CROSS SLOPE =  0.0208 FT/FT

SPREAD      W      W/T     SW        SW/SX      Eo      a      S'W     SE
 6.97      2.0    0.29   0.0833     4.0       0.75    3.5    0.146  0.130

      XXXXXXXXXX CURB INLET ON A CONTINUOUS GRADE XXXXXXXXXX
   REQUIRED LENGTH (ft) =  9.2                EFFICIENCY= 0.98
   CFS INTERCEPTED=  1.89                 CFS CARRYOVER=  0.05
```

WATER WOULD HAVE TO SPREAD TO ℄
TO OVERTOP CURB (DEPTH 4")

```
==============================================================================
INLET NUMBER 3                LENGTH   6.0        STATION  END OF CIRCLE

DRAINAGE AREA =  0.200 ACRES        C VALUE = .850        CA =  0.170
DRAINAGE AREA =  0.200 ACRES        C VALUE = .850        CA =  0.170

FOR THE FIRST SIDE
SUM CA=   0.170 INT=  5.70  CFS=   0.969  CO=  0.060 GUTTER FLOW=   1.029
FOR THE OTHER SIDE
SUM CA=   0.170 INT=  5.70  CFS=   0.969  CO=  0.050 GUTTER FLOW=   1.019
AT THE INLET

SUM CA=   0.340 INT=  5.70  CFS=   1.938  CO=  0.110 GUTTER FLOW=   2.048

GUTTER SLOPE = 0.0100 FT/FT        PAVEMENT CROSS SLOPE =  0.0208 FT/FT


SPREAD AT A SLOPE OF .010 (ft./ft.) AND   1.03 (cfs) IS  4.75 (ft.)

      XXXXXXXXXX CURB INLET IN A SUMP XXXXXXXXXX
   P EFFEC. LENGTH (ft) =  9.60                  H (ft) = 0.292
   DEPTH OF WATER (ft) =   0.20          SPREAD (ft)  =  9.84
```

CHECK USING 10 YR STORM

```
==========================================================================
NLET NUMBER 1                LENGTH  10.0        STATION  13+35

RAINAGE AREA =  0.900 ACRES        C VALUE = .550        CA =  0.495
UM CA=   0.495 INT=  6.00  CFS=   2.970  CO=  0.000 GUTTER FLOW=   2.970

UTTER SLOPE = 0.0184 FT/FT        PAVEMENT CROSS SLOPE =  0.0208 FT/FT

PREAD      W      W/T      SW        SW/SX      Eo      a      S'W     SE
7.43      2.0    0.27   0.0833      4.0       0.72    3.5    0.146  0.126

     XXXXXXXXXX CURB INLET ON A CONTINUOUS GRADE XXXXXXXXXX
  REQUIRED LENGTH (ft) = 13.4                EFFICIENCY= 0.91
  CFS INTERCEPTED=  2.71                 CFS CARRYOVER=  0.26


==========================================================================
LET NUMBER 2                 LENGTH   8.0        STATION  16+05

AINAGE AREA =  0.400 ACRES        C VALUE = .850        CA =  0.340
M CA=   0.340 INT=  7.10  CFS=   2.414  CO=  0.000 GUTTER FLOW=   2.414

TTER SLOPE = 0.0100 FT/FT        PAVEMENT CROSS SLOPE =  0.0208 FT/FT

READ       W      W/T      SW        SW/SX      Eo      a      S'W     SE
.81       2.0    0.26   0.0833      4.0       0.69    3.5    0.146  0.122

     XXXXXXXXXX CURB INLET ON A CONTINUOUS GRADE XXXXXXXXXX
  REQUIRED LENGTH (ft) = 10.4                EFFICIENCY= 0.93
  CFS INTERCEPTED=  2.24                 CFS CARRYOVER=  0.18
```

```
==============================================================================
INLET NUMBER 3                LENGTH   6.0        STATION  END OF CIRCLE

DRAINAGE AREA =  0.200 ACRES        C VALUE = .850        CA =  0.170
DRAINAGE AREA =  0.200 ACRES        C VALUE = .850        CA =  0.170

FOR THE FIRST SIDE
SUM CA=   0.170 INT=  7.10  CFS=   1.207  CO=  0.260 GUTTER FLOW=   1.467
FOR THE OTHER SIDE
SUM CA=   0.170 INT=  7.10  CFS=   1.207  CO=  0.180 GUTTER FLOW=   1.387
AT THE INLET

SUM CA=   0.340 INT=  7.10  CFS=   2.414  CO=  0.440 GUTTER FLOW=   2.854

GUTTER SLOPE = 0.0100 FT/FT        PAVEMENT CROSS SLOPE =  0.0208 FT/FT


SPREAD AT A SLOPE OF .010 (ft./ft.) AND   1.47 (cfs) IS  5.96 (ft.)

      XXXXXXXXXX CURB INLET IN A SUMP XXXXXXXXXX
   P EFFEC. LENGTH (ft) =  9.60                  H (ft) = 0.292
   DEPTH OF WATER (ft) =   0.26          SPREAD (ft)  = 12.28
```

HYDRALUIC GRADE LINE

PROJECT: ROSALIE ESTATES
JOB NO.: 90C51
DATE: SEPTEMBER 20, 1990

PREPARED BY: LANGLLEY and McDONALD, P.C.
COMPUTED BY: S.A.R.
SHEET 1 OF 1

CONCRETE PIPE n= 0.013

INLET STATION	OUTLET SURFACE ELEV	D(O)	Q(O)	L(O)	SF(O)	H(F)	JUNCTION LOSS V(O)	H(O)	Q(I)	D(I)	V(I)	Q*V	V^2/2G	H(I)	ANGLE	K	H(>)	H(T)	1.3* H(T)	0.5* H(T)	FINAL H	INLET SURFACE ELEV	RIM ELEV
ES-1	71.61	24	17.6	125	0.0075	0.94	5.60	0.12	14.6	18	8.26	121	1.06	0.37	30	0.28	0.30	0.79	1.03	0.51	1.45	73.06	80.90
DI-3BB	73.06	18	14.6	40	0.0200	0.80	8.26	0.26	4.8	15	3.91	19	0.24	0.08	75	0.64	0.15	0.50	0.65	0.33	1.13	74.19	80.00
DI-3B	74.19	15	4.8	85	0.0100	0.85	3.91	0.06	2.4	15	1.96	5	0.06	0.02	30	0.28	0.02	0.10	0.13	0.06	0.91	75.10	80.00
DI-3C	75.10	15	2.4	90	0.0100	0.90	1.96	0.01	0.0	0	0.00	0	0.00	0.00	0	0.00	0.00	0.01	0.02	0.01	0.91	76.01	79.90

STORM DRAINAGE CALCULATIONS
DESIGN FORMULA: Q=ACI
FREQUENCY: 10 YEAR
CONCREPIPE 0.013

PROJECT: ROSALIE ESTATES
JOB NO: 90051.00
DATE: SEPTEMBER 20, 1990

PREPARED BY LANGLEY & McDONALD P.C.
COMPUTED BY : S.A.R.
SHEET 1 OF 1

FROM PT	TO PT	AREA ACRE A"	RUNOFF COEF "C"	INCR A X C	BASIN TIME MIN.	BASIN INTEN IN	BASIN "Q" CFS	ACCUM A X C	SYSTEM TIME MIN.	SYSTEM INTEN IN.	SYSTEM "Q" CFS	PIPE SIZE IN.	CAPA-CITY CFS	VELOC FT/ SEC	LENGTH FEET	SLOPE FT/FT	FALL FT	INVERT ELEV UP	INVERT ELEV DOWN	PIPE TIME MIN.
DI-3C	DI-3B	0.40	0.85	0.34	5.00	7.10	2.4	0.34	5.00	7.10	2.4	15	6.5	5.26	90	0.0100	0.90	74.34	73.44	0.28
DI-3B	DI-1	0.40	0.85	0.34	5.00	7.10	2.4	0.68	5.28	7.06	4.8	15	6.5	5.26	85	0.0100	0.85	73.34	72.49	0.27
DI-1	DI-3BB	4.40	0.40	1.76	10.00	6.00	10.6	2.44	10.00	6.00	14.6	18	14.9	8.41	40	0.0200	0.80	72.24	71.44	0.08
DI-3BB	ES-1	0.90	0.55	0.50	10.00	6.00	3.0	2.94	10.08	6.00	17.6	24	19.6	6.24	125	0.0075	0.94	70.94	70.00	0.33

Langley and McDonald
A PROFESSIONAL CORPORATION
ENGINEERS • PLANNERS • SURVEYORS
VIRGINIA BEACH - WILLIAMSBURG, VIRGINIA

Subject: STORM WATER RUNOFF
Computed By: SAR Checked By:

Project No. 90051
Client:
Date: Sheet No.:

BASIN TO POND #1

PREDEVELOPMENT CONDITION

A = 8.0 AC ⇒ 4.3 AC ONSITE (WOODED) + 3.7 AC OFFSITE (MED. DENSITY SF RES)

C = (4.3 x 0.3) + (3.7 x 0.48) ÷ 8 = 0.38

T_c = 15 MIN

I_2 = 3.9"/HR

Q_2 = 11.9 CFS

Pre → (1) 11.9
(2) 3.5
15.4 cfs

POST DEVELOPMENT CONDITION

A = 8.0 AC (MEDIUM DENSITY SINGLE FAMILY RESIDENTIAL)

C = 0.48

T_c = 10 MIN

Post → (1) 2.3
(2) 5.1
7.4 cfs

SEE ROUTING COMPUTATIONS FOR POND #1

BASIN TO POND #2

PREDEVELOPMENT CONDITION

A = 2.3 AC ⇒ 1.2 AC ONSITE (WOODED) + 1.1 AC OFFSITE (MED. DENSITY SF RES)

C = (1.2 x 0.3) + (1.1 x 0.48) ÷ 2.3 = 0.39

T_c = 15 MIN

I_2 = 3.9"/HR

Q_2 = 3.5 CFS

POST DEVELOPMENT CONDITION

A = 2.3 AC (MEDIUM DENSITY SINGLE FAMILY RESIDENTIAL)

C = 0.48

T_c = 10 MIN

SEE ROUTING COMPUTATIONS FOR POND #2

MAN-MADE CHANNELS
SECTION B-B ON PLANS

VARIABLES LIST:

Y - FLOW DEPTH	B - CHANNEL BOTTOM WIDTH	S - CHANNEL SLOPE
Q - FLOWRATE	M - CHANNEL SIDE SLOPE	N - CHANNEL ROUGHNESS

VARIABLE TO BE SOLVED (Y,Q,B,M,S OR N) ? Y

Q (CFS) ? 3.9
B (FT) ? 4
M (FT/FT) ? 2
S (FT/FT) ? .01
N (FT^1/6) ? .07

RESULTS
==========
Y= 0.59 FT
A= 3.07 SF
P= 6.65 FT
V= 1.27 FPS
F= 0.32 SUB-CRITICAL FLOW

<Shift> <Prt Sc> print <Return> repeat <Space Bar> back to menu

---

MAN-MADE CHANNELS
SECTION C-C ON PLANS

VARIABLES LIST:

Y - FLOW DEPTH	B - CHANNEL BOTTOM WIDTH	S - CHANNEL SLOPE
Q - FLOWRATE	M - CHANNEL SIDE SLOPE	N - CHANNEL ROUGHNESS

VARIABLE TO BE SOLVED (Y,Q,B,M,S OR N) ? Y

Q (CFS) ? 1.9
B (FT) ? 2
M (FT/FT) ? 2
S (FT/FT) ? .017
N (FT^1/6) ? .07

RESULTS
==========
Y= 0.48 FT
A= 1.41 SF
P= 4.13 FT
V= 1.35 FPS
F= 0.40 SUB-CRITICAL FLOW

<Shift> <Prt Sc> print <Return> repeat <Space Bar> back to menu

---

MAN-MADE CHANNELS

EMERGENCY SPILLWAY - POND #1

VARIABLES LIST:

Y - FLOW DEPTH	B - CHANNEL BOTTOM WIDTH	S - CHANNEL SLOPE
Q - FLOWRATE	M - CHANNEL SIDE SLOPE	N - CHANNEL ROUGHNESS

VARIABLE TO BE SOLVED (Y,Q,B,M,S OR N) ? Y

Q (CFS) ? 1.6
B (FT) ? 6
M (FT/FT) ? 3
S (FT/FT) ? .01
N (FT^1/6) ? .07

RESULTS
==========
Y= 0.28 FT
A= 1.92 SF
P= 7.77 FT
V= 0.83 FPS
F= 0.29 SUB-CRITICAL FLOW

<Shift> <Prt Sc> print <Return> repeat <Space Bar> back to menu

---

MAN-MADE CHANNELS

EMERGENCY SPILLWAY - POND #2

VARIABLES LIST:

Y - FLOW DEPTH	B - CHANNEL BOTTOM WIDTH	S - CHANNEL SLOPE
Q - FLOWRATE	M - CHANNEL SIDE SLOPE	N - CHANNEL ROUGHNESS

VARIABLE TO BE SOLVED (Y,Q,B,M,S OR N) ? Y

Q (CFS) ? 1.3
B (FT) ? 4
M (FT/FT) ? 3
S (FT/FT) ? .01
N (FT^1/6) ? .07

RESULTS
==========
Y= 0.31 FT
A= 1.52 SF
P= 5.95 FT
V= 0.85 FPS
F= 0.30 SUB-CRITICAL FLOW

<Shift> <Prt Sc> print <Return> repeat <Space Bar> back to menu

---

Langley and McDonald
A PROFESSIONAL CORPORATION
ENGINEERS • PLANNERS • SURVEYORS
VIRGINIA BEACH - WILLIAMSBURG, VIRGINIA

Subject: POND #1

Computed By: SAR Checked By:

Project No. 90051
Client:
Date: Sheet No.:

ELEV.	AREA	INCREMENTAL VOLUME	CUMULATIVE VOLUME
68	19410 SF		73770 CF
		34580 CF	
66	15170 SF		39190 CF
		25680 CF	
64	10510 SF		13510 CF
62.5	14,000 SF	13510 CF	
62	3000 SF		0

DRAINAGE AREA = 8.0 AC
C = 0.48
T_c = 10 MIN.

ON SITE = 4.3 AC
OFF SITE = 3.7 AC (EXISTING MEDIUM DENSITY SINGLE FAMILY)

30%(10.04) = 3.02 AC.

R_v = 0.05 + 0.009 (30)
= 0.32

RUNOFF FROM 1" STORM = 0.0833' x 348,480 # x 0.32 = 9,290 CF
9290 CF RELEASED OVER 24 HRS = 0.1 CFS - .11 cfs

STORAGE VOLUME AT 62.7 = 0 CF
STORAGE VOLUME AT 64.0 = 13510 CF
STORAGE VOLUME AT X = 9,290 CF
X = 63.6

MARSH STORAGE
$VOLB = [(R_m)(R_v)/12](A)$ = 4650 CF REQ'D

$\frac{13510}{2} = \frac{4650}{X}$ X = 0.7

POND-2 Version: 4.10
S/N: 89020366

Rosalie Estates
Detention Pond

CALCULATED 09-18-1990 15:44:36
DISK FILE : A:ROSALIE1.VOL

Planimeter scale: 1 inch = 50 ft.

Elevation (ft)	Planimeter (sq.in.)	Area (acres)	A1+A2+sqr(A1*A2) (acres)	* Volume (acre-ft)	Volume Sum (acre-ft)
62.00	1.20	0.07	0.00	0.00	0.00
63.00	*I*	0.14	0.31	0.10	0.10
64.00	4.20	0.24	0.44	0.29	0.29
65.00	*I*	0.29	0.80	0.27	0.56
66.00	6.10	0.35	0.88	0.59	0.88
67.00	*I*	0.40	1.12	0.37	1.25
68.00	7.80	0.45	1.19	0.80	1.68

I ---> Interpolated area from closest two planimeter readings.

$$IA = (sq.rt(Area1) + ((Ei-E1)/(E2-E1))*(sq.rt(Area2)-sq.rt(Area1)))^2$$

where: E1, E2 = Closest two elevations with planimeter data
Ei = Elevation at which to interpolate area
Area1,Area2 = Areas computed for E1, E2, respectively
IA = Interpolated area for Ei

* Incremental volume computed by the Conic Method for Reservoir Volumes.

Volume = (1/3) * (EL2-EL1) * (Area1 + Area2 + sq.rt.(Area1*Area2))

where: EL1, EL2 = Lower and upper elevations of the increment
Area1,Area2 = Areas computed for EL1, EL2, respectively
Volume = Incremental volume between EL1 and EL2

Outlet Structure File: ROSALIE4.STR

POND-2 Version: 4.10 S/N: 89020366
Date Executed: 09-18-1990 Time Executed: 14:42:32

***** COMPOSITE OUTFLOW SUMMARY ****

Elevation (ft)	Q (cfs)	Contributing Structures
62.00	0.0	
62.50	0.0	
63.00	0.1	1
63.50	0.1	1
64.00	0.1	1 +2
64.50	1.3	1 +2
65.00	3.2	1 +2
65.50	4.8	1 +2
66.00	5.5	1 +2
66.50	6.2	1 +2
67.00	6.8	1 +2
67.50	7.3	1 +2
68.00	7.8	1 +2

Outlet Structure File: ROSALIE4.STR

POND-2 Version: 4.10 S/N: 89020366
Date Executed: 09-18-1990 Time Executed: 14:42:32

Outlet Structure File: A:ROSALIE4.STR
Planimeter Input File: A:ROSALIE1.VOL
Rating Table Output File: A:ROSALIE4.PND

Min. Elev.(ft) = 62 Max. Elev.(ft) = 68 Incr.(ft) = .5

Additional elevations (ft) to be included in table:
* *

****
SYSTEM CONNECTIVITY
****

Structure	No.	Q Table		Q Table
ORIFICE	1		->	1
STAND PIPE	2		->	2

Outflow rating table summary was stored in file A:ROSALIE4.PND

Outlet Structure File: ROSALIE4.STR

POND-2 Version: 4.10 S/N: 89020366
Date Executed: 09-18-1990 Time Executed: 14:42:32

>>>>>> Structure No. 1 <<<<<<
(Input Data)

ORIFICE
Orifice - Based on Area and Datum Elevation

E1 elev.(ft)?	62.7
E2 elev.(ft)?	68.001
Orifice coeff.?	.6
Invert elev.(ft)?	62.7
Datum elev.(ft) ?	62.7
Orifice area (sq ft)?	.0218

16-1/2" HOLES
BMP LOW FLOW
ORIF

Outlet Structure File: ROSALIE4.STR

POND-2 Version: 4.10 S/N: 89020366
Date Executed: 09-18-1990 Time Executed: 14:42:32

>>>>>> Structure No. 2 <<<<<<
(Input Data)

STAND PIPE
Stand Pipe with weir or orifice flow

E1 elev.(ft)? 64
E2 elev.(ft)? 68.001
Invert elev.(ft)? 64
Diameter (ft)? 1
Weir coefficient? 1.0
Orifice coefficient? .6
Start transition elev.(ft) @ ?
Transition height (ft)? .5

Riser

Outlet Structure File: ROSALIE4.STR

POND-2 Version: 4.10 S/N: 89020366
Date Executed: 09-18-1990 Time Executed: 14:42:32

Outflow Rating Table for Structure #1
ORIFICE Orifice - Based on Area and Datum Elevation

Elevation (ft)	Q (cfs)	Computation Messages
62.00	0.0	E < E1= 62.7
62.50	0.0	E < E1= 62.7
63.00	0.1	H = .3
63.50	0.1	H = .8
64.00	0.1	H = 1.3
64.50	0.1	H = 1.8
65.00	0.2	H = 2.3
65.50	0.2	H = 2.8
66.00	0.2	H = 3.3
66.50	0.2	H = 3.8
67.00	0.2	H = 4.3
67.50	0.2	H = 4.8
68.00	0.2	H = 5.3

C = .6 A = .0218 sq.ft.
H (ft) = Table elev. - Datum elev. (62.7 ft)
Q (cfs) = C * A * sqr(2g * H)

Outlet Structure File: ROSALIE4.STR

POND-2 Version: 4.10 S/N: 89020366
Date Executed: 09-18-1990 Time Executed: 14:42:32

Outflow Rating Table for Structure #2
STAND PIPE Stand Pipe with weir or orifice flow

***** INLET CONTROL ASSUMED *****

Elevation (ft)	Q (cfs)	Computation Messages
62.00	0.0	E < Inv.El.= 64
62.50	0.0	E < El= 64
63.00	0.0	E < El= 64
63.50	0.0	E < El= 64
64.00	0.0	Weir: H = 0.0
64.50	1.1	Weir: H = .5
65.00	3.1	Transition: H = 1.0
65.50	4.6	Orifice: H = 1.5
66.00	5.3	Orifice: H = 2.0
66.50	6.0	Orifice: H = 2.5
67.00	6.6	Orifice: H = 3.0
67.50	7.1	Orifice: H = 3.5
68.00	7.6	Orifice: H = 4.0

Weir Cw = 1 Weir length = 3.141593 ft
Orifice Co = .6 Orifice area = .7853982 sq.ft.
Q (cfs) = (Cw * L * H**1.5) or (Co * A * sqr(2*g*H))
Transition interpolated between elev. 64.95374 and 65.45374 ft
Weir equation = Orifice equation @ elev.= 65.20374 ft

```
*******
*     *
*     *
*     *
*     *
*     *
*     *
*******
```

EXECUTED 09-18-1990 14:44:05
Disk Files: A:ROSALIE4.PND ; A:ROSA2 .HYD

INITIAL CONDITIONS
Elevation = 62.00 ft
Outflow = 0.0 cfs

GIVEN POND DATA			COMPUTATIONS	
ELEVATION (ft)	OUTFLOW (cfs)	STORAGE (ac-ft)	2S/t (cfs)	2S/t + O (cfs)
62.00	0.0	0.00	0.0	0.0
62.50	0.0	0.04	12.1	12.1
63.00	0.1	0.10	30.3	30.4
63.50	0.1	0.19	57.5	57.6
64.00	0.1	0.29	87.7	87.8
64.50	1.3	0.42	127.1	128.4
65.00	3.2	0.56	169.4	172.6
65.50	4.8	0.71	214.8	219.6
66.00	5.5	0.88	266.2	271.7
66.50	6.2	1.06	320.7	326.9
67.00	6.8	1.25	378.1	384.9
67.50	7.3	1.46	441.7	449.0
68.00	7.8	1.68	508.2	516.0

Time increment (t) = 0.080 hrs.

2-YR WSEL ~~62.0~~ 64.76
OUT ~~0.0~~ 2.3

Pond File: A:ROSALIE4.PND EXECUTED: 09-18-1990
Inflow Hydrograph: A:ROSA2 .HYD 14:44:05
Outflow Hydrograph: A:NULL .HYD

INFLOW HYDROGRAPH

TIME (hrs)	INFLOW (cfs)
0.000	0.0
0.080	1.5
0.160	3.0
0.240	3.8
0.320	4.6
0.400	11.0
0.480	17.5
0.560	12.9
0.640	8.4
0.720	6.7
0.800	4.9
0.880	4.4
0.960	3.8
1.040	3.0
1.120	2.3
1.200	2.3
1.280	2.3
1.360	1.7
1.440	1.1
1.520	0.6
1.600	0.0

ROUTING COMPUTATIONS

I1+I2 (cfs)	2S/t - O (cfs)	2S/t + O (cfs)	OUTFLOW (cfs)	ELEVATION (ft)
-----	0.0	0.0	0.0	62.00
1.5	1.5	1.5	0.0	62.06
4.5	6.0	6.0	0.0	62.25
6.8	12.8	12.8	0.0	62.52
8.4	21.1	21.2	0.0	62.75
15.6	36.5	36.7	0.1	63.12
28.5	64.8	65.0	0.1	63.62
30.4	94.6	95.2	0.3	64.09
21.3	114.0	115.9	0.9	64.35
15.1	126.4	129.1	1.3	64.51
11.6	134.6	138.0	1.7	64.61
9.3	140.0	143.9	2.0	64.68
8.2	143.9	148.2	2.2	64.72
6.8	146.1	150.7	2.3	64.75
5.3	146.9	151.4	2.3	64.76
4.6	146.9	151.5	2.3	64.76
4.6	146.9	151.5	2.3	64.76
4.0	146.4	150.9	2.3	64.75
2.8	144.8	149.2	2.2	64.74
1.7	142.3	146.5	2.1	64.70
0.6	139.1	142.9	1.9	64.66

Peak Inflow = 17.5 cfs
Peak Outflow = 2.3 cfs
Peak Elevation = 64.76 ft

Pond File: A:ROSALIE4.PND
Inflow Hydrograph: A:ROSA2 .HYD
Outflow Hydrograph: A:NULL .HYD

EXECUTED: 09-18-1990
14:44:05

Peak Inflow = 17.5 cfs
Peak Outflow = 2.3 cfs
Peak Elevation = 64.76 ft

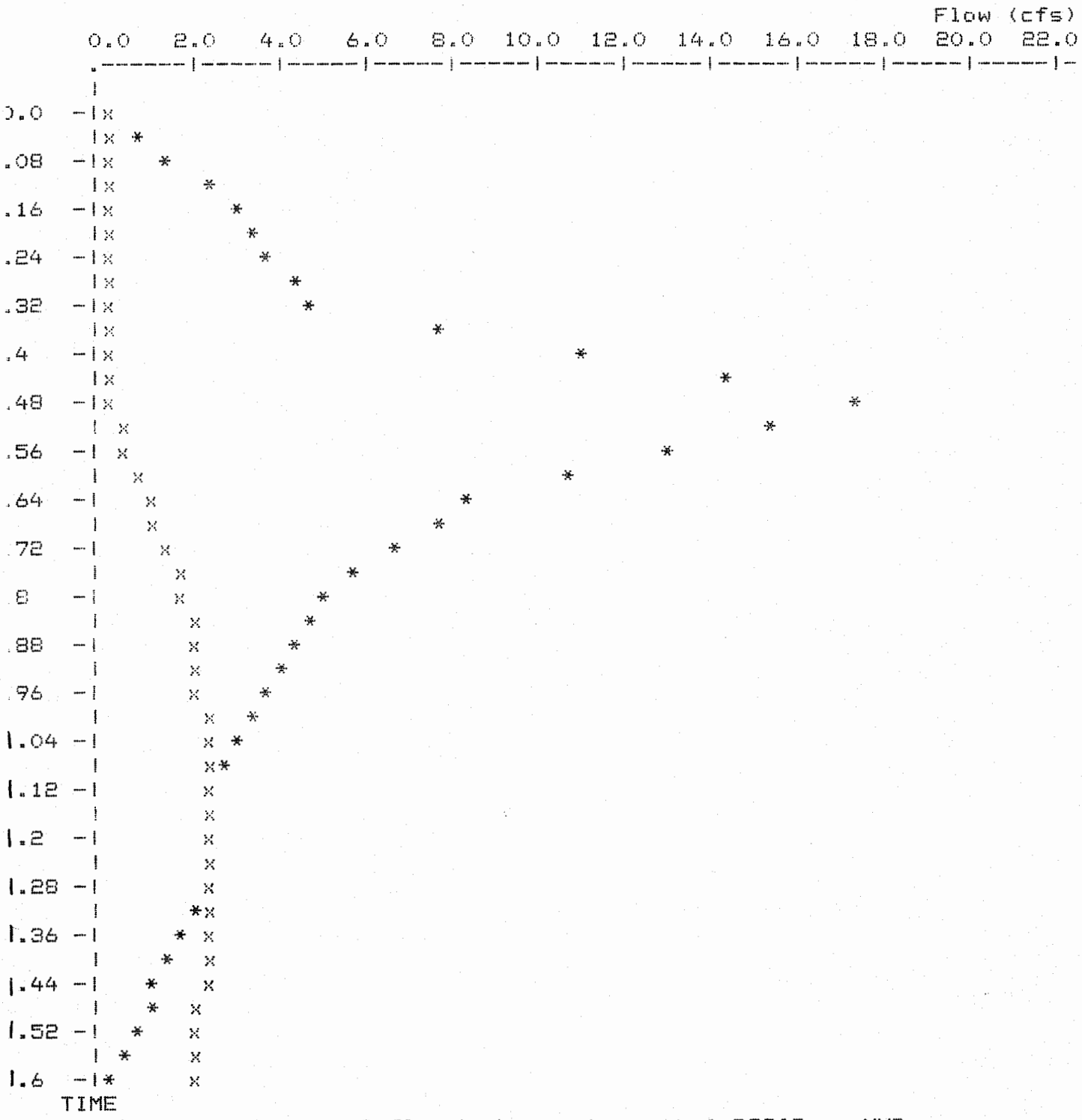

```
*******
*     *
*     *
*     *
*     *
*     *
*     *
*******
```

EXECUTED 09-18-1990 14:44:46
Disk Files: A:ROSALIE4.PND ; A:ROSA10 .HYD

INITIAL CONDITIONS
Elevation = 62.00 ft
Outflow = 0.0 cfs

GIVEN POND DATA			COMPUTATIONS	
ELEVATION (ft)	OUTFLOW (cfs)	STORAGE (ac-ft)	2S/t (cfs)	2S/t + O (cfs)
62.00	0.0	0.00	0.0	0.0
62.50	0.0	0.04	12.1	12.1
63.00	0.1	0.10	30.3	30.4
63.50	0.1	0.19	57.5	57.6
64.00	0.1	0.29	87.7	87.8
64.50	1.3	0.42	127.1	128.4
65.00	3.2	0.56	169.4	172.6
65.50	4.8	0.71	214.8	219.6
66.00	5.5	0.88	266.2	271.7
66.50	6.2	1.06	320.7	326.9
67.00	6.8	1.25	378.1	384.9
67.50	7.3	1.46	441.7	449.0
68.00	7.8	1.68	508.2	516.0

Time increment (t) = 0.080 hrs.

Pond File: A:ROSALIE4.PND EXECUTED: 09-18-1990
Inflow Hydrograph: A:ROSA10 .HYD 14:44:46
Outflow Hydrograph: A:NULL .HYD

INFLOW HYDROGRAPH

TIME (hrs)	INFLOW (cfs)
0.000	0.0
0.080	2.5
0.160	5.1
0.240	5.7
0.320	6.3
0.400	14.5
0.480	22.8
0.560	17.1
0.640	11.4
0.720	8.9
0.800	6.5
0.880	5.8
0.960	5.1
1.040	4.5
1.120	3.9
1.200	3.8
1.280	3.8
1.360	3.2
1.440	2.7
1.520	1.3
1.600	0.0

ROUTING COMPUTATIONS

I1+I2 (cfs)	2S/t - O (cfs)	2S/t + O (cfs)	OUTFLOW (cfs)	ELEVATION (ft)
-----	0.0	0.0	0.0	62.00
2.5	2.5	2.5	0.0	62.10
7.6	10.1	10.1	0.0	62.42
10.8	20.8	20.9	0.0	62.74
12.0	32.6	32.8	0.1	63.05
20.8	53.2	53.4	0.1	63.42
37.3	90.1	90.5	0.2	64.03
39.9	127.3	130.0	1.4	64.52
28.5	150.8	155.8	2.5	64.81
20.3	164.9	171.1	3.1	64.98
15.4	173.3	180.3	3.5	65.08
12.3	178.4	185.6	3.6	65.14
10.9	181.7	189.3	3.8	65.18
9.6	183.6	191.3	3.8	65.20
8.4	184.3	192.0	3.9	65.21
7.7	184.3	192.0	3.9	65.21
7.6	184.2	191.9	3.9	65.21
7.0	183.5	191.2	3.8	65.20
5.9	181.9	189.4	3.8	65.18
4.0	178.6	185.9	3.7	65.14
1.3	173.0	179.9	3.4	65.08

Peak Inflow = 22.8 cfs
Peak Outflow = 3.9 cfs
Peak Elevation = 65.21 ft

10-YEAR Routed

Pond File: A:ROSALIE4.PND
Inflow Hydrograph: A:ROSA10 .HYD
Outflow Hydrograph: A:NULL .HYD

EXECUTED: 09-18-1990
14:44:46

Peak Inflow = 22.8 cfs
Peak Outflow = 3.9 cfs
Peak Elevation = 65.21 ft

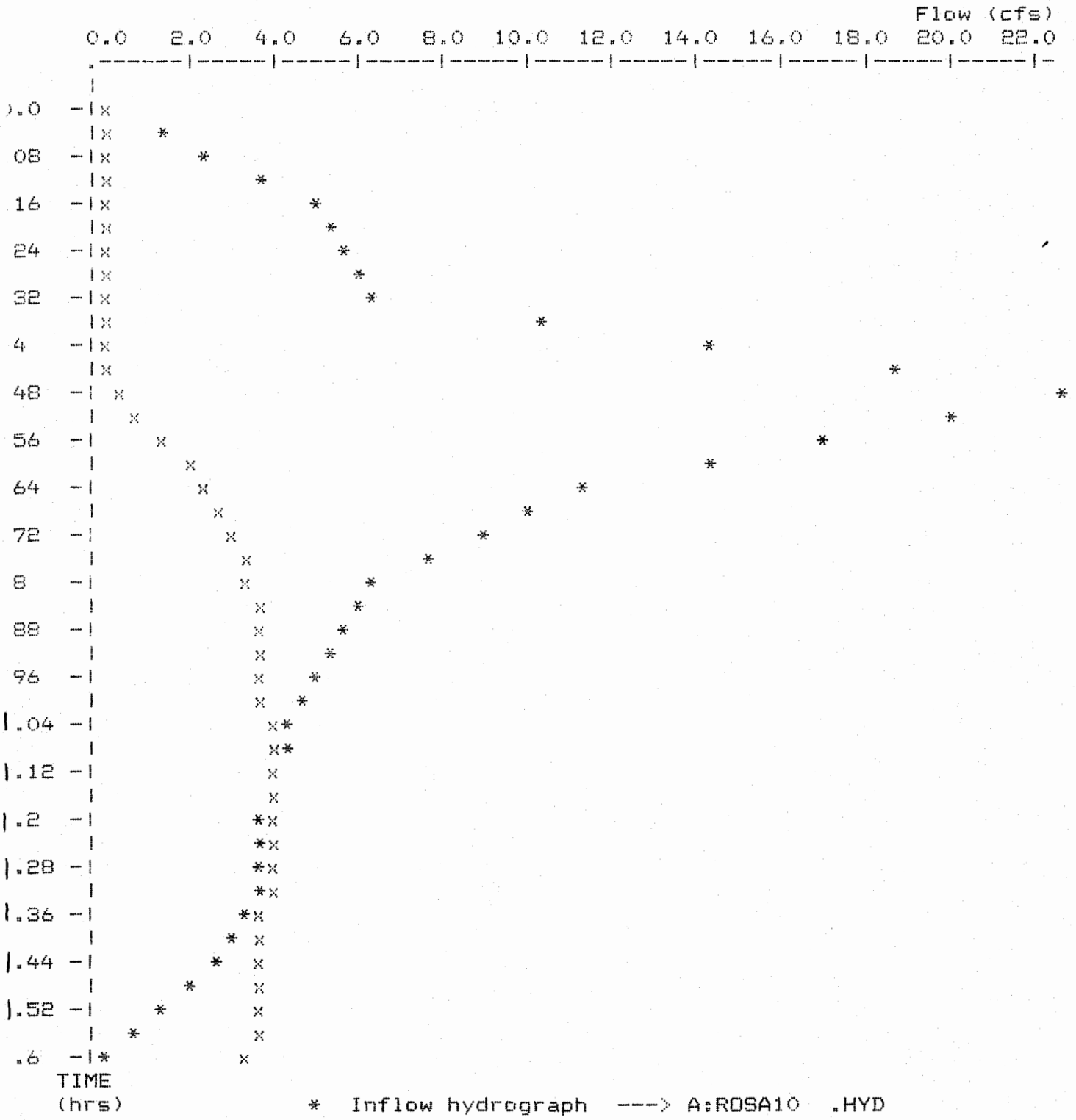

```
*******
*     *
*     *
*     *
*     *
*     *
*     *
*******
```

EXECUTED 09-18-1990 14:45:46
Disk Files: A:ROSALIE4.PND ; A:ROSA100 .HYD

INITIAL CONDITIONS
Elevation = 62.00 ft
Outflow = 0.0 cfs

GIVEN POND DATA			COMPUTATIONS	
ELEVATION (ft)	OUTFLOW (cfs)	STORAGE (ac-ft)	2S/t (cfs)	2S/t + O (cfs)
62.00	0.0	0.00	0.0	0.0
62.50	0.0	0.04	12.1	12.1
63.00	0.1	0.10	30.3	30.4
63.50	0.1	0.19	57.5	57.6
64.00	0.1	0.29	87.7	87.8
64.50	1.3	0.42	127.1	128.4
65.00	3.2	0.56	169.4	172.6
65.50	4.8	0.71	214.8	219.6
66.00	5.5	0.88	266.2	271.7
66.50	6.2	1.06	320.7	326.9
67.00	6.8	1.25	378.1	384.9
67.50	7.3	1.46	441.7	449.0
68.00	7.8	1.68	508.2	516.0

Time increment (t) = 0.080 hrs.

Pond File: A:ROSALIE4.PND EXECUTED: 09-18-1990
Inflow Hydrograph: A:ROSA100 .HYD 14:45:46
Outflow Hydrograph: A:NULL .HYD

INFLOW HYDROGRAPH

TIME (hrs)	INFLOW (cfs)
0.000	0.0
0.080	3.0
0.160	6.1
0.240	7.6
0.320	9.0
0.400	20.2
0.480	31.4
0.560	24.7
0.640	18.0
0.720	14.5
0.800	11.0
0.880	9.3
0.960	7.6
1.040	6.1
1.120	4.6
1.200	4.5
1.280	4.4
1.360	4.0
1.440	3.7
1.520	1.8
1.600	0.0

ROUTING COMPUTATIONS

I1+I2 (cfs)	2S/t - O (cfs)	2S/t + O (cfs)	OUTFLOW (cfs)	ELEVATION (ft)
-----	0.0	0.0	0.0	62.00
3.0	3.0	3.0	0.0	62.12
9.1	12.1	12.1	0.0	62.50
13.7	25.6	25.8	0.1	62.88
16.6	42.0	42.2	0.1	63.22
29.2	71.0	71.2	0.1	63.73
51.6	120.4	122.6	1.1	64.43
56.1	169.8	176.5	3.3	65.04
42.7	203.4	212.5	4.6	65.42
32.5	225.9	235.9	5.0	65.66
25.5	240.9	251.4	5.2	65.80
20.3	250.5	261.2	5.4	65.90
16.9	256.5	267.4	5.4	65.96
13.7	259.2	270.2	5.5	65.99
10.7	259.0	269.9	5.5	65.98
9.1	257.2	268.1	5.5	65.97
8.9	255.2	266.1	5.4	65.95
8.4	252.9	263.6	5.4	65.92
7.7	249.9	260.6	5.4	65.89
5.5	244.8	255.4	5.3	65.84
1.8	236.3	246.6	5.2	65.76

Peak Inflow = 31.4 cfs
Peak Outflow = 5.5 cfs
Peak Elevation = 65.99 ft

Pond File: A:ROSALIE4.PND
Inflow Hydrograph: A:ROSA100 .HYD
Outflow Hydrograph: A:NULL .HYD

EXECUTED: 09-18-1990
14:45:46

Peak Inflow = 31.4 cfs
Peak Outflow = 5.5 cfs
Peak Elevation = 65.99 ft

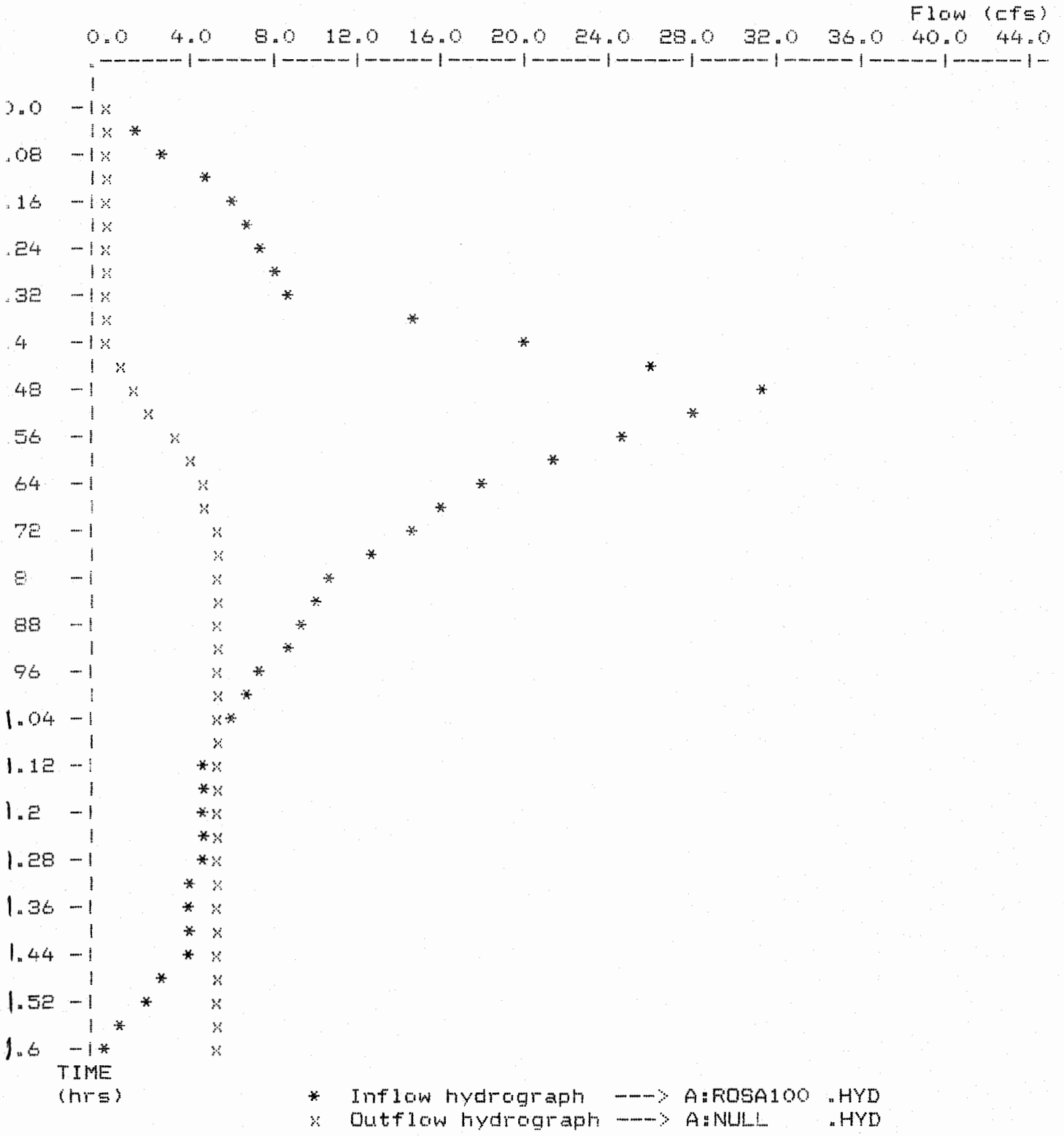

Langley and McDonald
A PROFESSIONAL CORPORATION
ENGINEERS • PLANNERS • SURVEYORS
VIRGINIA BEACH - WILLIAMSBURG, VIRGINIA

Subject POND #2 Deleted

Computed By SAR Checked By

Project No. 90051

Client

Date Sheet No.

ELEV.	AREA	INCREMENTAL VOLUME	CUMULATIVE VOLUME
66	9500 SF		16,750 CF
		14,000 CF	
64	4500 SF		5500 CF
		5500 CF	
62	1000 SF		0 CF

DRAINAGE AREA = 2.3 AC
C = 0.48
Tc = 10 MIN

ON SITE = 1.2 AC
OFF SITE = 1.1 AC. (EXISTING MEDIUM DENSITY SINGLE FAMILY)

Rv = 0.05 + 0.009 (30)
= 0.32

RUNOFF FROM 1" STORM = 0.0833' x 100,200 ft x 0.32 = 2670 CF
2670 CF RELEASED OVER 24 HRS. = 0.03 CFS

STORAGE VOLUME AT 62.0 = 0 CF
STORAGE VOLUME AT 64.0 = 5500 CF
STORAGE VOLUME AT X = 2670 CF
X = 63.97 SAY 64.0

MARSH STORAGE
VOLB = [(Rn)(Rv)/12] (A) = 1335 CF REQ'D

$\frac{5500}{2} = \frac{1335}{x}$ x = 0.5

POND-2 Version: 5.13
S/N: 1220515075

Rosalie Estates
Detention pond 2

CALCULATED 11-26-1990 09:10:53
DISK FILE: a:ROSALIE2.VOL

Planimeter scale: 1 inch = 50 ft.

Elevation (ft)	Planimeter (sq.in.)	Area (sq.ft)	A1+A2+sqr(A1*A2) (sq.ft)	* Volume (cubic-ft)		Volume Sum (cubic-ft)
62.00	0.40	1,000	0		0	0
63.00	*I*	2,436	4,996	1,665		1,665
64.00	1.80	4,500	7,621		5,081	5,081
65.00	*I*	6,769	16,788	5,596		10,677
66.00	3.80	9,500	20,538		13,692	18,773

I ---> Interpolated area from closest two planimeter readings.

$$IA = (sq.rt(Area1) + ((Ei-E1)/(E2-E1))*(sq.rt(Area2)-sq.rt(Area1)))^2$$

where: E1, E2 = Closest two elevations with planimeter data
Ei = Elevation at which to interpolate area
Area1,Area2 = Areas computed for E1, E2, respectively
IA = Interpolated area for Ei

* Incremental volume computed by the Conic Method for Reservoir Volumes.

Volume = (1/3) * (EL2-EL1) * (Area1 + Area2 + sq.rt.(Area1*Area2))

where: EL1, EL2 = Lower and upper elevations of the increment
Area1,Area2 = Areas computed for EL1, EL2, respectively
Volume = Incremental volume between EL1 and EL2

Outlet Structure File: ROSALIE6.STR

POND-2 Version: 5.13 S/N: 1220515075
Date Executed: Time Executed:

***** COMPOSITE OUTFLOW SUMMARY ****

Elevation (ft)	Q (cfs)	Contributing Structures
62.00	0.0	
62.50	0.0	1
63.00	0.0	1
63.50	0.0	1
64.00	0.0	1 +2
64.50	1.1	1 +2
65.00	3.1	1 +2
65.50	4.7	1 +2
66.00	5.4	1 +2

Outlet Structure File: ROSALIE6.STR

POND-2 Version: 5.13 S/N: 1220515075
Date Executed: Time Executed:

Outlet Structure File: a:ROSALIE6.STR
Planimeter Input File: a:ROSALIE2.VOL
Rating Table Output File: a:ROSALIE6.PND

Min. Elev.(ft) = 62 Max. Elev.(ft) = 66 Incr.(ft) = .5

Additional elevations (ft) to be included in table:
* *

****
SYSTEM CONNECTIVITY
****

Structure	No.	Q Table		Q Table
ORIFICE	1		->	1
STAND PIPE	2		->	2

Outflow rating table summary was stored in file:
a:ROSALIE6.PND

Outlet Structure File: ROSALIE6.STR

POND-2 Version: 5.13 S/N: 1220515075
Date Executed: Time Executed:

>>>>>> Structure No. 1 <<<<<<
(Input Data)

ORIFICE
Orifice - Based on Area and Datum Elevation

E1 elev.(ft)?	62.5
E2 elev.(ft)?	66.001
Orifice coeff.?	.6
Invert elev.(ft)?	62.5
Datum elev.(ft) ?	62.5
Orifice area (sq ft)?	.0055

Outlet Structure File: ROSALIE6.STR

POND-2 Version: 5.13 S/N: 1220515075
Date Executed: Time Executed:

>>>>>> Structure No. 2 <<<<<<
(Input Data)

STAND PIPE
Stand Pipe with weir or orifice flow

E1 elev.(ft)? 64
E2 elev.(ft)? 66.001
Crest elev.(ft)? 64.0
Diameter (ft)? 1
Weir coefficient? 1
Orifice coefficient? .6
Start transition elev.(ft) @ ?
Transition height (ft)? .5

Outlet Structure File: ROSALIE6.STR

POND-2 Version: 5.13 S/N: i220515075
Date Executed: Time Executed:

Outflow Rating Table for Structure #1
ORIFICE Orifice - Based on Area and Datum Elevation

Elevation (ft)	Q (cfs)	Computation Messages
62.00	0.0	E < E1= 62.5
62.50	0.0	H =0.0
63.00	0.0	H =.5
63.50	0.0	H =1.0
64.00	0.0	H =1.5
64.50	0.0	H =2.0
65.00	0.0	H =2.5
65.50	0.0	H =3.0
66.00	0.0	H =3.5

C = .6 A = .0055 sq.ft.
H (ft) = Table elev. - Datum elev. (62.5 ft)
Q (cfs) = C * A * sqr(2g * H)

Outlet Structure File: ROSALIE6.STR

POND-2 Version: 5.13 S/N: 1220515075
Date Executed: Time Executed:

Outflow Rating Table for Structure #2
STAND PIPE Stand Pipe with weir or orifice flow

***** INLET CONTROL ASSUMED *****

Elevation (ft)	Q (cfs)	Computation Messages
62.00	0.0	E < Inv.El.= 64
62.50	0.0	E < El= 64
63.00	0.0	E < El= 64
63.50	0.0	E < El= 64
64.00	0.0	Weir: H =0.0
64.50	1.1	Weir: H =.5
65.00	3.1	Transition: H =1.0
65.50	4.6	Orifice: H =1.5
66.00	5.3	Orifice: H =2.0

Weir Cw = 1 Weir length = 3.141593 ft
Orifice Co = .6 Orifice area = .7853982 sq.ft.
Q (cfs) = (Cw * L * H**1.5) or (Co * A * sqr(2*g*H))
Transition interpolated between elev. 64.95374 and 65.45374 ft
Weir equation = Orifice equation @ elev.= 65.20374 ft

Inflow Hydrograph: a:ROS2 .HYD
Rating Table file: a:ROSALIE6.PND

-----INITIAL CONDITIONS-----
Elevation = 62.00 ft
Outflow = 0.00 cfs
Storage = 0 cu-ft

GIVEN POND DATA			INTERMEDIATE ROUTING COMPUTATIONS	
ELEVATION (ft)	OUTFLOW (cfs)	STORAGE (cu-ft)	2S/t (cfs)	2S/t + O (cfs)
62.00	0.0	0	0.0	0.0
62.50	0.0	653	4.4	4.4
63.00	0.0	1,665	11.1	11.1
63.50	0.0	3,115	20.8	20.8
64.00	0.0	5,081	33.9	33.9
64.50	1.1	7,595	50.7	51.8
65.00	3.1	10,677	71.2	74.3
65.50	4.7	14,384	95.9	100.6
66.00	5.4	18,773	125.2	130.6

Time increment (t) = 0.083 hrs.

EXECUTED: 11-26-1990 09:12:58

Pond File: a:ROSALIE6.PND
Inflow Hydrograph: a:ROS2 .HYD
Outflow Hydrograph: a:OUT .HYD

INFLOW HYDROGRAPH		ROUTING COMPUTATIONS				
TIME (hrs)	INFLOW (cfs)	I1+I2 (cfs)	2S/t - O (cfs)	2S/t + O (cfs)	OUTFLOW (cfs)	ELEVATION (ft)
0.000	0.00	-----	0.0	0.0	0.00	62.00
0.083	0.40	0.4	0.4	0.4	0.00	62.05
0.167	0.90	1.3	1.7	1.7	0.00	62.20
0.250	1.10	2.0	3.7	3.7	0.00	62.42
0.333	1.30	2.4	6.1	6.1	0.00	62.63
0.417	3.20	4.5	10.6	10.6	0.00	62.96
0.500	5.10	8.3	18.9	18.9	0.00	63.40
0.583	3.80	8.9	27.8	27.8	0.00	63.77
0.666	2.40	6.2	34.0	34.0	0.01	64.00
0.750	1.90	4.3	37.7	38.3	0.27	64.12
0.833	1.40	3.3	40.2	41.0	0.44	64.20
0.916	1.30	2.7	41.8	42.9	0.55	64.25
1.000	1.10	2.4	42.9	44.2	0.63	64.29
1.083	0.90	2.0	43.5	44.9	0.68	64.31
1.166	0.70	1.6	43.8	45.1	0.69	64.31
1.250	0.70	1.4	43.8	45.2	0.69	64.32
1.333	0.70	1.4	43.8	45.2	0.69	64.32
1.416	0.50	1.2	43.6	45.0	0.69	64.31
1.499	0.30	0.8	43.1	44.4	0.65	64.29
1.583	0.20	0.5	42.4	43.6	0.60	64.27
1.666	0.00	0.2	41.5	42.6	0.54	64.24

********** SUMMARY OF ROUTING COMPUTATIONS **********

Pond File: a:ROSALIE6.PND
Inflow Hydrograph: a:ROS2 .HYD
Outflow Hydrograph: a:OUT .HYD

Starting Pond W.S. Elevation = 62.00 ft

***** Summary of Peak Outflow and Peak Elevation *****

Peak Inflow = 5.10 cfs
Peak Outflow = 0.69 cfs
Peak Elevation = 64.32 ft

***** Summary of Approximate Peak Storage *****

Initial Storage = 0 cu-ft
Peak Storage From Storm = 6,668 cu-ft

Total Storage in Pond = 6,668cu-ft

Pond File: a:ROSALIE6.PND
Inflow Hydrograph: a:ROS2 .HYD
Outflow Hydrograph: a:OUT .HYD

EXECUTED: 11-26-1990
09:12:58

Peak Inflow = 5.10 cfs
Peak Outflow = 0.69 cfs
Peak Elevation = 64.32 ft

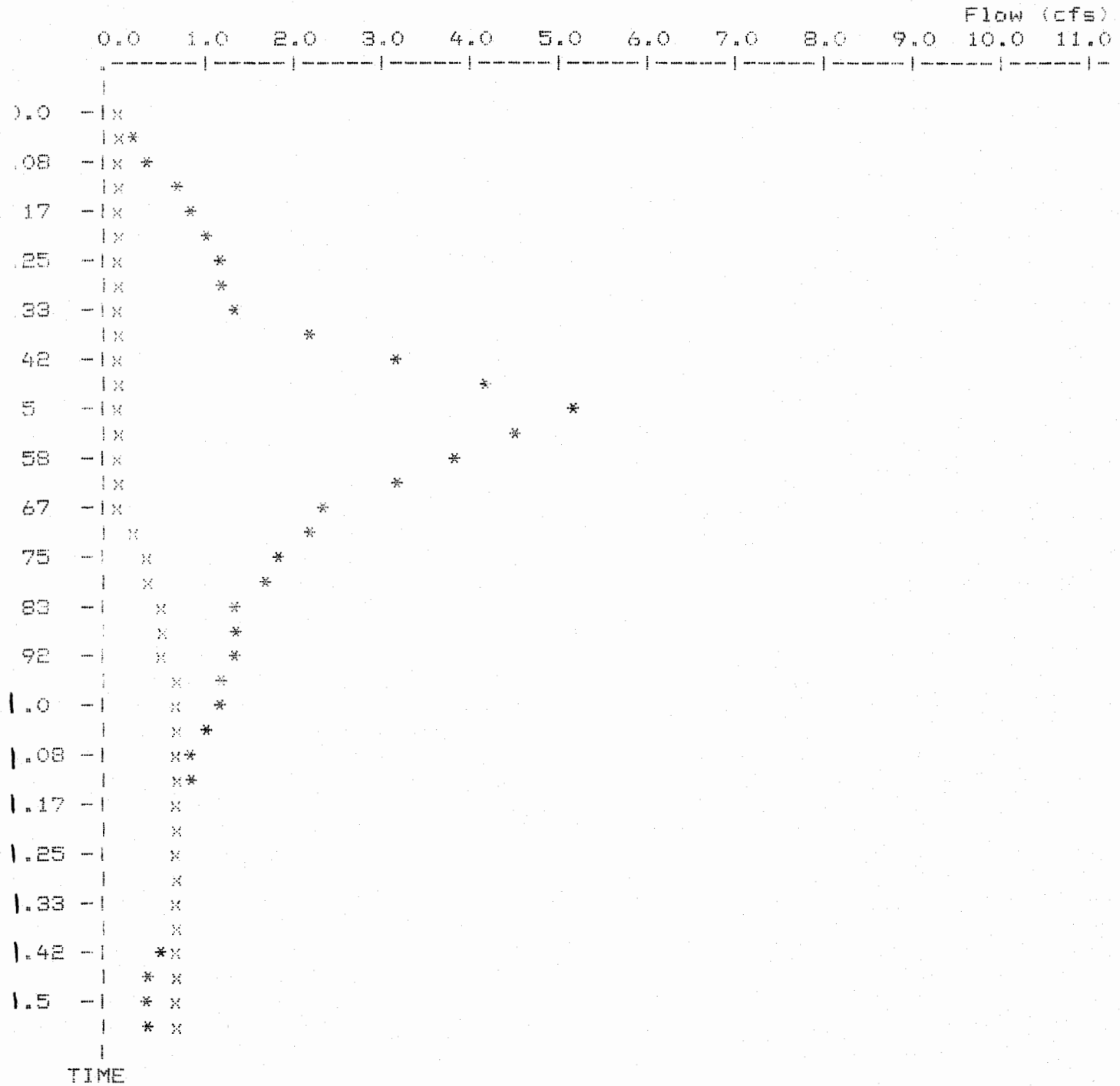

* File: a:ROS2 .HYD Qmax = 5.1 cfs
x File: a:OUT .HYD Qmax = 0.7 cfs

Inflow Hydrograph: a:ROS10 .HYD
Rating Table file: a:ROSALIE6.PND

----INITIAL CONDITIONS----
Elevation = 62.00 ft
Outflow = 0.00 cfs
Storage = 0 cu-ft

GIVEN POND DATA			INTERMEDIATE ROUTING COMPUTATIONS	
ELEVATION (ft)	OUTFLOW (cfs)	STORAGE (cu-ft)	2S/t (cfs)	2S/t + O (cfs)
62.00	0.0	0	0.0	0.0
62.50	0.0	653	4.5	4.5
63.00	0.0	1,665	11.6	11.6
63.50	0.0	3,115	21.6	21.6
64.00	0.0	5,081	35.3	35.3
64.50	1.1	7,595	52.7	53.8
65.00	3.1	10,677	74.1	77.2
65.50	4.7	14,384	99.9	104.6
66.00	5.4	18,773	130.4	135.8

Time increment (t) = 0.080 hrs.

EXECUTED: 11-26-1990 09:13:50

Pond File: a:ROSALIE6.PND
Inflow Hydrograph: a:ROS10 .HYD
Outflow Hydrograph: a:OUT .HYD

INFLOW HYDROGRAPH / ROUTING COMPUTATIONS

TIME (hrs)	INFLOW (cfs)	I1+I2 (cfs)	2S/t - O (cfs)	2S/t + O (cfs)	OUTFLOW (cfs)	ELEVATION (ft)
0.000	0.00	-----	0.0	0.0	0.00	62.00
0.080	0.70	0.7	0.7	0.7	0.00	62.09
0.160	1.50	2.2	2.9	2.9	0.00	62.32
0.240	1.70	3.2	6.1	6.1	0.00	62.61
0.320	1.80	3.5	9.6	9.6	0.00	62.86
0.400	4.20	6.0	15.6	15.6	0.00	63.20
0.480	6.60	10.8	26.4	26.4	0.00	63.67
0.560	5.00	11.6	37.7	38.0	0.16	64.07
0.640	3.30	8.3	44.7	46.0	0.63	64.29
0.720	2.60	5.9	48.8	50.6	0.91	64.41
0.800	1.90	4.5	51.2	53.3	1.07	64.49
0.880	1.70	3.6	52.4	54.8	1.18	64.52
0.960	1.50	3.2	53.1	55.6	1.25	64.54
1.040	1.30	2.8	53.4	55.9	1.28	64.54
1.120	1.10	2.4	53.2	55.8	1.26	64.54
1.200	1.10	2.2	53.0	55.4	1.24	64.53
1.280	1.10	2.2	52.7	55.2	1.21	64.53
1.360	0.90	2.0	52.4	54.7	1.18	64.52
1.440	0.80	1.7	51.8	54.1	1.12	64.51
1.520	0.40	1.2	50.9	53.0	1.05	64.48
1.600	0.00	0.4	49.4	51.3	0.95	64.43

********** SUMMARY OF ROUTING COMPUTATIONS **********

Pond File: a:ROSALIE6.PND
Inflow Hydrograph: a:ROS10 .HYD
Outflow Hydrograph: a:OUT .HYD

Starting Pond W.S. Elevation = 62.00 ft

***** Summary of Peak Outflow and Peak Elevation *****

Peak Inflow = 6.60 cfs
Peak Outflow = 1.23 cfs
Peak Elevation = 64.54 ft

***** Summary of Approximate Peak Storage *****

Initial Storage = 0 cu-ft
Peak Storage From Storm = 7,866 cu-ft

Total Storage in Pond = 7,866cu-ft

Pond File: a:ROSALIE6.PND
Inflow Hydrograph: a:ROS10 .HYD
Outflow Hydrograph: a:OUT .HYD

EXECUTED: 11-26-1990
09:13:50

Peak Inflow = 6.60 cfs
Peak Outflow = 1.28 cfs
Peak Elevation = 64.54 ft

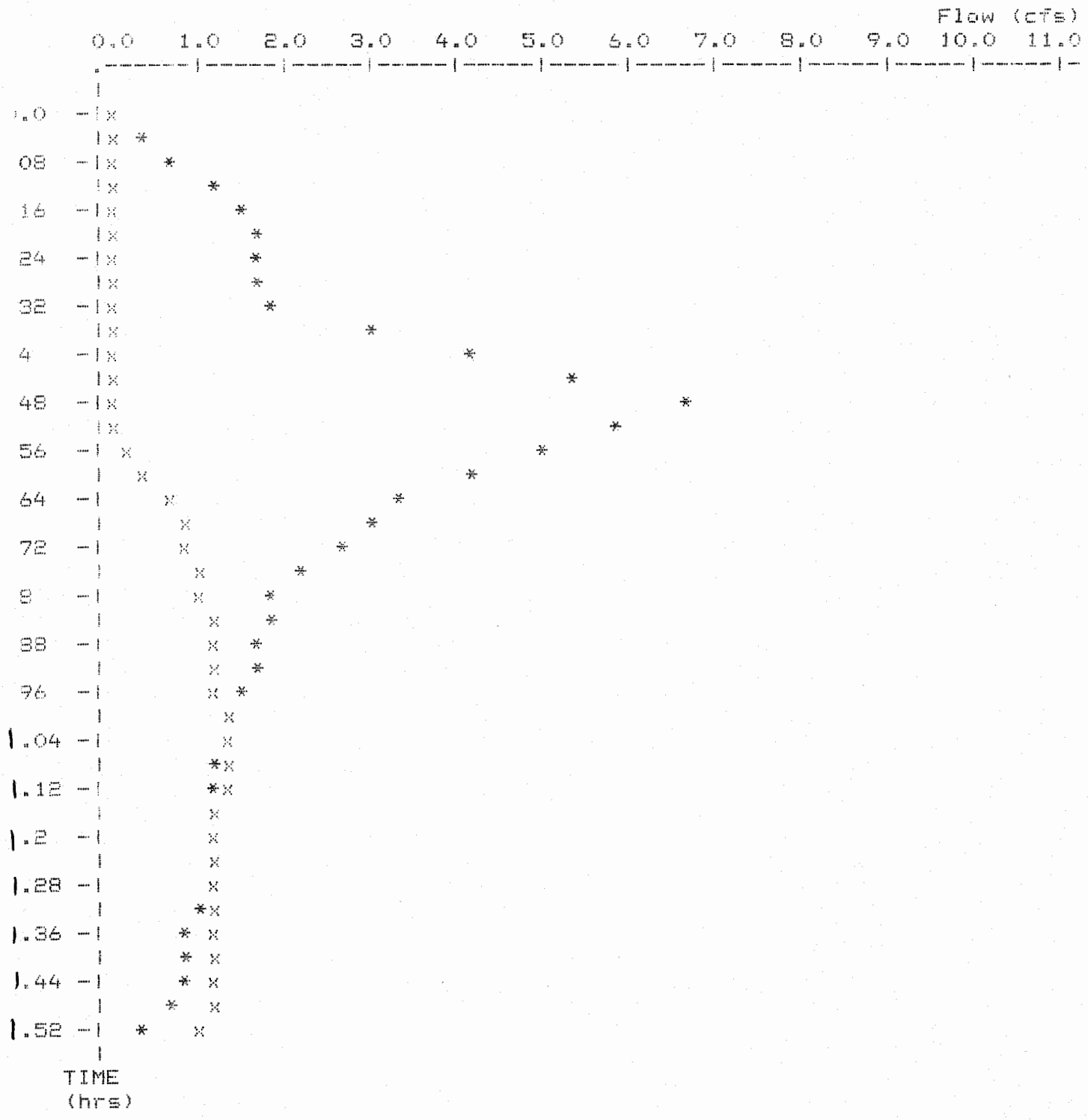

* File: a:ROS10 .HYD Qmax = 6.6 cfs
x File: a:OUT .HYD Qmax = 1.3 cfs

Inflow Hydrograph: a:ROS100 .HYD
Rating Table file: a:ROSALIE6.PND

-----INITIAL CONDITIONS-----
Elevation = 62.00 ft
Outflow = 0.00 cfs
Storage = 0 cu-ft

GIVEN POND DATA

ELEVATION (ft)	OUTFLOW (cfs)	STORAGE (cu-ft)
62.00	0.0	0
62.50	0.0	653
63.00	0.0	1,665
63.50	0.0	3,115
64.00	0.0	5,081
64.50	1.1	7,595
65.00	3.1	10,677
65.50	4.7	14,384
66.00	5.4	18,773

INTERMEDIATE ROUTING COMPUTATIONS

2S/t (cfs)	2S/t + O (cfs)
0.0	0.0
4.5	4.5
11.6	11.6
21.6	21.6
35.3	35.3
52.7	53.8
74.1	77.2
99.9	104.6
130.4	135.8

Time increment (t) = 0.080 hrs.

Pond File: a:ROSALIE6.PND
Inflow Hydrograph: a:ROS100 .HYD
Outflow Hydrograph: a:OUT .HYD

INFLOW HYDROGRAPH		ROUTING COMPUTATIONS				
TIME (hrs)	INFLOW (cfs)	I1+I2 (cfs)	2S/t - O (cfs)	2S/t + O (cfs)	OUTFLOW (cfs)	ELEVATION (ft)
0.000	0.00	-----	0.0	0.0	0.00	62.00
0.080	0.90	0.9	0.9	0.9	0.00	62.10
0.160	1.80	2.7	3.6	3.6	0.00	62.40
0.240	2.20	4.0	7.6	7.6	0.00	62.72
0.320	2.60	4.8	12.4	12.4	0.00	63.04
0.400	5.90	8.5	20.9	20.9	0.00	63.46
0.480	9.10	15.0	35.8	35.9	0.04	64.02
0.560	7.20	16.3	50.1	52.1	1.00	64.45
0.640	5.20	12.4	58.8	62.5	1.84	64.69
0.720	4.20	9.4	63.6	68.2	2.33	64.81
0.800	3.20	7.4	65.9	71.0	2.56	64.87
0.880	2.70	5.9	66.5	71.8	2.63	64.88
0.960	2.20	4.9	66.2	71.4	2.60	64.87
1.040	1.80	4.0	65.2	70.2	2.50	64.85
1.120	1.30	3.1	63.6	68.3	2.34	64.81
1.200	1.30	2.6	61.9	66.2	2.16	64.76
1.280	1.30	2.6	60.5	64.5	2.01	64.73
1.360	1.20	2.5	59.2	63.0	1.88	64.70
1.440	1.10	2.3	58.0	61.5	1.76	64.66
1.520	0.50	1.6	56.4	59.6	1.59	64.62
1.600	0.00	0.5	54.2	56.9	1.36	64.57

********** SUMMARY OF ROUTING COMPUTATIONS **********

Pond File: a:ROSALIE6.PND
Inflow Hydrograph: a:ROS100 .HYD
Outflow Hydrograph: a:OUT .HYD

Starting Pond W.S. Elevation = 62.00 ft

***** Summary of Peak Outflow and Peak Elevation *****

Peak Inflow = 9.10 cfs
Peak Outflow = 2.63 cfs
Peak Elevation = 64.88 ft

***** Summary of Approximate Peak Storage *****

Initial Storage = 0 cu-ft
Peak Storage From Storm = 9,954 cu-ft

Total Storage in Pond = 9,954cu-ft

Pond File: a:ROSALIE6.PND
Inflow Hydrograph: a:ROS100 .HYD
Outflow Hydrograph: a:OUT .HYD

EXECUTED: 11-26-1990
09:14:54

Peak Inflow = 9.10 cfs
Peak Outflow = 2.63 cfs
Peak Elevation = 64.88 ft

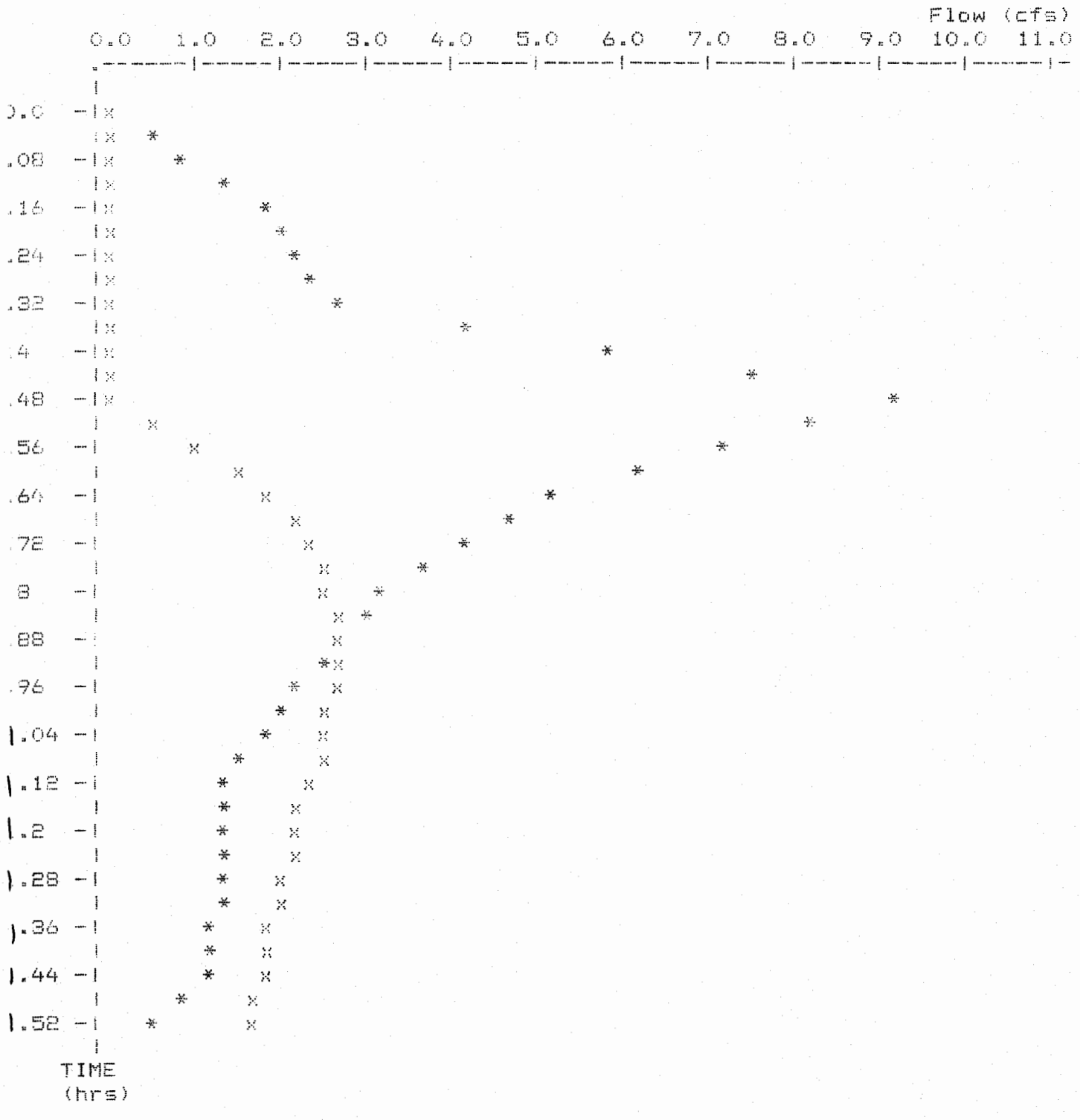

* File: a:ROS100 .HYD Qmax = 9.1 cfs
x File: a:OUT .HYD Qmax = 2.6 cfs

TABLE 3

WORKSHEET FOR BMP POINT SYSTEM

A. STRUCTURAL BMP POINT ALLOCATION

BMP	BMP Points		Fraction of Site Served by BMP		Weighted BMP Points
A (3)	9	x	43%	=	3.87
A (3)	9	x	12%	=	1.08
		x		=	
		x		=	

TOTAL WEIGHTED STRUCTURAL BMP POINTS: 4.95

B. NATURAL OPEN SPACE CREDIT

Fraction of Site		Natural Open Space Credit		Points for Natural Open Space
52%	x	.1	=	5.2
50%		(0.1 per 1%)		5.0

C. TOTAL WEIGHTED POINTS

4.95	+	~~5.2~~ 5.0	=	10.15 9.95
Structural BMP Points		Natural Open Space Points		TOTAL

Total Site 10.05
ROW 1.15
Lots 3.65
Lots Not to 1 0.56
LPZ on Lots 0.71

Area to Pond 1 = 4.24
2

Cleared area = 1.0 ac

ROSALIE ESTATES (JCC CASE NO. S-56-90)

TABLE 3

WORKSHEET FOR BMP POINT SYSTEM

A. STRUCTURAL BMP POINT ALLOCATION

BMP	BMP Points		Fraction of Site Served by BMP		Weighted BMP Points
POND #1	9	x	0.43 (ON SITE)	=	3.85
POND #1	9	x	0.37 (OFF SITE)	=	3.31
		x		=	
		x		=	

TOTAL WEIGHTED STRUCTURAL BMP POINTS: 7.16

B. NATURAL OPEN SPACE CREDIT

Fraction of Site		Natural Open Space Credit (0.1 per 1%)		Points for Natural Open Space
43%	x	0.1	=	4.3

C. TOTAL WEIGHTED POINTS

7.16	+	4.3	=	11.46
Structural BMP Points		Natural Open Space Points		TOTAL

TOTAL PARCEL = 10.05 ACRES

7/24/92 REVISED TO ACCOUNT FOR OFFSITE STORMWATER PASSING THROUGH POND #1

WATERSHED	MC	MAINTENANCE PLAN	No	CTRL STRUC DESC	CMP Riser
BMP ID NO	010	SITE AREA acre	10.04	CTRL STRUC SIZE inches	24
PLAN NO	S-56-90	LAND USE	Gen Residential	OTLT BARRL DESC	CMP Barrel
TAX PARCEL	(38-04)(21-1A)	old BMP TYP	Dry Shallow Marsh	OTLT BARRL SIZE inch	12
PIN NO	3842100001A	JCC BMP CODE			
CONSTRUCTION DATE	1/1/1993	POINT VALUE	9	EMERG SPILLWAY	Yes
PROJECT NAME	Rosalie Estates (BMP # 1)			DESIGN HW ELEV	65.99
FACILITY LOCATION	3926 Vass Lane			PERM POOL ELEV	62.7
CITY-STATE	Williamsburg, Va. 23188	SVC DRAIN AREA acres	8	2-YR OUTFLOW cfs	2.30
CURRENT OWNER	The Mill Associates Development Co.			10-YR OUTFLOW cfs	3.90
OWNER ADDRESS	112 Maxwell Place			REC DRAWING	Yes
OWNER ADDRESS 2		SERVICE AREA DESCRI	SF Lots & Roadways		
CITY-STATE-ZIP CODE	Williamsburg, Va. 23185	IMPERV AREA acres	3.02	CONSTR CERTI	No
OWNER PHONE	757-229-5188	RECV STREAM	UT to Mill Creek		
MAINT AGREEMENT	No	EXT DET-WQ-CTRL	Yes	LAST INSP DATE	12/7/2000
EMERG ACTION PLAN	No	WTR QUAL VOL acre-ft	0.213	INTERNAL RATING	4
		CHAN PROT CTRL	No	MISC/COMMENTS	
		CHAN PROT VOL acre-ft	0	Vass Meadows form Masons Grant. Letter 07/18/01 items rqd prior to bond release.	
		SW/FLOOD CONTROL	Yes		
		GEOTECH REPORT	No		

Get Last BMP No

Return to Menu

DEVELOPMENT MANAGEMENT

101-E MOUNTS BAY ROAD, P.O. BOX 8784, WILLIAMSBURG, VIRGINIA 23187-8784
(757) 253-6671 Fax: (757) 253-6850 E-MAIL: devtman@james-city.va.us

CODE COMPLIANCE
(757) 253-6626
codecomp@james-city.va.us

ENVIRONMENTAL DIVISION
(757) 253-6670
environ@james-city.va.us

PLANNING
(757) 253-6685
planning@james-city.va.us

COUNTY ENGINEER
(757) 253-6678

INTEGRATED PEST MANAGEMENT
(757) 259-4116

S-56-90

MC 010 (BMP #1) DRY DET BASIN (EM)
GPIN 38421 00001 A
3926 VASS LANE

THE MILL ASSOCIATES
112 MAXWELL PLACE
WMG VA 23185

5.696 AC
R2 GEN RES.

July 18, 2001

Mr. Charles Glazener
The Mill Associates Development Co.
112 Maxwell Place
Williamsburg, VA 23185

Re: Rosalie Estates (Vass Meadows)

Dear Mr. Glazener:

The purpose of this letter is to inform you that the $10,000 Letter of Credit No. RCH/P800150 for the above referenced project expires on August 12, 2001. As stated in the Subdivision and Siltation Agreements, prior to release of this surety all improvements must be complete and accepted by the appropriate agency. The remaining item to be completed is the maintenance on the BMP facility. Trees growing on the dam embankment will need to be removed and those areas will need to be stabilized with seed and mulch. Once this item has been completed, the letter of credit will no longer need to be extended. Please see the attached article on dam maintenance that describes the problems trees can cause to dam structures.

James City County will grant an extension to this Letter of Credit for up to one year. We will require delivery of the revised Letter of Credit to the **James City County Environmental Division, 101 Mounts Bay Road, Williamsburg VA 23185,** no later than 4:00 p.m., **August 3, 2001**, to avoid draw of existing surety.

Sincerely,

Darryl E Cook

Darryl E. Cook
Environmental Director

cc: SunTrust Bank

FILE -

Langley and McDonald, P.C.

Engineers
Surveyors
Planners
Landscape Architects
Environmental Consultants

GEORGE E. LANGLEY
Consultant
J. JOSEPH McDONALD
1906-1982

October 26, 1992

RECEIVED 10-28-92

Mr. Darryl E. Cook
Development Engineer
Dept. of Development Management
P. O. Box JC
Williamsburg, VA 23187-3627

Re: Rosalie Estates

Dear Mr. Cook:

We have received a copy of your letter to Mr. Steve Massie, dated October 13, 1992, regarding the referenced project and are requesting that you provide the documentation to support your allegation that the core trench for the detention pond dam was constructed improperly. More specifically, we request that you send us a copy of the current published county requirements for detention pond dams. In addition, we request that you provide us information to support your statements that the core trench was not constructed with the proper side slopes, improperly compacted, and not built on a suitable base.

Please be advised that as the engineer of record, Langley and McDonald is concerned about any modification to the original design of our construction plans and request that you send us copies of any suggested modifications to our plans should you feel compelled to do so in the future.

If you have any questions or wish to discuss this, please do not hesitate to contact us.

Best regards,

LANGLEY AND McDONALD

Stephen Romeo

Stephen A. Romeo, L.S.
Principal

SAR/rsw
cc: File 90051
Mr. Stephen L. Massie

MAIN OFFICE
5544 Greenwich Road
Virginia Beach, VA 23462
(804) 473-2000
FAX: (804) 497-7933

201 Packets Court
Williamsburg, VA 23185
(804) 253-2975
FAX: (804) 229-0049

JACK L. MASSIE
CONTRACTOR, INC.

Road & Site Construction
Since 1947
3900 Cokes Lane
Williamsburg, VA 23188-7010
(804) 566-8643
FAX (804) 566-8566

October 19, 1992

RECEIVED 10-20-92

Mr. Darryl E. Cook
Development Engineer
DEPT. OF DEVELOPMENT MANAGEMENT
P. O. Box JC
Williamsburg, VA 23187-3627

RE: ROSALIE ESTATES

Dear Mr. Cook:

Your letter of October 13, 1992 stated that we constructed the detention basin dam, at Rosalie Estates, in an improper manner. I must take exception to this statement. The dam was constructed in the following manner:

- We cut off all stumps flush with the existing ground.
- We removed underbrush from the area of the dam but left the stumps and rootmat.
- We excavated the core to a width of 5 to 6 feet. The width of the backhoe bucket was 5 feet. This width is 25% to 50% greater than the state standard. - minimum
- We excavated the core to a depth that removed all of the organic material and left a subbase of clay material that was firm enough for us to walk on. If we had excavated any lower we would have run into so much ground water that the material would have been saturated to the point that we would not have been able to walk on it. This was verified by our sanitary sewer installation that took place in this area. The average depth of the core excavation was approximately 4 feet. This is 200% deeper than the state standard. - minimum
- The top 1.5 - 2 feet of the core was widened approximately 1-2 feet on each side. This prevented any rootmat material from entering the core during the backfilling operation. - No
- The core was excavated in 10 to 20 foot increments. It was immediately backfilled to prevent water from infiltrating the core and making it unsuitable for backfilling.
- The core was backfilled by a D-3 bulldozer shoving a mat of fill material into the core. This prevented any of the subbase material from pumping up into the core material. If this pumping had occurred, the integrity of the core would have been destroyed. - No inspection
- We then placed a 2 to 2-1/2 foot thick mat of fill material over the entire width of the dam area.

- The remainder of the dam height was constructed by running a fully loaded caterpillar 627 scraper over this mat. The dam was constructed in such a manner that pumping of the subgrade occurred in only one area. This area was undercut and backfilled to stop further pumping.
- The dam was constructed to a height of 0.5 feet above that shown in the typical section.
- The dam was topsoiled to aid in the establishment of a grass cover.

I believe we have complied with Mr. Witsman's directions during the construction of this dam. In fact, I believe we have exceeded his guidelines for construction. The behavior of the dam, during construction, showed its stability and strength.

I can assure you that JACK L. MASSIE CONTRACTOR, INC. will not do anything to jeopardize the integrity of any project or the reputation of our company. We will always use proper construction techniques and proceed in a logical and orderly fashion. We will always strive for excellence in our work. We will work with the owner, county, municipality or state in complying with all standards. However, as conditions vary, construction methods must vary in order to get the desired result. Everyone must recognize this and strive to do what is best for the project.

Sincerely,

JACK L. MASSIE CONTRACTOR, INC.

Steve L. Massie
Vice President

SLM/lg

Enclosure

cc: Mr. Charlie Glazener/Mill Associates
Mr. Steve Romeo/Langley & McDonald

FILE

Langley and McDonald, P.C.

Engineers
Surveyors
Planners
Landscape Architects
Environmental Consultants

GEORGE E. LANGLEY
Consultant
J. JOSEPH McDONALD
1906-1982

RECEIVED 11-9-92

November 4, 1992

Mr. Darryl Cook
Code Compliance
James City County
P. O. Box JC
Williamsburg, VA 23187

Re: Rosalie Estates

Dear Mr. Cook:

We have received a copy of your notice to comply dated November 3, 1992, as it was sent to the developer of this project, and we take this opportunity to express our concerns. A solid cover for the trash rack in accordance with the Virginia Erosion and Sedimentation Control Handbook detail that you have referenced was not shown on the plans for several reasons. One reason is that this detail is for a temporary sediment basin. Another reason is that we are certain that this feature would affect the performance of the device under orifice conditions and would result in an increase of the peak elevation for a given storm routed through the structure. Another reason for our reluctance to use this design for permanent installation, is that representatives of the manufacturer of these products have cautioned that the use of the solid cover can lead to failure of the standpipe if the pressure relief holes and annular space between the standpipe and trash rack become clogged with debris. We were informed this morning, that the contractor anticipates taking delivery of the cover for the trash rack around November 6, 1992. By copy of this letter, we are instructing the contractor to install the cover to the trash rack, however, this is to be done at the request of the County and is not recommended by the Engineer. We are also recommending that several additional pressure relief holes be drilled in the top of this cover. We have many other reasons that we do not believe that the closed top is appropriate and can show many examples of facilities operating satisfactorily without such a top. One of these facilities is on a recently constructed County project.

MAIN OFFICE
5544 Greenwich Road
Virginia Beach, VA 23462
(804) 473-2000
FAX: (804) 497-7933

201 Packets Court
Williamsburg, VA 23185
(804) 253-2975
FAX: (804) 229-0049

Mr. Darryl Cook
Code Compliance
James City County
P. O. Box JC
Williamsburg, VA

November 4, 1992

Pursuant to our meeting with the contractor on-site on October 30, 1992, it was our understanding that the work around the 24 inch storm sewer outfall pipe would be attended to this week. The contractor informed us today that due to this past weekend's rain, conditions have not been favorable for him to proceed with this work. We understand and agree with the contractor's reason for delaying the completion of this work until conditions are favorable for him to do so, as we believe that the newly constructed detention pond would function as a sediment basin. Additionally, the contractor has informed us that this run of sewer was completed the afternoon of October 23, 1992. Therefore, in accordance with Erosion and Sediment Control Note 10 on the approved plans, your notice to comply is inappropriate as it is premature.

We disagree with your opinion that synthetic EC-3 type stabilization is necessary to stabilize the swales in the sanitary sewer easements. It is our understanding that the contractor has seeded the easements areas and that grass is starting to grow in these areas. It is our opinion that the recommendations stated in our previous letter will be adequate.

We are concerned that such drastic measures are taken by the County for what really amounts to be an insignificant problem. It is our opinion that the existing erosion and sediment control measures are performing their intended function as evidenced by the apparent absence of transported sediment down stream of the site. We also believe that the inspection reports and notice to comply are not being used in the manner which they were intended to be used, (i.e. replace breached straw barriers or silt fence, remedy areas where erosion is occurring etc.).

Lastly, we are concerned about the inconsistency of your review of sites under construction. It almost appears that certain rules apply to some that do not apply to others. A specific reference in this regard is the absence of the trash rack cover on the principal spillway for the detention basin at the newly constructed middle school in Toano. There are several other locations in the County that employ stormwater detention devices that do not meet you definition of "the County standard".

Mr. Darryl Cook
Code Compliance
James City County
P. O. Box JC
Williamsburg, VA

November 4, 1992

We believe that it would be prudent to schedule a meeting on-site in order to resolve these issues. Please contact us at your earliest convenience in this regard.

Thank you,

LANGLEY AND McDONALD

Stephen A. Romeo, L.S.,
Principal

SAR/dhm
cc: Mr. Steven L. Massie

Jamestown 1607
JAMES CITY COUNTY

DEPARTMENT OF DEVELOPMENT MANAGEMENT
P.O. Box JC
Williamsburg, Virginia 23187-3627

COUNTY GOVERNMENT CENTER, 101E MOUNTS BAY ROAD

Development Manager
(804) 253-6671

Code Compliance
253-6626

County Engineer
253-6678

Planning
253-6685

Integrated Pest Management
253-2620

October 13, 1992

Mr. Steve Massie
Jack L. Massie Contractor, Inc.
3900 Cokes Lane
Williamsburg, VA 23187

RE: Rosalie Estates

Dear Mr. Massie:

We met onsite with Mr. Gary Witsman on October 5, 1992, to discuss the construction of the detention basin for the above project. Mr. Witsman is a geotechnical engineer with Schnabel Engineering Associates who was hired by Langley McDonald to evaluate the site conditions and the technique you proposed for construction of the dam embankment.

My concern with the construction technique you proposed was that differential settlement of the embankment could occur as a result of leaving unconsolidated organic material under the embankment. Given the small height of the embankment and the fact that the basin was to be a dry structure, it was concluded that the organic material could be left if a satisfactory core trench was constructed. Mr. Witsman followed up the meeting with a letter which outlined the acceptable construction method.

The letter stated that the core trench must be extend through the organic soils to suitable, undisturbed, non-organic soils and that the core trench should then be backfilled and compacted in accordance with the county requirements. Based on field inspections made during the construction of the dam's core trench, the trench was not constructed with the proper side slopes, nor was it properly compacted. It is also our opinion that the core trench was not built on a suitable base. Because of these deficiencies and as suggested in Mr. Witsman's letter, we recommend that the dam be constructed 6 inches higher than the design elevations to limit future maintenance of the embankment. This precautionary measure should compensate for any long-term settlement that might occur because of

Fax: (804) 253-6663

the core trench and embankment construction techniques.

Sincerely,

Darryl E Cook

Darryl E. Cook
Development Engineer

cc: Mill Associates Development Co.

DEPARTMENT OF DEVELOPMENT MANAGEMENT
P.O. Box JC
Williamsburg, Virginia 23187-3627

COUNTY GOVERNMENT CENTER, 101E MOUNTS BAY ROAD

Development Manager
(804) 253-6671

Code Compliance
253-6626

County Engineer
253-6678

Planning
253-6685

Integrated Pest Management
253-2620

November 6, 1992

Mr. Steve Romeo
Langley and McDonald
201 Packets Court
Williamsburg, VA 23185

RE: Rosalie Estates

Dear Mr. Romeo:

I would like to respond to your letter of November 4, 1992, which was written in response to our November 3, 1992, Notice to Comply for the above referenced project. Concerning the trash rack/anti-vortex device, the detail in the Virginia Erosion Control Handbook (VESCH) is for a temporary sediment basin because the state has no standards for permanent structures. However, the Division of Soil and Water Conservation is in the process of developing standards for permanent detention structures and it is my understanding that they are including this type of trash rack as one of their standards. Regardless, this item has been unresolved for too long.

The trash rack top is needed because it provides the trash and anti-vortex protection for the riser under higher flow conditions. Once the flow exceeds the top of the ring, there is no longer any trash or anti-vortex protection. Without the top, the flows have the potential to be reduced by up to 50% because of vortex action. I would need to reevaluate the performance of the design you submitted if no top is provided because design assumptions are always for full flow conditions, not flows reduced by vortex formation. In addition, I spoke with one of the state's dam safety engineers, Mr. Richard Dameron, and he strongly recommended a top be provided on the trash rack for several reasons. He feels that it is much more likely that debris carried by high flows would clog the riser and barrel of a pond protected by a device without a top as opposed to a trash rack with a top becoming clogged. He felt even more strongly about the need for the top considering the small diameter pipes in this basin. Also, some practical considerations are that a closed top does not present the safety hazards that an open top does, and it is much less susceptible to vandalism. The open top

Fax: (804) 253-6663

invites objects to thrown inside the riser. Further, we have had experience with open top small diameter trash racks and risers. One of these became clogged causing overtopping of the dam and erosion from the overtopping almost caused dam failure. For these reasons and others, we will continue to specify the VESCH standard for this type of riser design.

Concerning the outfall of the 24-inch pipe, the appropriate plan note for this situation is Erosion Control Note 8. This note states that "Outfall ditches from drainage structures shall be stabilized immediately after construction of same. This includes installation of erosion control stone where required." Note number 10 that you refer to is for restabilization of disturbed areas in general, not storm drain outfalls. As you stated the outfall was completed on October 23, 1992, our requirement in the Notice to Comply is appropriate and not premature.

In your letter to me dated October 21, 1992, you stated that your recommendation to the owner and contractor was to install excelsior matting rather than EC-3 matting to stabilize the existing swales referred to in our October 19, 1992, Inspection Report. To date the contractor has not implemented either recommendation, and therefore, we included this item in our recent Notice to Comply. We feel that the EC-3 matting is a better method to accomplish the necessary stabilization but we are not opposed to an attempt to stabilize the swales with excelsior matting. What is unacceptable, however, is continued inaction. EC-3 or excelsior matting must be installed immediately.

I agree that the items involved in the Notice to Comply would take an insignificant amount of money and effort to resolve. I cannot understand the reluctance of the contractor to address the items and the reaction of both you and the contractor. The use of inspection reports and Notices to Comply are standard procedures and have been used for many years. Despite assertions to the contrary, we have used similar reports and notices on other projects involving your firm and the contractor without getting such an adverse reaction. If better means of communication exist that meet our needs, we will certainly consider them.

I agree that it be beneficial to meet on-site to resolve these issues. I feel that we all have more productive things we could be doing than writing letters. I plan to

be contacting the developer to request such a meeting.

Sincerely,

Darryl E Cook

Darryl E. Cook
Development Engineer

cc: Mr. Steve Massie

TRANSMITTAL

DATE: July 30, 1992

TO: Wayland Bass

JUL 1992
RECEIVED
DEVELOPMENT
MANAGEMENT

FROM: Elizabeth R. Sullivan, Senior Planner

SUBJECT: Case No. S-62-91 Rosalie Estates

ITEMS ATTACHED:
BMP Worksheet
Red line plan
Letter

INSTRUCTIONS: Please review and comment. I understand that you have spoken with Mr. Romeo about the deletion of Pond 2. You may need to meet with Darryl and/or Bernie.

RETURN REQUIRED BY: August 10, 1992

AGENCY COMMENTS: OK IF DARRYL AGREES
WAB

RECEIVED
PLANNING DIVISION
JUL 1992

T. JOSEPH McDONALD
1906-1982

GEORGE E. LANGLEY
Consultant

Langley and McDonald
A Professional Corporation

July 24, 1992

Mr. O. Marvin Sowers
Director of Planning
Office of Planning and Development
James City County
P. O. Box JC
Williamsburg, VA 23187

JUL 1992
RECEIVED
PLANNING DEPARTMENT

Dear Mr. Sowers:

Accompanying this letter is a revised worksheet for Chesapeake Bay Preservation Ordinance Compliance for the Rosalie Estates project. We are also enclosing a print of the previously approved plan highlighting information relative to our request to delete pond #2.

Please do not hesitate to contact us if you have any questions, need additional information or wish to discuss this.

Best Regards,

LANGLEY AND McDONALD

Stephen Romeo

Stephen Romeo, L.S.,
Principal

SR/mkj
Enclosure
cc: Mr. Charles H. Glazener
Mr. Thomas K. Norment
L&M File: 90051

ENGINEERS • PLANNERS • SURVEYORS

MAIN OFFICES • 5544 GREENWICH ROAD • SUITE 200 • VIRGINIA BEACH • VIRGINIA • 23462 • TEL: (804) 473-2000 • FAX: (804) 497-7933
BUSCH CORPORATE CENTER • 201 PACKETS COURT • WILLIAMSBURG • VIRGINIA • 23185 • TEL: (804) 253-2975 • FAX: (804) 229-0049

James City County Stormwater Division Stormwater Management Facility (SWMF)Inspection Report

Score Definitions: 0-N/A, 1-Adequate, 2-Routine Maintenance, 3-Non-routine repair, 4-Urgent repair(s), item has failed or is failing.

BMP ID # MC010 PIN 3842100001A Responsible Party: VASS MEADOWS

Site Address: 3926 VASS LANE District: 4

Location (other):

Date: 9/16/2009 Inspector: RH

(3 or 4 requires attention):

Structure Type: **Extended Detention** Total Score 4

Criteria	Score	Comments: (Listed below are the items/tasks that should be rectified/ completed prior to re-inspection)
1. Forebay Score:	0	
2. Inlet(s):	2	**Sediment debris woody vegetation at the outfall of inlet**
*3. Outlet:	2	
*4. Principal Spillway:	2	
5. Emergency Spillway:	2	**Woody vegetation growing in spillway**
6. Basin Bottom and Side Slopes:	2	
7. Safety Devices:	0	
*8. Embankments:	2	**Woody vegetation within 10 feet of embankment**
*9. Structural Components:	4	**Settling cracking bulging misalignment and deterioration**
*10. Media:	0	

James City County Stormwater Division Stormwater Management Facility (SWMF)Inspection Report

Score Definitions: 0-N/A, 1-Adequate, 2-Routine Maintenance, 3-Non-routine repair, 4-Urgent repair(s), item has failed or is failing.

Criteria	Score	Comments: (Listed below are the items/tasks that should be rectified/ completed prior to re-inspection)
11. Routine Maintenance:	3	**Embankment access right of ways or forebay needs mowing to a minimum grass height of**
12. Condition of Aquatic Environment:	2	
13. Vegetation:	2	**Overall vegetation poor spotty unwanted or invasive weeds**
*14. Storage Volume:	2	
15. Debris/Sediment Accumulation:	2	
16. Standing Water:	1	
17. Safety and Aquatic Bench:	0	
18. Side Slope Vegetation:	2	
19. Other:	0	

Checked below identify corrective work required on your stormwater management facility.

- ☑ Remove all trees and other woody vegetation from the embankment (earthen dam) and also within 10' of the toe of the embankment slope.
- ☑ Remove all trees and other woody vegetation from within 10' of the principal spillway, any principal inlet devices, and the principal outfall.
- ☑ Remove all trees and other woody vegetation from within 10' of any inlet structures, such as: pipes, end sections, concrete channels, flumes, rip rap channels, etc.
- ☑ Remove all trees and other woody vegetation from within the emergency spillway and also from within 10' of the spillway.
- ☑ Investigate the cause of any settlement, sink holes, subsidence, or erosion, noted on the report and develop and implement an appropriate plan to correct the deficiencies noted permanently.
- ☑ Remove all accumulated sediment, leaves and debris from within any pipes, end sections, concrete channels, emergency spillways, flumes, rip rap channels, etc. and dispose of the material in an appropriate method and location.
- ☐ Stabilize any disturbed, unstable, denuded or bare soil areas, by installing top soil and planting a permanent grass seed to establish an effective grass ground cover over these areas.
- ☑ All grassed areas of the BMP such as: access roads, emergency spillways, embankments (earthen dam), or other non-treed areas, shall be maintained at a minimum grass height of 8", and should not be subjected to low mowing.
- ☑ Trees and woody vegetation should be cut flush with the ground, and smaller trees and limbs (less than 4" dia) may be processed with a wood chipper and dispersed in natural areas.

RECEIVED 10-8-92

SITE VISIT REPORT

SCHNABEL ENGINEERING ASSOCIATES
506B Copeland Drive
Hampton, Virginia 23661

CONTRACT NO. V921055
DATE SUBMITTED October 6, 1992

VISITED BY: Gary R. Witsman, P.E. - Associate

DATE: October 5, 1992

PROJECT: Rosalie Estates Stormwater Management Basin

TIME - Arrive: 3:45 PM
Leave: 5:00 PM

LOCATION: Ironbound Road
James City County, Virginia

WEATHER: Partly Cloudy, 65°F

PURPOSE OF VISIT:

To observe subgrade conditions in the area of proposed stormwater management basin embankment.

PERSONS ON SITE:

Steve Massie - Jack L. Massie Contractor, Inc.
Darryl E. Cook, P.E. - James City County, Virginia

DESCRIPTION OF OBSERVATIONS:

A stormwater detention basin is to be developed for the above referenced development. The basin is designed to detain runoff from the approximately 8 acre site for up to 24 hours. The proposed embankment will be a maximum of about 6 ft above the existing grades. The embankment will have an 8 ft wide crest and upstream and downstream slopes constructed at 3H:1V. The emergency spillway elevation will limit the maximum pond depth to about 3 ft. The basin has been essentially designed as a dry pond. The principal spillway invert has been set so that about 6 inches of water will be retained to encourage the development of wetland plants in the basin.

At the time of our visit, the formerly moderately wooded site had been cleared of all trees. The stumps and root mat were generally still in place. The contractor had removed a couple of stumps in the area of the proposed embankment. The disturbance to the saturated organic soils surrounding this area resulted in the soils essentially liquefying. These soils would not support a person or light-weight tracked construction equipment. Probing the area in several locations with a Geostick Penetrometer indicated little or no penetration resistance to the length of the 3 ft probe.

The contractor proposed a construction procedure which would maintain most of the stumps and root mat in place beneath the embankment. He believes the reinforcement provided by the existing root systems will allow him to excavate and backfill the key trench and establish a bridge lift of compacted fill for support of subsequent embankment fill operations.

RECOMMENDATIONS:

We discussed the apparent risks and benefits of the contractor's proposed construction process at the site meeting. It is our opinion that complete removal of the existing stumps and root mat within the embankment footprint would necessitate the subsequent removal and replacement of all soft, loose or disturbed soils beneath the embankment from toe to toe. While this would result in a firm foundation for the embankment, it would also produce a considerable volume of spoils which would have to be hauled off the site and would require an equal volume of select fill which we understand would probably have to be imported from an off-site borrow source.

We believe the contractor's concept of complete excavation and removal of organic soils, roots and stumps along the key trench and establishment of a bridge lift of fill over the remainder of the embankment area will also provide a stable vase for the new embankment. The procedure will simplify the subgrade preparation and should reduce the amount of excavation and replacement required prior to placement of the embankment fill.

The contractor proposes to excavate the key trench incrementally. The contractor should establish a working pad (probably timber mats) along the alignment of the key trench. This trench must be a minimum of 4 ft wide and must extend through the organic soils to suitable, undisturbed, non-organic soils. The minimum trench depth is 2 ft according to the county requirements, but may be significantly greater than this based on our limited site observations. The excavated portion of the key trench should then be backfilled and compacted in accordance with the county requirements. After this key trench fill has been completed, a bridge lift extended from the upstream toe to the downstream toe may be placed over this increment of the embankment. The backhoe may then move out onto this bridge lift and excavate the next increment of the key trench.

The process of excavating, backfilling and establishing a bridge lift for equipment support can the continue for the full length of the embankment. The alignment of the key trench should be generally kept within the area defined by the proposed embankment crest alignment. The trench alignment may be slightly modified as necessary to try and avoid stumps which have been left in place. When completed, the key trench must continue uninterrupted along the entire length of the embankment. Please note that all stumps which are located within the limits of the embankment should be cut as nearly flush with the existing grades as possible.

Construction of the bridge lift should work out from the face of the previously placed fill into the existing soft and loose subgrade soils. In this manner, the new fill may form a "mud wave" ahead of the face of the fill and the fill can displace any existing soils that are too soft, loose or disturbed to support the weight of the new fill. Construction traffic hauling loads of new fill over the recently placed fill will effectively proofroll the lift. If an area begins to pump or rut excessively under the construction traffic, the contractor should excavate and replace the unsuitable subgrade soils revealed by the construction traffic.

As construction of the key trench and bridge lift progresses, placement of embankment fill can then be started. The major settlement due the weight

of the new embankment fill should occur within the time frame of the construction process. The contractor may wish to crown the crest of the embankment by an additional 6 inches to limit future maintenance of the embankment which may be necessary due to unforeseen long-term settlements.

We have performed our services in accordance with generally accepted geotechnical engineering practices and make no other warranties, express or implied, as to the professional advice provided under the terms of our agreement and included in this site visit report.

We appreciate the opportunity to be of service on this project. Please contact either of the undersigned if you have any questions concerning this report.

Very truly yours,

SCHNABEL ENGINEERING ASSOCIATES, INC.

Gary R. Witsman, P.E.
Associate

COMMONWEALTH OF VIRGINIA
GARY WITSMAN
No. 016067
PROFESSIONAL ENGINEER

Gilbert T. Seese, P.E.
Associate

GTS:GRW:lem

DISTRIBUTION:

Langley and McDonald
Attn: Steve Romeo

Jack L. Massie Contractor, Inc.
Attn: Steve Massie

James City County
Attn: Darryl Cook, P.E.

LANDMARK DESIGN GROUP
Virginia Power
OLD IRONBOUND ROAD
VASS LANE
MC 010

ROSALIE ESTATES

1) Conservation Easement – Yes – been recorded

2) As-built dwgs – not reqd on plan –

3) Insp BMP – needs maintenance

4) Charlie Glazner – ~~253-3933~~ 229-5188