CERTIFICATE OF AUTHENTICITY

THIS IS TO CERTIFY THAT THE FOLLOWING ELECTRONIC RECORDS ARE TRUE AND ACCURATE REPRODUCTIONS OF THE ORIGINAL RECORDS OF JAMES CITY COUNTY GENERAL SERVICES DEPARTMENT- STORMWATER DIVISION; WERE SCANNED IN THE REGULAR COURSE OF BUSINESS PURSUANT TO GUIDELINES ESTABLISHED BY THE LIBRARY OF VIRGINIA AND ARCHIVES; AND HAVE BEEN VERIFIED IN THE CUSTODY OF THE INDIVIDUAL LISTED BELOW.

BMP NUMBER: **MC016**

DATE VERIFIED: **January 10, 2013**

QUALITY ASSURANCE TECHNICIAN: **Leah Hardenbergh**

Leah Hardenbergh

LOCATION: WILLIAMSBURG, VIRGINIA

Stormwater Division

MEMORANDUM

Date: March 29, 2012

To: Michael J. Gillis, Virginia Correctional Enterprises Document Management Services

From: Leah Hardenbergh

PO: 110426

Re: Files Approved for Scanning

General File ID or BMP ID:	**MC016**
PIN:	**4711900001A**
Owner Name (if known):	**SETTLER'S MILL**
Legal Property Description:	**COMMON AREA/CONSERVATION EASEMENT S-6 SETTLERS MILL**
Site Address:	**ADJACENT TO 116 HOLLY GROVE**

(For internal use only):

Box # 3

Agreements (in file as of scan date): Y Book or Doc #: DB 483 p 448

MC-016

Contents for Stormwater Management Facilities As-built Files

Each file is to contain:

1. As-built plan
2. Completed construction certification
3. Construction Plan
4. Design Calculations
5. Watershed Map
6. Maintenance Agreement
7. Correspondence with owners
8. Inspection Records
9. Enforcement Actions

Printed On 05/13/2008 By WOOLRIDGE

Book 0796 page 0124

MC016
~~MC 007~~
Settermill Sec. 6
(Hickory Sign)
Legal Desc:
Common Area/Conservation Easement 5-6 Settlers Mill
4711900001A
owner as of 5/15/00
Settler's Mill Association

069514

DECLARATION OF COVENANTS

INSPECTION/MAINTENANCE OF RUNOFF CONTROL FACILITY

THIS DECLARATION, made this 14TH day of June, 19 96, between Settler's Mill Inc., and all successors in interest, hereinafter referred to as the "COVENANTOR(S)," owner(s) of the following property: BMP #5, as shown on Sheet 6 of 9, Section 6, Settler's Mill Subdivision, James City County, Virginia Deed Book 483, Page 448.

and James City County, Virginia, hereinafter referred to as the "COUNTY."

WITNESSETH:

We, the COVENANTOR(S), with full authority to execute deeds, mortgages, other covenants, and all rights, titles and interests in the property described above, do hereby covenant with the COUNTY as follows:

1. The COVENANTOR(S) shall provide maintenance for the runoff control facility, hereinafter referred to as the "FACILITY," located on and serving the above-described property to ensure that the FACILITY is and remains in proper working condition in accordance with approved design standards, and with the law and applicable executive regulations.

2. If necessary, the COVENANTOR(S) shall levy regular or special assessments against all present or subsequent owners of property served by the FACILITY to ensure that the FACILITY is properly maintained.

3. The COVENANTOR(S) shall provide and maintain perpetual access from public right-of-ways to the FACILITY for the COUNTY, its agent and its contractor.

4. The COVENANTOR(S) shall grant the COUNTY, its agent and its contractor a right of entry to the FACILITY for the purpose of inspecting, operating, installing, constructing, reconstructing, maintaining or repairing the FACILITY.

5. If, after reasonable notice by the COUNTY, the COVENANTOR(S) shall fail to maintain the FACILITY in accordance with the approved design standards and with the law and applicable executive regulations, the COUNTY may perform all necessary repair or maintenance work, and the COUNTY may assess the COVENANTOR(S) and/or all property served by the FACILITY for the cost of the work and any applicable penalties.

6. The COVENANTOR(S) shall indemnify and save the COUNTY harmless from any and all claims for damages to persons or property arising from the installation, construction, maintenance, repair, operation or use of the FACILITY.

7. The COVENANTOR(s) shall promptly notify the COUNTY when the COVENANTOR(S) legally transfers any of the COVENANTOR(S)' responsibilities for the FACILITY. The COVENANTOR(S)' shall supply the COUNTY with a copy of any document of transfer, executed by both parties.

8. The covenants contained herein shall run with the land and shall bind the COVENANTOR(S) and the COVENANTOR(S)' heirs, executors, administrators, successors and assignees, and shall bind all present and subsequent owners of property served by the FACILITY.

9. This DECLARATION shall be recorded in the County Land Records.

MC016_COMMON_AREA_SETTLERS_MILL_SEC_3 - 004

Printed On 05/13/2008 By WOOLRIDGE

IN WITNESS WHEREOF, the COVENANTOR(S) have executed this DECLARATION OF COVENANTS as of this 14th day of June, 1996.

COVENANTOR(S)

Settlers Mill Inc.
By: [illegible], Pres.

ATTEST:

[illegible]

COVENANTOR(S)

Settlers Mill Inc
By. Stacy M. Nichols - Treasurer

ATTEST:

[illegible]

COMMONWEALTH OF VIRGINIA
CITY/COUNTY OF James City

I, the undersigned Notary Public, in and for the jurisdiction aforesaid, do certify that LARRY R. MCCARTLE, whose name is signed as such to the foregoing writing bearing date 14 day of June, 1996 this day sworn the same before me in my jurisdiction aforesaid.

GIVEN under my hand this 14 day of June, of 1996.

Marcelle W. Moore
Notary Public
Was commissioned as Marcelle W. Lynne

My Commission expires: 10-31-96

Approved as to form:

[illegible]

VIRGINIA: City of Williamsburg and County of James City

Court of the James City the 9 July 96. This Declaration of Covenants and [illegible] 9:08 o'clock

Teste: [illegible] Clerk
by [illegible]
Deputy Clerk

0261U.Wpf
Revised 9/92

File in MC016

970 008877

DEED OF EASEMENT

THIS DEED OF EASEMENT is made this 4th day of June, 1997, by and between **SETTLERS MILL INCORPORATED**, a Virginia Corporation, hereinafter referred to as Grantor and **SETTLERS MILL ASSOCIATION**, a Virginia Corporation, whose address is 1111 Old Colony Lane, Williamsburg, Va. 23185, hereinafter referred to as Grantee.

WITNESSETH: For and in consideration of the sum of One and No/100 Dollar ($1.00) cash in hand paid, the receipt of which is hereby acknowledged, Settlers Mill Incorporated does hereby grant, bargain and convey unto Settlers Mill Association an easement for the installation and maintenance of a concrete culvert pipe and concrete ditch on the locations shown and designated as "15" R.C.P." and "3' Conc Ditch" on the plat attached hereto "PLOT PLAN, LOT 24, SECTION 4, SETTLERS MILL, PREPARED FOR MICKEY SIMPSON BUILDER, INC., JAMESTOWN DISTRICT, JAMES CITY COUNTY, VIRGINIA" dated May 30, 1997 and prepared by AES Consulting Engineers of Williamsburg, Virginia. This easement is for the purpose of collection and channeling the surface water runoff. It may be assigned by Settlers Mill Association to any public body, including, but not limited to James City County, Virginia

WITNESS the following signature and seal:

SETTLERS MILL, INCORPORATED

By _____

JUN-6 97 0052

This document prepared by
Anderson, Franck & Davis, P C
1200 Old Colony Lane
Williamsburg, Virginia 23185
(757) 229 7322

D:\WPWIN\WPDOCS\TEMP\SETTLERS ESM

Printed On 10/24/2013 By JCC STORM WATER

STATE OF VIRGINIA

COUNTY OF JAMES CITY, to-wit:

The foregoing instrument was acknowledged before me by LARRY McCREDLE PRESIDENT of Settlers Mill, Incorporation, a Virginia Corporation, this 5TH day of JUNE, 1997

NOTARY PUBLIC

My commission expires. 11·30·99

VIRGINIA: City of Williamsburg and County of James City to Wit:
In the Clerk's Office of the Circuit Court of the City of Williamsburg and County of James City
6 June, 1997. This Deed of Easement was presented with certificate annexed and admitted to record at 11:06 o'clock
Teste. Helena S. Ward, Clerk
by Deputy Clerk

FLAT ATTACHED

JUN-6-97 00053

This document prepared by
Anderson, Franck & Davis, P C
1200 Old Colony Lane
Williamsburg, Virginia 23185
(757) 229 7322

D:\WPWIN\WPDOCS\TEMP\SETTLERS ESM

GENERAL NOTES:

1. BOUNDARY, EASEMENTS AND SETBACK INFORMATION AS SHOWN WAS TAKEN FROM RECORD PLAT. TOPOGRAPHY TAKEN FROM COUNTY TOPOGRAPHIC MAPS.
2. HOUSE DIMENSIONS BASED ON INFORMATION AS SUPPLIED BY OWNER OR CONTRACTOR. CONTRACTOR TO VERIFY ALL DIMENSIONS, ALIGNMENTS AND PROVISIONS.
3. ALL TREES MAY BE REMOVED WITHIN THE CLEARING LIMITS SHOWN HEREON.
4. SILT FENCE TO BE PROVIDED ON DOWNSLOPE OF ALL DISTURBED AREAS.
5. CONTRACTOR TO PROVIDE STANDARD V.D.O.T. COARSE AGGREGATE #1 STONE CONSTRUCTION ENTRANCE. UNLESS OTHERWISE NOTED, CONTRACTOR TO PROVIDE A MINIMUM OF 24' OF 15" R.C.P. ENTRANCE CULVERT.

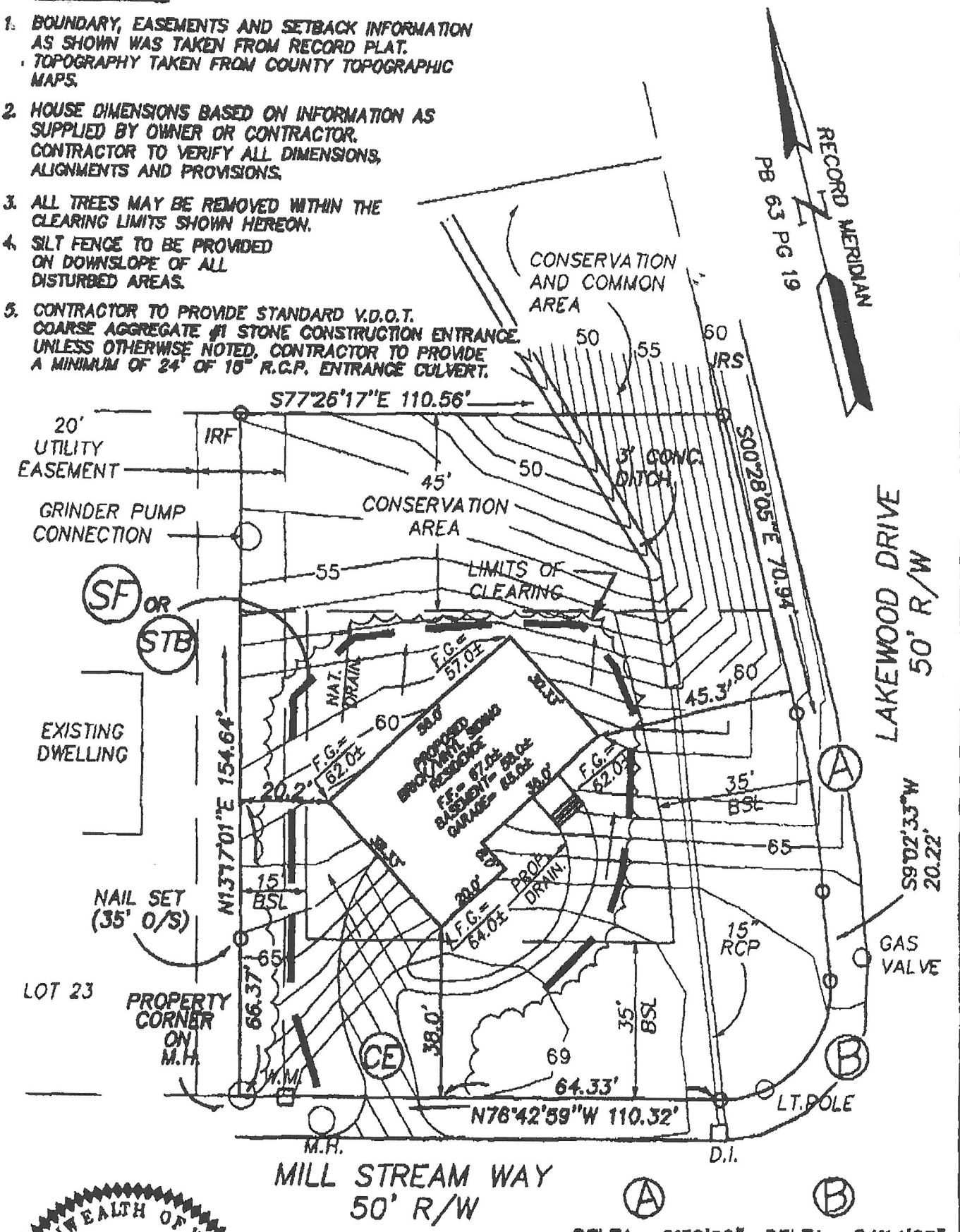

COMMONWEALTH OF VIRGINIA
G.T. WILSON, JR.
CERTIFICATE No. 1183
CERTIFIED LAND SURVEYOR

AREA LOT 24
19,594 S.F.±
0.4498 AC.±

A	B
DELTA= 9°30'29"	DELTA= 94°14'28"
R= 245.00'	R= 25.00'
L= 40.66'	L= 41.12'
T= 20.38'	T= 26.92'
C= 40.61'	C= 36.64'
CB= S4°17'14"W	CB= S56°09'47"W

STREET ADDRESS: #200 MILLSTREAM WAY

JUN-6-95 0054

MC007, MC016, MC029, MC030

090027576

VIRGINIA:

IN THE CIRCUIT COURT FOR THE CITY OF WILLIAMSBURG
AND JAMES CITY COUNTY

SETTLERS MILL ASSOCIATION,

Plaintiff,

v. Civil Case No. CL08-657-00

LAWRENCE E. LUCK
and
TRACY M. LUCK,

Defendants.

FINAL JUDGMENT ORDER

On September 18, 2009 came the Plaintiff, Settlers Mill Association, and the Defendants, Lawrence E. Luck and Tracy M. Luck, in person and by counsel, on the Plaintiff's Complaint for declaratory judgment. Upon consideration whereof, and the pleadings and papers filed herein, and of the evidence and argument of counsel, *ore tenus*, the Court finds and declares:

A. That, as pertaining to Lot 29 ("Lot 29") as shown on Plat of Lakewood Section II Lot 1 thru Lot 29, which is recorded in Plat Book 45, page 80 in the land records of the Clerk of this Court, the First Amendment to Declaration of Covenants and Restrictions ("First Amendment"), which is recorded in Deed Book 476, page 143 in the land records of the Clerk of this Court and Second Amendment to Declaration of Covenants and Restrictions ("Second Amendment"), which is recorded as Instrument No. 050026910 in the land records of the Clerk of this Court, as corrected by Correction of Clerical Error, which is recorded as Instrument No. 070025362 in the land records of the Clerk of this Court are not valid amendments of the Declaration of Covenants and Restrictions, which is recorded in Deed Book 352, page 122 in the

land records of the Clerk of this Court ("Original Declaration);

B. That Lot 29 is not subject to the provisions of the Original Declaration, as amended; and,

C. That Lot 29 is not subject to architectural review as described in the Original Declaration, as amended. Accordingly, it is

ORDERED that judgment be and hereby is entered for the Defendants denying the relief requested by the Plaintiff, and the claims of the Plaintiff are hereby dismissed, with prejudice. It is further

ORDERED that each party shall bear its or their own attorney's fees and costs. It is further

ORDERED that the Clerk record this Final Judgment Order forthwith in the land records of the Circuit Court of the County of James City with **SETTLERS MILL ASSOCIATION**, Lawrence E. **LUCK** and Tracy M. **LUCK** to be indexed as Grantors and Lawrence E. **LUCK** and Tracy M. **LUCK** to be indexed as Grantees.

The Clerk is directed to send attested copies hereof to counsel of record.

ENTER / , October 6, 2009

Martin J. Fox
Judge

I ask for this:

Lawrence E. Luck
VSB No. 26404
TRACY MCMURTRIE LUCK & ASSOCIATES
3917 Midlands Rd., Bldg. Two, Ste. 100
Williamsburg, Virginia 23188
(757) 221-0284
(757) 229-4670 (facsimile)
Counsel for Defendants

Seen and objected to: FOR THE REASONS STATED BELOW AND THE REASONS SET OUT IN PLAINTIFF'S OPENING BRIEF AND PLAINTIFF'S REBUTTAL BRIEF PREVIOUSLY FILED HEREIN.

Sheldon M. Franck, Esquire
GEDDY, HARRIS, FRANCK & HICKMAN, L.L.P.
1177 Jamestown Rd.
Williamsburg, Virginia
(757) 220-6500
Counsel for Plaintiff

THE PLAINTIFF EXCEPTS TO ANY FINDINGS BY THE COURT THAT THE ORIGINAL DECLARATION, AS AMENDED BY THE FIRST AMENDMENT, SECOND AMENDMENT AND CORRECTION OF CLERICAL ERROR, CONTAINS ANY AMBIGUITY WHICH WOULD IMPAIR ITS ENFORCEMENT.

Printed On 10/24/2013 By JCC STORM WATER

File MC007, MC016, MC029, MC030

000009283

THIS DEED OF GIFT IS EXEMPT FROM RECORDATION TAXES UNDER THE CODE OF VIRGINIA SECTION 58.1-811 (D).

DEED OF GIFT AND DEDICATION

THIS DEED OF GIFT AND DEDICATION, MADE the 4th day of May, in the year 2000, between

SETTLERS MILL, INCORPORATED, a Virginia corporation, Grantor, and **SETTLERS MILL ASSOCIATION, a Virginia corporation,** Grantee.

WITNESSETH:

That in accordance with the Declaration of Covenants and Restrictions recorded in James City County Deed Book 536 Page 558, as amended the said Grantor does grant and convey, with **SPECIAL WARRANTY OF TITLE** unto the said Grantee the following described property, to-wit:

PARCEL 1: RECREATION LOT

All that certain lot, piece or parcel of land situate, lying and being in James City County, Virginia, known and designated as "Recreation Lot 109,925 S.F. ± 2.524 AC ±" as shown on that certain plat entitled, "PLAT SHOWING RECREATION LOT SETTLERS MILL OWNER/DEVELOPER: SETTLERS MILL, INC. JAMES CITY COUNTY, VIRGINIA" dated January 14, 1991 and made by AES Consulting Engineers and duly recorded in the Clerk's Office of the Circuit Court for the City of Williamsburg and County of James City, Virginia in Plat Book 59 Page 41.

MAY 15 00 0045

This document prepared by
Geddy, Harris, Franck & Hickman, L L P

Printed On 10/24/2013 By JCC STORM WATER

PARCEL 2: COMMON AREA, SECTION 2A

All that certain lot, piece or parcel of land situate, lying and being in James City County, Virginia, known and designated as "Common Area 46.683 S.F. 1.0717 AC ±" as shown on that certain plat entitled "PLAT OF SUBDIVISION SETTLERS MILL AT JAMESTOWN SECTION 2A OWNER: SETTLERS MILL INC. JAMESTOWN DISTRICT JAMES CITY COUNTY VIRGINIA" dated June 1991, made by AES Consulting Engineers and duly recorded in the Clerk's Office of the Circuit Court for the City of Williamsburg and County of James City, Virginia in Plat Book 55 Page 42.

PARCEL 3: COMMON AREA, SECTION 3B

All those certain lots, pieces or parcels of land situate, lying and being in James City County, Virginia known and designated as "Common Area" as shown on that certain plat entitled "PLAT OF SUBDIVISION SETTLERS MILL AT JAMESTOWN SECTION 3B FOR SETTLERS MILL, INC. JAMES CITY COUNTY, JAMESTOWN DISTRICT, VIRGINIA" dated November 10, 1994, made by Langley and McDonald, P.C. and recorded in the Clerk's Office of the Circuit Court for the City of Williamsburg and County of James City, Virginia in Plat Book 60 Pages 77 and 78.

MAY 15 8 0046

PARCEL 4: COMMON AND CONSERVATION AREA, SECTION 4

All those certain lots, pieces or parcels of land situate, lying and being in James City County, Virginia known and designated as "Common and Conservation Area 12,038.9 S.F. 0.2764 AC", "Common and Conservation Area 37,641 S.F. 0.8641 AC" and "Conservation and Common Area 12,328.6 S.F. 0.2830 AC" as shown on that certain plat entitled "PLAT OF SETTLERS MILL AT JAMESTOWN SECTION 4 FOR SETTLERS MILL, INC. JAMESTOWN DISTRICT JAMES CITY COUNTY, VIRGINIA" dated August 22, 1995, made by Langley and McDonald, P.C. and recorded in the Clerk's Office of the Circuit Court for the City of Williamsburg and County of James City, Virginia in Plat Book 63 Pages 18 - 20.

Printed On 10/24/2013 By JCC STORM WATER

PARCEL 5: COMMON AND CONSERVATION AREA, SECTION 5

All those certain lots, pieces or parcels of land, situate, lying and being in James City County, Virginia known and designated as "Common and Conservation Area 29,489 SQ. FT. 0.6770 Acres", "Conservation and Common Area 23,104 SQ FT. 0.5304 Acres", "Common Area and Conservation Area 27,116 SQ. FT. 0.6225 AC." and "Common and Conservation Area 29,860 SQ. FT. 0.6855 AC", as shown on that certain plat entitled "PLAT OF SETTLERS MILL AT JAMESTOWN SECTION 5 FOR SETTLERS MILL, INC. BERKELEY DISTRICT JAMES CITY COUNTY, VIRGINIA" dated April 30, 1997, made by Langley and McDonald, P.C. and recorded in the Clerk's Office of the Circuit Court for the City of Williamsburg and County of James City, Virginia in Plat Book 66 Pages 97-100.

PARCEL 6: COMMON AND CONSERVATION AREA, SECTION 6

All that certain lot, piece or parcel of land, situate, lying and being in James City County, Virginia known and designated as "Common Area & Conservation Easement" as shown on that certain plat entitled "PLAT OF SETTLERS MILL AT JAMESTOWN SECTION 6 FOR SETTLERS MILL, INC. JAMESTOWN DISTRICT JAMES CITY COUNTY VIRGINIA" dated December 7, 1998, made by Langley and McDonald, P.C. and recorded in the Clerk's Office of the Circuit Court for the City of Williamsburg and County of James City, Virginia in Plat Book 73 Pages 13-15.

Together with all and singular the buildings and improvements thereon, the tenements, hereditaments and appurtenances thereunto belonging or in anywise appertaining.

Subject, however, to all easements, conditions, and restrictions of record affecting said property.

Being a portion of the same property as that conveyed to the Grantor by deed dated July 5, 1990 and recorded July 31, 1990 in the aforesaid Clerk's Office in Deed Book 483, page 448.

This conveyance is made subject to all easements, restrictions and limitations of record or apparent on the ground.

MAY 15 8 0047

Whenever used herein the masculine gender shall include the feminine and neuter and the neuter gender shall include the masculine and the feminine and the singular form shall include the plural.

WITNESS the following signatures and seals:

Settlers Mill, Incorporated

By: _____(SEAL)
Larry R. McCardle, President

MAY 15 8 00 0048

STATE OF VIRGINIA

CITY OF WILLIAMSBURG

The foregoing instrument was acknowledged before me this 10th day of May, 2000 by Larry R. McCardle, President, Settlers Mill, Inc.

Marcia W. Moore
NOTARY PUBLIC

My commission expires: 10-31-2000

Grantee's Address: 1111 Old Colony Lane
Williamsburg, VA 23185

Prepared by
Geddy, Harris, Franck & Hickman, L.L.P.

VIRGINIA: City of Williamsburg and County of James City, to-wit:
This Deed of Gift was presented with certificate annexed and admitted to record on May 15, 2000, at 10:46 AM/PM in the Clerk's Office of the Circuit Court of the City of Williamsburg and County of James City.
TESTE: BETSY B. WOOLRIDGE, CLERK
BY: Betsy B. Woolridge, Clerk

4-4

Printed On 10/24/2013 By JCC STORM WATER

File in MC016

970 008877

DEED OF EASEMENT

THIS DEED OF EASEMENT is made this 4th day of June, 1997, by and between **SETTLERS MILL INCORPORATED**, a Virginia Corporation, hereinafter referred to as Grantor and **SETTLERS MILL ASSOCIATION**, a Virginia Corporation, whose address is 1111 Old Colony Lane, Williamsburg, Va. 23185, hereinafter referred to as Grantee.

WITNESSETH: For and in consideration of the sum of One and No/100 Dollar ($1.00) cash in hand paid, the receipt of which is hereby acknowledged, Settlers Mill Incorporated does hereby grant, bargain and convey unto Settlers Mill Association an easement for the installation and maintenance of a concrete culvert pipe and concrete ditch on the locations shown and designated as "15" R.C.P." and "3' Conc Ditch" on the plat attached hereto "PLOT PLAN, LOT 24, SECTION 4, SETTLERS MILL, PREPARED FOR MICKEY SIMPSON BUILDER, INC., JAMESTOWN DISTRICT, JAMES CITY COUNTY, VIRGINIA" dated May 30, 1997 and prepared by AES Consulting Engineers of Williamsburg, Virginia. This easement is for the purpose of collection and channeling the surface water runoff. It may be assigned by Settlers Mill Association to any public body, including, but not limited to James City County, Virginia

WITNESS the following signature and seal:

SETTLERS MILL, INCORPORATED

By _____

JUN-6 97 0052

This document prepared by
Anderson, Franck & Davis, P C
1200 Old Colony Lane
Williamsburg, Virginia 23185
(757) 229 7322

D:\WPWIN\WPDOCS\TEMP\SETTLERS ESM

GENERAL NOTES:

1. BOUNDARY, EASEMENTS AND SETBACK INFORMATION AS SHOWN WAS TAKEN FROM RECORD PLAT. TOPOGRAPHY TAKEN FROM COUNTY TOPOGRAPHIC MAPS.
2. HOUSE DIMENSIONS BASED ON INFORMATION AS SUPPLIED BY OWNER OR CONTRACTOR. CONTRACTOR TO VERIFY ALL DIMENSIONS, ALIGNMENTS AND PROVISIONS.
3. ALL TREES MAY BE REMOVED WITHIN THE CLEARING LIMITS SHOWN HEREON.
4. SILT FENCE TO BE PROVIDED ON DOWNSLOPE OF ALL DISTURBED AREAS.
5. CONTRACTOR TO PROVIDE STANDARD V.D.O.T. COARSE AGGREGATE #1 STONE CONSTRUCTION ENTRANCE. UNLESS OTHERWISE NOTED, CONTRACTOR TO PROVIDE A MINIMUM OF 24' OF 15" R.C.P. ENTRANCE CULVERT.

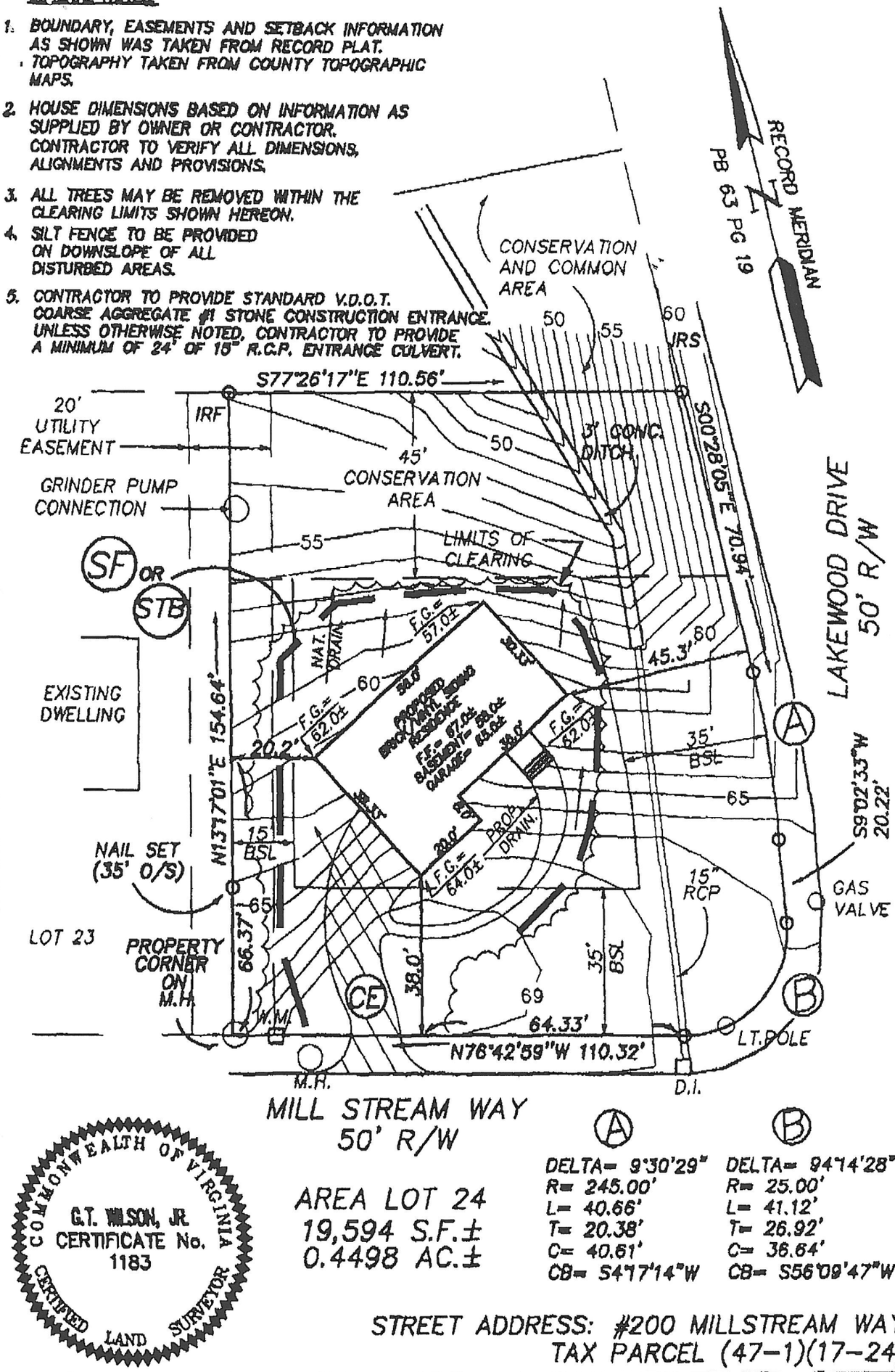

(A)	(B)
DELTA= 9°30'29"	DELTA= 94°14'28"
R= 245.00'	R= 25.00'
L= 40.66'	L= 41.12'
T= 20.38'	T= 26.92'
C= 40.61'	C= 36.64'
CB= S4°17'14"W	CB= S56°09'47"W

COMMONWEALTH OF VIRGINIA
G.T. WILSON, JR.
CERTIFICATE No. 1183
CERTIFIED LAND SURVEYOR

AREA LOT 24
19,594 S.F.±
0.4498 AC.±

STREET ADDRESS: #200 MILLSTREAM WAY
TAX PARCEL (47-1)(17-24)

AES Consulting Engineers
Engineers, Surveyors, Planners
5248 Olde Towne Road, Suite 1
Williamsburg, Virginia 23188
Ph. (757)-253-0040, Fax (757)-220-8994

PLOT PLAN
LOT 24 SECTION 4 SETTLERS MILL
PREPARED FOR MICKEY SIMPSON BUILDER, INC.

JAMESTOWN DISTRICT | JAMES CITY COUNTY | VIRGINIA

Scale: 1"= 30'	Ref: PB 63 PG 19	Date: 5/30/97	Job No: 23553

JUN-66 0051

Printed On 10/24/2013 By JCC STORM WATER

STATE OF VIRGINIA

COUNTY OF JAMES CITY, to-wit:

The foregoing instrument was acknowledged before me by LARRY McCARDLE PRESIDENT of Settlers Mill, Incorporation, a Virginia Corporation, this 5TH day of JUNE, 1997

NOTARY PUBLIC

My commission expires. 11·30·99

VIRGINIA: City of Williamsburg and County of James City to Wit:
In the Clerk's Office of the Circuit Court of the City of Williamsburg and County of James City the 6 day of June, 1997. This Deed of Easement was presented with certificate annexed and admitted to record at 11:06 o'clock
Teste. Helena S. Ward, Clerk
by Deputy Clerk

FLAT ATTACHED

JUN-6 97 0053

This document prepared by
Anderson, Franck & Davis, P C
1200 Old Colony Lane
Williamsburg, Virginia 23185
(757) 229 7322

D:\WPWIN\WPDOCS\TEMP\SETTLERS ESM

VDOT ACCEPTS NO MAINTENANCE RESPONSIBILITY FOR THE RETENTION/DETENTION PONDS AND IS SAVED HARMLESS FROM ANY DAMAGE CAUSED BY FAILURE OF THE BASINS AND THEIR OUTFALL STRUCTURES.

COMMONWEALTH OF VIRGINIA
JOHN L. HUTCHERSON
No 7753
RETIRED PROFESSIONAL ENGINEER

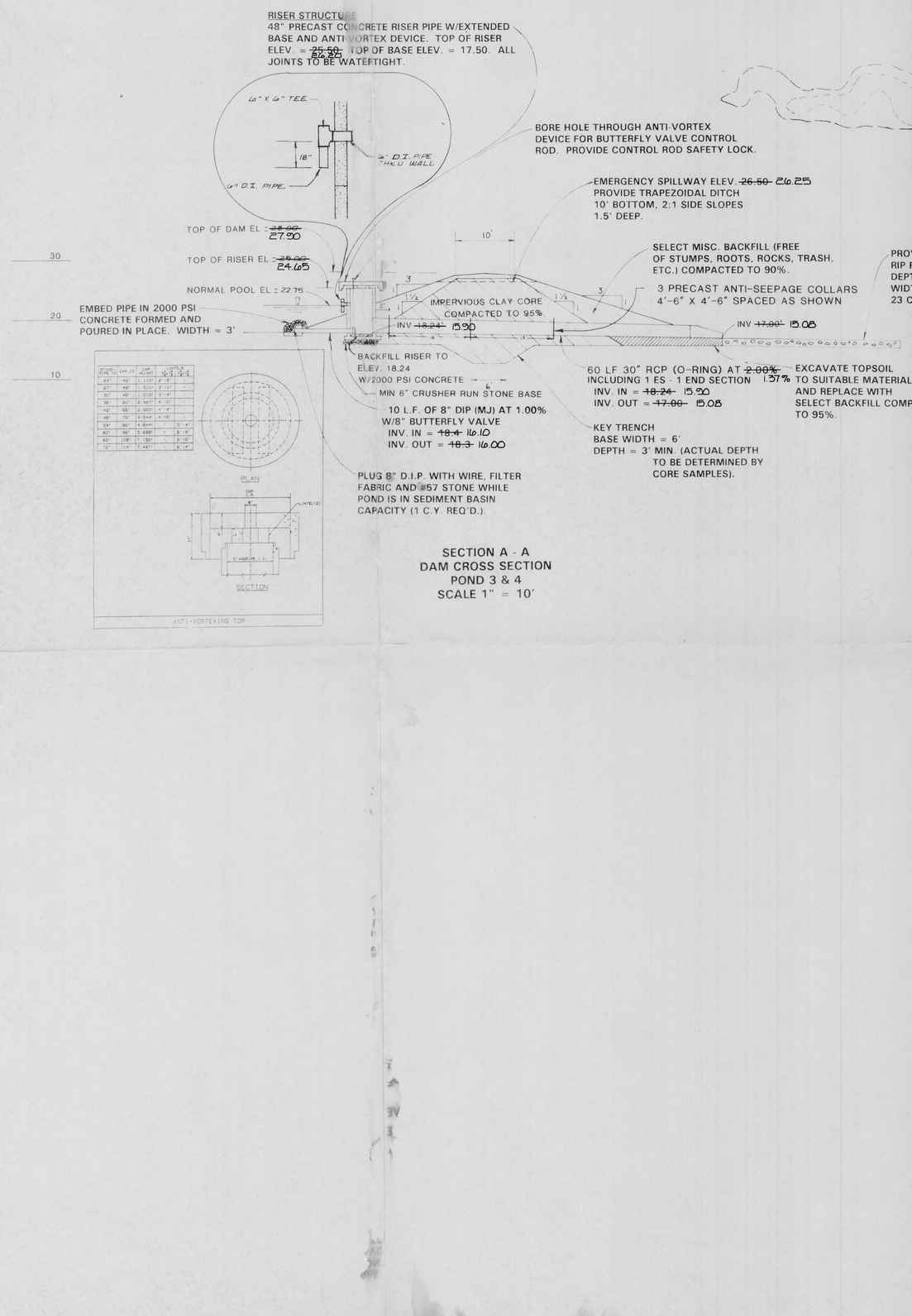

NOTE:

1. FIELD SURVEY OF RECORD DRAWING CONDITIONS PERFORMED 1/13/98, BY LANGLEY & MCDONALD, P.C.
2. VERTICAL DATUM TIED TO SITE DATUM. REFERENCE TBM NAIL IN PINE AT INTERSECTION OF LAKEWOOD AND SPRINGBRANCH. ELEVATION 64.42

SEC 3

RECORD DRAWING 1/14/98

REVISED: 12/14/93 REVISED: 9/16/93 PER COUNTY COMMENTS

Langley and McDonald
A PROFESSIONAL CORPORATION
ENGINEERS • PLANNERS • SURVEYORS
VIRGINIA BEACH - WILLIAMSBURG, VIRGINIA

DES	JLH
DWN	LLW
CHK	JLH
DATE	6/30/93

SETTLERS MILL
AT JAMESTOWN
SECTION 3.
OWNER/DEVELOPER: SETTLERS MILL INC.
JAMES CITY COUNTY, VIRGINIA
JAMESTOWN DISTRICT

PROJ NO	93047-14
SCALE	1"=50'
SHEET	1 OF 1
DWG	6888W

MC016_COMMON_AREA_SETTLERS_MILL_SEC_3 - 006

MC016

DRAINAGE,

STORMWATER MANAGEMENT,

AND EROSION CONTROL DESIGN CALCULATIONS

FOR

SETTLERS MILL

AT JAMESTOWN

SECTION 3

SEC 3

June 29,1993

Revised August 20, 1993

MC 016

Langley and McDonald, P.C.

Engineers
Surveyors
Planners
Landscape Architects
Environmental Consultants

5544 Greenwich Road, Virginia Beach, VA 23462
(804) 473-2000 FAX: (804) 497-7933

201 Packets Court, Williamsburg, VA 23185
(804) 253-2975 FAX: (804) 229-0049

DRAINAGE,

STORMWATER MANAGEMENT,

AND EROSION CONTROL DESIGN CALCULATIONS

FOR

SETTLERS MILL

AT JAMESTOWN

SECTION 3

COMMONWEALTH OF VIRGINIA
JOHN L. HUTCHERSON
No.
7753
CERTIFIED PROFESSIONAL ENGINEER

June 29,1993

Revised August 20, 1993

DRAINAGE, STORMWATER MANAGEMENT, AND EROSION CONTROL DESIGN

The Drainage, Stormwater Management, and Erosion Control facilities for Section 3 of Settlers Mill have been developed in basic conformance with the "Overall Drainage and Stormwater Management Plan" developed by AES Consulting Engineers of Williamsburg, Virginia as shown on their plans of Section 2 of Settlers Mill. We have, however, combined Pond #3 and Pond #4 shown on Sheet 2 of the AES plans, dated 2/91. Both Pond #3 and Pond #4 are wet ponds and are called for to be 9 point BMP's. We have designed the combined pond as a 9 point BMP using 4 times the volume required by the Chesapeake Bay Preservation Act. The design volume required is as follows:

Required Volume of BMP 3 & 4 Combined

$$V_r = \frac{(R_m)(R_v)}{12} \times Ac.$$

$R_v = (0.05 + 0.009I) = [0.05 + 0.009(22.6)] = 0.253$
(Where I = 22.6% from CBLAM Sheet C-10, attached)

$R_m = 0.45"$

Ac. = 48 Acres

$$V_r = \frac{(0.45)(0.253)}{12} \times 48 = 0.455 \text{ ac.-ft.} = 19{,}820 \text{ cu. ft.}$$

A 9 Point BMP wet pond requires 4 x V_r normal storage.

$V_r \times 4 = 0.456$ ac.-ft. x 4 = 1.82 ac.-ft. = 79,280 cu. ft.

The BMP pond was designed using the Modified Rational Method and run on Haestad Methods Inc.'s Quick TR-55 and Pond-2 software. Intensity, Duration, and Frequency Curve data used was taken from the VDOT Drainage Manual for Norfolk (Rev. 6/92).

The BMP pond will be used as a sediment basin during construction. The total contributing acreage to BMP 3 & 4 combined is 48 acres. Thus, the required sediment trap volume is 3.98 Ac.-ft. For the 25-year storm frequency, the pond provides 1.96 ac.-ft. of wet storage volume and 3.23 ac. ft. of dry storage volume for a total storage volume of 5.19 ac.-ft.

ANNUAL STORM PHOSPHOROUS EXPORT — *TABLE 1*

For Existing Urban Land Uses
(in pounds/acre/year)

LAND USES	IMPERVIOUS COVER (%)	ANNUAL RAINFALL (in) 40	41	42	43	44	45
	0	0.11	0.11	0.11	0.11	0.12	0.12
5.0 acre residential lots	5	0.20	0.21	0.21	0.22	0.22	0.23
2.0 acre residential lots	10	0.30	0.30	0.31	0.32	0.33	0.33
1.0 acre residential lots	15	0.39	0.40	0.41	0.42	0.43	0.44
	16	0.41	0.42	0.43	0.44	0.45	0.46
	17	0.43	0.44	0.45	0.46	0.47	0.48
	18	0.45	0.46	0.47	0.48	0.49	0.51
	19	0.47	0.48	0.49	0.50	0.52	0.53
0.50 acre residential lots	20 ← 22.6	2.03	2.08	2.13	2.18	2.23	2.28
0.41 → 0.33 acre residential lots	25	2.42	2.48	2.54	2.61	2.67	2.72
0.25 acre residential lots	30	2.82	2.89	2.96	3.03	3.10	3.17
	35	3.22	3.30	3.38	3.46	3.54	3.62
Townhouses	40	3.61	3.70	3.79	3.88	3.97	4.06
	45	4.01	4.11	4.21	4.31	4.41	4.51
	50	4.41	4.52	4.63	4.74	4.85	4.96
Garden Apartments	55	4.80	4.92	5.04	5.16	5.28	5.40
	60	5.20	5.33	5.46	5.59	5.72	5.85
	65	5.60	5.74	5.88	6.02	6.16	6.30
Light	70	5.99	6.14	6.29	6.44	6.59	6.74
Commercial/Industrial	75	6.39	6.55	6.71	6.87	7.03	7.19
	80	6.79	6.96	7.13	7.29	7.46	7.63
Heavy	85	7.98	8.17	8.37	8.57	8.77	8.97
Commercial/Industrial	90	7.58	7.77	7.96	8.15	8.34	8.53
	95	7.98	8.17	8.37	8.57	8.77	8.97
Asphalt/Pavement	100	8.37	8.58	8.79	9.00	9.21	9.42

For Non-Urban Land Uses
(in pounds/acre/year)

LAND USE	SILT LOAM SOILS	LOAM SOILS	SANDY LOAM SOILS
Conventional Tillage Cropland	3.71	2.42	0.83
Conservation Tillage Cropland	2.32	1.52	0.52
Pasture Land	0.91	0.59	0.20
Forest Land	0.19	0.12	0.04

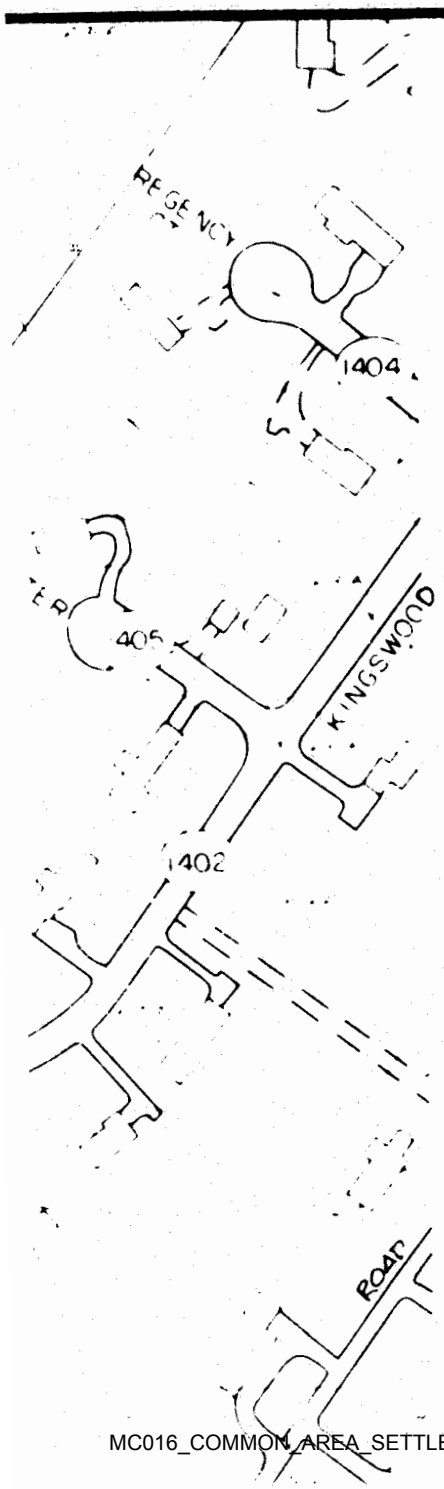

WORKSHEET FOR BMP POINT SYSTEM

A. STRUCTURAL BMP POINT ALLOCATION

BMP (DESIGN TYPE #)	BMP Points		Fraction of Site Served by BMP		Weighted BMP Points
PONDS #1,3,&4 - WET POND (#7)	9	x	51.77%	=	4.66
POND#5 - DRY POND (#4)	9	x	15.90%	=	1.43
POND#2 - WET POND (#6)	8	x	12.92%	=	1.03
		x		=	

TOTAL WEIGHTED STRUCTURAL BMP POINTS: 7.12

B. NATURAL OPEN SPACE CREDIT

Fraction of Site		Natural Open Space Credit		Points for Natural Open Space
35.55%	x	0.1 PER 1% (0.1 per 1%)	=	3.56

C. TOTAL WEIGHTED POINTS

Structural BMP Points	+	Natural Open Space Points	=	TOTAL
7.12	+	3.56	=	10.68

5248 Olde Towne Road, Suite 1
Williamsburg, Virginia 23188
(804) 253-0040
Fax (804) 220-8994
CONSULTING ENGINEERS

LOCATION MAP SCALE: 1" - 2000'

(1) PRE-DEVELOPMENT
TIME = 26 MIN.

POST DEVELOPMENT
TIME = 20 MIN.

(2)

PRE-DEVELOPMENT
Q_{10} ci A
Q (0.25) (3.9) (12.1) = 11.1 cfs
V=4.1 fps

TIME = 5 MIN.

POST DEVELOPMENT
Q = 0.40 (4.2) (12.1) = 20.3 cfs
V=5 fps

TIME = 4 MIN.

(3) PRE-DEVELOPMENT
Q_{10} = ci A
Q_{10} 0.25 (3.5) (23) = 20.7 cfs
V=4.5 fps

TIME = 3 MIN.

POST DEVELOPMENT
Q_{10} = (0.40) (3.8) (23) 35 cfs
V = 5.3 fps

TIME 2.5 MIN.

SUMMARY OF t_c

PRE-DEVELOPMENT t_c =
26+5+3 = 34 MIN.
POST DEVELOPMENT t_c =
20+4+2.5 = 26.5 MIN.

Langley and McDonald, P.C.
Engineers • Surveyors • Planners
Landscape Architects • Environmental Consultants
VIRGINIA BEACH WILLIAMSBURG

DES.	
DWN.	HTB
CHK.	JLH
DATE	8-29-93

OVERALL PLAN OF DEVELOPMENT
SETTLERS MILL
AT JAMESTOWN
SECTION 3
OWNER/DEVELOPER: SETTLERS MILL INC.
JAMESTOWN DISTRICT JAMES CITY COUNTY, VIRGINIA

SHEET 1 OF 1

PROJ. NO. 93047

DWG. 49 W

MC016_COMMON_AREA_SETTLERS_MILL_SEC_3 - 012

FIG. 1.5.1.1

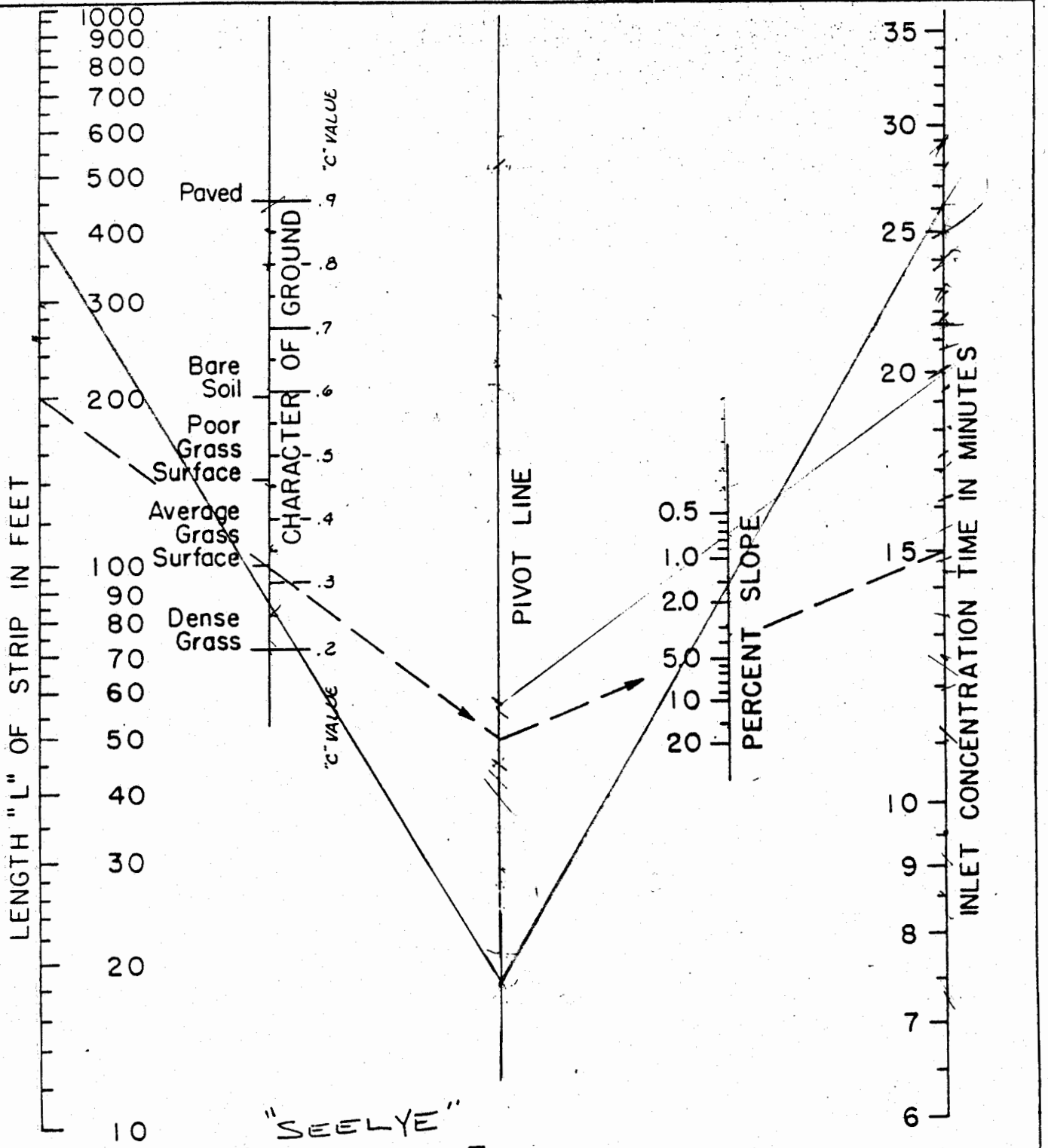

"SEELYE"

[OVERLAND] FLOW TIME

(SHEET)

REPRINTED WITH PERMISSION FROM "DATA BOOK FOR CIVIL ENGINEERS" VOL. I - DESIGN
2ND EDITION (1951) BY E. E. SEELYE

MD-1

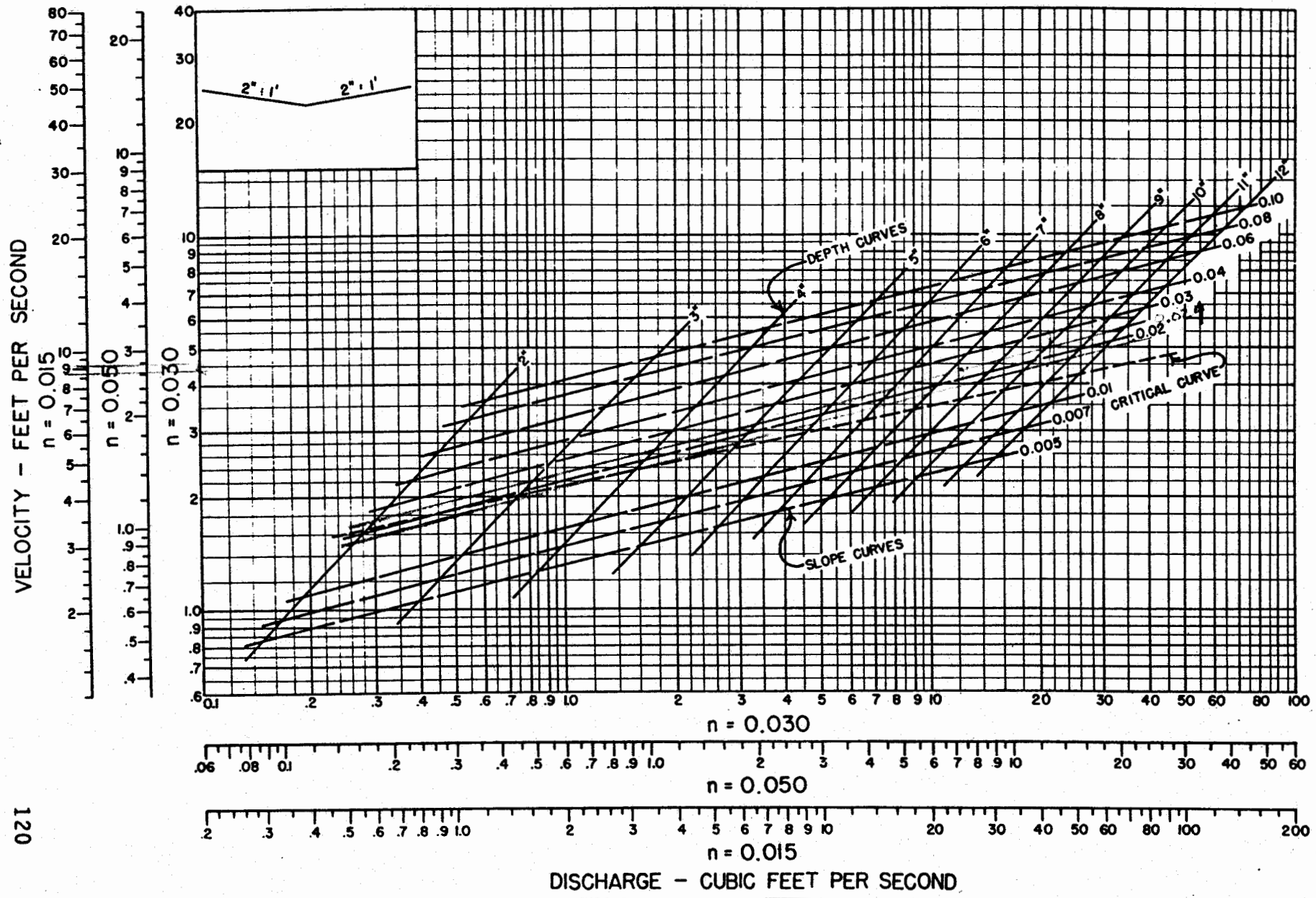

TRIANGULAR MEDIAN DITCH

VIRGINIA DEPARTMENT OF HIGHWAYS
DIVISION OF LOCATION AND DESIGN

NORFOLK, VA.

Fig. 1.5.1.7

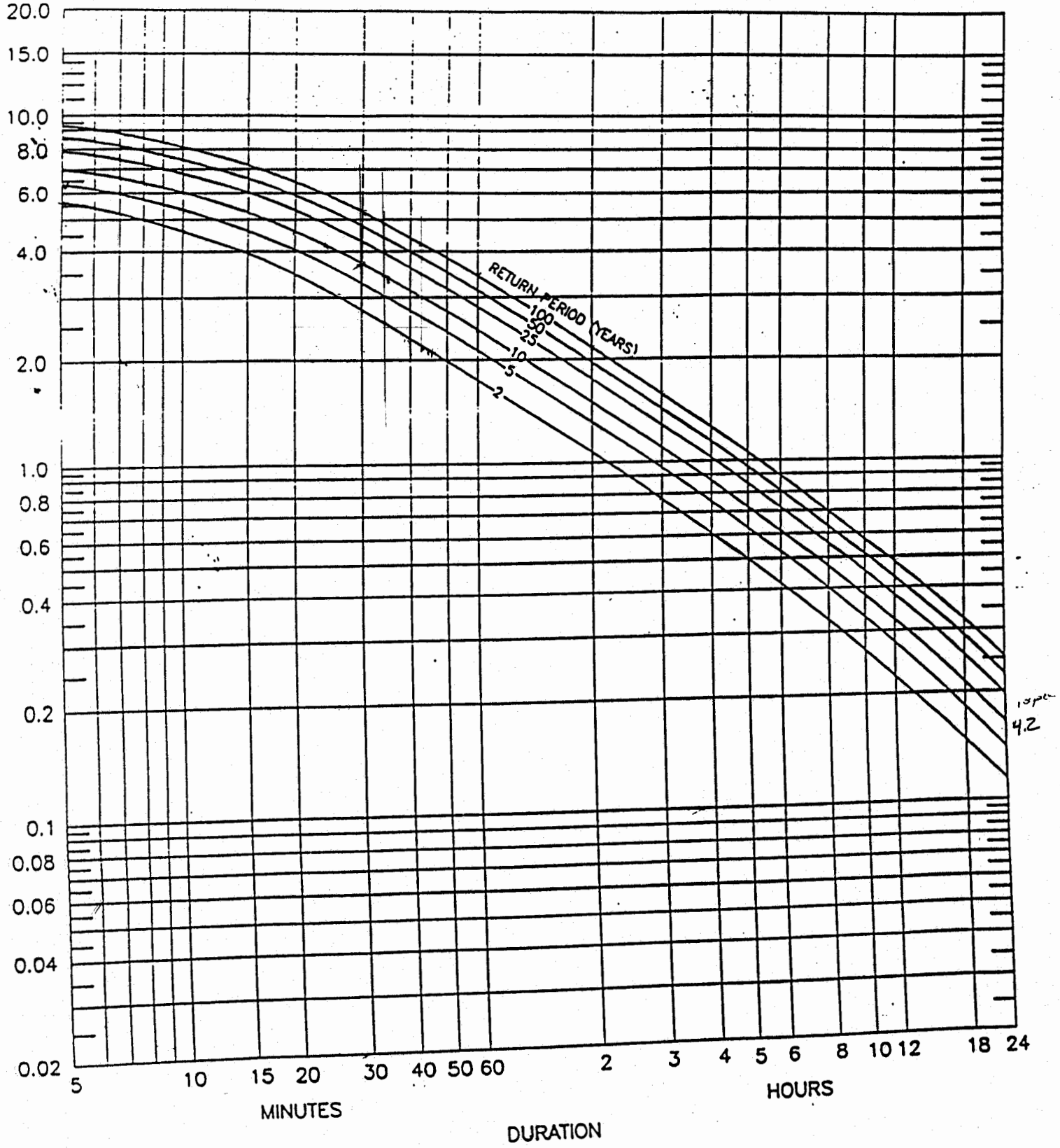

Rev. 6/92

```
MODIFIED RATIONAL METHOD (.MOD)                                  Screen #1
93047    <-This File    Max.Q(cfs)31.2      42.0      48.0      57.6
NORFOLK  <-.IDF File    Freq.(yrs)2         10        25        100
1        <-.HYD Incr.(min) `C'Adj1          1         1.1       1.25
Output hydrographs (HYD Files):*2N         *10N      *25N      *100N     *

Titles:SETTLERS MILL SECTION 3, BMP NOS. 3 & 4

I Method (T,I)      *Graphs     *Qp's      *Grand Summary    *Single Summaries

STORM DATA FOR THIS Tc CONTOUR          Subarea Descr.   Runoff 'C'  Area (acres)
                                                            .4           48
     Tc (minutes): 26.5
     Td (minutes):

 Leave Td field blank to use
 a series of Modified Rational
 hydrographs to compute the
 maximum storage required.

 To compute only peaks, leave
 `Method (T/I)' field blank.

Esc -Exit   <F5> Compute   <F1>-Ins   <Ctrl-X> -Del   PgUp -Prev.  PgDn -Next
```

POND-2 Version: 5.17
S/N: 1295130250

SETTLERS MILL SEC 3

CALCULATED 08-05-1993 05:08:57
DISK FILE: A:93047 .VOL

Planimeter scale: 1 inch = 50 ft.

Elevation (ft)	Planimeter (sq.in.)	Area (sq.ft)	A1+A2+sqr(A1*A2) (sq.ft)	* Volume (cubic-ft)	Volume Sum (cubic-ft)
18.00	2.20	5,500	0	0	0
20.00	7.75	19,375	35,198	23,465	23,465
22.00	9.20	23,000	63,485	42,323	65,789
24.00	15.50	38,750	91,604	61,069	126,858
26.00	23.00	57,500	143,453	95,635	222,493
28.00	31.70	79,250	204,255	136,170	358,663

Elevations With Areas Interpolated From
The Closest Two Planimeter Readings

21.00	-----	21,149	60,766	20,255	43,721
21.50	-----	22,065	62,116	31,058	54,523
22.50	-----	26,555	74,268	12,378	78,167
22.75	-----	28,428.	76,998	19,249	85,038
23.00	-----	30,364	79,791	26,597	92,386
23.50	-----	34,430	85,570	42,785	108,573
24.50	-----	43,092	122,705	20,451	147,309
25.00	-----	47,664	129,391	43,130	169,988
25.25	-----	50,037	132,820	55,342	182,199
25.50	-----	52,467	136,307	68,153	195,011
25.75	-----	54,955	139,851	81,580	208,437

IA = (sq.rt(Area1) + ((Ei-E1)/(E2-E1))*(sq.rt(Area2)-sq.rt(Area1)))^2

where: E1, E2 = Closest two elevations with planimeter data
Ei = Elevation at which to interpolate area
Area1,Area2 = Areas computed for E1, E2, respectively
IA = Interpolated area for Ei

* Incremental volume computed by the Conic Method for Reservoir Volumes.

Volume = (1/3) * (EL2-EL1) * (Area1 + Area2 + sq.rt.(Area1*Area2))

where: EL1, EL2 = Lower and upper elevations of the increment
Area1,Area2 = Areas computed for EL1, EL2, respectively
Volume = Incremental volume between EL1 and EL2

Quick TR-55 Ver.5.46 S/N:1315430271
Executed: 14:39:54 08-04-1993

```
*************************************************************************
*************************************************************************
*                                                                       *
*                                                                       *
*                        MODIFIED RATIONAL METHOD                       *
*            ---- Grand Summary For All Storm Frequencies ----          *
*                                                                       *
*                                                                       *
*************************************************************************
*************************************************************************
```

First peak outflow point assumed to occur at inflow recession leg.

SETTLERS MILL SECTION 3, BMP NOS. 3 & 4

Area = 48.00 acres Tc = 26.50 minutes

Frequency (years)	Adjusted 'C'	Duration minutes	Intens. in/hr	Qpeak cfs	Allowable cfs	VOLUMES Inflow (cu.ft.)	Storage (cu.ft.)
2	0.400	55	1.900	36.48	31.20	120,384	44,100
10	0.400	46	2.910	55.87	42.00	154,207	62,857
25	0.440	50	3.250	68.64	48.00	205,920	95,760
100	0.500	87	2.883	69.18	57.60	361,120	164,992

Outlet Structure File: 93047 .STR

POND-2 Version: 5.17 S/N: 1295130250
Date Executed: Time Executed:

****
SETTLERS MILL SEC 3

****

Outlet Structure File: A:93047 .STR
Planimeter Input File: A:93047 .VOL
Rating Table Output File: A:93047 .PND

Min. Elev.(ft) = 18 Max. Elev.(ft) = 28 Incr.(ft) = .5

Additional elevations (ft) to be included in table:
* *

****
SYSTEM CONNECTIVITY
****

Structure	No.	Q Table		Q Table
ORIFICE-VC	1		->	1
STAND PIPE	2		->	2
WEIR-XY	3		->	3

Outflow rating table summary was stored in file:
A:93047 .PND

Outlet Structure File: 93047 .STR

POND-2 Version: 5.17 S/N: 1295130250
Date Executed: Time Executed:

****
SETTLERS MILL SEC 3

****

***** COMPOSITE OUTFLOW SUMMARY ****

Elevation (ft)	Q (cfs)	Contributing Structures
18.00	0.0	
18.50	0.0	
19.00	0.0	
19.50	0.0	
20.00	0.0	
20.50	0.0	
21.00	0.0	
21.50	0.0	
22.00	0.0	
22.50	0.0	
23.00	0.0	
23.50	0.7	1
24.00	0.9	1
24.50	1.2	1
25.00	1.3	1 +2
25.50	15.3	1 +2
26.00	40.6	1 +2
26.50	73.3	1 +2 +3
27.00	99.3	1 +2 +3
27.50	133.8	1 +2 +3
28.00	178.0	1 +2 +3

Outlet Structure File: 93047 .STR

POND-2 Version: 5.17 S/N: 1295130250
Date Executed: Time Executed:

****
SETTLERS MILL SEC 3

****

>>>>>> Structure No. 1 <<<<<<
(Input Data)

ORIFICE-VC
Orifice - Vertical Circular

E1 elev.(ft)?	23.25
E2 elev.(ft)?	28.001
Orifice coeff.?	.6
Invert elev.(ft)?	22.75
Datum elev.(ft)?	23.00
Diameter (ft)?	.500

Outlet Structure File: 93047 .STR

POND-2 Version: 5.17 S/N: 1295130250
Date Executed: Time Executed:

****
SETTLERS MILL SEC 3

****

>>>>>> Structure No. 2 <<<<<<
(Input Data)

STAND PIPE
Stand Pipe with weir or orifice flow

E1 elev.(ft)? 25
E2 elev.(ft)? 28.001
Crest elev.(ft)? 25.0
Diameter (ft)? 4
Weir coefficient? 3.1
Orifice coefficient? .6
Start transition elev.(ft) @ ?
Transition height (ft)?

Outlet Structure File: 93047 .STR

POND-2 Version: 5.17 S/N: 1295130250
Date Executed: Time Executed:

****
SETTLERS MILL SEC 3

****

>>>>>> Structure No. 3 <<<<<<
(Input Data)

WEIR-XY
Weir - Defined by X, Y Coordinates
E1 (ft) = 26.5 E2 (ft) = 28.001

X dist.(ft)	Y elev.(ft)
0	28
3.5	26.5
13.5	26.5
17	28

Outlet Structure File: 93047 .STR

POND-2 Version: 5.17 S/N: 1295130250
Date Executed: Time Executed:

****
SETTLERS MILL SEC 3

****

Outflow Rating Table for Structure #1
ORIFICE-VC Orifice - Vertical Circular

Elevation (ft)	Q (cfs)	Computation Messages
18.00	0.0	E < E1=23.25
18.50	0.0	E < E1=23.25
19.00	0.0	E < E1=23.25
19.50	0.0	E < E1=23.25
20.00	0.0	E < E1=23.25
20.50	0.0	E < E1=23.25
21.00	0.0	E < E1=23.25
21.50	0.0	E < E1=23.25
22.00	0.0	E < E1=23.25
22.50	0.0	E < E1=23.25
23.00	0.0	E < E1=23.25
23.50	0.7	H =.5
24.00	0.9	H =1.0
24.50	1.2	H =1.5
25.00	1.3	H =2.0
25.50	1.5	H =2.5
26.00	1.6	H =3.0
26.50	1.8	H =3.5
27.00	1.9	H =4.0
27.50	2.0	H =4.5
28.00	2.1	H =5.0

C = .6 A = .1963496 sq.ft.
H (ft) = Table elev. - Datum elev. (23 ft)
Q (cfs) = C * A * sqr(2g * H)

Outlet Structure File: 93047 .STR

POND-2 Version: 5.17 S/N: 1295130250
Date Executed: Time Executed:

****
SETTLERS MILL SEC 3

****

Outflow Rating Table for Structure #2
STAND PIPE Stand Pipe with weir or orifice flow

***** INLET CONTROL ASSUMED *****

Elevation (ft)	Q (cfs)	Computation Messages	
18.00	0.0	E < Inv.El.= 25	
18.50	0.0	E < El= 25	
19.00	0.0	E < El= 25	
19.50	0.0	E < El= 25	
20.00	0.0	E < El= 25	
20.50	0.0	E < El= 25	
21.00	0.0	E < El= 25	
21.50	0.0	E < El= 25	
22.00	0.0	E < El= 25	
22.50	0.0	E < El= 25	
23.00	0.0	E < El= 25	
23.50	0.0	E < El= 25	
24.00	0.0	E < El= 25	
24.50	0.0	E < El= 25	
25.00	0.0	Weir:	H =0.0
25.50	13.8	Weir:	H =.5
26.00	39.0	Weir:	H =1.0
26.50	71.6	Weir:	H =1.5
27.00	85.6	Orifice:	H =2.0
27.50	95.7	Orifice:	H =2.5
28.00	104.8	Orifice:	H =3.0

Weir Cw = 3.1 Weir length = 12.56637 ft
Orifice Co = .6 Orifice area = 12.56637 sq.ft.
Q (cfs) = (Cw * L * H**1.5) or (Co * A * sqr(2*g*H))
No transition used, transition height = 0.0
Weir equation = Orifice equation @ elev.= 26.55322 ft

Outlet Structure File: 93047 .STR

POND-2 Version: 5.17 S/N: 1295130250
Date Executed: Time Executed:

****
SETTLERS MILL SEC 3

****

Outflow Rating Table for Structure #3
WEIR-XY Weir - Defined by X, Y Coordinates

***** INLET CONTROL ASSUMED *****

Elevation (ft)	Q (cfs)	Computation Messages	
18.00	0.0	E < Y min= 26.5	
18.50	0.0	E < Y min= 26.5	
19.00	0.0	E < Y min= 26.5	
19.50	0.0	E < Y min= 26.5	
20.00	0.0	E < Y min= 26.5	
20.50	0.0	E < Y min= 26.5	
21.00	0.0	E < Y min= 26.5	
21.50	0.0	E < Y min= 26.5	
22.00	0.0	E < Y min= 26.5	
22.50	0.0	E < Y min= 26.5	
23.00	0.0	E < Y min= 26.5	
23.50	0.0	E < Y min= 26.5	
24.00	0.0	E < Y min= 26.5	
24.50	0.0	E < Y min= 26.5	
25.00	0.0	E < E1= 26.5	
25.50	0.0	E < E1= 26.5	
26.00	0.0	E < E1= 26.5	
26.50	0.0	E = Y min= 26.5	
27.00	11.9	W(ft)=12.333	Max. D(ft)=.5
27.50	36.1	W(ft)=14.667	Max. D(ft)=1.0
28.00	71.0	W(ft)=17.0	Max. D(ft)=1.5

Quick TR-55 Ver.5.46 S/N:1315430271
Executed: 15:10:12 08-04-1993

>>>>> I-D-F Curve <<<<<

Recurrence Frequency = 2

DURATION minutes	INTENSITY inches/hour
0	0
5	5.7
6	5.5
7	5.25
8	5.0
9	4.75
10	4.6
15	4.0
20	3.5
30	2.75
40	2.25
50	2.0
60	1.8
120	1.15
180	.75
240	.6
300	.5
360	.42
480	.32
600	.27
720	.22
1080	.15
1440	.12

Quick TR-55 Ver.5.46 S/N:1315430271
Executed: 14:39:54 08-04-1993

MODIFIED RATIONAL METHOD
---- Summary for Single Storm Frequency ----

First peak outflow point assumed to occur at inflow recession leg.

SETTLERS MILL SECTION 3, BMP NOS. 3 & 4

RETURN FREQUENCY: 2 yr 'C' Adjustment = 1.000 Allowable Q = 31.20 cfs

Hydrograph file duration= 55.00 minutes
Hydrograph file: 2N .HYD Tc = 26.50 minutes

Weighted 'C'	Adjusted 'C'	Duration minutes	Intens. in/hr	Areas acres	Qpeak cfs	VOLUMES Inflow (cu.ft.)	Storage (cu.ft.)
0.400	0.400	27	3.013	48.00	57.84	91,966	42,358
0.400	0.400	30	2.750	48.00	52.80	95,040	42,156
0.400	0.400	40	2.250	48.00	43.20	103,680	41,436
0.400	0.400	50	2.000	48.00	38.40	115,200	43,596
********** Storage Maximum							
0.400	0.400	55	1.900	48.00	36.48	120,384	44,100
0.400	0.400	60	1.800	48.00	34.56	124,416	43,452
0.400	0.400	120	1.150	48.00	22.08	Qpeak < Qallow	

Quick TR-55 Ver.5.46 S/N:1315430271
Executed: 14:39:54 08-04-1993

SETTLERS MILL SECTION 3, BMP NOS. 3 & 4

* * * * * * SUMMARY OF RATIONAL METHOD PEAK DISCHARGES * * * * * *

Q = adj * C * I * A
Where: Q=cfs, C=Weighted Runoff Coefficient, I=in/hour, A=acres
adj = 'C' adjustment factor for each return frequency

RETURN FREQUENCY = 2 years
'C' adjustment, k = 1
Adj. 'C' = Wtd.'C' x 1

Subarea Descr.	Runoff 'C'	Area acres	Tc (min)	Wtd. 'C'	Adj. 'C'	I in/hr	Total acres	Peak Q (cfs)
	0.400	48.00						
			26.50	0.400	0.400	3.013	48.00	57.84

Quick TR-55 Ver.5.46 S/N:1315430271
Executed: 14:39:54 08-04-1993

SETTLERS MILL SECTION 3, BMP NOS. 3 & 4

**** Modified Rational Hydrograph *****

Weighted C = 0.400 Area= 48.000 acres Tc = 26.50 minutes

Adjusted C = 0.400 Td= 55.00 min. I= 1.90 in/hr Qp= 36.48 cfs

RETURN FREQUENCY: 2 year storm Adj.factor = 1.00
Output file: 2N .HYD

HYDROGRAPH FOR MAXIMUM STORAGE
For the 2 Year Storm

Time increment = 1.00 Minutes
Time on left represents time for first Q in each row.

Time Minutes							
0.50	0.69	2.06	3.44	4.82	6.19	7.57	8.95
7.50	10.32	11.70	13.08	14.45	15.83	17.21	18.58
14.50	19.96	21.34	22.71	24.09	25.47	26.84	28.22
21.50	29.60	30.97	32.35	33.73	35.10	36.48	36.48
28.50	36.48	36.48	36.48	36.48	36.48	36.48	36.48
35.50	36.48	36.48	36.48	36.48	36.48	36.48	36.48
42.50	36.48	36.48	36.48	36.48	36.48	36.48	36.48
49.50	36.48	36.48	36.48	36.48	36.48	36.48	35.79
56.50	34.42	33.04	31.66	30.29	28.91	27.53	26.16
63.50	24.78	23.40	22.03	20.65	19.27	17.90	16.52
70.50	15.14	13.77	12.39	11.01	9.64	8.26	6.88
77.50	5.51	4.13	2.75	1.38	0.00		

Quick TR-55 Ver.5.46 S/N:1315430271
Executed: 14:39:54 08-04-1993

MODIFIED RATIONAL METHOD
---- Graphical Summary for Maximum Required Storage ----

First peak outflow point assumed to occur at inflow recession leg.

SETTLERS MILL SECTION 3, BMP NOS. 3 & 4

```
*********************************************************************
*  RETURN FREQUENCY:   2 yr     |  Allowable Outflow:    31.20 cfs    *
*  'C' Adjustment: 1.000        |  Required Storage:    44,100 cu.ft. *
*-------------------------------------------------------------------*
*  Peak Inflow:   36.48 cfs       Inflow .HYD stored: 2N      .HYD   *
*********************************************************************
```

```
   |                Td =  55 minutes                  |  Return Freq:     2 yr
   /------- Approx. Duration for Max. Storage ------/  C adj.factor: 1.00
   |                                                  |
   |                                                  |
   |                Tc=   26.50  minutes              |
   |                I =   3.013  in/hr                |  Area (ac):    48.00
   |              . Q =   57.84  cfs                  |  Weighted C:    0.40
   |             .|.                                  |  Adjusted C:    0.40
F  |            .   .                                 |
L  |           .  |  .            Required Storage    |
O  |          .       .        .--    44,100 cu.ft.  |  Td=      55 minutes
W  |         .    |    .       |                     |  I =   1.900 in/hr
   |        .     x x x x x x x|x x x x x x x x x x x  Q =   36.48 cfs
c  |       .                   |
f  |      .    x                                      x
s  |     .                                              o   Q=   31.20 cfs
   |    .   x                                o        |x  (Allow.Outflow)
   |   .  x                   .     o                 |
   |  .  x                o    .       NOT TO SCALE    |   x
   | . x       o               .       ============    |
   | o                          .                       |      x
   `-------------------------------------------------|------------
                                                     58.84 minutes
```

EXECUTED: 08-05-1993 05:17:48 Return Freq: 2 years

```
*************************
*                       *
* SETTLERS MILL SEC 3   *
*                       *
*                       *
*                       *
*                       *
*************************
```

Inflow Hydrograph: A:2N .HYD
Rating Table file: A:93047 .PND

----INITIAL CONDITIONS----
Elevation = 22.75 ft
Outflow = 0.00 cfs
Storage = 85,276 cu-ft

GIVEN POND DATA			INTERMEDIATE ROUTING COMPUTATIONS	
ELEVATION (ft)	OUTFLOW (cfs)	STORAGE (cu-ft)	2S/t (cfs)	2S/t + O (cfs)
18.00	0.0	0	0.0	0.0
18.50	0.0	3,397	113.2	113.2
19.00	0.0	8,264	275.4	275.4
19.50	0.0	14,865	495.4	495.4
20.00	0.0	23,465	782.0	782.0
20.50	0.0	33,371	1112.2	1112.2
21.00	0.0	43,721	1457.1	1457.1
21.50	0.0	54,523	1817.1	1817.1
22.00	0.0	65,789	2192.5	2192.5
22.50	0.0	78,167	2605.0	2605.0
23.00	0.0	92,386	3078.9	3078.9
23.50	0.7	108,573	3618.4	3619.1
24.00	0.9	126,858	4227.7	4228.6
24.50	1.2	147,309	4909.3	4910.5
25.00	1.3	169,988	5665.1	5666.4
25.50	15.3	195,011	6499.1	6514.4
26.00	40.6	222,493	7415.0	7455.6
26.50	73.3	252,512	8415.4	8488.7
27.00	99.3	285,140	9502.8	9602.1
27.50	133.8	320,488	10680.8	10814.6
28.00	178.0	358,663	11953.0	12131.0

Time increment (t) = 1.0 min.

Pond File: A:93047 .PND
Inflow Hydrograph: A:2N .HYD
Outflow Hydrograph: A:2OUT .HYD

INFLOW HYDROGRAPH		ROUTING COMPUTATIONS				
TIME (min)	INFLOW (cfs)	I1+I2 (cfs)	2S/t - O (cfs)	2S/t + O (cfs)	OUTFLOW (cfs)	ELEVATION (ft)
0.5	0.69	-----	2842.0	2842.0	0.00	22.75
1.5	2.06	2.8	2844.7	2844.7	0.00	22.75
2.5	3.44	5.5	2850.2	2850.2	0.00	22.76
3.5	4.82	8.3	2858.5	2858.5	0.00	22.77
4.5	6.19	11.0	2869.5	2869.5	0.00	22.78
5.5	7.57	13.8	2883.2	2883.2	0.00	22.79
6.5	8.95	16.5	2899.8	2899.8	0.00	22.81
7.5	10.32	19.3	2919.0	2919.0	0.00	22.83
8.5	11.70	22.0	2941.1	2941.1	0.00	22.85
9.5	13.08	24.8	2965.8	2965.8	0.00	22.88
10.5	14.45	27.5	2993.4	2993.4	0.00	22.91
11.5	15.83	30.3	3023.6	3023.6	0.00	22.94
12.5	17.21	33.0	3056.7	3056.7	0.00	22.98
13.5	18.58	35.8	3092.4	3092.5	0.02	23.01
14.5	19.96	38.5	3130.8	3131.0	0.07	23.05
15.5	21.34	41.3	3171.9	3172.1	0.12	23.09
16.5	22.71	44.1	3215.6	3216.0	0.18	23.13
17.5	24.09	46.8	3261.9	3262.4	0.24	23.17
18.5	25.47	49.6	3310.9	3311.5	0.30	23.22
19.5	26.84	52.3	3362.5	3363.2	0.37	23.26
20.5	28.22	55.1	3416.6	3417.5	0.44	23.31
21.5	29.60	57.8	3473.4	3474.5	0.51	23.37
22.5	30.97	60.6	3532.8	3534.0	0.59	23.42
23.5	32.35	63.3	3594.8	3596.1	0.67	23.48
24.5	33.73	66.1	3659.5	3660.9	0.71	23.53
25.5	35.10	68.8	3726.8	3728.3	0.74	23.59
26.5	36.48	71.6	3796.9	3798.4	0.76	23.65
27.5	36.48	73.0	3868.3	3869.8	0.78	23.71
28.5	36.48	73.0	3939.6	3941.2	0.81	23.76
29.5	36.48	73.0	4010.9	4012.6	0.83	23.82
30.5	36.48	73.0	4082.2	4083.9	0.85	23.88
31.5	36.48	73.0	4153.4	4155.1	0.88	23.94
32.5	36.48	73.0	4224.5	4226.3	0.90	24.00
33.5	36.48	73.0	4295.6	4297.5	0.93	24.05
34.5	36.48	73.0	4366.7	4368.6	0.96	24.10
35.5	36.48	73.0	4437.7	4439.6	0.99	24.15
36.5	36.48	73.0	4508.6	4510.6	1.02	24.21
37.5	36.48	73.0	4579.4	4581.5	1.06	24.26
38.5	36.48	73.0	4650.2	4652.4	1.09	24.31
39.5	36.48	73.0	4720.9	4723.2	1.12	24.36
40.5	36.48	73.0	4791.6	4793.9	1.15	24.41
41.5	36.48	73.0	4862.2	4864.6	1.18	24.47
42.5	36.48	73.0	4932.7	4935.2	1.20	24.52
43.5	36.48	73.0	5003.3	5005.7	1.21	24.56
44.5	36.48	73.0	5073.8	5076.2	1.22	24.61

EXECUTED: 08-05-1993 05:17:48 Return Freq: 2 years

Pond File: A:93047 .PND
Inflow Hydrograph: A:2N .HYD
Outflow Hydrograph: A:2OUT .HYD

INFLOW HYDROGRAPH		ROUTING COMPUTATIONS				
TIME (min)	INFLOW (cfs)	I1+I2 (cfs)	2S/t - O (cfs)	2S/t + O (cfs)	OUTFLOW (cfs)	ELEVATION (ft)
45.5	36.48	73.0	5144.3	5146.8	1.23	24.66
46.5	36.48	73.0	5214.8	5217.3	1.24	24.70
47.5	36.48	73.0	5285.2	5287.7	1.25	24.75
48.5	36.48	73.0	5355.7	5358.2	1.26	24.80
49.5	36.48	73.0	5426.1	5428.6	1.27	24.84
50.5	36.48	73.0	5496.5	5499.1	1.28	24.89
51.5	36.48	73.0	5566.9	5569.5	1.29	24.94
52.5	36.48	73.0	5637.3	5639.8	1.30	24.98
53.5	36.48	73.0	5706.2	5710.2	2.02	25.03
54.5	36.48	73.0	5772.8	5779.1	3.16	25.07
55.5	35.79	72.3	5836.6	5845.1	4.25	25.11
56.5	34.42	70.2	5896.3	5906.8	5.27	25.14
57.5	33.04	67.5	5951.3	5963.7	6.21	25.18
58.5	31.66	64.7	6001.9	6016.0	7.07	25.21
59.5	30.29	62.0	6048.1	6063.8	7.86	25.23
60.5	28.91	59.2	6090.1	6107.3	8.58	25.26
61.5	27.53	56.4	6128.1	6146.6	9.23	25.28
62.5	26.16	53.7	6162.2	6181.8	9.81	25.30
63.5	24.78	50.9	6192.5	6213.1	10.33	25.32
64.5	23.40	48.2	6219.1	6240.6	10.78	25.34
65.5	22.03	45.4	6242.2	6264.5	11.17	25.35
66.5	20.65	42.7	6261.8	6284.8	11.51	25.36
67.5	19.27	39.9	6278.2	6301.7	11.79	25.37
68.5	17.90	37.2	6291.3	6315.3	12.01	25.38
69.5	16.52	34.4	6301.4	6325.7	12.19	25.39
70.5	15.14	31.7	6308.4	6333.0	12.31	25.39
71.5	13.77	28.9	6312.6	6337.3	12.38	25.40
72.5	12.39	26.2	6313.9	6338.7	12.40	25.40
73.5	11.01	23.4	6312.6	6337.3	12.38	25.40
74.5	9.64	20.7	6308.6	6333.2	12.31	25.39
75.5	8.26	17.9	6302.1	6326.5	12.20	25.39
76.5	6.88	15.1	6293.2	6317.2	12.05	25.38
77.5	5.51	12.4	6281.8	6305.5	11.85	25.38
78.5	4.13	9.6	6268.2	6291.5	11.62	25.37
79.5	2.75	6.9	6252.4	6275.1	11.35	25.36
80.5	1.38	4.1	6234.5	6256.6	11.04	25.35
81.5	0.00	1.4	6214.4	6235.8	10.70	25.34

STORM	Q_{PRE}	Q_{POST}	Q_{OUT}	ELEV	STOR
2 – 24	18.0	35.1	10.7	25.35	2.4
10-24	45	69	39.2	26.45	3.9
~~100-24~~	~~94.3~~	~~125~~	~~110.~~	~~27.35~~	
100-24	94.3	125	109	27.05	5.0

********** SUMMARY OF ROUTING COMPUTATIONS **********

Pond File: A:93047 .PND
Inflow Hydrograph: A:2N .HYD
Outflow Hydrograph: A:2OUT .HYD

Starting Pond W.S. Elevation = 22.75 ft

***** Summary of Peak Outflow and Peak Elevation *****

Peak Inflow = 36.48 cfs
Peak Outflow = 12.40 cfs
Peak Elevation = 25.40 ft

***** Summary of Approximate Peak Storage *****

Initial Storage = 85,276 cu-ft
Peak Storage From Storm = 104,552 cu-ft

Total Storage in Pond = 189,828 cu-ft

Warning: Inflow hydrograph truncated on left side.

Quick TR-55 Ver.5.46 S/N:1315430271
Executed: 15:10:12 08-04-1993

>>>>> I-D-F Curve <<<<<

Recurrence Frequency = 10

DURATION minutes	INTENSITY inches/hour
0	0
5	7.0
6	6.75
7	6.5
8	6.45
9	6.25
10	6.0
15	5.25
20	4.7
30	3.75
40	3.15
50	2.75
60	2.45
120	1.6
180	1.15
240	.87
300	.72
360	.62
480	.47
600	.38
720	.32
1080	.21
1440	.17

Quick TR-55 Ver.5.46 S/N:1315430271
Executed: 14:39:54 08-04-1993

MODIFIED RATIONAL METHOD
---- Summary for Single Storm Frequency ----

First peak outflow point assumed to occur at inflow recession leg.

SETTLERS MILL SECTION 3, BMP NOS. 3 & 4

RETURN FREQUENCY: 10 yr 'C' Adjustment = 1.000 Allowable Q = 42.00 cfs

Hydrograph file duration= 46.00 minutes
Hydrograph file: 10N .HYD Tc = 26.50 minutes

Weighted 'C'	Adjusted 'C'	Duration minutes	Intens. in/hr	Areas acres	Qpeak cfs	VOLUMES Inflow (cu.ft.)	Storage (cu.ft.)
0.400	0.400	27	4.082	48.00	78.38	124,631	57,851
0.400	0.400	30	3.750	48.00	72.00	129,600	58,410
0.400	0.400	40	3.150	48.00	60.48	145,152	61,362
********** Storage Maximum							
0.400	0.400	46	2.910	48.00	55.87	154,207	62,857
0.400	0.400	50	2.750	48.00	52.80	158,400	62,010
0.400	0.400	60	2.450	48.00	47.04	169,344	60,354
0.400	0.400	120	1.600	48.00	30.72	Qpeak < Qallow	

Quick TR-55 Ver.5.46 S/N:1315430271
Executed: 14:39:54 08-04-1993

SETTLERS MILL SECTION 3, BMP NOS. 3 & 4

* * * * * * SUMMARY OF RATIONAL METHOD PEAK DISCHARGES * * * * * *

Q = adj * C * I * A
Where: Q=cfs, C=Weighted Runoff Coefficient, I=in/hour, A=acres
adj = 'C' adjustment factor for each return frequency

RETURN FREQUENCY = 10 years
'C' adjustment, k = 1
Adj. 'C' = Wtd.'C' x 1

Subarea Descr.	Runoff 'C'	Area acres	Tc (min)	Wtd. 'C'	Adj. 'C'	I in/hr	Total acres	Peak Q (cfs)
	0.400	48.00						
			26.50	0.400	0.400	4.082	48.00	78.38

Quick TR-55 Ver.5.46 S/N:1315430271
Executed: 14:39:54 08-04-1993

SETTLERS MILL SECTION 3, BMP NOS. 3 & 4

**** Modified Rational Hydrograph *****

Weighted C = 0.400 Area= 48.000 acres Tc = 26.50 minutes

Adjusted C = 0.400 Td= 46.00 min. I= 2.91 in/hr Qp= 55.87 cfs

RETURN FREQUENCY: 10 year storm Adj.factor = 1.00
Output file: 10N .HYD

HYDROGRAPH FOR MAXIMUM STORAGE
For the 10 Year Storm

Time increment = 1.00 Minutes
Time on left represents time for first Q in each row.

Time Minutes							
0.50	1.05	3.16	5.27	7.38	9.49	11.60	13.70
7.50	15.81	17.92	20.03	22.14	24.25	26.35	28.46
14.50	30.57	32.68	34.79	36.90	39.00	41.11	43.22
21.50	45.33	47.44	49.55	51.66	53.76	55.87	55.87
28.50	55.87	55.87	55.87	55.87	55.87	55.87	55.87
35.50	55.87	55.87	55.87	55.87	55.87	55.87	55.87
42.50	55.87	55.87	55.87	55.87	54.82	52.71	50.60
49.50	48.49	46.38	44.28	42.17	40.06	37.95	35.84
56.50	33.73	31.63	29.52	27.41	25.30	23.19	21.08
63.50	18.98	16.87	14.76	12.65	10.54	8.43	6.33
70.50	4.22	2.11	0.00				

Quick TR-55 Ver.5.46 S/N:1315430271
Executed: 14:39:54 08-04-1993

MODIFIED RATIONAL METHOD
---- Graphical Summary for Maximum Required Storage ----

First peak outflow point assumed to occur at inflow recession leg.

SETTLERS MILL SECTION 3, BMP NOS. 3 & 4

```
*********************************************************************
*  RETURN FREQUENCY:  10 yr     |  Allowable Outflow:    42.00 cfs    *
*  'C' Adjustment: 1.000        |  Required Storage:    62,857 cu.ft. *
*-------------------------------------------------------------------*
*  Peak Inflow:   55.87 cfs       Inflow .HYD stored: 10N     .HYD   *
*********************************************************************
```

```
   |                Td =  46 minutes                   |  Return Freq:    10 yr
   /------- Approx. Duration for Max. Storage ------/  C adj.factor: 1.00
   |                                                  |
   |                                                  |
   |                Tc=   26.50  minutes              |
   |                I =   4.082  in/hr                |  Area (ac):    48.00
   |              . Q =   78.38  cfs                  |  Weighted C:    0.40
   |             .|.                                  |  Adjusted C:    0.40
F  |            .   .                                 |
L  |           .  |  .              Required Storage  |
O  |          .       .         .--    62,857 cu.ft. |  Td=      46 minutes
W  |         .    |    .        |                    |  I =   2.910 in/hr
   |        .     x x x x x x x|x x x x x x x x x x x  Q =   55.87 cfs
c  |       .                   |
f  |      .    x                                      x
s  |     .                                              o   Q=   42.00 cfs
   |    .   x                              o            |x  (Allow.Outflow)
   |   .  x                   .     o                  |
   |  .  x                o     .       NOT TO SCALE    |   x
   | . x       o                .       ============    |
   | o                           .                      |       x
   `-------------------------------------------------------|------------
                                                        52.58 minutes
```

EXECUTED: 08-05-1993 05:18:50 Return Freq: 10 years

```
*************************
*                       *
* SETTLERS MILL SEC 3   *
*                       *
*                       *
*                       *
*                       *
*************************
```

Inflow Hydrograph: A:10N .HYD
Rating Table file: A:93047 .PND

----INITIAL CONDITIONS----
Elevation = 22.75 ft
Outflow = 0.00 cfs
Storage = 85,276 cu-ft

GIVEN POND DATA			INTERMEDIATE ROUTING COMPUTATIONS	
ELEVATION (ft)	OUTFLOW (cfs)	STORAGE (cu-ft)	2S/t (cfs)	2S/t + O (cfs)
18.00	0.0	0	0.0	0.0
18.50	0.0	3,397	113.2	113.2
19.00	0.0	8,264	275.4	275.4
19.50	0.0	14,865	495.4	495.4
20.00	0.0	23,465	782.0	782.0
20.50	0.0	33,371	1112.2	1112.2
21.00	0.0	43,721	1457.1	1457.1
21.50	0.0	54,523	1817.1	1817.1
22.00	0.0	65,789	2192.5	2192.5
22.50	0.0	78,167	2605.0	2605.0
23.00	0.0	92,386	3078.9	3078.9
23.50	0.7	108,573	3618.4	3619.1
24.00	0.9	126,858	4227.7	4228.6
24.50	1.2	147,309	4909.3	4910.5
25.00	1.3	169,988	5665.1	5666.4
25.50	15.3	195,011	6499.1	6514.4
26.00	40.6	222,493	7415.0	7455.6
26.50	73.3	252,512	8415.4	8488.7
27.00	99.3	285,140	9502.8	9602.1
27.50	133.8	320,488	10680.8	10814.6
28.00	178.0	358,663	11953.0	12131.0

Time increment (t) = 1.0 min.

EXECUTED: 08-05-1993 05:18:50 Return Freq: 10 years

Pond File: A:93047 .PND
Inflow Hydrograph: A:10N .HYD
Outflow Hydrograph: A:10OUT .HYD

INFLOW HYDROGRAPH		ROUTING COMPUTATIONS				
TIME (min)	INFLOW (cfs)	I1+I2 (cfs)	2S/t - O (cfs)	2S/t + O (cfs)	OUTFLOW (cfs)	ELEVATION (ft)
0.5	1.05	-----	2842.0	2842.0	0.00	22.75
1.5	3.16	4.2	2846.2	2846.2	0.00	22.75
2.5	5.27	8.4	2854.6	2854.6	0.00	22.76
3.5	7.38	12.7	2867.3	2867.3	0.00	22.78
4.5	9.49	16.9	2884.1	2884.1	0.00	22.79
5.5	11.60	21.1	2905.2	2905.2	0.00	22.82
6.5	13.70	25.3	2930.5	2930.5	0.00	22.84
7.5	15.81	29.5	2960.0	2960.0	0.00	22.87
8.5	17.92	33.7	2993.8	2993.8	0.00	22.91
9.5	20.03	38.0	3031.7	3031.7	0.00	22.95
10.5	22.14	42.2	3073.9	3073.9	0.00	22.99
11.5	24.25	46.4	3120.2	3120.3	0.05	23.04
12.5	26.35	50.6	3170.5	3170.8	0.12	23.09
13.5	28.46	54.8	3225.0	3225.3	0.19	23.14
14.5	30.57	59.0	3283.5	3284.0	0.27	23.19
15.5	32.68	63.3	3346.0	3346.7	0.35	23.25
16.5	34.79	67.5	3412.6	3413.5	0.43	23.31
17.5	36.90	71.7	3483.3	3484.3	0.53	23.38
18.5	39.00	75.9	3557.9	3559.2	0.62	23.44
19.5	41.11	80.1	3636.6	3638.0	0.71	23.52
20.5	43.22	84.3	3719.5	3720.9	0.73	23.58
21.5	45.33	88.6	3806.5	3808.0	0.76	23.65
22.5	47.44	92.8	3897.7	3899.3	0.79	23.73
23.5	49.55	97.0	3993.0	3994.7	0.82	23.81
24.5	51.66	101.2	4092.5	4094.2	0.86	23.89
25.5	53.76	105.4	4196.2	4197.9	0.89	23.97
26.5	55.87	109.6	4303.9	4305.8	0.93	24.06
27.5	55.87	111.7	4413.7	4415.7	0.98	24.14
28.5	55.87	111.7	4523.4	4525.4	1.03	24.22
29.5	55.87	111.7	4633.0	4635.1	1.08	24.30
30.5	55.87	111.7	4742.4	4744.7	1.13	24.38
31.5	55.87	111.7	4851.8	4854.2	1.18	24.46
32.5	55.87	111.7	4961.2	4963.6	1.21	24.54
33.5	55.87	111.7	5070.5	5072.9	1.22	24.61
34.5	55.87	111.7	5179.7	5182.2	1.24	24.68
35.5	55.87	111.7	5289.0	5291.5	1.25	24.75
36.5	55.87	111.7	5398.2	5400.7	1.26	24.82
37.5	55.87	111.7	5507.4	5509.9	1.28	24.90
38.5	55.87	111.7	5616.5	5619.1	1.29	24.97
39.5	55.87	111.7	5723.6	5728.2	2.32	25.04
40.5	55.87	111.7	5827.2	5835.3	4.09	25.10
41.5	55.87	111.7	5927.3	5938.9	5.80	25.16
42.5	55.87	111.7	6024.1	6039.1	7.45	25.22
43.5	55.87	111.7	6117.8	6135.9	9.05	25.28
44.5	55.87	111.7	6208.3	6229.5	10.60	25.33

Pond File: A:93047 .PND
Inflow Hydrograph: A:10N .HYD
Outflow Hydrograph: A:10OUT .HYD

INFLOW HYDROGRAPH		ROUTING COMPUTATIONS				
TIME (min)	INFLOW (cfs)	I1+I2 (cfs)	2S/t - O (cfs)	2S/t + O (cfs)	OUTFLOW (cfs)	ELEVATION (ft)
45.5	55.87	111.7	6295.9	6320.1	12.09	25.39
46.5	54.82	110.7	6379.5	6406.6	13.52	25.44
47.5	52.71	107.5	6457.4	6487.1	14.85	25.48
48.5	50.60	103.3	6527.6	6560.7	16.54	25.52
49.5	48.49	99.1	6590.0	6626.7	18.32	25.56
50.5	46.38	94.9	6645.1	6684.9	19.88	25.59
51.5	44.28	90.7	6693.3	6735.8	21.25	25.62
52.5	42.17	86.5	6734.9	6779.7	22.43	25.64
53.5	40.06	82.2	6770.2	6817.1	23.44	25.66
54.5	37.95	78.0	6799.7	6848.2	24.27	25.68
55.5	35.84	73.8	6823.6	6873.5	24.95	25.69
56.5	33.73	69.6	6842.2	6893.1	25.48	25.70
57.5	31.63	65.4	6855.8	6907.5	25.87	25.71
58.5	29.52	61.2	6864.7	6917.0	26.12	25.71
59.5	27.41	56.9	6869.1	6921.6	26.25	25.72
60.5	25.30	52.7	6869.4	6921.9	26.25	25.72
61.5	23.19	48.5	6865.5	6917.8	26.15	25.71
62.5	21.08	44.3	6858.0	6909.8	25.93	25.71
63.5	18.98	40.1	6846.8	6898.0	25.61	25.70
64.5	16.87	35.9	6832.2	6882.6	25.20	25.70
65.5	14.76	31.6	6814.5	6863.9	24.69	25.69
66.5	12.65	27.4	6793.7	6841.9	24.10	25.67
67.5	10.54	23.2	6770.0	6816.9	23.43	25.66
68.5	8.43	19.0	6743.6	6789.0	22.68	25.65
69.5	6.33	14.8	6714.7	6758.4	21.86	25.63
70.5	4.22	10.6	6683.3	6725.2	20.97	25.61
71.5	2.11	6.3	6649.6	6689.6	20.01	25.59
72.5	0.00	2.1	6613.7	6651.7	18.99	25.57

********** SUMMARY OF ROUTING COMPUTATIONS **********

Pond File: A:93047 .PND
Inflow Hydrograph: A:10N .HYD
Outflow Hydrograph: A:10OUT .HYD

Starting Pond W.S. Elevation = 22.75 ft

***** Summary of Peak Outflow and Peak Elevation *****

Peak Inflow = 55.87 cfs
Peak Outflow = 26.25 cfs
Peak Elevation = 25.72 ft

***** Summary of Approximate Peak Storage *****

Initial Storage = 85,276 cu-ft
Peak Storage From Storm = 121,633 cu-ft

Total Storage in Pond = 206,909 cu-ft

Warning: Inflow hydrograph truncated on left side.

Quick TR-55 Ver.5.46 S/N:1315430271
Executed: 15:10:12 08-04-1993

>>>>> I-D-F Curve <<<<<

Recurrence Frequency = 25

DURATION minutes	INTENSITY inches/hour
0	0
5	8
6	7.75
7	7.5
8	7.25
9	7
10	6.8
15	6
20	5.4
30	4.4
40	3.6
50	3.25
60	2.8
120	1.75
180	1.35
240	1
300	.85
360	.725
480	.55
600	.45
720	.375
1080	.25
1440	.2

Quick TR-55 Ver.5.46 S/N:1315430271
Executed: 14:39:54 08-04-1993

MODIFIED RATIONAL METHOD
---- Summary for Single Storm Frequency ----

First peak outflow point assumed to occur at inflow recession leg.

SETTLERS MILL SECTION 3, BMP NOS. 3 & 4

RETURN FREQUENCY: 25 yr `C' Adjustment = 1.100 Allowable Q = 48.00 cfs

Hydrograph file duration= 50.00 minutes
Hydrograph file: 25N .HYD Tc = 26.50 minutes

Weighted 'C'	Adjusted 'C'	Duration minutes	Intens. in/hr	Areas acres	Qpeak cfs	VOLUMES Inflow (cu.ft.)	Storage (cu.ft.)
0.400	0.440	27	4.750	48.00	100.32	159,509	83,189
0.400	0.440	30	4.400	48.00	92.93	167,270	85,910
0.400	0.440	40	3.600	48.00	76.03	182,477	86,717
********** Storage Maximum							
0.400	0.440	50	3.250	48.00	68.64	205,920	95,760
0.400	0.440	60	2.800	48.00	59.14	212,890	88,330
0.400	0.440	120	1.750	48.00	36.96	Qpeak < Qallow	

Quick TR-55 Ver.5.46 S/N:1315430271
Executed: 14:39:54 08-04-1993

SETTLERS MILL SECTION 3, BMP NOS. 3 & 4

* * * * * * SUMMARY OF RATIONAL METHOD PEAK DISCHARGES * * * * * *

Q = adj * C * I * A
Where: Q=cfs, C=Weighted Runoff Coefficient, I=in/hour, A=acres
adj = 'C' adjustment factor for each return frequency

RETURN FREQUENCY = 25 years
'C' adjustment, k = 1.1
Adj. 'C' = Wtd.'C' x 1.1

Subarea Descr.	Runoff 'C'	Area acres	Tc (min)	Wtd. 'C'	Adj. 'C'	I in/hr	Total acres	Peak Q (cfs)
	0.400	48.00						
			26.50	0.400	0.440	4.750	48.00	100.32

Quick TR-55 Ver.5.46 S/N:1315430271
Executed: 14:39:54 08-04-1993

SETTLERS MILL SECTION 3, BMP NOS. 3 & 4

**** Modified Rational Hydrograph *****

Weighted C = 0.400 Area= 48.000 acres Tc = 26.50 minutes

Adjusted C = 0.440 Td= 50.00 min. I= 3.25 in/hr Qp= 68.64 cfs

RETURN FREQUENCY: 25 year storm Adj.factor = 1.10
Output file: 25N .HYD

HYDROGRAPH FOR MAXIMUM STORAGE
For the 25 Year Storm

Time increment = 1.00 Minutes
Time on left represents time for first Q in each row.

Time Minutes							
0.50	1.30	3.89	6.48	9.07	11.66	14.25	16.84
7.50	19.43	22.02	24.61	27.20	29.79	32.38	34.97
14.50	37.56	40.15	42.74	45.33	47.92	50.51	53.10
21.50	55.69	58.28	60.87	63.46	66.05	68.64	68.64
28.50	68.64	68.64	68.64	68.64	68.64	68.64	68.64
35.50	68.64	68.64	68.64	68.64	68.64	68.64	68.64
42.50	68.64	68.64	68.64	68.64	68.64	68.64	68.64
49.50	68.64	67.34	64.75	62.16	59.57	56.98	54.39
56.50	51.80	49.21	46.62	44.03	41.44	38.85	36.26
63.50	33.67	31.08	28.49	25.90	23.31	20.72	18.13
70.50	15.54	12.95	10.36	7.77	5.18	2.59	0.00

Quick TR-55 Ver.5.46 S/N:1315430271
Executed: 14:39:54 08-04-1993

MODIFIED RATIONAL METHOD
---- Graphical Summary for Maximum Required Storage ----

First peak outflow point assumed to occur at inflow recession leg.

SETTLERS MILL SECTION 3, BMP NOS. 3 & 4

```
*****************************************************************
*  RETURN FREQUENCY:  25 yr     |  Allowable Outflow:    48.00 cfs    *
*  'C' Adjustment: 1.100        |  Required Storage:    95,760 cu.ft. *
*---------------------------------------------------------------*
*  Peak Inflow:   68.64 cfs       Inflow .HYD stored: 25N     .HYD   *
*****************************************************************

    |                Td =  50 minutes                  |  Return Freq:    25 yr
    /-------- Approx. Duration for Max. Storage ------/  C adj.factor: 1.10
    |                                                  |
    |                                                  |
    |                Tc=   26.50  minutes              |
    |                I =   4.750  in/hr                |  Area (ac):    48.00
    |              . Q =  100.32  cfs                  |  Weighted C:    0.40
    |             .|.                                  |  Adjusted C:    0.44
F   |            .   .                                 |
L   |           .  |  .              Required Storage  |
O   |          .       .         .--    95,760 cu.ft. |  Td=      50 minutes
W   |         .    |    .        |                    |  I =   3.250 in/hr
    |        .     x x x x x x x |x x x x x x x x x x  Q =   68.64 cfs
c   |       .                    |
f   |      .    x                                     x
s   |     .                                              o   Q=   48.00 cfs
    |    .   x                              o            |x  (Allow.Outflow)
    |   .  x                   .     o                   |
    |  .  x                o    .       NOT TO SCALE     |   x
    | . x       o                .       ============    |
    | o                            .                     |      x
    `-----------------------------------------------------|------------
                                                        57.97 minutes
```

```
*************************
*                       *
* SETTLERS MILL SEC 3   *
*                       *
*                       *
*                       *
*                       *
*************************
```

Inflow Hydrograph: A:25N .HYD
Rating Table file: A:93047 .PND

----INITIAL CONDITIONS----
Elevation = 22.75 ft
Outflow = 0.00 cfs
Storage = 85,276 cu-ft

GIVEN POND DATA

ELEVATION (ft)	OUTFLOW (cfs)	STORAGE (cu-ft)
18.00	0.0	0
18.50	0.0	3,397
19.00	0.0	8,264
19.50	0.0	14,865
20.00	0.0	23,465
20.50	0.0	33,371
21.00	0.0	43,721
21.50	0.0	54,523
22.00	0.0	65,789
22.50	0.0	78,167
23.00	0.0	92,386
23.50	0.7	108,573
24.00	0.9	126,858
24.50	1.2	147,309
25.00	1.3	169,988
25.50	15.3	195,011
26.00	40.6	222,493
26.50	73.3	252,512
27.00	99.3	285,140
27.50	133.8	320,488
28.00	178.0	358,663

INTERMEDIATE ROUTING COMPUTATIONS

2S/t (cfs)	2S/t + O (cfs)
0.0	0.0
113.2	113.2
275.4	275.4
495.4	495.4
782.0	782.0
1112.2	1112.2
1457.1	1457.1
1817.1	1817.1
2192.5	2192.5
2605.0	2605.0
3078.9	3078.9
3618.4	3619.1
4227.7	4228.6
4909.3	4910.5
5665.1	5666.4
6499.1	6514.4
7415.0	7455.6
8415.4	8488.7
9502.8	9602.1
10680.8	10814.6
11953.0	12131.0

Time increment (t) = 1.0 min.

Pond File: A:93047 .PND
Inflow Hydrograph: A:25N .HYD
Outflow Hydrograph: A:25OUT .HYD

INFLOW HYDROGRAPH		ROUTING COMPUTATIONS				
TIME (min)	INFLOW (cfs)	I1+I2 (cfs)	2S/t - O (cfs)	2S/t + O (cfs)	OUTFLOW (cfs)	ELEVATION (ft)
0.5	1.30	-----	2842.0	2842.0	0.00	22.75
1.5	3.89	5.2	2847.2	2847.2	0.00	22.76
2.5	6.48	10.4	2857.5	2857.5	0.00	22.77
3.5	9.07	15.6	2873.1	2873.1	0.00	22.78
4.5	11.66	20.7	2893.8	2893.8	0.00	22.80
5.5	14.25	25.9	2919.7	2919.7	0.00	22.83
6.5	16.84	31.1	2950.8	2950.8	0.00	22.86
7.5	19.43	36.3	2987.1	2987.1	0.00	22.90
8.5	22.02	41.5	3028.5	3028.5	0.00	22.95
9.5	24.61	46.6	3075.2	3075.2	0.00	23.00
10.5	27.20	51.8	3126.8	3127.0	0.06	23.04
11.5	29.79	57.0	3183.6	3183.8	0.14	23.10
12.5	32.38	62.2	3245.3	3245.7	0.22	23.15
13.5	34.97	67.3	3312.0	3312.6	0.30	23.22
14.5	37.56	72.5	3383.8	3384.6	0.40	23.28
15.5	40.15	77.7	3460.5	3461.5	0.50	23.35
16.5	42.74	82.9	3542.2	3543.4	0.60	23.43
17.5	45.33	88.1	3628.8	3630.3	0.70	23.51
18.5	47.92	93.3	3720.6	3722.1	0.73	23.58
19.5	50.51	98.4	3817.5	3819.1	0.77	23.66
20.5	53.10	103.6	3919.5	3921.1	0.80	23.75
21.5	55.69	108.8	4026.7	4028.3	0.83	23.84
22.5	58.28	114.0	4138.9	4140.6	0.87	23.93
23.5	60.87	119.2	4256.2	4258.0	0.91	24.02
24.5	63.46	124.3	4378.6	4380.5	0.97	24.11
25.5	66.05	129.5	4506.1	4508.1	1.02	24.20
26.5	68.64	134.7	4638.6	4640.8	1.08	24.30
27.5	68.64	137.3	4773.6	4775.9	1.14	24.40
28.5	68.64	137.3	4908.5	4910.9	1.20	24.50
29.5	68.64	137.3	5043.3	5045.8	1.22	24.59
30.5	68.64	137.3	5178.1	5180.6	1.24	24.68
31.5	68.64	137.3	5312.9	5315.4	1.25	24.77
32.5	68.64	137.3	5447.6	5450.2	1.27	24.86
33.5	68.64	137.3	5582.3	5584.9	1.29	24.95
34.5	68.64	137.3	5715.3	5719.6	2.18	25.03
35.5	68.64	137.3	5843.8	5852.5	4.37	25.11
36.5	68.64	137.3	5968.1	5981.1	6.50	25.19
37.5	68.64	137.3	6088.3	6105.4	8.55	25.26
38.5	68.64	137.3	6204.5	6225.6	10.53	25.33
39.5	68.64	137.3	6316.9	6341.8	12.45	25.40
40.5	68.64	137.3	6425.5	6454.2	14.31	25.46
41.5	68.64	137.3	6529.6	6562.8	16.60	25.53
42.5	68.64	137.3	6628.1	6666.9	19.40	25.58
43.5	68.64	137.3	6721.3	6765.4	22.05	25.63
44.5	68.64	137.3	6809.5	6858.6	24.55	25.68

Pond File: A:93047 .PND
Inflow Hydrograph: A:25N .HYD
Outflow Hydrograph: A:25OUT .HYD

INFLOW HYDROGRAPH		ROUTING COMPUTATIONS				
TIME (min)	INFLOW (cfs)	I1+I2 (cfs)	2S/t - O (cfs)	2S/t + O (cfs)	OUTFLOW (cfs)	ELEVATION (ft)
45.5	68.64	137.3	6892.9	6946.7	26.92	25.73
46.5	68.64	137.3	6971.8	7030.2	29.17	25.77
47.5	68.64	137.3	7046.5	7109.1	31.29	25.82
48.5	68.64	137.3	7117.2	7183.8	33.30	25.86
49.5	68.64	137.3	7184.1	7254.5	35.20	25.89
50.5	67.34	136.0	7246.2	7320.1	36.96	25.93
51.5	64.75	132.1	7301.2	7378.3	38.52	25.96
52.5	62.16	126.9	7348.4	7428.1	39.86	25.99
53.5	59.57	121.7	7388.0	7470.1	41.06	26.01
54.5	56.98	116.6	7420.3	7504.6	42.15	26.02
55.5	54.39	111.4	7445.6	7531.6	43.01	26.04
56.5	51.80	106.2	7464.5	7551.8	43.65	26.05
57.5	49.21	101.0	7477.4	7565.5	44.08	26.05
58.5	46.62	95.8	7484.6	7573.2	44.32	26.06
59.5	44.03	90.7	7486.4	7575.2	44.39	26.06
60.5	41.44	85.5	7483.3	7571.9	44.28	26.06
61.5	38.85	80.3	7475.6	7563.6	44.02	26.05
62.5	36.26	75.1	7463.5	7550.7	43.61	26.05
63.5	33.67	69.9	7447.3	7533.4	43.06	26.04
64.5	31.08	64.8	7427.2	7512.0	42.39	26.03
65.5	28.49	59.6	7403.6	7486.8	41.59	26.02
66.5	25.90	54.4	7376.7	7458.0	40.68	26.00
67.5	23.31	49.2	7346.3	7425.9	39.80	25.98
68.5	20.72	44.0	7312.6	7390.3	38.85	25.97
69.5	18.13	38.8	7275.9	7351.5	37.80	25.94
70.5	15.54	33.7	7236.2	7309.5	36.67	25.92
71.5	12.95	28.5	7193.7	7264.7	35.47	25.90
72.5	10.36	23.3	7148.7	7217.0	34.19	25.87
73.5	7.77	18.1	7101.1	7166.8	32.84	25.85
74.5	5.18	13.0	7051.2	7114.1	31.42	25.82
75.5	2.59	7.8	6999.1	7059.0	29.94	25.79
76.5	0.00	2.6	6944.9	7001.7	28.40	25.76

********** SUMMARY OF ROUTING COMPUTATIONS **********

Pond File: A:93047 .PND
Inflow Hydrograph: A:25N .HYD
Outflow Hydrograph: A:25OUT .HYD

Starting Pond W.S. Elevation = 22.75 ft

***** Summary of Peak Outflow and Peak Elevation *****

Peak Inflow = 68.64 cfs
Peak Outflow = 44.39 cfs
Peak Elevation = 26.06 ft

***** Summary of Approximate Peak Storage *****

Initial Storage = 85,276 cu-ft
Peak Storage From Storm = 140,694 cu-ft

Total Storage in Pond = 225,970 cu-ft

Warning: Inflow hydrograph truncated on left side.

Quick TR-55 Ver.5.46 S/N:1315430271
Executed: 15:10:12 08-04-1993

>>>>> I-D-F Curve <<<<<

Recurrence Frequency = 100

DURATION minutes	INTENSITY inches/hour
0	0
5	9.25
6	9.0
7	8.85
8	8.5
9	8.25
10	8.0
15	7.2
20	6.5
30	5.25
40	4.5
50	3.8
60	3.4
120	2.25
180	1.7
240	1.3
300	1.1
360	.9
480	.7
600	.57
720	.48
1080	.32
1440	.28

Quick TR-55 Ver.5.46 S/N:1315430271
Executed: 14:39:54 08-04-1993

MODIFIED RATIONAL METHOD
---- Summary for Single Storm Frequency ----

First peak outflow point assumed to occur at inflow recession leg.

SETTLERS MILL SECTION 3, BMP NOS. 3 & 4

RETURN FREQUENCY: 100 yr 'C' Adjustment = 1.250 Allowable Q = 57.60 cfs

Hydrograph file duration= 87.00 minutes
Hydrograph file: 100N .HYD Tc = 26.50 minutes

Weighted 'C'	Adjusted 'C'	Duration minutes	Intens. in/hr	Areas acres	Qpeak cfs	VOLUMES Inflow (cu.ft.)	Storage (cu.ft.)
0.400	0.500	27	5.688	48.00	136.50	217,035	125,451
0.400	0.500	30	5.250	48.00	126.00	226,800	129,168
0.400	0.500	40	4.500	48.00	108.00	259,200	144,288
0.400	0.500	50	3.800	48.00	91.20	273,600	141,408
0.400	0.500	60	3.400	48.00	81.60	293,760	144,288
********** Storage Maximum							
0.400	0.500	87	2.883	48.00	69.18	361,120	164,992
**********							
0.400	0.500	120	2.250	48.00	54.00	Qpeak < Qallow	

Quick TR-55 Ver.5.46 S/N:1315430271
Executed: 14:39:54 08-04-1993

SETTLERS MILL SECTION 3, BMP NOS. 3 & 4

**** Modified Rational Hydrograph *****

Weighted C = 0.400 Area= 48.000 acres Tc = 26.50 minutes

Adjusted C = 0.500 Td= 87.00 min. I= 2.88 in/hr Qp= 69.18 cfs

RETURN FREQUENCY: 100 year storm Adj.factor = 1.25
Output file: 100N .HYD

HYDROGRAPH FOR MAXIMUM STORAGE
For the 100 Year Storm

Time increment = 1.00 Minutes
Time on left represents time for first Q in each row.

Time Minutes							
0.50	1.31	3.92	6.53	9.14	11.75	14.36	16.97
7.50	19.58	22.19	24.80	27.41	30.02	32.63	35.24
14.50	37.85	40.46	43.07	45.68	48.30	50.91	53.52
21.50	56.13	58.74	61.35	63.96	66.57	69.18	69.18
28.50	69.18	69.18	69.18	69.18	69.18	69.18	69.18
35.50	69.18	69.18	69.18	69.18	69.18	69.18	69.18
42.50	69.18	69.18	69.18	69.18	69.18	69.18	69.18
49.50	69.18	69.18	69.18	69.18	69.18	69.18	69.18
56.50	69.18	69.18	69.18	69.18	69.18	69.18	69.18
63.50	69.18	69.18	69.18	69.18	69.18	69.18	69.18
70.50	69.18	69.18	69.18	69.18	69.18	69.18	69.18
77.50	69.18	69.18	69.18	69.18	69.18	69.18	69.18
84.50	69.18	69.18	69.18	67.87	65.26	62.65	60.04
91.50	57.43	54.82	52.21	49.60	46.99	44.38	41.77
98.50	39.16	36.55	33.94	31.33	28.72	26.11	23.50
105.50	20.88	18.27	15.66	13.05	10.44	7.83	5.22
112.50	2.61	0.00					

Quick TR-55 Ver.5.46 S/N:1315430271
Executed: 14:39:54 08-04-1993

SETTLERS MILL SECTION 3, BMP NOS. 3 & 4

* * * * * * SUMMARY OF RATIONAL METHOD PEAK DISCHARGES * * * * * *

Q = adj * C * I * A
Where: Q=cfs, C=Weighted Runoff Coefficient, I=in/hour, A=acres
adj = 'C' adjustment factor for each return frequency

RETURN FREQUENCY = 100 years
'C' adjustment, k = 1.25
Adj. 'C' = Wtd.'C' x 1.25

Subarea Descr.	Runoff 'C'	Area acres	Tc (min)	Wtd. 'C'	Adj. 'C'	I in/hr	Total acres	Peak Q (cfs)
	0.400	48.00						
			26.50	0.400	0.500	5.688	48.00	136.50

Quick TR-55 Ver.5.46 S/N:1315430271
Executed: 14:39:54 08-04-1993

MODIFIED RATIONAL METHOD
---- Graphical Summary for Maximum Required Storage ----

First peak outflow point assumed to occur at inflow recession leg.

SETTLERS MILL SECTION 3, BMP NOS. 3 & 4

```
*********************************************************************
*  RETURN FREQUENCY: 100 yr      |  Allowable Outflow:    57.60 cfs    *
*  'C' Adjustment: 1.250         |  Required Storage:   164,992 cu.ft. *
*-------------------------------------------------------------------*
*  Peak Inflow:   69.18 cfs        Inflow .HYD stored: 100N    .HYD   *
*********************************************************************
```

```
    |                Td =  87 minutes                    |  Return Freq:   100 yr
    /------- Approx. Duration for Max. Storage ------/  C adj.factor: 1.25
    |                                                    |
    |                                                    |
    |                Tc=   26.50  minutes                |
    |                I =   5.688  in/hr                  |  Area (ac):     48.00
    |              . Q =  136.50  cfs                    |  Weighted C:     0.40
    |             .|.                                    |  Adjusted C:     0.50
F   |            .   .                                   |
L   |           .  |  .              Required Storage    |
O   |          .       .         .--   164,992 cu.ft.   |  Td=       87 minutes
W   |         .    |    .        |                     |  I =    2.883 in/hr
    |        .     x x x x x x x x|x x x x x x x x x x x  Q =    69.18 cfs
c   |       .                     |
f   |      .    x                                        x
s   |     .                                                o   Q=   57.60 cfs
    |    .   x                                o           |x  (Allow.Outflow)
    |   .  x                    .     o                   |
    |  .  x                o    .       NOT TO SCALE      |   x
    | . x       o                .      ============      |
    | o                           .                       |      x
    `-----------------------------------------------------|------------
                                                          91.44 minutes
```

```
*************************
*                       *
* SETTLERS MILL SEC 3   *
*                       *
*                       *
*                       *
*                       *
*************************
```

Inflow Hydrograph: A:100N .HYD
Rating Table file: A:93047 .PND

----INITIAL CONDITIONS----
Elevation = 22.75 ft
Outflow = 0.00 cfs
Storage = 85,276 cu-ft

GIVEN POND DATA			INTERMEDIATE ROUTING COMPUTATIONS	
ELEVATION (ft)	OUTFLOW (cfs)	STORAGE (cu-ft)	2S/t (cfs)	2S/t + O (cfs)
18.00	0.0	0	0.0	0.0
18.50	0.0	3,397	113.2	113.2
19.00	0.0	8,264	275.4	275.4
19.50	0.0	14,865	495.4	495.4
20.00	0.0	23,465	782.0	782.0
20.50	0.0	33,371	1112.2	1112.2
21.00	0.0	43,721	1457.1	1457.1
21.50	0.0	54,523	1817.1	1817.1
22.00	0.0	65,789	2192.5	2192.5
22.50	0.0	78,167	2605.0	2605.0
23.00	0.0	92,386	3078.9	3078.9
23.50	0.7	108,573	3618.4	3619.1
24.00	0.9	126,858	4227.7	4228.6
24.50	1.2	147,309	4909.3	4910.5
25.00	1.3	169,988	5665.1	5666.4
25.50	15.3	195,011	6499.1	6514.4
26.00	40.6	222,493	7415.0	7455.6
26.50	73.3	252,512	8415.4	8488.7
27.00	99.3	285,140	9502.8	9602.1
27.50	133.8	320,488	10680.8	10814.6
28.00	178.0	358,663	11953.0	12131.0

Time increment (t) = 1.0 min.

Pond File: A:93047 .PND
Inflow Hydrograph: A:100N .HYD
Outflow Hydrograph: A:100OUT .HYD

INFLOW HYDROGRAPH		ROUTING COMPUTATIONS				
TIME (min)	INFLOW (cfs)	I1+I2 (cfs)	2S/t - O (cfs)	2S/t + O (cfs)	OUTFLOW (cfs)	ELEVATION (ft)
0.5	1.31	-----	2842.0	2842.0	0.00	22.75
1.5	3.92	5.2	2847.2	2847.2	0.00	22.76
2.5	6.53	10.5	2857.6	2857.6	0.00	22.77
3.5	9.14	15.7	2873.3	2873.3	0.00	22.78
4.5	11.75	20.9	2894.2	2894.2	0.00	22.81
5.5	14.36	26.1	2920.3	2920.3	0.00	22.83
6.5	16.97	31.3	2951.6	2951.6	0.00	22.87
7.5	19.58	36.6	2988.2	2988.2	0.00	22.90
8.5	22.19	41.8	3030.0	3030.0	0.00	22.95
9.5	24.80	47.0	3077.0	3077.0	0.00	23.00
10.5	27.41	52.2	3129.0	3129.2	0.07	23.05
11.5	30.02	57.4	3186.2	3186.5	0.14	23.10
12.5	32.63	62.7	3248.4	3248.8	0.22	23.16
13.5	35.24	67.9	3315.7	3316.3	0.31	23.22
14.5	37.85	73.1	3387.9	3388.7	0.40	23.29
15.5	40.46	78.3	3465.2	3466.3	0.50	23.36
16.5	43.07	83.5	3547.6	3548.8	0.61	23.43
17.5	45.68	88.8	3634.9	3636.3	0.71	23.51
18.5	48.30	94.0	3727.4	3728.9	0.74	23.59
19.5	50.91	99.2	3825.1	3826.6	0.77	23.67
20.5	53.52	104.4	3927.9	3929.5	0.80	23.75
21.5	56.13	109.7	4035.9	4037.6	0.84	23.84
22.5	58.74	114.9	4149.0	4150.8	0.87	23.94
23.5	61.35	120.1	4267.3	4269.1	0.92	24.03
24.5	63.96	125.3	4390.6	4392.6	0.97	24.12
25.5	66.57	130.5	4519.1	4521.2	1.03	24.21
26.5	69.18	135.8	4652.7	4654.8	1.09	24.31
27.5	69.18	138.4	4788.7	4791.0	1.15	24.41
28.5	69.18	138.4	4924.7	4927.1	1.20	24.51
29.5	69.18	138.4	5060.6	5063.1	1.22	24.60
30.5	69.18	138.4	5196.5	5199.0	1.24	24.69
31.5	69.18	138.4	5332.3	5334.9	1.26	24.78
32.5	69.18	138.4	5468.2	5470.7	1.27	24.87
33.5	69.18	138.4	5603.9	5606.5	1.29	24.96
34.5	69.18	138.4	5737.2	5742.3	2.55	25.04
35.5	69.18	138.4	5866.0	5875.5	4.75	25.12
36.5	69.18	138.4	5990.6	6004.4	6.88	25.20
37.5	69.18	138.4	6111.1	6129.0	8.94	25.27
38.5	69.18	138.4	6227.6	6249.5	10.93	25.34
39.5	69.18	138.4	6340.3	6366.0	12.85	25.41
40.5	69.18	138.4	6449.2	6478.7	14.71	25.48
41.5	69.18	138.4	6553.1	6587.6	17.27	25.54
42.5	69.18	138.4	6651.3	6691.4	20.06	25.59
43.5	69.18	138.4	6744.3	6789.7	22.70	25.65
44.5	69.18	138.4	6832.2	6882.6	25.20	25.70

Pond File: A:93047 .PND
Inflow Hydrograph: A:100N .HYD
Outflow Hydrograph: A:100OUT .HYD

INFLOW HYDROGRAPH		ROUTING COMPUTATIONS				
TIME (min)	INFLOW (cfs)	I1+I2 (cfs)	2S/t - O (cfs)	2S/t + O (cfs)	OUTFLOW (cfs)	ELEVATION (ft)
45.5	69.18	138.4	6915.5	6970.6	27.56	25.74
46.5	69.18	138.4	6994.2	7053.8	29.80	25.79
47.5	69.18	138.4	7068.7	7132.6	31.92	25.83
48.5	69.18	138.4	7139.3	7207.1	33.92	25.87
49.5	69.18	138.4	7206.0	7277.6	35.82	25.91
50.5	69.18	138.4	7269.1	7344.3	37.61	25.94
51.5	69.18	138.4	7328.9	7407.5	39.31	25.97
52.5	69.18	138.4	7385.3	7467.2	40.97	26.01
53.5	69.18	138.4	7438.1	7523.6	42.76	26.03
54.5	69.18	138.4	7487.6	7576.5	44.43	26.06
55.5	69.18	138.4	7534.0	7626.0	45.99	26.08
56.5	69.18	138.4	7577.4	7672.4	47.46	26.10
57.5	69.18	138.4	7618.1	7715.8	48.84	26.13
58.5	69.18	138.4	7656.2	7756.5	50.13	26.15
59.5	69.18	138.4	7691.9	7794.6	51.33	26.16
60.5	69.18	138.4	7725.4	7830.3	52.46	26.18
61.5	69.18	138.4	7756.7	7863.7	53.52	26.20
62.5	69.18	138.4	7786.0	7895.1	54.51	26.21
63.5	69.18	138.4	7813.5	7924.4	55.44	26.23
64.5	69.18	138.4	7839.3	7951.9	56.31	26.24
65.5	69.18	138.4	7863.4	7977.6	57.12	26.25
66.5	69.18	138.4	7886.0	8001.7	57.89	26.26
67.5	69.18	138.4	7907.1	8024.3	58.60	26.28
68.5	69.18	138.4	7926.9	8045.5	59.27	26.29
69.5	69.18	138.4	7945.5	8065.3	59.90	26.30
70.5	69.18	138.4	7962.9	8083.8	60.49	26.30
71.5	69.18	138.4	7979.2	8101.2	61.04	26.31
72.5	69.18	138.4	7994.4	8117.5	61.55	26.32
73.5	69.18	138.4	8008.7	8132.8	62.04	26.33
74.5	69.18	138.4	8022.1	8147.1	62.49	26.33
75.5	69.18	138.4	8034.6	8160.4	62.91	26.34
76.5	69.18	138.4	8046.4	8173.0	63.31	26.35
77.5	69.18	138.4	8057.4	8184.7	63.68	26.35
78.5	69.18	138.4	8067.7	8195.7	64.03	26.36
79.5	69.18	138.4	8077.3	8206.0	64.35	26.36
80.5	69.18	138.4	8086.4	8215.7	64.66	26.37
81.5	69.18	138.4	8094.8	8224.7	64.95	26.37
82.5	69.18	138.4	8102.8	8233.2	65.21	26.38
83.5	69.18	138.4	8110.2	8241.1	65.46	26.38
84.5	69.18	138.4	8117.2	8248.6	65.70	26.38
85.5	69.18	138.4	8123.7	8255.5	65.92	26.39
86.5	69.18	138.4	8129.8	8262.0	66.13	26.39
87.5	67.87	137.1	8134.3	8266.8	66.28	26.39
88.5	65.26	133.1	8134.8	8267.4	66.30	26.39
89.5	62.65	127.9	8130.4	8262.7	66.15	26.39
90.5	60.04	122.7	8121.4	8253.1	65.84	26.39

Pond File: A:93047 .PND
Inflow Hydrograph: A:100N .HYD
Outflow Hydrograph: A:100OUT .HYD

INFLOW HYDROGRAPH		ROUTING COMPUTATIONS				
TIME (min)	INFLOW (cfs)	I1+I2 (cfs)	2S/t - O (cfs)	2S/t + O (cfs)	OUTFLOW (cfs)	ELEVATION (ft)
91.5	57.43	117.5	8108.1	8238.9	65.39	26.38
92.5	54.82	112.3	8090.7	8220.4	64.81	26.37
93.5	52.21	107.0	8069.6	8197.8	64.09	26.36
94.5	49.60	101.8	8044.9	8171.4	63.26	26.35
95.5	46.99	96.6	8016.9	8141.5	62.31	26.33
96.5	44.38	91.4	7985.7	8108.2	61.26	26.32
97.5	41.77	86.2	7951.6	8071.9	60.11	26.30
98.5	39.16	80.9	7914.8	8032.6	58.86	26.28
99.5	36.55	75.7	7875.5	7990.6	57.53	26.26
100.5	33.94	70.5	7833.7	7946.0	56.12	26.24
101.5	31.33	65.3	7789.7	7899.0	54.64	26.21
102.5	28.72	60.1	7743.6	7849.8	53.08	26.19
103.5	26.11	54.8	7695.5	7798.5	51.45	26.17
104.5	23.50	49.6	7645.6	7745.2	49.77	26.14
105.5	20.88	44.4	7594.0	7690.0	48.02	26.11
106.5	18.27	39.2	7540.7	7633.1	46.22	26.09
107.5	15.66	33.9	7485.9	7574.6	44.37	26.06
108.5	13.05	28.7	7429.6	7514.6	42.47	26.03
109.5	10.44	23.5	7372.1	7453.1	40.53	26.00
110.5	7.83	18.3	7312.6	7390.3	38.85	25.97
111.5	5.22	13.1	7251.5	7325.7	37.11	25.93
112.5	2.61	7.8	7188.7	7259.3	35.32	25.90
113.5	0.00	2.6	7124.3	7191.3	33.50	25.86

********** SUMMARY OF ROUTING COMPUTATIONS **********

Pond File: A:93047 .PND
Inflow Hydrograph: A:100N .HYD
Outflow Hydrograph: A:100OUT .HYD

Starting Pond W.S. Elevation = 22.75 ft

***** Summary of Peak Outflow and Peak Elevation *****

Peak Inflow = 69.18 cfs
Peak Outflow = 66.30 cfs
Peak Elevation = 26.39 ft

***** Summary of Approximate Peak Storage *****

Initial Storage = 85,276 cu-ft
Peak Storage From Storm = 160,806 cu-ft

Total Storage in Pond = 246,083 cu-ft

Warning: Inflow hydrograph truncated on left side.

TABLE 3.14-B
PIPE FLOW CHART, n = 0.013

FOR REINFORCED CONCRETE PIPE INLET $K_m = K_e + K_b = 0.65$ AND 70 FEET OF REINFORCED CONCRETE PIPE CONDUIT (full flow assumed)

Note correction factors for pipe lengths other than 70 feet

diameter of pipe in inches

H, in feet	12"	15"	18"	21"	24"	30"	36"	42"	48"	54"	60"	66"	72"	78"	84"	90"	96"	102"
1	3.22	5.44	8.29	11.8	15.9	26.0	38.6	53.8	71.4	91.5	114	139	167	197	229	264	302	342
2	4.55	7.69	11.7	16.7	22.5	36.8	54.6	76.0	101	129	161	197	236	278	324	374	427	483
3	5.57	9.42	14.4	20.4	27.5	45.0	66.9	93.1	124	159	198	241	289	341	397	458	523	592
4	6.43	10.9	16.6	23.5	31.8	52.0	77.3	108	143	183	228	278	334	394	459	529	604	683
5	7.19	12.2	18.5	26.3	35.5	58.1	86.4	120	160	205	255	311	373.	440	513	591	675	764
6	7.88	13.3	20.3	28.8	38.9	63.7	94.6	132	175	224	280	341	409	482	562	647	739	837
7	8.51	14.4	21.9	31.1	42.0	68.8	102	142	189	242	302	368	441	521	607	699	798	904
8.14 → 8	9.10	15.4	23.5	33.3	44.9	73.5	109	152	202	259	323	394	472	557	685	748	854	966
9	9.65	16.3	24.9	35.3	47.7	78.0	116	161	214	275	342	418	500	590	688	793	905	1025
10	10.2	17.2	26.2	37.2	50.2	82.2	122	170	226	289	361	440	527	622	725	836	954	1080
11	10.7	18.0	27.5	39.0	52.7	86.2	128	178	237	304	379	462	553	653	761	877	1001	1133
12	11.1	18.9	28.7	40.8	55.0	90.1	134	186	247	317	395	482	578	682	794	916	1045	1184
13	11.6	19.6	29.9	42.4	57.3	93.7	139	194	257	330	411	502	601	710	827	953	1088	1232
14	12.0	20.4	31.0	44.1	59.4	97.3	145	201	267	342	427	521	624	736	858	989	1129	1278
15	12.5	21.1	32.1	45.6	61.5	101	150	208	277	354	442	539	646	762	888	1024	1169	1323
16	12.9	21.8	33.2	47.1	63.5	104	155	215	286	366	457	557	667	787	917	1057	1207	1367
17	13.3	22.4	34.2	48.5	65.5	107	159	222	294	377	471	574	688	812	946	1090	1244	1409
18	13.7	23.1	35.2	49.9	67.4	110	164	228	303	388	484	591	708	835	973	1121	1280	1450
19	14.0	23.7	36.1	51.3	69.2	113	168	234	311	399	497	607	727	858	1000	1152	1315	1489
20	14.4	24.3	37.1	52.6	71.0	116	173	240	319	409	510	623	746	880	1026	1182	1350	1528
21	14.7	24.9	38.0	53.9	72.8	119	177	246	327	419	523	638	764	902	1051	1211	1383	1566
22	15.1	25.5	38.9	55.2	74.5	122	181	252	335	429	535	653	782	923	1076	1240	1415	1603
23	15.4	26.1	39.8	56.5	76.2	125	186	258	342	439	547	668	800	944	1100	1268	1447	1639
24	15.8	26.7	40.6	57.7	77.8	127	189	263	350	448	559	682	817	964	1123	1295	1478	1674
25	16.1	27.2	41.5	58.9	79.4	130	193	269	357	458	571	696	834	984	1147	1322	1509	1708
26	16.4	27.7	42.3	60.0	81.0	133	197	274	364	467	582	710	850	1004	1169	1348	1539	1742
27	16.7	28.3	43.1	61.2	82.5	135	201	279	371	476	593	723	867	1023	1192	1373	1568	1775
28	17.0	28.8	43.9	62.3	84.1	138	204	285	378	484	604	737	883	1041	1214	1399	1597	1808
29	17.3	29.3	44.7	63.4	85.5	140	208	290	384	493	615	750	898	1060	1235	1423	1625	1840
30	17.6	29.8	45.4	64.5	87.0	142	212	294	391	501	625	763	913	1078	1256	1448	1653	1871
L, in feet	**Correction Factors For Other Pipe Lengths**																	
20	1.30	1.24	1.21	1.18	1.15	1.12	1.10	1.08	1.07	1.06	1.05	1.05	1.04	1.04	1.03	1.03	1.03	1.03
30	1.22	1.18	1.15	1.13	1.12	1.09	1.08	1.06	1.05	1.05	1.04	1.04	1.03	1.03	1.03	1.02	1.02	1.02
40	1.15	1.13	1.11	1.10	1.08	1.07	1.05	1.05	1.04	1.03	1.03	1.03	1.02	1.02	1.02	1.02	1.02	1.02
50	1.09	1.08	1.07	1.06	1.05	1.04	1.04	1.03	1.03	1.02	1.02	1.02	1.02	1.01	1.01	1.01	1.01	1.01
60	1.04	1.04	1.03	1.03	1.03	1.02	1.02	1.02	1.01	1.01	1.01	1.01	1.01	1.01	1.01	1.01	1.01	1.01
70	1.00	1.00	1.00	1.00	1.00	1.00	1.00	1.00	1.00	1.00	1.00	1.00	1.00	1.00	1.00	1.00	1.00	1.00
80	.96	.97	.97	.97	.98	.98	.98	.99	.99	.99	.99	.99	.99	.99	.99	.99	.99	.99
90	.93	.94	.94	.95	.95	.96	.97	.97	.98	.98	.98	.98	.98	.99	.99	.99	.99	.99
100	.90	.91	.92	.93	.93	.95	.95	.96	.97	.97	.97	.98	.98	.98	.98	.98	.98	.99
120	.84	.86	.87	.89	.90	.91	.93	.94	.94	.95	.96	.96	.96	.97	.97	.97	.97	.98
140	.80	.82	.83	.85	.86	.88	.90	.91	.92	.93	.94	.94	.95	.95	.96	.96	.96	.97
160	.76	.78	.80	.82	.83	.86	.88	.89	.90	.91	.92	.93	.94	.94	.95	.95	.95	.96

CHECK BARREL CAPACITY AT 26.39' PEAK ELEV.
WITH & DISCHARGE END AT 18.25'

Source: USDA-SCS

1992 3.14

REVISED 8/19/93

TEMPORARY SEDIMENT BASIN DESIGN DATA SHEET

(with or without an emergency spillway)

Project SETTLERS MILL SECTION 3 A & B

Basin # 3 & 4 COMBINED Location EAST OF LOCKWOOD DR.

Total area draining to basin: 48 acres.

Basin Volume Design

Wet Storage:

1. Minimum required volume = 67 cu. yds. x Total Drainage Area (acres).

   67 cu. yds. x 48 acres = 3216 cu. yds. [86832 cu ft]

2. Available basin volume = 3158 cu. yds. at elevation 22.75. (From storage - elevation curve)

3. Excavate [illegible] cu. yds. to obtain required volume*.

   * Elevation corresponding to required volume = invert of the dewatering orifice.

4. Available volume before cleanout required.

   33 cu. yds. x 48 acres = 1912 cu. yds.

5. Elevation corresponding to cleanout level = 21.5.

   (From Storage - Elevation Curve)

6. Distance from invert of the dewatering orifice to cleanout level = 1.25 ft. (Min. = 1.0 ft.)

Dry Storage:

7. Minimum required volume = 67 cu. yds. x Total Drainage Area (acres).

   67 cu. yds. x 48 acres = 3216 cu. yds.

MC016_COMMON_AREA_SETTLERS_MILL_SEC_3 - 066

8. Total available basin volume at crest of riser* = 6296 cu. yds. at elevation 25.0. (From Storage - Elevation Curve)

* Minimum = 134 cu. yds./acre of total drainage area.

9. Diameter of dewatering orifice = 6 in.

10. Diameter of flexible tubing = N/A in. (diameter of dewatering orifice plus 2 inches). USING RIGID PIPING FOR PERMANENT TRASH PROTECTION

Preliminary Design Elevations

11. Crest of Riser = 25.5

Top of Dam = 28.0

Design High Water = 26.03 [25 YEAR] 25.32 [2 YEAR]

Upstream Toe of Dam = 18

Basin Shape

12. Length of Flow / Effective Width — L / We = 100 / 50

If > 2, baffles are not required 2

If < 2, baffles are required _____

Runoff

13. Q_2 = 36.48 cfs (From Chapter 5)

14. Q_{25} = 68.64 cfs (From Chapter 5)

Principal Spillway Design

15. With emergency spillway, required spillway capacity $Q_p = Q_2 =$ 36.48 cfs. (riser and barrel)

Without emergency spillway, required spillway capacity $Q_p = Q_{25} =$ 68.64 cfs. (riser and barrel)

MC016_COMMON_AREA_SETTLERS_MILL_SEC_3 - 067

16. With emergency spillway:

Assumed available head (h) = 1.5 ft. (Using Q_2)

h = Crest of Emergency Spillway Elevation - Crest of Riser Elevation

Without emergency spillway:

Assumed available head (h) = N/A ft. (Using Q_{25})

h = Design High Water Elevation - Crest of Riser Elevation

17. Riser diameter (D_r) = 48 in. Actual head (h) = 0.40 ft. (2 YEAR) / 1.08 ft (25 YEAR)

(From Plate 3.14-8.)

Note: Avoid orifice flow conditions.

18. Barrel length (l) = 60 ft.

Head (H) on barrel through embankment = * ft.

(From Plate 3.14-7).

7.65 2 YEAR
7.84 25 YEAR
8.14 100 YEAR

19. Barrel diameter = 30 in.

(From Plate 3.14-B [concrete pipe] or Plate 3.14-A [corrugated pipe]).

20. Trash rack and anti-vortex device

Diameter = 78 inches.

Height = 24 inches.

(From Table 3.14-D).

Emergency Spillway Design

21. Required spillway capacity Q_e = $Q_{\cancel{25}\,100}$ - Q_p = 69.18 - 65.98 cfs. = 3.2'

22. Bottom width (b) = 10 ft.; the slope of the exit channel (s) = 0.20 ft./foot; and the minimum length of the exit channel (x) = 50 ft.
(From Table 3.14-C).

MC016_COMMON_AREA_SETTLERS_MILL_SEC_3 - 068

Anti-Seep Collar Design

23. Depth of water at principal spillway crest (Y) = 6.75 ft.

Slope of upstream face of embankment (Z) = 3 :1.

Slope of principal spillway barrel (S_b) = 2.0 %

Length of barrel in saturated zone (L_s) = 82.5 ft. > 60 FT

- required

24. Number of collars required = 0 dimensions = _____

(from Plate 3.14-12).

Final Design Elevations

25. Top of Dam = 28

Design High Water = 26.39 {100 YEAR}

Emergency Spillway Crest = 26.5

Principal Spillway Crest = 25.0

Dewatering Orifice Invert = 22.75

Cleanout Elevation = 21.5

Elevation of Upstream Toe of Dam or Excavated Bottom of "Wet Storage Area" (if excavation was performed) = 18.0 ±

MC016_COMMON_AREA_SETTLERS_MILL_SEC_3 - 069

STORM SEWER DESIGN COMPUTATIONS

L & D 229

ROUTE: _____ PROJ. SETTLERS MILL SEC 3
COUNTY James City DISTRICT 93047
DESCRIPTION 10 YEAR STORM ROAD "A"

SHEET 1 OF 4

FROM POINT	TO POINT	AREA DRAIN. "A" ACRES	RUN-OFF COEF. C	CA INCRE-MENT	CA ACCUM-ULATED	INLET TIME MIN-UTES	RAIN FALL IN./HR.	RUNOFF Q C.F.S.	INVERT ELEVATIONS UPPER END	INVERT ELEVATIONS LOWER END	LENGTH FT.	SLOPE FT./FT.	DIA. IN.	CAPA-CITY C.F.S.	VEL. F.P.S.	FLOW TIME SEC.	REMARKS
(1)	(2)	(3)	(4)	(5)	(6)	(7)	(8)	(9)	(10)	(11)	(12)	(13)	(14)	(15)	(16)	(17)	(18)
AREA A	10	0.50	0.35	0.175		15	5.3	0.93									
10	9							0.93	70.90	69.10	120	0.015	15"	7.9	4.3	25	TOP 74.61
AREA B	9	1.10	0.35	0.385		20	4.6	1.77									
AREA C	11	0.18	0.70	0.126		10	6.0	0.76									
11	9							0.76	69.78	69.10	35	0.020	15"	9.1	4.5	7.8	
9	8				0.686	20.5	4.6	3.16	69.00	66.80	203	0.0108	15"	6.7	5.4	37.6	
AREA D	8	1.50	0.35	0.525		20	4.6	2.42									
8	7				1.211	21	4.5	5.45	66.70	59.84	182	0.0377	15"	12.5	9.9	18.4	
AREA E	7	0.10	0.70	0.070		5	7.0	0.49									
7	13				1.281	21	4.5	5.76	59.74	59.04	35	0.020	15"	9.1	7.9	4.4	
AREA F	12	0.65	0.35	0.225													
12	13				1.509	21.5	4.5	6.79	57.50	53.00	160	0.0263	15"	10.5	9.4	17	
13	E							6.79	50.50	30.50	145	0.1379	15"	27.0	16.8	8.6	EXIST MIL BMP2
AREA G	6	0.20	0.70	0.140		5	7.0	0.98									
6	5				0.140	5	7.0	0.98	54.30	53.70	30	0.0200	15"	9.1	4.9	6.1	
AREA H	5	0.50	0.35	0.175		7	5.7	1.00									
5	4				0.315	7	5.7	1.80	53.60	50.00	105	0.0343	15"	11.9	7.0	15	

REVISED 8/20/93

STORM SEWER DESIGN COMPUTATIONS

L & D 229

ROUTE _____ PROJ. SETTLERS MILL SEC 3
COUNTY James City DISTRICT 93047
DESCRIPTION STORM ROAD "A" CONT.
SHEET 2 OF ____

FROM POINT	TO POINT	AREA DRAIN. "A" ACRES	RUN-OFF COEF. C	CA INCRE-MENT	CA ACCUM-ULATED	INLET TIME MIN-UTES	RAIN FALL IN./HR.	RUNOFF Q C.F.S.	INVERT ELEVATIONS UPPER END	INVERT ELEVATIONS LOWER END	LENGTH FT.	SLOPE FT./FT.	DIA. IN.	CAPA-CITY C.F.S.	VEL. F.P.S.	FLOW TIME SEC.	REMARKS
(1)	(2)	(3)	(4)	(5)	(6)	(7)	(8)	(9)	(10)	(11)	(12)	(13)	(14)	(15)	(16)	(17)	(18)
AREA I	4	0.33	0.50	0.165		5	7	1.16									
4	3				0.480	8	6.5	3.12	49.90	47.30	130	0.020	15"	9.1	6.7	19.4	
AREA J	3	0.50	0.35	0.175													
AREA K	3	0.50	0.35	0.175	0.35	10	6.0	2.10									
3	2				0.83	8	6.5	5.40	47.20	45.80	35	0.0400	15"	12.9	10.0	3.5	
AREA L	2	0.50	0.35	0.175													
AREA M	2	0.13	0.75	0.098	0.272	15	5.3	1.44									
2	1				1.102	8	6.5	7.16	43.00	27.00	186	0.086	15	18.9	14.9		

REVISED 8/20/93

STORM SEWER DESIGN COMPUTATIONS

L & D 229

ROUTE: _____ PROJ. SETTLERS MILL SEC 3
COUNTY James City DISTRICT 93047
DESCRIPTION _____

SHEET 3 OF 4

FROM POINT	TO POINT	AREA DRAIN. "A" ACRES	RUN-OFF COEF. C	CA INCRE-MENT	CA ACCUM-ULATED	INLET TIME MIN-UTES	RAIN FALL IN./HR.	RUNOFF Q C.F.S.	INVERT ELEVATIONS UPPER END	INVERT ELEVATIONS LOWER END	LENGTH FT.	SLOPE FT./FT.	DIA. IN.	CAPA-CITY C.F.S.	VEL. F.P.S.	FLOW TIME SEC.	REMARKS
(1)	(2)	(3)	(4)	(5)	(6)	(7)	(8)	(9)	(10)	(11)	(12)	(13)	(14)	(15)	(16)	(17)	(18)
AREA N	20	0.18	0.7	0.126		5	7.0	0.882									
20	19							0.882	62.32	61.76	30	0.020	15"	9.1	4.7	6.4	
AREA O	19	0.18	0.7	0.126		5	7.0	0.882									
19	18				0.252	5	7.0	1.76	61.66	59.66	80	0.0263	15"	10.5	7.0	11.4	
AREA P	18	0.24	0.35	0.084		10	6.0	0.50									
18	17				0.336	5	7.0	2.35	59.56	56.70	130	0.0220	15"	9.5	7.3	17.8	
AREA Q	17	0.42	0.35	0.147		10	6.0	0.882									
AREA R	21	1.28	0.35	0.448		20	4.6	2.06									
21	17				0.448	20	4.6	2.06	57.28	56.70	72	0.0080	15'	5.8	4.3	16.7	
AREA S	17	0.50	0.35	0.175		15	5.3	0.93									
17	16				0.770	5	7.0	5.39	56.60	55.90	35	0.020	15"	9.1	7.8	4.5	
AREA T	16	0.14	0.7	0.098													
AREA U	16	0.17	0.7	0.119													
16	15				0.987	5	7.0	6.91	53.70	28.00	230	0.1115	15"	18.2	15.5	14.8	

REVISED 8/20/93

STORM SEWER DESIGN COMPUTATIONS

L & D 229

COUNTY James City DISTRICT

DESCRIPTION

SHEET 4 OF 4

FROM POINT	TO POINT	AREA DRAIN. "A" ACRES	RUN-OFF COEF. C	CA INCRE-MENT	CA ACCUM-ULATED	INLET TIME MIN-UTES	RAIN FALL IN./HR.	RUNOFF Q C.F.S.	INVERT ELEVATIONS UPPER END	INVERT ELEVATIONS LOWER END	LENGTH FT.	SLOPE FT./FT.	DIA. IN.	CAPA-CITY C.F.S.	VEL. F.P.S.	FLOW TIME SEC.	REMARKS
(1)	(2)	(3)	(4)	(5)	(6)	(7)	(8)	(9)	(10)	(11)	(12)	(13)	(14)	(15)	(16)	(17)	(18)
AREA V	24	0.34	0.35	0.119													
AREA W	24	0.32	0.35	0.112													
24	23				0.231	5	7.0	1.62									FUTURE
AREA X	23	0.16	0.70	0.112													
AREA Y	23	0.16	0.70	0.112													
23	22				0.455	5	7.0	3.19									FUTURE
AREA AA	27	0.11	0.7	0.077													
AREA BB	27	0.50	0.35	0.175													
27	26				2.52	5	7.0	1.64	51.40	37.5	99	0.1010	15"	20.5	10.0	9.9	
26	25							1.64	30.0	20.5	94	0.1404	15"	24.2	11.2	8.4	ADD EG-1 TO END OF PIPE

REVISED 8/20/93

HYDRAULIC GRADE LINE PROJECT

INLET STATION	Outlet Water Surface Elev.	D_o	Q_o	L_o	S_{f_o} %	H_f	JUNCTION LOSS												Final H	Inlet Water Surface Elev.	Rim Elev.
							V_o	H_o	Q_i	V_i	Q_iV_i	$\frac{V_i^2}{2g}$	H_i	Angle	H_Δ	H_t	$1.3\,H_t$	$0.5\,H_t$			
(1)	(2)	(3)	(4)	(5)	(6)	(7)	(8)	(9)	(10)	(11)	(12)		(13)	(14)	(15)	(16)	(17)	(18)	(19)	(20)	(21)
2	28.5	15"	7.16	186	0.086	16.0	14.4	0.80	5.40	10.0	54.0	1.55	0.54	0	0.0	1.34		0.67	16.67	45.17	52.10
3	46.80	15"	5.40	35	0.040	1.4	10.0	0.39	3.12	6.7	20.9	0.70	0.24	90°	0.49	1.12		0.56	1.96	48.76	52.10
4	48.76	15"	3.12	130	0.020	2.6	6.7	0.18	1.80	7.0	12.6	0.76	0.27	20°	0.12	0.57		0.28	2.88	51.65	53.92
5	51.65	15"	1.80	105	0.034	3.6	7.0	0.19	.98	4.9	4.8	0.37	0.13	20°	0.06	0.37		0.19	3.79	55.44	58.30
6	55.44	15"	.98	30	0.02	0.62	4.9	0.09	0	0	0	0	0	0	0	0.09		0.05	0.67	56.11	58.30
13	31.5	15"	6.79	145	.1379	20.0	16.8	1.09	6.79	9.4	63.8	1.37	0.48	80°	0.90	2.47		1.23	21.24	52.74	59.00
12	54.0	15"	6.79	160	0.0263	4.2	9.4	0.34	5.76	7.9	45.5	0.97	0.34	0	0	0.68		0.34	4.54	58.54	64.50
7	60.04	15"	5.76	35	0.020	0.7	7.9	0.24	5.45	9.9		1.76	0.61	90°	0.43	1.28		0.64	1.34	61.38	64.50
8	61.38	15"	5.45	182	0.0577	6.86	9.9	0.44	3.16	5.4		0.45	0.15	15°	0.05	0.64		0.30	7.19	68.57	70.94
9	68.57	15"	3.16	203	0.0108	2.19	5.4	0.11	0.93	4.3		0.29	0.10	15°	0.03	0.24		0.12	2.31	70.88	73.67
9	68.57	15"	3.16	203	0.0108	2.19	5.4	0.11	0.76	4.5		0.31	0.11	90°	0.22	0.44		0.22	2.41	70.98	73.67
10	70.98	15"	4.3	120	0.015	1.8	4.3	0.07	0	0	0	0	0	0	0	0.07		0.04	1.84	72.82	74.90

$H_i = 0.35\frac{V_i^2}{2g}$ $H_o = 0.25\frac{V_o^2}{2g}$ $H_\Delta = K\frac{V_i^2}{2g}$ FINAL $H = H_f + H_t$

$H_t = H_o + H_i + H_\Delta$

SEE LD-72(D)67

90° K = 0.70	50° K = 0.47	20° K = 0.16
80° K = 0.66	40° K = 0.38	15° K = 0.10
70° K = 0.61	30° K = 0.28	
60° K = 0.55	25° K = 0.22	

HYDRAULIC GRADE LINE PROJECT

INLET STATION	Outlet Water Surface Elev.	D_o	Q_o	L_o	S_{f_o} %	H_f	JUNCTION LOSS												Final H	Inlet Water Surface Elev.	Rim Elev.
							V_o	H_o	Q_i	V_i	Q_iV_i	$\frac{V_i^2}{2g}$	H_i	Angle	H_Δ	H_t	$1.3\ H_t$	$0.5\ H_t$			
(1)	(2)	(3)	(4)	(5)	(6)	(7)	(8)	(9)	(10)	(11)	(12)		(13)	(14)	(15)	(16)	(17)	(18)	(19)	(20)	(21)
16	39.0	15"	6.91	230	0.1115	25.64	15.5	0.93	5.39	7.8	42.0	0.94	0.33	0	0	1.26		0.63	26.27	55.27	60.70
17	56.9	15"	5.39	35	0.02	0.7	7.8	0.23	2.06	4.3		0.29	0.10	90	0.20	0.53		0.27	0.97		21
									2.35	7.3		0.82	0.29	90	0.57	1.09		0.55	1.25	58.15	60.70 16
18	58.15	15"	2.35	130	0.022	2.86	7.3	0.21	1.76	7.0		0.76	0.27	20	0.12	0.60		0.30	3.16	61.31	63.86
19	61.31	15"	1.76	80	0.0263	2.10	7.0	0.19	0.88	4.7		0.34	0.12	20	0.05	0.36		0.18	2.28	63.59	66.69
20	63.59	15"	0.88	30	0.02	0.6	4.7	0.09	0	0		0	0	0	0	0.09		0.05	0.65	64.24	66.69
21	58.15	15"	2.06	72	0.008	0.58	4.3	0.07	0	0		0	0	0	0	0.07		0.04	0.62	58.77	61.64
26	21.5	15"	1.64	94	0.1404	13.20	11.2	0.49	1.64	10.0		1.55	0.54	50	0.78	1.76		0.88	14.08	35.58	41.50
27	38.5	15"	1.64	99	0.101	1.00	10.0	0.39	0	0		0	0	0	0	0.39		0.19	1.19	39.69	55.38

$H_i = 0.35 \frac{V_i^2}{2g}$ $H_o = 0.25 \frac{V_o^2}{2g}$ $H_\Delta = K \frac{V_i^2}{2g}$ FINAL $H = H_f + H_t$

$H_t = H_o + H_i + H_\Delta$

SEE LD-72(D)67

90° K = 0.70	50° K = 0.47	20° K = 0.16
80° K = 0.66	40° K = 0.38	15° K = 0.10
70° K = 0.61	30° K = 0.28	
60° K = 0.55	25° K = 0.22	

4-73

File 93047

SETTLERS MILL
OVERALL

SEC 3
MC016

TABLE 3

WORKSHEET FOR BMP POINT SYSTEM

A. STRUCTURAL BMP POINT ALLOCATION

BMP	BMP Points		Fraction of Site Served by BMP		Weighted BMP Points	
1, 3 & 4*	9	x	$\frac{54.36}{105}$ = 51.77%	=	4.66	
2	8	x	$\frac{13.57}{105}$ = 12.92%	=	1.03	
5	6	x	$\frac{16.7}{105}$ = 15.90%	=	0.95	
5	6 WORST CASE	x	$\frac{9.7+6.4}{105}$ = 15.33%	=	0.92	OFFSITE TO BMPS

TOTAL WEIGHTED STRUCTURAL BMP POINTS: 7.56

B. NATURAL OPEN SPACE CREDIT

Fraction of Site		Natural Open Space Credit		Points for Natural Open Space
$\frac{27.6 Ac}{105}$ 26.28%	x	(0.1 per 1%)	=	2.63

C. TOTAL WEIGHTED POINTS

7.56	+	2.63	=	10.19
Structural BMP Points		**Natural Open Space Points**		**TOTAL**

NEED ONLY 24.40% TO ACQUIRE 10 POINTS

* BMP's 3 & 4 ARE COMBINED

TOTAL AREA OF DEVELOPMENT — 105 AC

TOTAL ACERAGE TO BMP's 1, 3 & 4 — 54.36 Ac

TOTAL ACERAGE TO BMP 2 — 13.57 Ac

TOTAL ACERAGE TO BMP 5 — 16.70 Ac

ONSITE — 9.70 Ac

OFFSITE NOW — 6.40 Ac } 16.1

OFFSITE IF CULVERT ADDED UNDER HICKORY SIGNPOST RD

TOTAL NATURAL OPEN SPACE INCLUDING CONSERVATION EASEMENT — 27.60 Ac.

REVISED JAN 31, 1994

93047

SETTLERS MILL
OVERALL

TABLE 3

WORKSHEET FOR BMP POINT SYSTEM

A. STRUCTURAL BMP POINT ALLOCATION

BMP	BMP Points		Fraction of Site Served by BMP		Weighted BMP Points	
1, 3 & 4*	9	x	$\frac{54.36}{105}$ = 51.77%	=	4.66	
2	8	x	$\frac{13.57}{105}$ = 12.92%	=	1.03	
5	9	x	$\frac{16.7}{105}$ = 15.9%	=	1.43	
5	9	x	$\frac{9.7}{105}$ = 9.24%	=	.83	OFFSITE TO BMPS

TOTAL WEIGHTED STRUCTURAL BMP POINTS: 7.95

B. NATURAL OPEN SPACE CREDIT

Fraction of Site		Natural Open Space Credit		Points for Natural Open Space
$\frac{27.6 Ac}{105}$	26.28% x	(0.1 per 1%)	=	2.63

C. TOTAL WEIGHTED POINTS

7.95	+	2.63	=	10.58
Structural BMP Points		Natural Open Space Points		TOTAL

NEED ONLY 20.5% TO ACQUIRE 10 POINTS

* BMP's 3 & 4 ARE COMBINED

TOTAL AREA OF DEVELOPMENT — 105 AC

TOTAL ACERAGE TO BMP's 1, 3 & 4 — 54.36 Ac
TOTAL ACERAGE TO BMP 2 — 13.57 Ac
TOTAL ACERAGE TO BMP 5 — 16.70 Ac ONSITE, 9.70 Ac OFFSITE

TOTAL NATURAL OPEN SPACE INCLUDING CONSERVATION EASEMENT — 27.60 Ac.

SETTLERS MILL @ JAMES MILL
SECTION III

SEC 3
MC 013

JHB 3/23/88
1/4

DAM # II

PRE-DEVELOPMENT

Pre dev = 1.2 hr
RCN = 68
Peak Q_2 = 18
Q_{10} = 47
Q_{100} = 105

DRAINAGE AREA = 54.15 ACRES
c = 0.25 WOODLANDS
LENGTH OF CHANNEL = 1600'

Δ ELEVATION = 66 - 24 = 42'
S = 42/1600 = 2.63%
t_c = 9 MINUTES (FIG. 1.5.1.2)

OVERLAND FLOW, LENGTH = 200', SLOPE 2%, c = 0.25
t_c = 19 MINUTES (FIG. 1.5.1.1)

TOTAL t_c = 9 + 19 = 28 MINUTES. USE 25 MINUTES.

I_2 = 3.0 IN/HR — Q_2 = (0.25)(3.0)(54.15) = 40.6 CFS — MAX. DESIRABLE RELEASE RATE
I_{10} = 4.0 IN/HR — Q_{10} = (0.25)(4.0)(54.15) = 54.2 CFS
I_{100} = 5.8 IN/HR — Q_{100} = (1.25)(0.25)(5.8)(54.15) = 98.1 CFS

POST-DEVELOPMENT

DRAINAGE AREA = 54.15 ACRES
c = 0.40 RESIDENTIAL GROSS LOT SIZE = 1/2 ACRE

Post
T_c = 0.41 hr
RCN = 78

LENGTH OF CHANNEL = 1600'
APPROXIMATELY 50% OF CHANNEL IMPROVED TO PAVED DITCH
DIVIDE INTO 2 PARTS, (FIG. 1.5.1.2)

GRASS — 800', 21' Δ ELEVATION — t_c = 5.5 MINUTES

PAVED — 800', 21' Δ ELEVATION — t_c = (5.5)(0.2) = 1.1 MINUTES
t_c = 6.6 MINUTES

OVERLAND FLOW, LENGTH = 200', SLOPE = 2%, c = 0.325 (AVG. GRASS)
t_c = 16.8 MINUTES

TOTAL t_c = 6.6 + 16.8 = 23.4 MIN. USE 22.5 MINUTES

Q_2 = 65 1.4
Q_{10} = 134 2.7
Q_{100} = 251 5.1

I_2 = 3.3 IN/HR — Q_2 = (0.40)(3.3)(54.15) = 71.5 CFS
I_{10} = 4.3 IN/HR — Q_{10} = (0.40)(4.3)(54.15) = 93.1 CFS
I_{100} = 6.3 IN/HR — Q_{100} = (1.25)(0.40)(6.3)(54.15) = 170.6 CFS

Vol = 2.5 acft. — Q_2 = 65 → 18 cfs

SETTLERS' MILL AT JAMESTOWN
J.N. 7061
3/23/88

ANTI - SEEP COLLAR PLACEMENT

DETERMINE LENGTH OF BARREL IS SATURATED ZONE (L_s)

$$L_s = Y(Z+4)\left(1 + \frac{S}{0.25 - S}\right)$$

Y = DEPTH OF WATER AT PRINCIPAL SPILLWAY = 14'
Z = SLOPE OF UPSTREAM FACE IN Z FEET TO 1' VERTICAL = 3
S = SLOPE OF BARREL IN FEET / FOOT = 0.0054

$$L_s = 14(7)\left(1 + \frac{0.0054}{0.25 - 0.0054}\right) = 100$$

USING 4 COLLARS EACH SHOULD BE 4.5' IN DIAMETER
WITH SPACING OF $14 \times ((4.5 - 2)/2) = 14 \times 1.25 = 17.5'$

WITH CONSIDERATION OF PIPE LENGTHS, USE 4.5' DIAMETER COLLARS WITH 16' SPACING

SMSEC3.DAT
48" Riser - 24" BARREL

2 YR ROUTING, 24 hour
Q_{in} = 41 cfs
Q_{OUT} = 12 cfs
Peak Ele — 25.4'
Volume - 2.4 acft.

10 YR ROUTING
Q_{in} = 78.1
Q_{OUT} = 24.7 cfs
Peak elev - 26.5
Vol. = 4.9 ac ft.

100 yr ROUTING
Q_{in} = 142
Q_{OUT} = 43 cfs
Peak elev = 28.1
Vol = 9.4 acft.

2 YR, 6 Hour
Q_{in} = 48 cfs
Q_{OUT} = 10.3 cfs
Peak elev = 25.3'
Vol = 2.0

SETTLERS MILL

JHB 3/23/88

2/4

DESIRABLE
RELEASE RATE = 40.0 CFS BELOW OVERFLOW GRATE

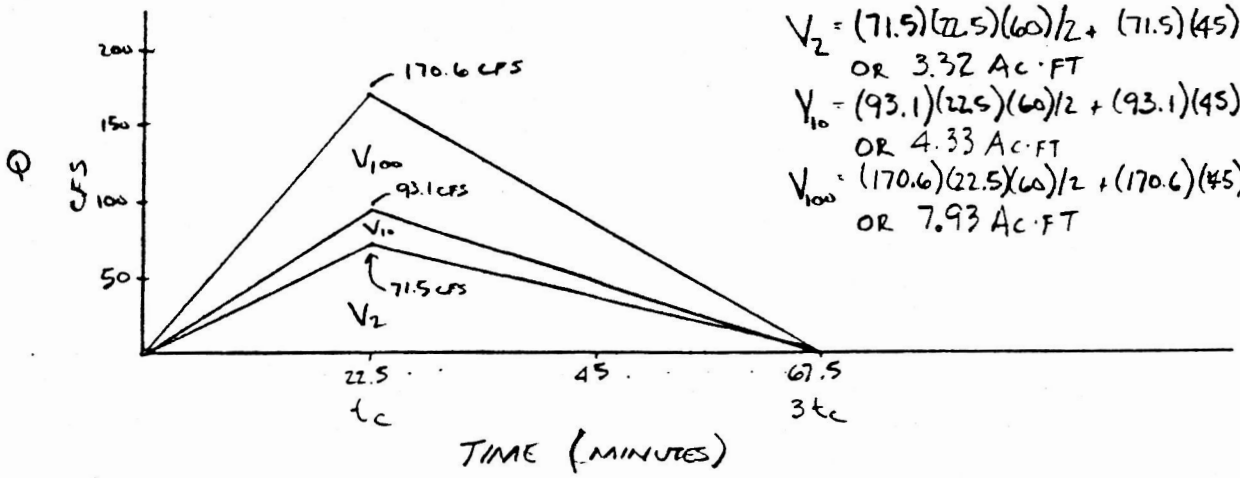

$V_2 = (71.5)(22.5)(60)/2 + (71.5)(45)(60)/2 = 144{,}788$ CF
OR 3.32 AC·FT

$V_{10} = (93.1)(22.5)(60)/2 + (93.1)(45)(60)/2 = 188{,}528$ CF
OR 4.33 AC·FT

$V_{100} = (170.6)(22.5)(60)/2 + (170.6)(45)(60)/2 = 345{,}465$ CF
OR 7.93 AC·FT

ULTIMATE REQUIRED SEDIMENT STORAGE = (54.15 AC)(67 CY/AC) = 3628 CY OR 2.25 AC·FT

	ELEV	
• SEDIMENT STORAGE OF 2.25 AC·FT	120 – 19.2	DEPTH = 7.2'
• PERMANENT RETENTION	19.2 – 24.5	VOL. = 368,789 CF

OUTLET STRUCTURE

USE PRECAST STRUCTURE WITH RECTANGULAR WEIR

WEIR EQUATION $Q = 3.0(L - 0.2H)H^{3/2}$ DESIRE L = 3.93' H = 1.0'

h = 0.5	EL = 25.0	Q = 4.06 CFS
h = 1.0'	EL = 25.5	Q = 11.2 CFS
h = 1.5'	EL = 26.0	Q = 20.0 CFS
h = 2.0'	EL = 26.5	Q = 30.0 CFS

ORIFICE EQUATION $Q = 0.6A\sqrt{2gh}$ g = 32.2 h = VARIES A = 3.93 SF

h = 0.5'	EL = 25.0	Q = 13.7 CFS	WEIR CONTROLS
h = 1.0'	EL = 25.5	Q = 18.9 CFS	" "
h = 1.5'	EL = 26.0	Q = 23.2 CFS	" "
h = 2.0'	EL = 26.5	Q = 26.8 CFS	ORIFICE CONTROLS
h = 2.5'	EL = 27.0	Q = 29.9 CFS	" "
h = 3.0'	EL = 27.5	Q = 32.8 CFS	" "
h = 4.0'	EL = 28.5	Q = 37.8 CFS	" "

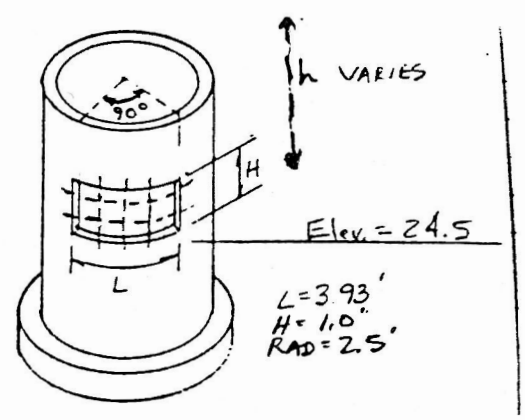

SETTLERS MILL

JHC 3/23/88
3/4

AVAILABLE POND STORAGE

AT ELEV = 24.5	V_{POND} = 0 CF			✓
ELEV = 25.5	V_{POND} = 103,002 CF	OR	2.36 AC·FT	
ELEV = 26.5	V_{POND} = 218,250 CF	OR	5.01 AC·FT	✓
ELEV = 27.3	V_{POND} = 320,247 CF	OR	7.35 AC·FT	
ELEV = 28.3	V_{POND} = 447,743 CF	OR	10.28 AC·FT	✓
30.3			16.2 ACFT	

MAXIMUM WATER HEIGHTS (ASSUMES NO OUTFLOW - ALL STORED)

V_2 = 3.32 AC·FT

2.36	25.5		
3.32	X	X = 25.86	D_2
5.01	26.5		

V_{10} = 4.33 AC·FT

2.36	25.5		
4.33	X	X = 26.24	D_{10}
5.01	26.5		

V_{100} = 7.93 AC·FT

7.35	27.3		
7.93	X	X = 27.50	D_{100}
10.28	28.3		

ACTUAL ELEVATIONS WILL BE LOWER SINCE THE PRINCIPAL SPILLWAY IS PASSING A PORTION OF THE RUNOFF ENTERING THE POND.

DESIGN OUTLET STRUCTURE TO PASS RUNOFF THAT ORIFICE/WEIR AND OVERFLOW GRATE PASSES. ASSUME WORST CONDITION — OUTLET SUBMERGED
TRY 24" RCP

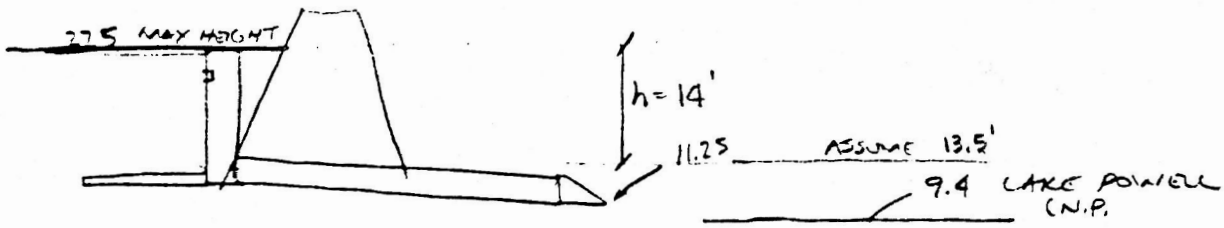

$$V = \sqrt{\frac{h}{\frac{(1+K_e)}{2g} + \frac{n^2 L}{(2.21)(r_H)^{4/3}}}}$$

h = 14' L = 92'
K_e = 0.50 n = 0.013
r_H = 2/4 = ½ g = 32.2

V = 18.47 FPS 16.85

Q = V·A = (18.47)(π) = 58.0 CFS ORIFICE/WEIR PASSES 32.8 CFS

DESIGN GRATE THAT PASSES APPROXIMATELY 25 CFS. TRY DI-7, L = 3.5, W = 3.0'
CHART 14 IN VDOT DRAINAGE MANUAL

DI-7 PASSES 25 CFS AT DEPTH = 0.75'. THEREFORE IF NO CLOGGING OCCURS, SYSTEM WILL BE FULL AT ELEVATION 28.05. THIS SHOULD NOT OCCUR EXCEPT DURING A GREATER THAN 100 YEAR STORM EVENT.

DAM #2 IS DESIGNED TO DETAIN ALL RUNOFF IN EXCESS OF THE PRE-DEVELOPMENT 2 YEAR STORM AND RELEASE THE RUNOFF AT PRE-DEVELOPMENT 2 YEAR OR LESS LEVELS. ONLY IF THE STORM EVENT EXCEEDS THE 100 YEAR EVENT, OR IF THE SLOT INLET CLOGS WILL THE OUTFALL PIPE PASS MORE THAN THE Q_2 PRE STORM. THE INCREASE, IF THIS OCCURS IS MINOR (ONLY 56 CFS VS. 40 CFS). AS STATED BEFORE, THE 100-YEAR STORM WILL BE CONTAINED MAKING AN EMERGENCY SPILLWAY NOT NECESSARY. HOWEVER, IT IS THE PRUDENT THING TO DO. THE EMERGENCY SPILLWAY WILL FUNCTION IN THE EVENT OF A MUCH GREATER THAN 100 YEAR EVENT OR IF THE PRINCIPAL SPILLWAY BECOMES BADLY CLOGGED AND THERE ARE BACK TO BACK MAJOR STORM EVENTS. (REMEMBER, THE 100-YEAR EVENT IS STORED ALMOST 1.0' BELOW THE EMERGENCY SPILLWAY.) PROVIDE A 20' WIDE EMERGENCY SPILLWAY CONTROL SECTION PROVIDED AT ELEVATION 28.3. ALLOW 2.0' MORE TO TOP OF DAM FOR FREEBOARD AND CONSTRUCTION TOLERANCE. TOP OF DAM = 30.3.

BUOYANCY CALCULATIONS FOR PRINCIPAL SPILLWAY

DETERMINE VOLUME AND WEIGHT OF STRUCTURE

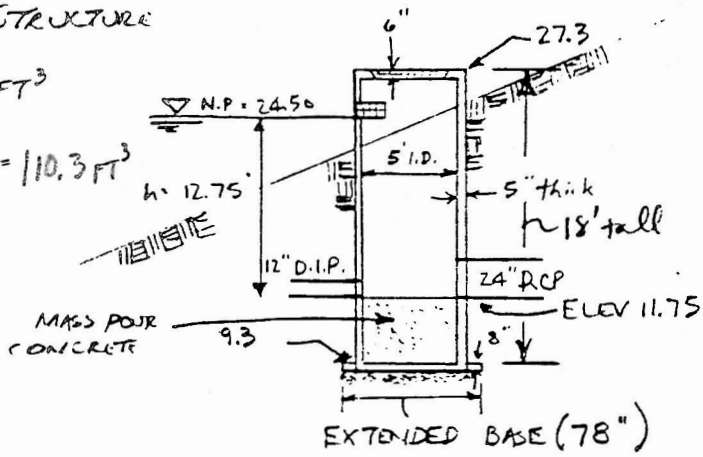

$V_{RISER\ INSIDE} = \pi(r/2)^2 h = \pi(5/2)^2(12.75) = 250.3\ FT^3$

$V_{RISER\ WALLS} = \pi(r_o/2)^2 h - \pi(r_i/2)^2 h = \pi(15.55)\left[\left(\frac{5.83}{2}\right)^2 - \left(\frac{5}{2}\right)^2\right] = 110.3\ FT^3$

$V_{TOP} = \pi(R_o/2)^2 d = \pi(5.83/2)^2(0.50) = 13.4\ FT^3$

$V_{BASE} = \pi(R_o/2)^2 d = \pi(6.5/2)^2(.67) = 22.1\ FT^3$
BASE DIAMETER = 78" OR 6.5'

WEIGHT TO THIS POINT $w_{conc} = 150\ \#/CF$

$w_{partial} = (110.3 + 13.4 + 22.1)(150) = \underline{21{,}870\ \#}$

WEIGHT OF H_2O DISPLACED BY AIR $w_{H_2O} = 62.4\ \#/CF$

$w_{H_2O} = (250.3)(62.4) = \underline{15{,}619\ \#}$

$w_{conc} > w_{H_2O}$ ∴ STRUCTURE WILL NOT FLOAT

WEIGHT OF ADDITIONAL DEPTH AND MASS POUR $\pi\left(\frac{5.83}{2}\right)^2(2.45)\,150 = 9{,}821\ \#$

$31{,}691 \times \frac{87.6}{150} = 18{,}507$

18,000
SOIL - 6000 lbs
24,000 > FS = 1.5

$w_{conc\ TOTAL} = 21{,}870 + 9{,}821 = \underline{31{,}691\ \#} >> w_{H_2O} = \underline{15{,}619\ \#}$ > 1.2 FS

WILL NOT FLOAT

SEC 3 MC016 CC

DRAINAGE, STORMWATER MANAGEMENT, AND EROSION CONTROL DESIGN

The Drainage, Stormwater Management, and Erosion Control facilities for Section 3 of Settlers Mill have been developed in basic conformance with the "Overall Drainage and Stormwater Management Plan" developed by AES Consulting Engineers of Williamsburg, Virginia as shown on their plans of Section 2 of Settlers Mill. We have, however, combined Pond #3 and Pond #4 shown on Sheet 2 of the AES plans, dated 2/91. Both Pond #3 and Pond #4 are wet ponds and are called for to be 9 point BMP's. We have designed the combined pond as a 9 point BMP using 4 times the volume required by the Chesapeake Bay Preservation Act. The design volume required is as follows:

Required Volume of BMP 3 & 4 Combined

$$V_r = \frac{(R_m)(R_v)}{12} \times Ac.$$

Subdivision

$R_v = (0.05 + 0.009I) = [0.05 + 0.009(22.6)] = 0.253$
(Where I = 22.6% from CBLAM Sheet C-10, attached)

$R_m = 0.45"$

Ac. = 45.48 Acres

$$V_r = \frac{(0.45)(0.253)}{12} \times 45.48 = 0.431 \text{ ac.-ft.} = 18{,}779 \text{ cu. ft.}$$

Community Recreation Center

$R_v = (0.05 + 0.009I) = [0.05 + 0.009(49.5)] = 0.4955$

(Where $I = \frac{\text{Impermeable Area}}{\text{Total Site}} = \frac{1.26}{2.52} = 49.5\%$

$R_m = 0.45"$

Ac. = 2.52 Acres

$$V_r = \frac{(0.45)(0.496)}{12} \times 2.52 = 0.047 \text{ ac.-ft.} = 2{,}043 \text{ cu. ft.}$$

V_r Total = 18,779 + 2,043 = 20,822 cu. ft. or 0.478 ac.-ft.

A 9 Point BMP wet pond requires 4 x V_r normal storage.

V_r x 4 = 0.478 ac.-ft. x 4 = 1.91 ac.-ft. = 83,289 cu. ft. < 85,226 initial storage in pond

The BMP pond was designed using the Modified Rational Method and run on Haestad Methods Inc.'s Quick TR-55 and Pond-2 software. Intensity, Duration, and Frequency Curve data used was taken from the VDOT Drainage Manual for Norfolk (Rev. 6/92).

The BMP pond will be used as a sediment basin during construction. The total contributing acreage to BMP 3 & 4 combined is 48 acres. Thus, the required sediment trap volume is 3.98 Ac.-ft. For the 25-year storm frequency, the pond provides 1.96 ac.-ft. of wet storage volume and 3.23 ac. ft. of dry storage volume for a total storage volume of 5.19 ac.-ft.

7/29/93

Settlers Mill Sect III

1. BMP Plan -

Overall plan by AES has

a) DA = 13.57 for Pond 2 - existing
the L+M plan for Sect III has ≤ the drainage area assumed in the overall BMP Plan

b) Ponds 3+4 - 9PT BMPs
AES Plan assumed DA: 10.62
37.38
48.00 ac

L+M plan provides DA = 48 ac - ok

SEC 3 MC016

SETTLERS MILL, SEC 3
J.N. 7061 7/26/08

REDESIGN OF PRINCIPAL SPILLWAY FOR DAM # 2

EXERCISE

- PRINCIPAL SPILLWAY MUST PASS A MINIMUM OF 0.2 CFS/ACRE OF DRAINAGE AREA

  DRAINAGE AREA = 54.15 AC

  $Q_p = 0.2 \times 54.15 = 10.8$ CFS = PEAK MINIMUM RUNOFF

  DESIRABLE MAXIMUM RELEASE RATE = 40.6 CFS

- AN EMERGENCY SPILLWAY WILL BE PROVIDED.
- DIFFERENCE BETWEEN ELEVATION OF THE CREST OF PRINCIPAL SPILLWAY AND THE ELEVATION OF CREST OF EMERGENCY SPILLWAY

  EL. OF EMERGENCY SPILLWAY = 28.3

  EL. OF PRINCIPAL SPILLWAY = 24.5

  $h = 3.8'$

✳ AS REQUESTED BY JAMES CITY COUNTY PUBLIC WORKS, A 48"Ø RISER AT ELEVATION 24.5 WILL BE USED.

WITH $h = 3.8'$ AND USING THE 48"Ø RISER THE RISER WILL PASS 120 CFS IN ORIFICE FLOW (VA E&S PLATE 1.26h)

START → SIZING OUTLET BARREL TO CONTROL FLOW THROUGH PRINCIPAL SPILLWAY

- DIFFERENCE BETWEEN ELEVATION OF CENTERLINE OF OUTLET OF BARREL THROUGH EMBANKMENT AND CREST OF EMERGENCY SPILLWAY

  EL. OF EMERGENCY SPILLWAY = 28.3

  EL. OF CENTERLINE OF OUTLET = 12.25

  $H = 16.05$

LENGTH OF BARREL THRU EMBANKMENT = 92'

USING TABLE 1.26b OF VA. SEDIMENT & EROSION CONTROL HANDBOOK $H = 16$, $L = 70$ → $Q_p = 47.1$ CFS for 70' of 21" RCP

FOR $L = 90$ USE CORRECTION FACTOR = .95

$\Rightarrow Q_p = 47.1 \times .95 = 44.7$ CFS THRU 92' OF 21" RCP

CLOSE ENOUGH! ± 10%

SETTLERS MILL, SECTION 3

J.N. 7061 7/27/88

BUOYANCY CALCULATIONS FOR REDESIGNED PRINCIPAL SPILLWAY

DETERMINE VOLUME AND WEIGHT OF STRUCTURE

$V_{RISER\ INSIDE} = \pi (r/2)^2 h = \pi (4/2)^2 (24.5 - 11.75) = 160.2\ FT^3$

$V_{RISER\ WALLS} = \pi (r/2)^2 h - \pi (r_i/2)^2 h$

$= \pi (24.5 - 11.75) \left[\left(\frac{4.42}{2}\right)^2 - \left(\frac{4}{2}\right)^2 \right]$

$= \pi (12.75)(0.88) = 35.2\ FT^3$

$V_{BASE} = \pi (R_o/2)^2 h = \pi (6.125/2)^2 (.67) = 19.7\ FT^3$

WEIGHT OF RISER, BASE & ANTI VORTEX CAP $\quad N_{CONC} = 150\#/CF$

$W_{PARTIAL} = (35.2 + 19.7) \times (150) + W_{CAP}$

$= (54.9)(150) + 7307\#$

$= 8235 + 7307 = 15{,}542\# = W_{CONC}$

WEIGHT OF H_2O DISPLACED BY AIR $\quad W_{H_2O} = 62.4\#/CF$

$W_{H_2O} = (160.2)(62.4) = 9996\#$

$W_{CONC} > W_{H_2O} \Rightarrow$ STRUCTURE WILL NOT FLOAT

setmil3.dat

$Q_{2pre} = 13.8$	$Q_{2post} = 40.3$ cfs	$Q_{OUT} = 10.8$	Elev = 25.5'
$Q_{10\ pre} = 36.5$	$Q_{10\ post} = 78.4$ cfs	$Q_{OUT} = 24.2$ cfs	Elev = 26.5
$Q_{100\ pre} = 79$	$Q_{100\ post} = 141$	$Q_{OUT} = 55.9$ cfs	Elev = 28.

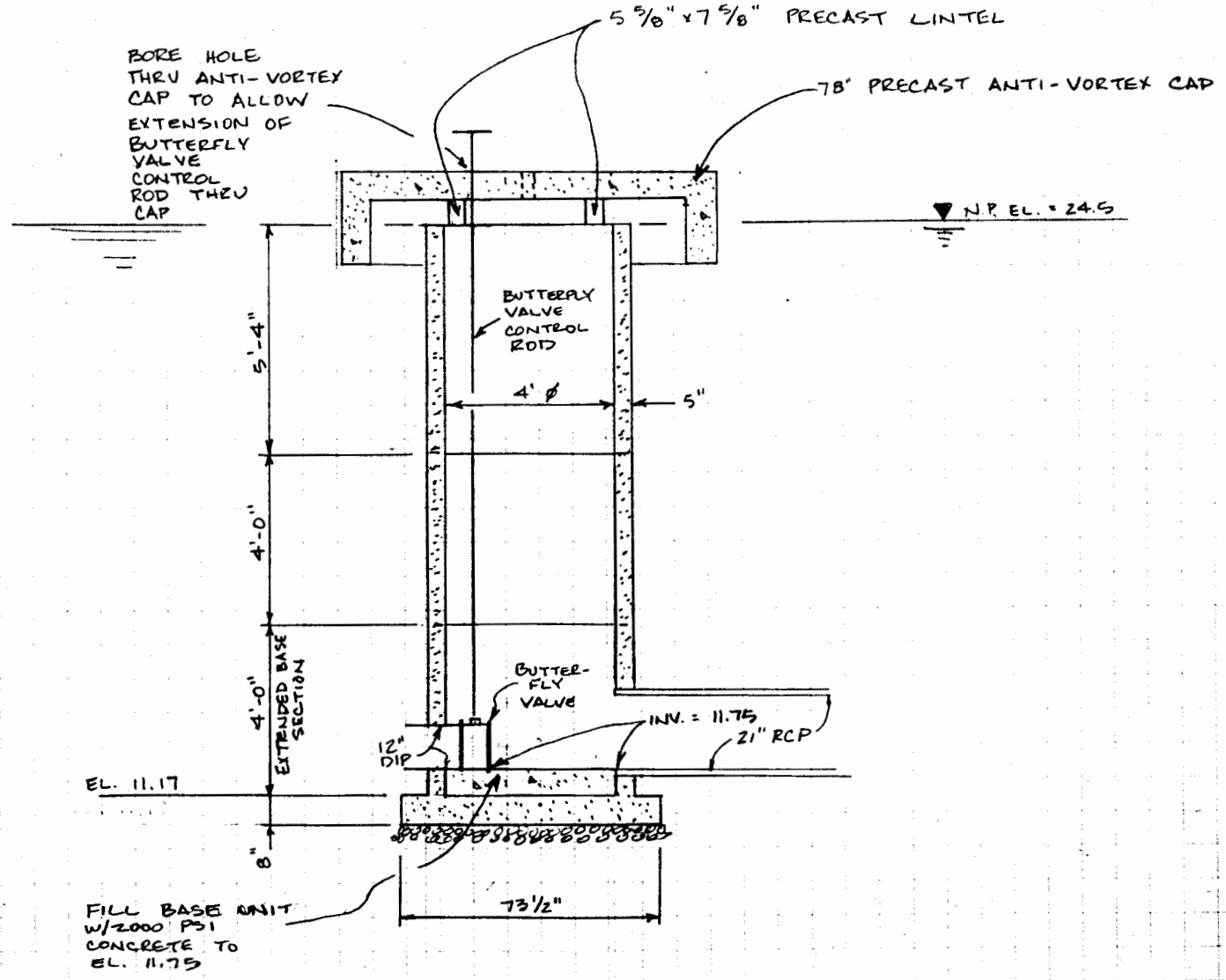

4' ϕ RISER STRUCTURE
1/4" = 1'-0"

SETTLER MILL, SEC 3
J.N. 7061
REDESIGN OF PRINCIPAL SPILLWAY
7/27/88

SETTLERS' MILL AT JAMESTOWN
J.N. 7061
3/23/88

ANTI - SEEP COLLAR PLACEMENT

DETERMINE LENGTH OF BARREL IS SATURATED ZONE (L_s)

$$L_s = Y(Z+4)\left(1 + \frac{S}{0.25 - S}\right)$$

Y = DEPTH OF WATER AT PRINCIPAL SPILLWAY = 14'
Z = SLOPE OF UPSTREAM FACE IN Z FEET TO 1' VERTICAL = 3
S = SLOPE OF BARREL IN FEET / FOOT = 0.0054

$$L_s = 14(7)\left(1 + \frac{0.0054}{0.25 - 0.0054}\right) = 100$$

USING 4 COLLARS EACH SHOULD BE 4.5' IN DIAMETER
WITH SPACING OF $14 \times ((4.5 - 2)/2) = 14 \times 1.25 = 17.5'$

WITH CONSIDERATION OF PIPE LENGTHS, USE 4.5' DIAMETER COLLARS WITH 16' SPACING

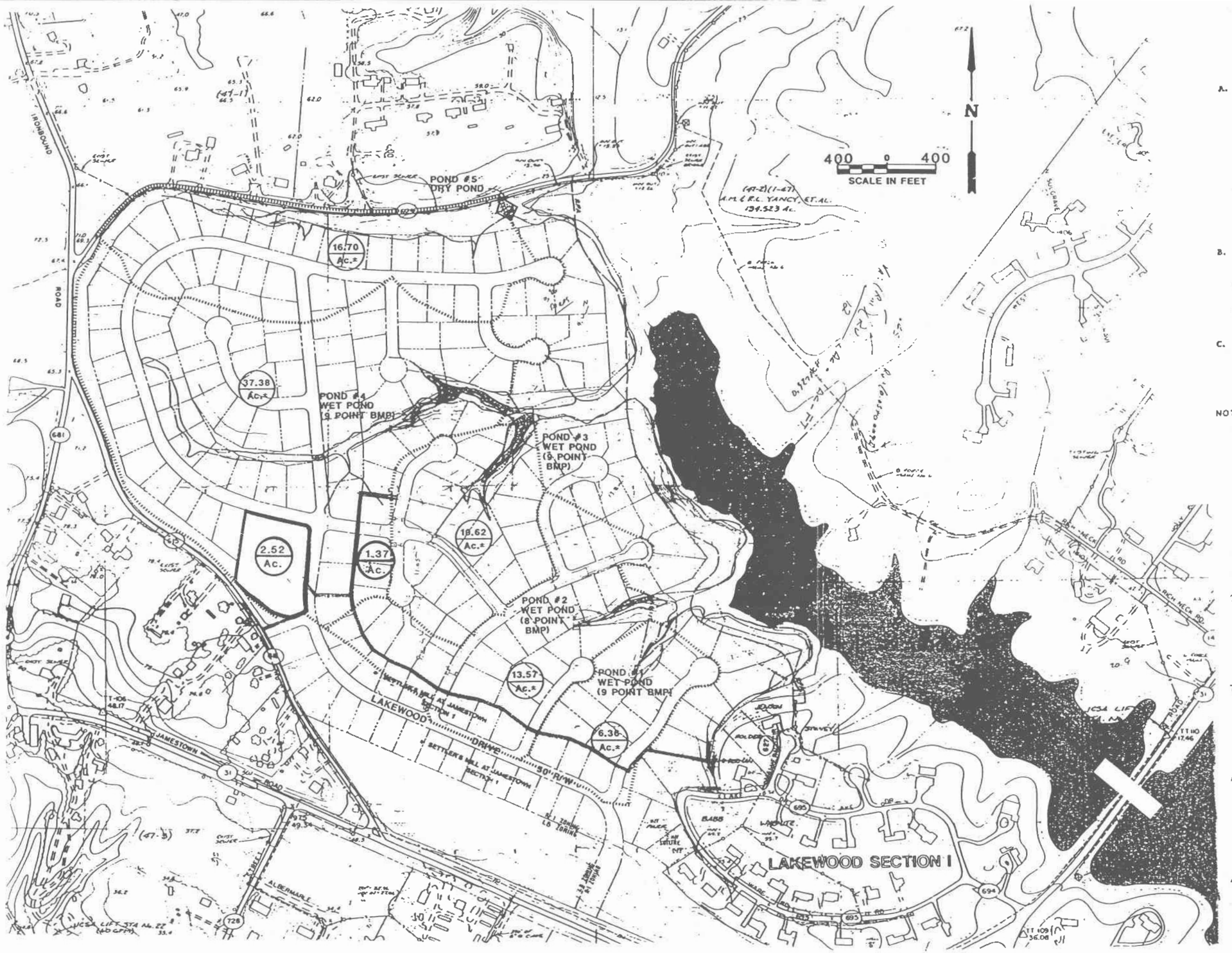

TABLE 3

WORKSHEET FOR BMP POINT SYSTEM

A. STRUCTURAL BMP POINT ALLOCATION

BMP	BMP Points		Fraction of Site Served by BMP		Weighted BMP Points
1, 3, 4*	9	x	20.87 / 40.74 = 51.22	=	4.61
2	8	x	13.57 / 40.74 = 33.31	=	2.66
		x		=	
		x		=	

TOTAL WEIGHTED STRUCTURAL BMP POINTS: 7.27

B. NATURAL OPEN SPACE CREDIT

Fraction of Site		Natural Open Space Credit (0.1 per 1%)		Points for Natural Open Space
11.12 / 40.74 = 27.28	x		=	2.73

C. TOTAL WEIGHTED POINTS

7.27	+	2.73	=	10.00
Structural BMP Points		Natural Open Space Points		TOTAL

NOTE: BMP #3 & #4 HAVE BEEN COMBINED AND CURRENTLY DESIGNED TO SERVE FUTURE ACREAGE THAT WE ARE NOT COUNTING IN THIS CALCULATION.

SUPPORT FORM TO TABLE 3

WORKSHEET FOR BMP POINT SYSTEM

TOTAL OF DEVELOPED AREAS

SECTION 2A & 2B	12.63 AC.	
SECTION 3A & 3B	25.59 AC.	
COMMUNITY RECREATION CENTER	2.52 AC.	
	40.74 ACRES	

TOTAL OF NATURAL OPEN SPACE AND CONSERVATION EASEMENT

SECTION 2A & 2B	4.18 AC.	[2.15 + 2.03]
SECTION 3A & 3B	6.09 AC.	
COMMUNITY RECREATION CENTER	0.85 AC.	
	11.12 ACRES	

AREAS TO BMP'S 1, 3, & 4 [9 POINT BMP'S]

SECTION 2	6.36 AC. TO BMP #1
SECTION 3	10.62 AC. TO BMP #3
SECTION 3	1.37 AC. 3 LOTS TO BMP #4
COMMUNITY RECREATION CENTER	2.52 AC. TO BMP #9
	20.87 ACRES

AREA TO BMP #2 [8 POINT BMP]

SECTIONS 2 & 3	13.57 ACRES TO BMP #2

GEORGE NICE & SONS, INC.
• Road & Utility Construction
• Site Development

September 19, 1994

Mr. Pat Menenchino
JAMES CITY COUNTY CODES COMPLIANCE
P.O. Box JC
Williamsburg, VA 23187

Re: SETTLER'S MILL, SECTION 3B
James City County, Virginia

Mr. Menenchino:

Please let the following constitute of proposed construction sequence for the above mentioned project.

Sequence of Construction

1. Preliminary Field Layout; Clearing Limits → FLAGGED prior to Pre-Con.
2. Initial E&S Measures
   - construction entrance → INSTALLED prior to Pre-Con.
   - silt fencing
3. Clearing Operations
   - ROW
   - Utility & drainage easements
4. Earthwork Operations
   - stripping
   - cut/fill to rough grade
5. Storm Drainage Culvert & Structure Installation
6. Stabilization of Drainage Easements
7. Utility Installations
8. Stone Base Placement
9. Curb & Gutter Installation
10. Final Stabilization
11. Asphalt Paving

P.T.M.

If you should require any additional information regarding the above referenced project, please feel free to contact me at 565-2885.

Sincerely,

GEORGE NICE & SONS, INC.

S. Ray Nice
Vice President

143 Skimino Road • Williamsburg, Virginia 23188
(804) 565-2885 • (800) 300-2885 • FAX (804) 565-1526

WATERSHED	MC	MAINTENANCE PLAN	No	CTRL STRUC DESC	Riser
BMP ID NO	016	SITE AREA acre	0	CTRL STRUC SIZE inches	48
PLAN NO		LAND USE		OTLT BARRL DESC	RCP
TAX PARCEL	(47-1)	old BMP TYP	Wet Pond	OTLT BARRL SIZE inch	30
PIN NO	4711900001A	JCC BMP CODE			
CONSTRUCTION DATE		POINT VALUE		EMERG SPILLWAY	Yes
PROJECT NAME	Settlers Mill Section 3			DESIGN HW ELEV	26.2
FACILITY LOCATION	NE of 116 Holly Grove			PERM POOL ELEV	22.75
CITY-STATE	Williamsburg, VA	SVC DRAIN AREA acres	55	2-YR OUTFLOW cfs	12.40
CURRENT OWNER	Settlers Mill Association			10-YR OUTFLOW cfs	26.25
OWNER ADDRESS	PO Box 1295			REC DRAWING	Yes
OWNER ADDRESS 2		SERVICE AREA DESCRI			
CITY-STATE-ZIP CODE	Williamsburg, VA 23187	IMPERV AREA acres		CONSTR CERTIF	No
OWNER PHONE		RECV STREAM			
MAINT AGREEMENT	Yes	EXT DET-WQ-CTRL	No	LAST INSP DATE	3/25/2002
EMERG ACTION PLAN	No	WTR QUAL VOL acre-ft	0	INTERNAL RATING	2
		CHAN PROT CTRL	No	MISC/COMMENTS	
		CHAN PROT VOL acre-ft	0		
		SW/FLOOD CONTROL	No		
		GEOTECH REPORT	No		

Get Last BMP No

Return to Menu

JAMES CITY COUNTY
POLICY FOR EROSION AND SEDIMENT CONTROL
PRECONSTRUCTION MEETINGS

Intent

The intent of this policy is to establish guidelines for erosion and sediment control preconstruction meetings and to ensure compliance with the Virginia Erosion and Sediment Control Law and Regulations. In general, erosion and sediment control preconstruction meetings are required prior to the issuance of land disturbing activity permits by the County. The following items shall be discussed and agreed upon during the course of the preconstruction meeting between the County agent, the permittee, and the site work contractor.

Guidelines

1. **Phasing of Erosion and Sediment Control Practices.** The County representative shall inform the permittee and the site work contractor as to the required phasing of specific erosion and sediment control practices. The County representative shall also reiterate the time frames for the completion of specific erosion and sediment control measures, as stipulated in the Erosion and Sediment Control Notes on the approved erosion and sediment control plans and project narrative. The contractor shall develop and present for approval prior to the meeting, a sequence of construction that accomplishes the required phasing.

2. **Installation of Specific Erosion and Sediment Control Practices.** The County representative shall instruct the permittee and the site work contractor as to the proper installation of the specific erosion and sediment control practices, as indicated on the approved erosion and sediment control plans. It is imperative that the County representative stress the importance of proper installation **and maintenance** of the specific erosion and sediment control practices.

3. **Inspection and Enforcement Procedures.** The County representative shall inform the permittee/contractor of their need and responsibility to inspect the project on a daily basis to ensure proper operation of the erosion control measures. The County representative will also discuss the County inspection procedures. Inspections will be conducted periodically and within 48-hours of a runoff-producing storm event until the land disturbing permit is released. The enforcement procedures that will be undertaken to correct any deficiencies found during the inspection will be described. The process starts with a verbal notification to the contractor of the problem and required solution, and progresses through written notifications to legal proceedings. Examples of the written notifications are attached.

4. **Limits of Clearing and Tree Preservation/Critical Areas Protection Measures.** The limits of clearing, as shown on the approved plans, shall be clearly delineated with flagging for inspection by the County representative. Flagging shall be spaced at intervals not to exceed 25 feet on-center. Flagging shall be placed at least four (4) feet above existing ground

elevation, but not more than six (6) feet above existing ground elevation. Flagging shall not be stapled, nailed, tacked, or attached in any other manner which may damage trees which are beyond the clearing limits or are designated to be preserved. Flagging shall not be attached to trees designated for removal. Flagging shall consist of white, yellow or orange, 1-3/16-inch wide vinyl plastic flagging. Flagging color shall be consistent throughout the project.

Tree preservation and other critical areas shall also be flagged for inspection by the County representative. The flagging method shall be the same as for the limits of clearing except for the color of flagging material. Prior to any excavation or grading activities, the tree preservation/critical areas protection measures shall be installed and inspected. The following types of tree preservation/critical area protection are acceptable:

a. Plastic fencing - 40 inches high "international orange" plastic (polyethylene) web fencing secured to conventional metal "T" or "U" posts driven to a minimum depth of 18 inches on 6-foot centers.

b. Cord Fencing - Posts with a minimum size of 2 inches square or 2 inches in diameter set securely in the ground protruding at least 4 feet above the ground with two rows of 1/4-inch or thicker cord at least 2 feet apart running between posts with strips of colored surveyor's flagging tied securely to the cord at intervals no greater than 3 feet.

The protection measures shall be kept in good repair for the duration of the construction activities.

If the clearing limit and tree preservation/critical areas are not flagged in accordance with the approved plan, then the preconstruction meeting shall be terminated and the land disturbing permit shall not be issued. The permittee shall schedule another preconstruction meeting after the flagging has been completely and correctly installed. In no case shall the land disturbing permit be issued until the County agent has inspected and approved the flagging for the limits of clearing and the tree preservation/critical areas.

5. **Erosion and Sediment Control Preconstruction Meeting Checklist.** Attached.

6. **Signature of Each Preconstruction Attendee.** The signature of each of the preconstruction meeting attendees will the attendee's printed name, address, daytime phone number and company affiliation shall be required on the preconstruction checklist. Copies of the complete checklist shall be provided to each of the attendees.

EROSION AND SEDIMENT CONTROL PRECONSTRUCTION MEETING CHECKLIST

Project: Settlers Mill 3B Date: 9-21-94 Time: 2:15 AM/PM

Permittee: Settlers Mill Inc. Address: 1111 Old Colony Lane

Contractor: George Nice & Sons

---

1. Phasing of Erosion and Sediment Control Practices

   A. Narrative Plan

   B. Contractor-Developed Sequence of Construction

2. Installation Procedure for Erosion and Sediment Control Practices

✓ Construction Entrance	✓ Outlet Protection
✓ Silt Fence	✓ Sediment Traps
✓ Straw Bale Barrier	✓ Sediment Basins
✓ Rock Check Dams	✓ Diversions
✓ Inlet Protection	✓ Soil Retention Matting
NA Paved Channels	✓ Mulching
✓ Temporary Seeding	✓ Permanent Seeding
____ Other	✓ Storm Drainage System

3. Inspection and Enforcement Procedures

   A. Permittee/Contractor Inspections ✓

   B. County Inspections ✓

   C. Enforcement Actions ✓

      1. Informal Contact ✓

      2. Inspection Report ✓

      3. Notice to Comply ✓

      4. Legal Proceedings ✓

4. Limits of Clearing, Tree and Other Critical Areas Protection Measures Inspection

A. Clearing limits properly flagged? ☑ Yes ☐ No

B. Color of flagging _____

C. Tree Preservation/Critical Areas protected adequately? ~~☐ Yes~~ ~~☐ No~~ NA

D. Color of Flagging ORANGE

E. Tree Preservation/Critical Areas Protection Measures, Type NA

5. Attendees - Identify Contact Person for Erosion Control

Signature: [signature] [signature]

Printed Name: SHEILA REED EVANS S. Ray Nice

Company Affiliation: SETTLER'S MILL INC. George Nice & Sons, Inc

Address: 111 OLD COLONY LA W'BURG 23185 143 Skipino Rd. Williamsburg, VA.

Phone No.: 253-1692 ~~565-2865~~

6. Comments: _____

County Agent: PATRICK T. MENICHINO Date: 9-21-94

Title: ENGINEERING INSPECTOR.

espolicy.txt

Hickory Signpost Rd
Mill Stream Way
Stone Path
Laurel Keep
Holly Grove
Harvest Cir
Hearthside Ln

① 12/06/99 Owner who is siting house on Lot 25 SECTION 6 STOPPED in to get info. on Pond 3 + 4. He is building on lot just upslope of pond. AES is

TRANSMITTAL

Langley and McDonald, P.C.

Engineers
Surveyors
Planners
Landscape Architects
Environmental Consultants

Main Office: 5544 Greenwich Road, Virginia Beach, VA 23462
(757) 473-2000 FAX#: (757) 497-7933
Williamsburg Office: 201 Packets Court, Williamsburg, VA 23185
(757) 253-2975 FAX#: (757) 229-0049
e-mail: langley@langleyeng.com

JAN 1998
RECEIVED
ENVIRONMENTAL DIVISION

Project: Settler's Mill

To: Joan Williamson
James City County Code Compliance
_____
_____

Reply to:

From: Doug White
Date: January 15, 1998
Reply requested: ☐ Yes ☐ No

_____

We are sending you:

- ☐ Attached
- ☐ Under separate cover via: _____
- ☒ Prints
- ☐ Copy of letter
- ☐ Plans
- ☐ Specifications
- ☐ Shop drawings
- ☐ Mylars ☐ _____

Transmitted as checked below:

- ☐ For your use
- ☐ As requested
- ☐ For review and comment
- ☐ For approval
- ☐ Return for correction
- ☐ Approved as noted
- ☐ Approved

Copies	Date	No.	Description
4			Settler's Mill Phase III-A

Remarks: _____

_____
_____
_____
_____

Copies	Enclosures
1. File: 93047-14	☐
2. _____	☐
3. _____	☐

Langley and McDonald

By: NA