CERTIFICATE OF AUTHENTICITY

THIS IS TO CERTIFY THAT THE FOLLOWING ELECTRONIC RECORDS ARE TRUE AND ACCURATE REPRODUCTIONS OF THE ORIGINAL RECORDS OF JAMES CITY COUNTY GENERAL SERVICES DEPARTMENT- STORMW ATER DIVISION; WERE SCANNED IN THE REGULAR COURSE OF BUSINESS PURSUANT TO GUIDELINES ESTABLISHED BY THE LIBRARY OF VIRGINIA AND ARCHIVES; AND HA VE BEEN VERIFIED IN THE CUSTODY OF THE INDIVIDUAL LISTED BELOW.

BMPNUMBER: **MC031**

DATE VERIFIED: **August 26, 2016**

QUALITY ASSURANCE TECHNICIAN: **Charles E. Lovett II**

LOCATION: WILLIAMSBURG, VIRGINIA

Stormwater Division

MEMORANDUM

Date: April 4, 2012

To: Michael J. Gillis, Virginia Correctional Enterprises Document Management Services

From: Leah Hardenbergh

PO: 110426

Re: Files Approved for Scanning

General File ID or BMP ID:	**MC031**
PIN:	**3842000001A**
Owner Name (if known):	**MEADOWS II (THE)**
Legal Property Description:	**NATURAL OPEN SPACE S-4 P-2 THE MEADOWS**
Site Address:	**BEHIND 4869 MILDEN ROAD**

(For internal use only):

Box # 4

Agreements (in file as of scan date): N Book or Doc #:

MC-031

Contents for Stormwater Management Facilities As-built Files

Each file is to contain:

1. As-built plan
2. Completed construction certification
3. Construction Plan
4. Design Calculations
5. Watershed Map
6. Maintenance Agreement
7. Correspondence with owners
8. Inspection Records
9. Enforcement Actions

CONSULTING ENGINEERS

5248 Olde Towne Road • Suite 1 • Williamsburg, Virginia 23188
(757) 253-0040 • Fax (757) 220-8994 • E-mail aes@aesva.com

May 11, 1999

Mr. John H. Kniest, Jr.
Van Kniest, Inc.
426 Airport Road
Williamsburg, Virginia 23185

RE: The Meadows Section 4, Phase I, II & III
Stormwater Management Wet Pond Inspection
AES Project No. 7820-1

Dear Mr. Kniest:

AES Consulting Engineers in April 1999 and on November 4, 1998, and May 11, 1999 performed inspections of the constructed improvements for the James City County required Stormwater Management Wet Pond at the end of Milden Road for the above referenced project. During construction field checks of the equipment by our staff indicated the proper construction methods, techniques, sequences and/or procedures were in accordance with the approved plans and applicable standards. To the best of our knowledge all improvements appear to have been constructed as indicated on the construction drawings.

Should you have any questions pertaining to this matter, please do not hesitate to give me a call.

Sincerely,

AES Consulting Engineers

Steven O. Wigley, P.E.

cc: Mr. Darryl Cook - J.C.C. Code Compliance
Mr. Bill Taylor – Toano Contractors, Inc.

S:\JOBS\7820\00\WORDPROC\Document\78200I00.doc

NOTE: VDOT ACCEPTS NO MAINTENANCE RESPONSIBILITY FOR THE DETENTION POND, AND IS SAVED HARMLESS FROM ANY DAMAGE CAUSED BY THE FAILURE OF THE POND AND ITS OUTFLOW STRUCTURES.

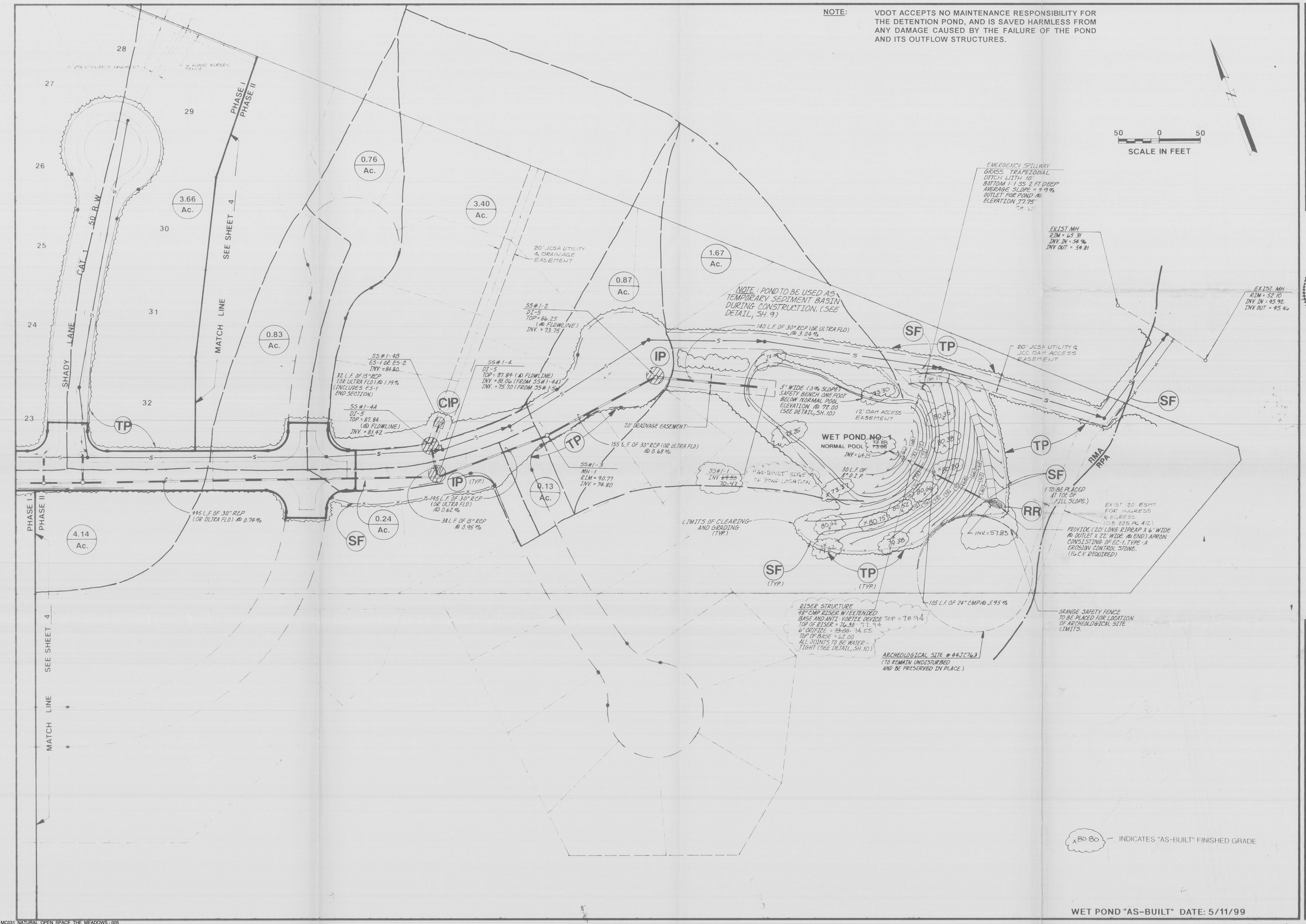

No.	DATE	REVISION / COMMENT / NOTE	BY
3	5/11/99	WET POND "AS-BUILT"	SOW
2	8/4/94	REVISED PER VDOT COMMENTS	SOW
1	6/94	REVISED PER COUNTY COMMENTS	CAH

COMMONWEALTH OF VIRGINIA
STEVEN O. WIGLEY
No. 019307
PROFESSIONAL ENGINEER

5248 Olde Towne Road, Suite 1
Williamsburg, Virginia 23188
(804) 253-0040
Fax (804) 220-8994
CONSULTING ENGINEERS

DRAINAGE, AND EROSION AND SEDIMENT CONTROL PLAN

THE MEADOWS

SECTION VI. PHASE I

OWNER/DEVELOPER: MEADOWS II LIMITED PARTNERSHIP

BERKELEY DISTRICT JAMES CITY COUNTY VIRGINIA

Designed	Drawn
SOW/CAH	DEB
Scale 1"=50'	Date 4/94

Project No. 7820

Drawing No. 5 of 10

MC031_NATURAL_OPEN_SPACE_THE_MEADOWS - 005

MC031

NOTES:

UNLESS OTHERWISE NOTED, ALL DESIGNATED DRAINAGE EASEMENTS SHALL REMAIN PRIVATE.

No.	DATE	REVISION / COMMENT / NOTE	BY
2	10/97	REVISED PER JCC 10-22-97 COMMENT LETTER	DPW
1	8/97	REVISED PER JCC 5-23-97 COMMENT LETTER	DPW

COMMONWEALTH OF VIRGINIA
STEVEN O. WIGLEY
No. 019307
PROFESSIONAL ENGINEER

5248 Olde Towne Road, Suite 1
Williamsburg, Virginia 23188
(757) 253-0040
Fax (757) 220-8994

CONSULTING ENGINEERS

DRAINAGE, GRADING, EROSION AND SEDIMENT CONTROL PLAN

THE MEADOWS

SECTION IV, PHASE III

OWNER/DEVELOPER: MEADOWS II LIMITED PARTNERSHIP

BERKELEY DISTRICT JAMES CITY COUNTY VIRGINIA

Designed	Drawn
SOW/DPW	KEG
Scale	Date
1"=50'	4/10/97
Project No.	
7820-3	
Drawing No.	
4 OF 8	

MC031

10.23.97-08:32 78203C04 DPW

MC031_NATURAL_OPEN_SPACE_THE_MEADOWS - 006

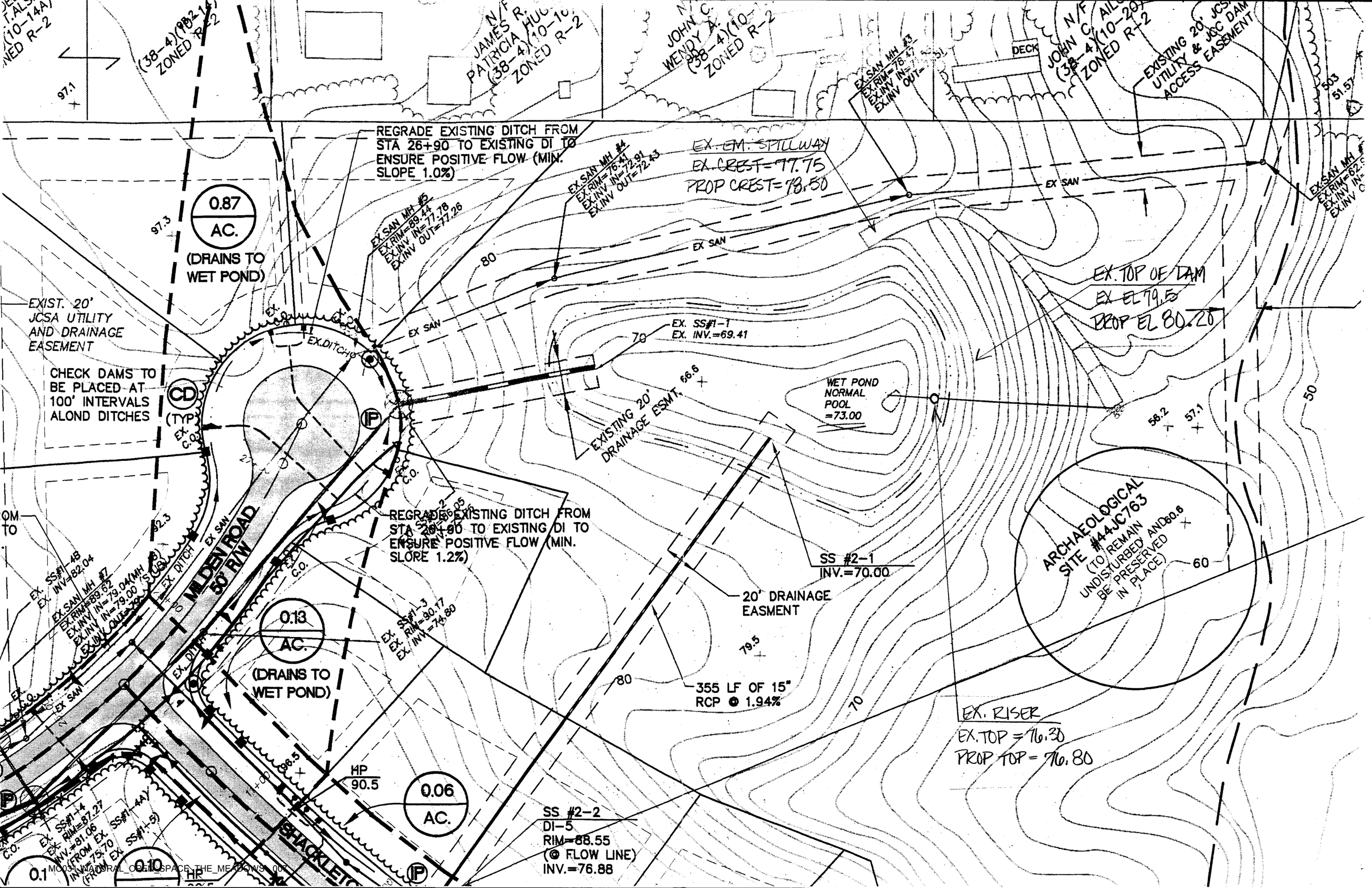

MC03_NATURAL_OPEN_SPACE_THE_MEADOWS_007

HYDROLOGIC REPORT FOR

THE MEADOWS SECTION IV

JOB NO. 7820

POND 1

PREPARED BY:

AES CONSULTING ENGINEERS

C. ANDREW HERR

WILLIAMSBURG, VIRGINIA

DATE:4/94

4/8/94
CAH

THE MEADOWS SECTION IV #7820

(RENICK PROPERTY)

HYDROLOGIC/BMP CALCULATIONS (POND#1)

PRE-DEVELOPMENT

DA = 4.1 AC WOODED → CN=74

POST-DEVELOPMENT

DA = 27.57 AC

22.41 AC ± = RESIDENTIAL LOTS → CN=80

3.59 AC ± = RIGHT OF WAY → CN=91

1.67 AC ± = OPEN (WOODED) → CN=74

$$\frac{(22.41)(80) + (3.59)(91) + (1.67)(74)}{27.57} = 81$$

$\boxed{CN = 81}$ ←

→ TRY BMP/SWM WET POND (DESIGN TYPE 7)

= 50% REMOVAL RATE (9 POINTS)

$V_R = 0.05 + (0.009)(\%\ \text{IMPERVIOUS})$

IMPERVIOUS AREA = LOTS → (22.41)(0.30) = 6.72 AC

R/W → (3.59)(0.60) = 2.15 AC

8.87 AC ←

TOTAL % IMPERVIOUS FOR SITE = $\frac{8.87}{27.57} \cong$ 32% ←

4/8/04
CAH

THE MEADOWS SECTION IV
POND #1 DESIGN CONT

% IMPERVIOUSNESS FOR SITE = 32%

$V_R = 0.05 + (0.009)(32\%) = 0.338$

VOLUME REQ'D = $4(\frac{1}{2}")(\frac{1}{12}')(27.57\,Ac)(43{,}560\,FT/Ac)(0.338) = 67{,}654$

∴ VOLUME REQ'D FOR NORMAL POOL = 67,654 ft^3

→ WATER QUALITY VOL. OF 67,654 ft^3 IS ACHIEVED @ ELEV. = 72.43 (MIN. NORMAL POOL ELEV.)

∴ NORMAL POOL = 73.0

(73.0 > 72.43) ✓ OK

Option 1 STAGE / STORAGE TABLE R to reset

1. RESERVOIR No = 1. 2. RESERVOIR NAME = SED BASIN...

3. S = Ks * Z^b

Ks = 0............ b = 0..........

START ELEV = 0..... INCREMENT = 0...

	STAGE ft	ELEVATION ft	CO AREA sq ft	INC STORAGE cu ft	TOT STORAGE cu ft
4	0.00	64.00.	39.......	0	0
5	2.00	66.00.	2195....	2234	2234
6	4.00	68.00.	6890....	9085	11319
7	6.00	70.00.	11425...	18315	29634
8	8.00	72.00.	17731...	29156	58790
9	9.00	73.00.	22985...	20358	79148
10	10.00	74.00.	25230...	24107	103255
11	12.00	76.00.	33935...	59165	162420
12	14.00	78.00.	45221...	79156	241576
13	16.00	80.00.	55207...	100428	342004
14	0.00	0.00.	0.......	0	0

Change item number: 0 DY to cont

THE MEADOWS SECTION N #7820 4/8/94 CAH

EMERGENCY SPILLWAY DESIGN

→ TRY 10 FT. WIDE SPILLWAY @ ELEV. = 77.75 – TOP

* MAX. ELEV. FOR 100YR STORM = 78.46 – TOP of dam

* Q_{100} @ 78.46 = 19.62 CFS OVER SPILLWAY

→ USE TRAPEZOIDAL SPILLWAY W/ 10 FT BOTTOM
1:1SS, 2FT DEEP, 9.9% SLOPE

FOR Q = 19.62CFS, DEPTH < 1FT (FROM CHANNEL CHARTS)

* MAX. ELEV. FOR 25YR STORM = 77.70
∴ 25YR STORM IS CONTAINED BELOW INV. OF EMERGENCY SPILLWAY
∴ USE GRASS LINING FOR SPILLWAY AND DRAINAGE CHANNEL

THE MEADOWS SECTION IV #7820

ANTI-SEEP COLLAR DESIGN

$$L_S = Y(Z+4)\left[1 + \frac{S}{0.25 - S}\right]$$

$Y = 11.25$ FT

$Z = 3$ FT

$S = 0.0558$ FT/FT

$\boxed{L_S = 101.4 \text{ FT.}}$

→ FROM PLATE 3.14-12 OF VA. E&S CONTROL HANDBOOK

$\boxed{\text{USE 4 COLLARS } (4.25' \times 4.25')}$

SPACING = 14 × PROJECTION OF COLLAR ABOVE BARREL

$\boxed{\therefore \text{ SPACING} \approx 19 \text{ FT.}}$

THE MEADOWS SECTION IV

POND DESIGN CONT

BUOYANCY CALCULATIONS FOR PRINCIPAL SPILLWAY

(POND #1) (PRINCIPAL SPILLWAY = 48" RISER PIPE)

WEIGHT OF WATER DISPACED BY RISER

$$W_{H_2O} = (62.4\ \#/ft^3)(\pi)(2^2)(5.50) = \underline{4{,}313\ lbs.}$$

WEIGHT OF STRUCTURE

= WEIGHT OF RISER + WEIGHT OF ANTI-VORTEX DEVICE

WEIGHT OF RISER

USE 48" FULL COATED CMP (MIN. THICKNESS = 0.138 in)

WEIGHT = 92 lbs./ft.

FOR 11.25 ft RISER, WEIGHT = 1,035 lbs.

WEIGHT OF ANTI-VORTEXING DEVICE

USE 12" DIAMETER CYLINDER

WEIGHT = 123 lbs/ft

FOR 21 in CYLINDER, WEIGHT = 215 lbs

TOTAL STRUCTURE WEIGHT = 1250 lbs < 4,313 lbs

∴ ANCHORING IS REQ'D

→

THE MEADOWS SECTION IV

BUOYANCY CALCS CONT

TOTAL STRUCTURE WEIGHT = 1,250 lbs < 4,313 lbs

∴ ANCHORING IS REQ'D

* USE 1/4" STEEL PLATE AS RISER BASE, AND BACKFILL RISER W/ CONCRETE FROM TOP OF STEEL BASE AT ELEV 62.0 TO INV. OUT OF BARREL AT ELEV. 64.25.

→ NEED ≈ 3,100 lbs TO OVERCOME UPWARD FORCES

WEIGHT OF CONCRETE (ANCHOR)

$V_{conc} = \pi R^2 h = \pi (2^2)(2.25)$

$V_{conc} = 28.27\ ft^3$

$W_{conc} = (150\ lbs/ft^3)(28.27\ ft^3) = 4{,}241\ lbs.$ ←

$W_{STRUCTURE} + W_{conc} > W_{H_2O}$

1,250 lbs + 4,241 lbs = 5491 lbs. > 4,313 lbs ✓

∴ STRUCTURE WILL NOT FLOAT!

DOWNWARD FORCES > 1.25 * UPWARD FORCES ✓

```
 Option 1                          STAGE / STORAGE TABLE                          R to reset
IMMMMMMMMMMMMMMMMMMMMMMMMMMMMMMMMMMMMMMMMMMMMMMMMMMMMMMMMMMMMMMMMMMMMMMMMMMMMMMMMMMMMMMMMMMMMMMMM
: 1. RESERVOIR No = 3.     2. RESERVOIR NAME = POND #1.....
: 3. S = Ks * Z^b
:      Ks = 0............     b = 0..........
:      START ELEV = 0.....    INCREMENT = 0...
:
:      STAGE      ELEVATION      CO AREA       INC STORAGE      TOT STORAGE
:      ft         ft             sq ft         cu ft            cu ft
:
:  4     0.00        73.00.      22985...            0                0
:  5     1.00        74.00.      25230...        24107            24107
:  6     3.00        76.00.      33935...        59165            83272
:  7     5.00        78.00.      45221...        79156           162428
:  8     7.00        80.00.      55207...       100428           262856
:  9     0.00         0.00.      0.......            0                0
: 10     0.00         0.00.      0.......            0                0
: 11     0.00         0.00.      0.......            0                0
: 12     0.00         0.00.      0.......            0                0
: 13     0.00         0.00.      0.......            0                0
: 14     0.00         0.00.      0.......            0                0
:
:
HMMMMMMMMMMMMMMMMMMMMMMMMMMMMMMMMMMMMMMMMMMMMMMMMMMMMMMMMMMMMMMMMMMMMMMMMMMMMMMMMMMMMMMMMMMMMMMMM
Change item number: 0                                                          DY to cont
```

```
 Reservoir No. 3                    OUTLET STRUCTURES
IMMMMMMMMMMMMMMMMMMMMMMMMMMMMMMMMMMMMMMMMMMMMMMMMMMMMMMMMMMMMMMMMMMMMMMMMMMMMMMMMMMMMMMMMMMMMMMMM
: CULVERT STRUC  A. Q=CoA[2gh/k]^.5     CULVERT STRUC  B. Q=CoA[2gh/k]^.5
:
: 1. WIDTH  (in)     = 24.               9. WIDTH  (in)     = 6..
: 2. HEIGHT (in)     = 24.              10. HEIGHT (in)     = 6..
: 3. No. BARRELS     = 1..              11. No. BARRELS     = 1..
: 4. INVERT ELEV.    = 64.25....        12. INVERT ELEV.    = 73.......
: 5. Co = 0.60                          13. Co = 0.60
: 6. CULVERT LENGTH (ft) = 105.         14. CULVERT LENGTH (ft) = 0...
: 7. CULVERT SLOPE (%)   = 5.95         15. CULVERT SLOPE (%)   = 0...
: 8. MANNING'S N-VALUE   = .013         16. MANNING'S N-VALUE   = .013
:                                       17. MULTI-STAGE OPTION ? (Y/N) N
:
: WEIR STRUCTURE A.       Q=CwLH^EXP    WEIR STRUCTURE B.       Q=CwLH^EXP
:
: 18. CREST LENGTH (ft)  = 12.56..      23. CREST LENGTH (ft)  = 10.....
: 19. CREST ELEVATION    = 76.3...      24. CREST ELEVATION    = 77.75..
: 20. Cw = 3.00                         25. Cw = 3.00
: 21. EXP = 1.50                        26. EXP = 1.50
: 22. MULTI-STAGE OPTION ? (Y/N) Y      27. MULTI-STAGE OPTION ? (Y/N) N
:
:
HMMMMMMMMMMMMMMMMMMMMMMMMMMMMMMMMMMMMMMMMMMMMMMMMMMMMMMMMMMMMMMMMMMMMMMMMMMMMMMMMMMMMMMMMMMMMMMMM
Change item number: 0                                                          DY to cont
```

HYDROLOGIC REPORT

2 YR PRE DEVELOPMENT..
TO POND #1.....
.....

Hyd. No. 1

Hydrograph type	= S.C.S. RUNOFF	Peak discharge	= 7.34 cfs
Storm frequency	= 2 yr	Time interval	= 2 min
Basin area	= 4.1 ac	Basin curve No.	= 74
Ave basin slope	= 6 %	Hydraulic len	= 550 ft
Basin lag	= 9.0 min	Time of concen	= 15.00 min
Total precip.	= 3.80 in	Distribution	= S.C.S. II

HYDROGRAPH DISCHARGE TABLE

TIME--OUTFLOW (hrs cfs)		TIME--OUTFLOW (hrs cfs)		TIME--OUTFLOW (hrs cfs)		TIME--OUTFLOW (hrs cfS)	
11.77	1.27	11.80	1.67	11.83	2.19	11.87	2.88
11.90	3.79	11.93	4.89	11.97	5.98	12.00	6.85
12.03	7.34	12.07	7.32	12.10	6.81	12.13	6.00
12.17	5.10	12.20	4.22	12.23	3.40	12.27	2.67
12.30	2.09	12.33	1.68	12.37	1.46	12.40	1.36
12.43	1.30	12.47	1.24	12.50	1.17	12.53	1.11
12.57	1.05	12.60	0.99	12.63	0.93	12.67	0.89

HYDROLOGIC REPORT

2 YR POST DEVELOPMENT.
TO POND #1.....
.....

Hyd. No. 2

Hydrograph type	= S.C.S. RUNOFF	Peak discharge	= 36.00 cfs
Storm frequency	= 2 yr	Time interval	= 2 min
Basin area	= 27.57 ac	Basin curve No.	= 81
Ave basin slope	= 1 %	Hydraulic len	= 1700 ft
Basin lag	= 28.2 min	Time of concen	= 47.16 min
Total precip.	= 3.80 in	Distribution	= S.C.S. II

HYDROGRAPH DISCHARGE TABLE

TIME--OUTFLOW (hrs cfs)		TIME--OUTFLOW (hrs cfs)		TIME--OUTFLOW (hrs cfs)		TIME--OUTFLOW (hrs cfS)	
10.83	0.98	10.87	1.02	10.90	1.06	10.93	1.10
10.97	1.14	11.00	1.19	11.03	1.23	11.07	1.27
11.10	1.32	11.13	1.37	11.17	1.42	11.20	1.48
11.23	1.54	11.27	1.60	11.30	1.67	11.33	1.74
11.37	1.81	11.40	1.89	11.43	1.98	11.47	2.07
11.50	2.17	11.53	2.29	11.57	2.44	11.60	2.62
11.63	2.85	11.67	3.15	11.70	3.54	11.73	4.03
11.77	4.66	11.80	5.47	11.83	6.52	11.87	7.89
11.90	9.65	11.93	11.79	11.97	14.17	12.00	16.64
12.03	19.11	12.07	21.56	12.10	23.95	12.13	26.27
12.17	28.48	12.20	30.54	12.23	32.41	12.27	34.00
12.30	35.21	12.33	35.92	12.37	36.00	12.40	35.49
12.43	34.58	12.47	33.51	12.50	32.37	12.53	31.18
12.57	29.94	12.60	28.65	12.63	27.31	12.67	25.93
12.70	24.52	12.73	23.06	12.77	21.59	12.80	20.09
12.83	18.59	12.87	17.10	12.90	15.63	12.93	14.19
12.97	12.80	13.00	11.48	13.03	10.26	13.07	9.19
13.10	8.29	13.13	7.63	13.17	7.18	13.20	6.89
13.23	6.65	13.27	6.42	13.30	6.22	13.33	6.02
13.37	5.85	13.40	5.68	13.43	5.53	13.47	5.39
13.50	5.26	13.53	5.14	13.57	5.02	13.60	4.92
13.63	4.82	13.67	4.73	13.70	4.64	13.73	4.56
13.77	4.47	13.80	4.39	13.83	4.32	13.87	4.24
13.90	4.17	13.93	4.10	13.97	4.03	14.00	3.96
[illegible]	[illegible]	[illegible]	3.83	14.10	3.77	14.13	3.71

HYDROLOGIC REPORT

2YR POST DEVELOPMENT..
ROUTED THROUGH .....
STRUCTURE.POND #1.....

Hyd. No. 7

Hydrograph type = RESERVOIR ROUTE Peak discharge = 6.84 cfs
Storm frequency = 2 yr Time interval = 2 min
Inflow hyd. no. = 2 Reservoir no. = 3

HYDROGRAPH DISCHARGE TABLE

TIME hrs	INFLOW (i) cfs	INFLOW (j) cfs	2S/dt-O (i) cfs	2S/dt+O (j) cfs	OUTFLOW cfs
10.87	1.02	1.06	47.07	47.17	0.05
10.90	1.06	1.10	49.05	49.15	0.05
10.93	1.10	1.14	51.09	51.20	0.06
10.97	1.14	1.19	53.21	53.33	0.06
11.00	1.19	1.23	55.41	55.54	0.07
11.03	1.23	1.27	57.68	57.82	0.07
11.07	1.27	1.32	60.03	60.18	0.08
11.10	1.32	1.37	62.47	62.63	0.08
11.13	1.37	1.42	64.99	65.16	0.09
11.17	1.42	1.48	67.60	67.78	0.09
11.20	1.48	1.54	70.30	70.50	0.10
11.23	1.54	1.60	73.11	73.32	0.10
11.27	1.60	1.67	76.03	76.25	0.11
11.30	1.67	1.74	79.06	79.29	0.12
11.33	1.74	1.81	82.21	82.46	0.13
11.37	1.81	1.89	85.49	85.76	0.14
11.40	1.89	1.98	88.90	89.20	0.15
11.43	1.98	2.07	92.45	92.77	0.16
11.47	2.07	2.17	96.16	96.50	0.17
11.50	2.17	2.29	100.03	100.41	0.19
11.53	2.29	2.44	104.10	104.50	0.20
11.57	2.44	2.62	108.41	108.84	0.21
11.60	2.62	2.85	113.00	113.46	0.23
11.63	2.85	3.15	117.98	118.47	0.25
11.67	3.15	3.54	123.46	123.99	0.26

HYDROGRAPH DISCHARGE TABLE Cont'd

TIME hrs	INFLOW (i) cfs	INFLOW (j) cfs	2S/dt-O (i) cfs	2S/dt+O (j) cfs	OUTFLOW cfs
22.90	1.02	1.02	1428.65	1431.82	1.59
22.93	1.02	1.02	1427.52	1430.69	1.59
22.97	1.02	1.02	1426.39	1429.56	1.58
23.00	1.02	1.02	1425.26	1428.43	1.58
23.03	1.02	1.01	1424.12	1427.29	1.58
23.07	1.01	1.01	1422.99	1426.15	1.58
23.10	1.01	1.01	1421.85	1425.02	1.58
23.13	1.01	1.01	1420.71	1423.88	1.58
23.17	1.01	1.01	1419.57	1422.73	1.58
23.20	1.01	1.01	1418.43	1421.59	1.58
23.23	1.01	1.01	1417.28	1420.44	1.58
23.27	1.01	1.01	1416.14	1419.30	1.58
23.30	1.01	1.00	1414.99	1418.15	1.58
23.33	1.00	1.00	1413.84	1417.00	1.58
23.37	1.00	1.00	1412.69	1415.85	1.58
23.40	1.00	1.00	1411.54	1414.69	1.58
23.43	1.00	1.00	1410.38	1413.54	1.58
23.47	1.00	1.00	1409.23	1412.38	1.58
23.50	1.00	1.00	1408.07	1411.22	1.58
23.53	1.00	0.99	1406.91	1410.06	1.58
23.57	0.99	0.99	1405.75	1408.90	1.58
23.60	0.99	0.99	1404.58	1407.74	1.58
23.63	0.99	0.99	1403.42	1406.57	1.57
23.67	0.99	0.99	1402.25	1405.40	1.57
23.70	0.99	0.99	1401.09	1404.23	1.57
23.73	0.99	0.99	1399.92	1403.06	1.57
23.77	0.99	0.99	1398.74	1401.89	1.57
23.80	0.99	0.98	1397.57	1400.72	1.57
23.83	0.98	0.98	1396.40	1399.54	1.57
23.87	0.98	0.98	1395.22	1398.36	1.57
23.90	0.98	0.98	1394.04	1397.18	1.57
23.93	0.98	0.98	1392.86	1396.00	1.57
23.97	0.98	0.00	1391.68	1394.82	1.57
24.00	0.00	0.00	1389.52	1392.66	1.57

Maximum outflow (cfs) = 6.84
Maximum storage (cu ft) = 105330
Maximum elevation (ft) = 76.56

Qp = 6.8 RESERVOIR ROUTE 2 Yr

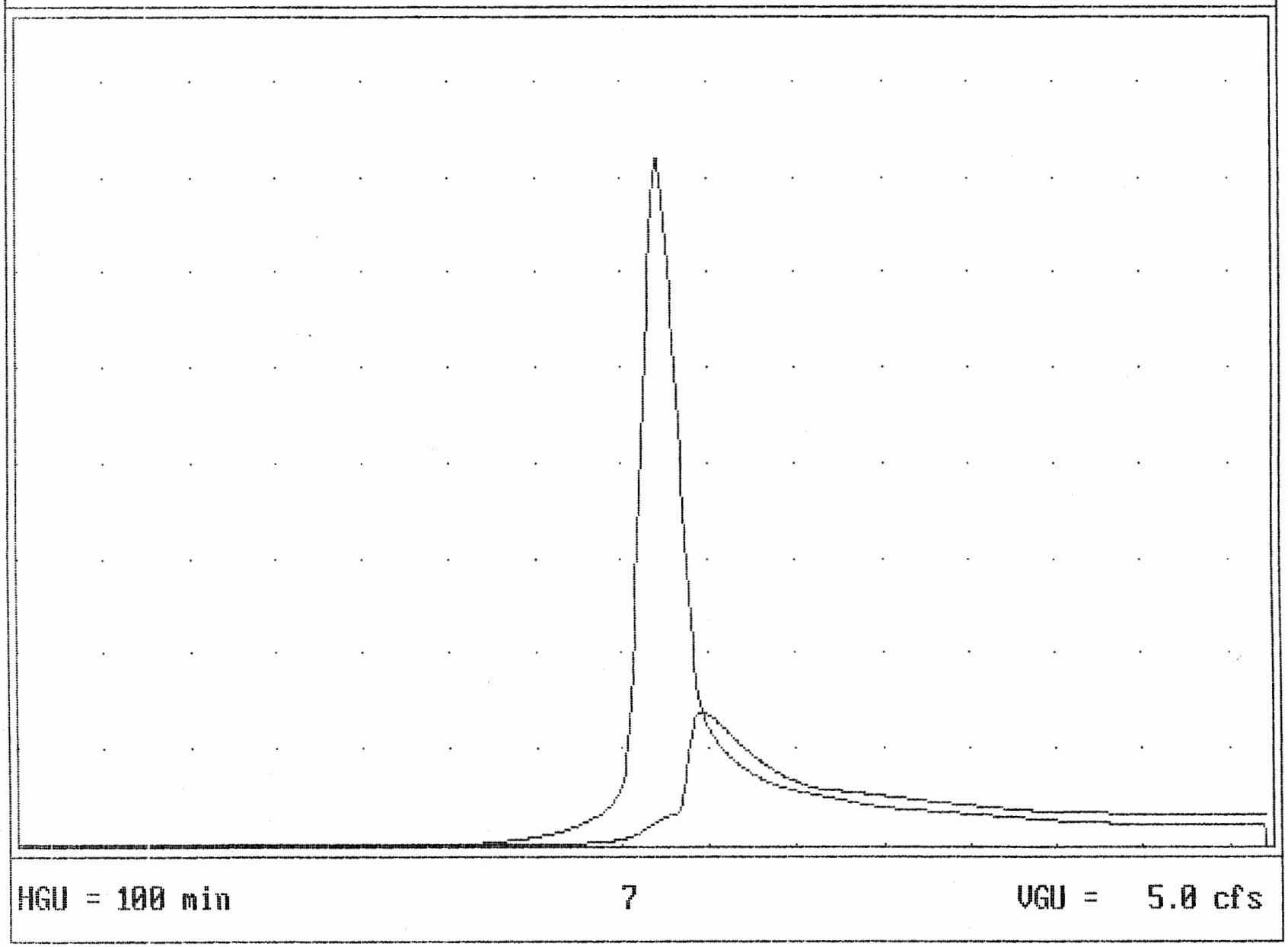

MAX STORAGE = 105330

MAX ELEVATION = 76.56

Qp = 44.5 RESERVOIR ROUTE 10 Yr

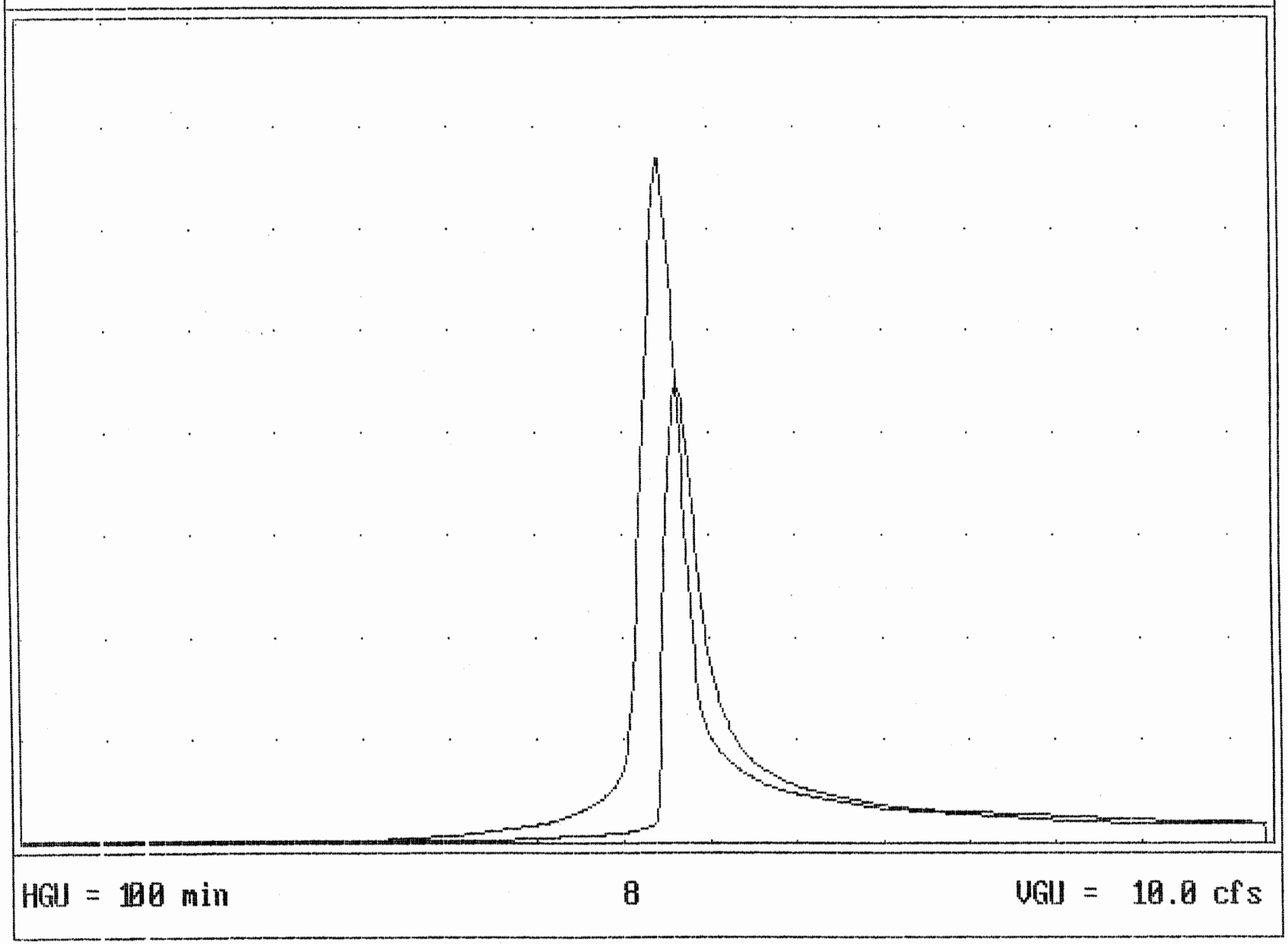

MAX STORAGE = 138044

MAX ELEVATION = 77.38

Qp = 55.5 RESERVOIR ROUTE 25 Yr

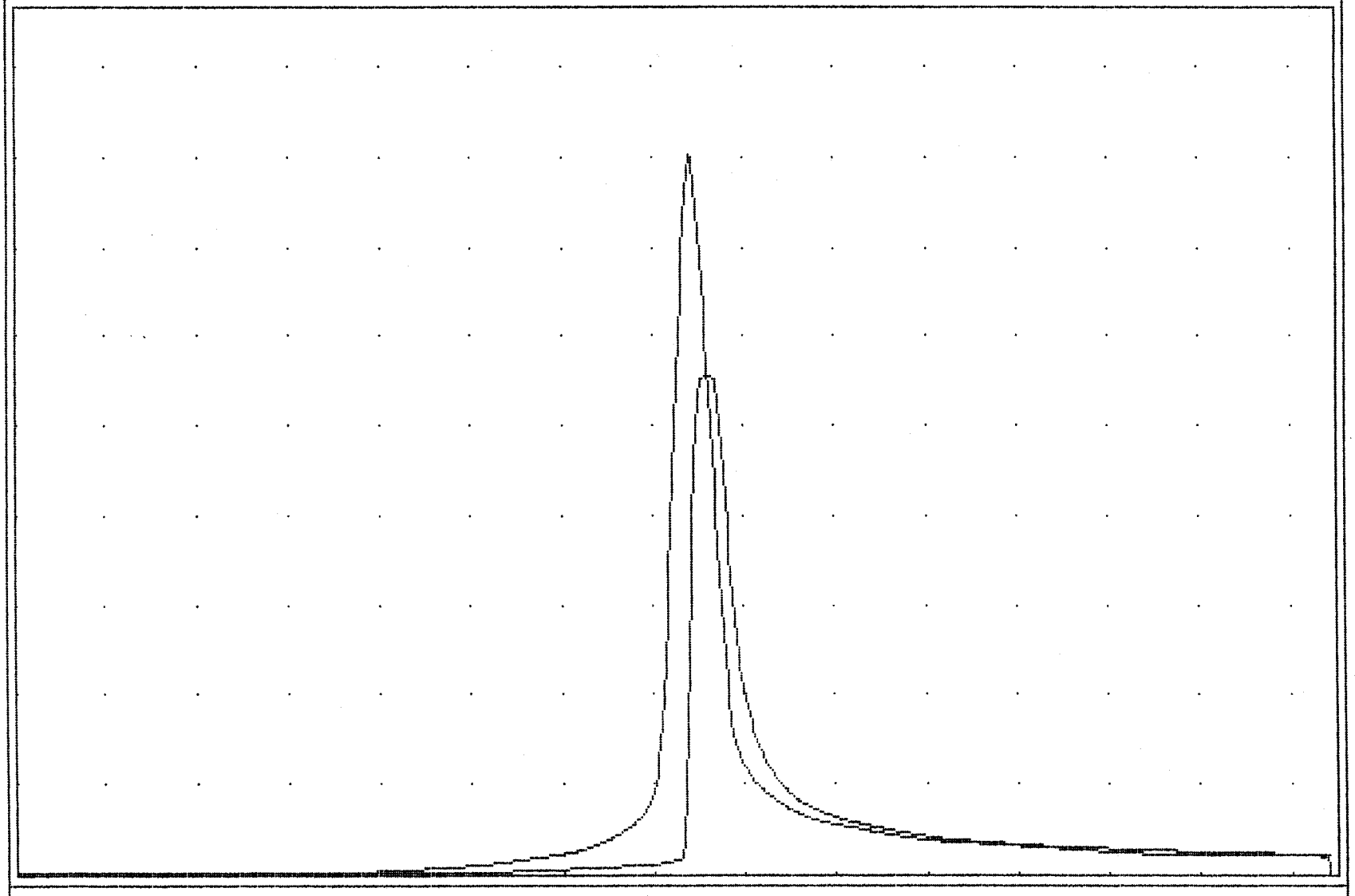

HGU = 100 min 20 VGU = 10.0 cfs

MAX STORAGE = 150465

MAX ELEVATION = 77.70

Qp = 75.2 RESERVOIR ROUTE 100 Yr

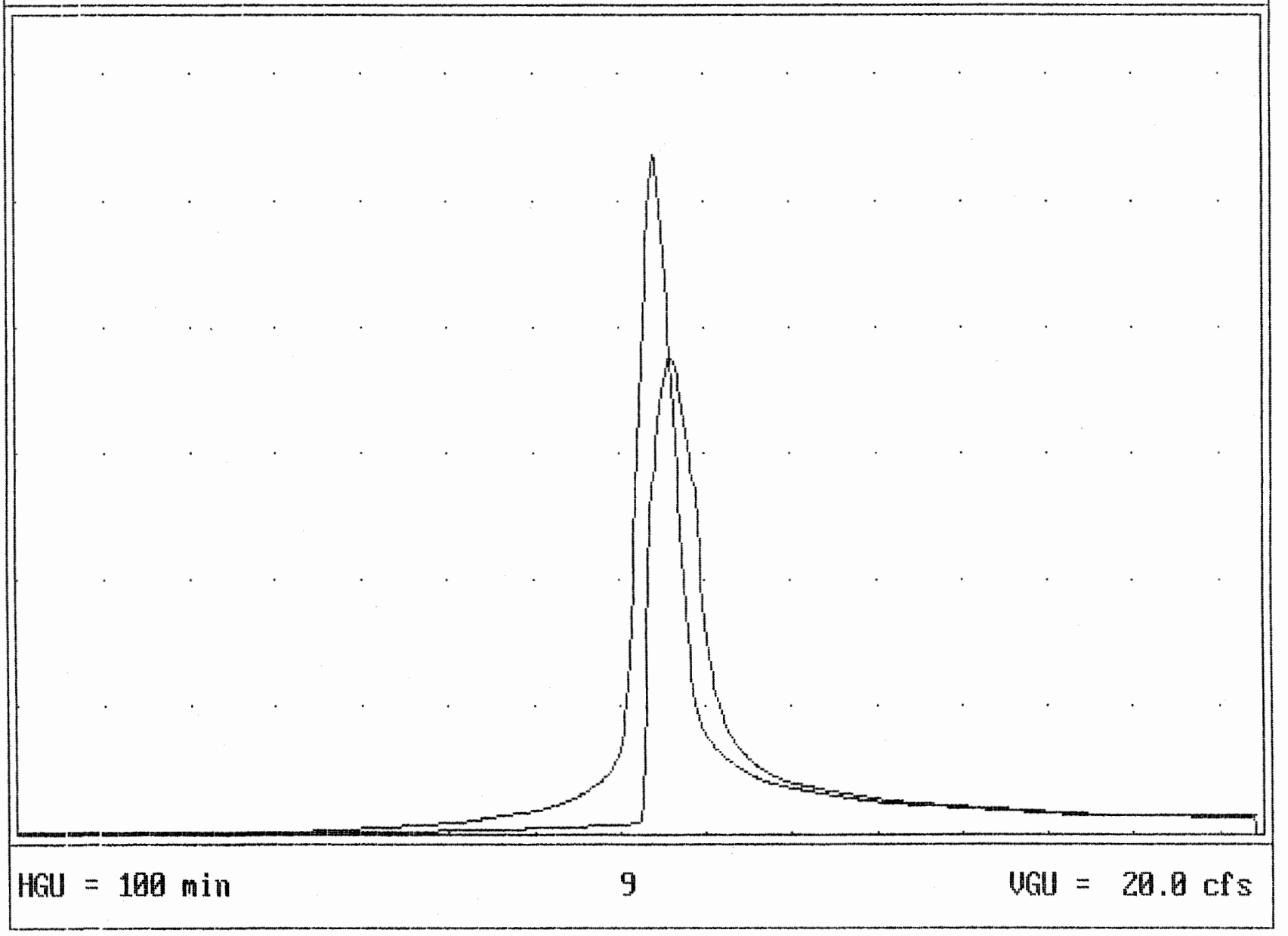

MAX STORAGE = 185518

MAX ELEVATION = 78.46

STORM SEWER CALCULATIONS

FOR

THE MEADOWS - SECTION IV - PHASE 2

PREPARED BY:

AES Consulting Engineers
Deirdre P. Wells
AES Job # 7820-2
1 - 14 - 97

✓ 73

1-7-97 (REVISED)

SHACKLETON LANE

ROUTE _____ PROJ. 7820-2 MEADOWS-SECT IV-PH2

COUNTY _____ DISTRICT _____

DESCRIPTION _____

L & D 229

STORM SEWER DESIGN COMPUTATIONS

SHEET 1 OF 2

FROM POINT	TO POINT	AREA DRAIN. "A" ACRES	RUN-OFF COEF. C	CA INCRE-MENT	CA ACCUM-ULATED	INLET TIME MIN-UTES	RAIN FALL I_{10} IN./HR.	RUNOFF Q_{10} C.F.S.	INVERT ELEVATIONS UPPER END	INVERT ELEVATIONS LOWER END	LENGTH FT.	SLOPE FT./FT.	DIA. IN.	CAPA-CITY Q_{FULL} C.F.S.	VEL. F.P.S.	FLOW TIME MIN ~~SEC.~~	REMARKS
(1)	(2)	(3)	(4)	(5)	(6)	(7)	(8)	(9)	(10)	(11)	(12)	(13)	(14)	(15)	(16)	(17)	(18)
2-2	2-1	0.49	0.43	0.211	0.211	5	7.0	1.48	79.3	78.2	115	0.005	12	2.52	3.33	0.6	
2-1	DRY POND	0.11	0.43	0.047	0.258	5	7.0	1.80	78.1	67.0	225	0.049	12	7.88	7.84	0.5	

MC031_NATURAL_OPEN_SPACE_THE_MEADOWS - 026

LD-347

HYDRAUL C GRADE LINE

PROJECT THE MEADOWS - SECT IV - PHASE 2
AES #7820-2 1-7-97
SHACKLETON LANE (REVISION)

INLET STATION	Outlet Water Surface Elev.	D_o	Q_o	L_o	S_{f_o} %	H_f	JUNCTION LOSS												Final H.	Inlet Water Surface Elev.	Rim Elev.
							V_o	H_o	Q_i	V_i	Q_iV_i	$\frac{V_i^2}{2g}$	H_i	Angle	H_Δ	H_t	1.3 H_t	0.5 H_t			
(1)	(2)	(3)	(4)	(5)	(6)	(7)	(8)	(9)	(10)	(11)	(12)		(13)	(14)	(15)	(16)	(17)	(18)	(19)	(20)	(21)
13+11	70.4	12"	1.80	225	.049	11.1	7.84	0.24	1.48	3.33	4.93	0.17	0.06	90°	0.12	0.42	0.55	/	11.65	82.05	86.20
14+26	82.05	12"	1.48	115	.005	0.58	3.33	0.04	/	/	/	/	/	/	/	0.04	0.06	/	0.64	82.69	83.30

$H_i = 0.35 \frac{V_i^2}{2g}$ $H_o = 0.25 \frac{V_o^2}{2g}$ $H_\Delta = K \frac{V_i^2}{2g}$

FINAL $H = H_f + H_t$

$H_t = H_o + H_i + H_\Delta$

SEE LD-72(D)67

90° K = 0.70	50° K = 0.47	20° K = 0.16
80° K = 0.66	40° K = 0.38	15° K = 0.10
70° K = 0.61	30° K = 0.28	
60° K = 0.55	25° K = 0.22	

THE MEADOWS - SECT IV
PHASE 2
1-6-97

HYDRAULIC GRADE LINE CALCS - SHACKLETON LANE

→ DETERMINE V_o:

$Q_o = 1.80$ CFS

$Q_{FULL} = \frac{0.463}{n} d^{8/3} S^{1/2}$

$n = 0.013$
$d = 1$ FT
$S = 0.049$ FT/FT

$Q_{FULL} = 7.88$ CFS

$\frac{Q_o}{Q_{FULL}} = 0.23 \rightarrow 23\%$

USING HYDRAULIC ELEMENTS SECTION CHART, V_o IS 78% OF V_{FULL}.

$V_{FULL} = \frac{0.59}{n} d^{2/3} S^{1/2}$

$V_{FULL} = 10.0$ FPS

V_o IS THEN FOUND AS FOLLOWS:

$V_o = (10.0)(.78)$

$V_o = 7.84$ FPS

→ DETERMINE V_i:

$Q_i = 1.48$ CFS

$Q_{FULL} = \frac{0.463}{n} d^{8/3} S^{1/2}$

$n = 0.013$
$d = 1$ FT
$S = 0.005$ FT/FT

$Q_{FULL} = 2.52$ CFS

$\frac{Q_o}{Q_{FULL}} = 0.59 \rightarrow 59\%$

USING HYDR. ELEM. CHART, V_o IS 104% OF V_{FULL}

$V_{FULL} = \frac{0.59}{n} d^{2/3} S^{1/2}$

$V_{FULL} = 3.20$ FPS

V_o IS THEN CALCULATED AS FOLLOWS:

$V_o = (3.20)(1.04) = 3.33$ FPS

RIP RAP CALCS (REVISED) 12-11-96

@ SS 2-1 OUTFALL

12" CMP w/ $Q_2 = CAI_2 = (0.258)(5.6 \text{ IN/HR})$
$= 1.44$ CFS

APRON LENGTH: $D_o = 12"$ OR 1 FT w/ MIN. TAILWATER CONDITION
USING MIN SHOWN, $L_a = 6$ FT (PLATE 3.18-3)
APRON WIDTH: UPSTREAM $W = 3(D_o) = 3$ FT
DNSTREAM $W = L_a + D_o = 7$ FT
APRON DEPTH: USE 1.5 FT

TOTAL $\forall = 40.5$ CF

→ PROVIDE 6 FT LONG x 3 FT WIDE AT OUTLET x 7 FT WIDE AT END x 1.5 FT DEEP APRON CONSISTING OF EC-1, CLASS I EROSION CONTROL STONE (1.5 CY REQUIRED) OVER FILTER FABRIC

@ TIMBER STRUCTURE OUTFALL

7.1" x 7.1" SQ OPENING w/ $Q_2 = 3.6$ CFS (FROM STORM ROUTING INFO)

APRON LENGTH: D_o EQIV. = 8" w/ MIN TAILWTR COND.
$L_a = 6$ FT (12"Ø FOR 3.6 CFS)
APRON WIDTH: UPSTM = 3 FT
DNSTM = 7 FT (6.6 FT RQD, BUT USE 7 FT)
APRON DEPTH: USE 1.5 FT

→ PROVIDE APRON EQUAL TO SS 2-1 APRON

6' L x 3' W x 7' W x 1.5' D

LD-269
Rev 3-83

Project THE MEADOWS-SECT IV-PH2 #7820-2
FLEETWOOD LANE CULVERT @ MILDEN ROAD (#1)

Plan Sheet No. ____ Designer DPW
Rev. Date ____ Date 11-20-96

Sheet ____ of ____

HYDROLOGICAL DATA:

D.A. = 0.72 AC.

C = 0.43
T_c = 5 MIN
I_2 = 5.6 IN/HR
I_{10} = 7 IN/HR

$\frac{HW}{D}$ = 0.68 (from CHART 1)
d_c = 0.5 (from CHART 4)
$HW = h_o + LS_o$

AHW Controls

100 yr. Flood plain ____ elev. ____
Design AHW depth ____ elev. ____
Structures ____ elev. ____

STATION ____

freq. TW elev.
____ = ____
____ = ____
____ = ____
____ = ____
____ = ____

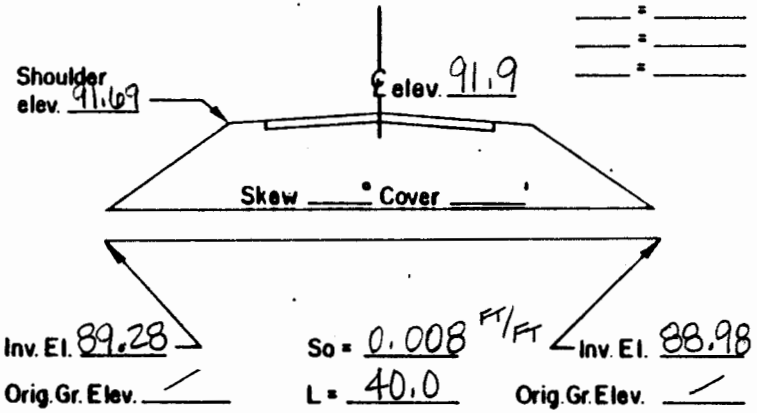

DISCHARGES USED

Q 2 = 1.73 CFS
Q 10 = 2.18 CFS
Q ____ = ____ CFS
Q ____ = ____ CFS
Q ____ = ____ CFS

RISK ASSESSMENT ADT ____

Detours Available ____ , Length ____
Overtopping Stage ____
Flood Plain Management ____
Criteria and Significant Impact ____

240 A

CULVERT TYPE & SIZE	Q	Q/B	HEADWATER COMPUTATIONS									CONT. HW. ELEV.	OUTLET VELOCITY		End Treat.	COMMENTS
			INLET CONT.		OUTLET CONTROL											
			HW/D	HW	Ke	dc	$\frac{dc+D}{2}$	ho	H	LSo	HW		C.M.	Smooth		
15" RCP	2.18		0.68	0.85	0.5	0.5	0.87	0.87	NEG	0.32	1.19	1.19				OUTLET CONTROLS HW
A = 1.23 SF																
V = 1.78 FPS																

Design Flood Exceed Prob. ____ Elev. ____
Overtop Flood Exceed Prob. ____ Elev. ____
Base Flood 1% Exceed Prob. ____ Elev. ____

ROADSIDE DITCH DESIGN

PROJECT MEADOWS-SECT IV-PH 2 AES # 7820-2 DATE 11-21-96

ST. NAME MILDEN ROAD

C = 0.43

TYP. SECT: V DITCH W/ 3:1 & 2:1 SS; 1.5' DEEP

NORFOLK CURVE: I_2 = 5.6 IN/HR; I_{10} = 7 IN/HR

FROM STA (DIR OF	TO STA FLOW)	LEFT OR RIGHT	A AC	Tc MIN	Q2 = C(I2)A CFS	CUM. Q2 CFS	AVG SLOPE FT/FT	n	ACTUAL VEL2 FPS	ALLOW VEL2 FPS	LINING TYPE	Q10 = C(I10)A CFS	CUM. Q10 CFS	ACTUAL VEL10 FPS	DEPTH FLOW 10 IN	REMARKS
21+80	22+80	L (DA 11)	0.17	5	0.41	0.41	0.013	0.05	1.21	2.5	GRASS	0.51	0.51	1.30	4.7	EXIST 1.5' ✓
23+20	24+60	L (DA 1)	0.11	5	0.26	[a] 3.44	0.009	0.05	1.90	2.5	GRASS	0.33	4.29	2.00	11	EXIST 1.2' ✓
25+90	24+60	L (DA 1)	0.07	5	0.17	0.17	0.009	0.05	0.088	2.5	GRASS	0.21	0.21	0.092	3.6	EXIST 1.5' ✓
25+90	27+88	L (DA 2)	0.61	5	1.47	1.47	0.01	0.05	1.60	2.5	GRASS	1.84	1.84	1.70	8	TYP. SECT
21+80	23+00	R (DA 10)	0.07	5	0.17	0.17	0.013	0.05	1.00	2.5	GRASS	0.21	0.21	1.10	3.4	EXIST 1.5' ✓
23+00	24+60	R (DA 5)	0.08	5	0.19	0.19	0.02	0.05	1.20	2.5	GRASS	0.24	0.24	1.30	3.2	EXIST ≈1.2' ✓
25+50	24+60	R (DA 5)	0.05	5	0.12	[b] 0.26	0.009	0.05	1.00	2.5	GRASS	0.15	0.33	1.05	4.3	EXIST ≈1.5' ✓
25+90	27+85	R (DA 2)	0.26	5	0.63	[c] 0.94	0.012	0.05	1.50	2.5	GRASS	0.78	1.17	1.60	6.5	EXIST ≈2' ✓

TO CHERRY WALK

a: Σ 0.41 + 0.26 + FLEETWD
b: Σ 0.12 + SHACK.
c: Σ 0.63 + SHACK.

ROADSIDE DITCH DESIGN

PROJECT MEADOWS-SECT IV-PH2 AES # 7820-2 DATE 11-20-96

ST. NAME FLEETWOOD LANE

C = 0.43

NORFOLK CURVE: $I_2 = 5.6$ IN/HR ; $I_{10} = 7$ IN/HR

TYPSECT : V DITCH W/ 3:1 & 2:1 SS; 1.5' DEEP

FROM STA (DIR OF	TO STA FLOW)	LEFT OR RIGHT	A AC	Tc MIN	Q2 = C(I2)A CFS	CUM. Q2 CFS	AVG SLOPE FT/FT	n	ACTUAL VEL2 FPS	ALLOW VEL2 FPS	LINING TYPE	Q10 = C(I10)A CFS	CUM. Q10 CFS	ACTUAL VEL10 FPS	DEPTH FLOW 10 IN	REMARKS
13+00	12+50	R (DA1)	0.47	5	1.13	1.13	0.01	0.05	1.41	2.5	GRASS	1.41	1.41	1.50	7.2	TYPSECT
12+50	11+50	R (DA1)	0.06	5	0.144	1.27	0.017	0.05	1.90	2.5	GRASS	0.18	1.59	2.0	6.8	"
11+50	10+25	R (DA1)	0.07	5	0.169	1.44	0.026	0.05	2.2	2.5	GRASS	0.21	1.80	2.3	6.6	" 1.2' (EXIST)
	(EXIST)															
13+00	12+50	L (DA11)	0.09	5	0.22	0.22	0.021	0.05	1.30	2.5	GRASS	0.27	0.27	1.35	3.4	TYPSECT
12+50	11+50	L (DA11)	0.21	5	0.51	0.73	0.019	0.05	1.65	2.5	GRASS	0.63	0.90	1.75	5.4	"
11+50	10+50	L (DA11)	0.23	5	0.55	1.28	0.02	0.05	2.00	2.5	GRASS	0.69	1.59	2.10	6.6	"
10+50	10+25	L (DA11)	0.02	5	0.05	1.33	0.032	0.05	2.40	2.5	GRASS	0.06	1.65	2.55	6.2	" 2' (EXIST)
	(EXIST)															

ROADSIDE DITCH DESIGN

PROJECT MEADOWS - SECT 4 - PH 2 AES # 7820-2 DATE 11-15-96

ST. NAME SHACKLETON LANE

C = 0.43

TYP SECT : V DITCH w/ 3:1 & 2:1 SS; 1.5' DEEP

$I_{2;10}$ - NORFOLK CURVE $I_2 = 5.6$ IN/HR $I_{10} = 7$ IN/HR

FROM STA (DIR OF	TO STA FLOW)	LEFT OR RIGHT	A AC	Tc MIN	Q2 = C(I2)A CFS	CUM. Q2 CFS	AVG SLOPE FT/FT	n	ACTUAL VEL2 FPS	ALLOW VEL2 FPS	LINING TYPE	Q10 = C(I10)A CFS	CUM. Q10 CFS	ACTUAL VEL10 FPS	DEPTH FLOW 10 IN	REMARKS
11+25	12+25	L (DA3)	0.11	5	0.27	0.27	0.018	0.05	1.30	2.5	GRASS	0.33	0.33	1.40	3.7	TYP SECT
12+25	13+25	L "	0.11	5	0.27	0.53	0.029	0.05	1.80	2.5	GRASS	0.33	0.66	1.95	4.4	TYP SECT
13+25	14+26	L "	0.20	5	0.48	1.01	0.014	0.05	1.55	2.5	GRASS	0.60	1.26	1.70	6.5	TYP SECT
11+25	12+25	R (DA4)	0.06	5	0.144	0.144	0.018	0.05	1.19	2.5	GRASS	0.18	0.18	1.2	2.9	TYP SECT
12+25	13+11	R "	0.05	5	0.12	0.26	0.029	0.05	1.55	2.5	GRASS	0.15	0.33	1.6	3.4	TYP SECT
13+11	14+26	R (DA3)	0.07	5	0.169	0.169	0.024	0.05	1.20	2.5	GRASS	0.21	0.21	1.30	2.9	TYP SECT
11+25	10+25	R (DA5)	0.06	5	0.14	0.14	0.026	0.05	1.22	2.5	GRASS	0.18	0.18	1.35	2.7	EXIST 2'-2.3' ≈
11+25	10+25	L (DA12)	0.13	5	0.31	0.31	0.02	0.05	1.35	2.5	GRASS	0.39	0.39	1.40	3.9	EXIST 1.7' ≈

MEADOWS, SECT 4, PHS 1-3

Storm Sewer System #1 Calculations

STORM SEWER DESIGN / ANALYSIS

Return Period = 10 Yrs
Rainfall file: jcc

Run Date: 08-04-1997
File: a:78201R2.ST3

LINE 1 / Q = 29.29 / HT = 30 / WID = 30 / N = .013 / L = 120 / JLC = .75

SS#1-2 - SS#1-1 / Outfall

	HGL	DEPTH	INVERT	VEL	EGL	T WID	COVER	AREA
DNSTRM	77.40	30.00	69.41	5.97	77.95	0.00	-2.41	4.91
UPSTRM	78.01	30.00	73.75	5.97	78.57	0.00	9.8	4.91

Drainage area (ac)	= 1.00	Slope of invert (%)	= 3.6167
Runoff coefficient	= 0.55	Slope energy grade line (%)	= 0.5103
Time of conc (min)	= 33.96	Critical depth (in)	= 21.70
Inlet time (min)	= 10.00	Natural ground elev. (ft)	= 86.05
Intensity (in/hr)	= 3.37	Upstream surcharge (ft)	= 1.76
Cumulative C*A	= 8.70	Additional Q (cfs)	= 0.00
Q = CA * I (cfs)	= 29.29	Line capacity (cfs)	= 77.99
Q catchment (cfs)	= 2.03	Inlet length (ft)	= 0.00
Q carryover (cfs)	= 36.71	Gutter slope (ft/ft)	= 0.0000
Q captured (cfs)	= 0.00	Cross slope (ft/ft)	= 0.0000
Q bypassed (cfs)	= 38.74	Ponding width (ft)	= N/A

LINE 2 / Q = 28.36 / HT = 30 / WID = 30 / N = .013 / L = 182 / JLC = .5

SS#1-3 - SS#1-2 / DNLN = 1

	HGL	DEPTH	INVERT	VEL	EGL	T WID	COVER	AREA
DNSTRM	78.43	30.00	73.75	5.78	78.95	0.00	9.8	4.91
UPSTRM	79.30	30.00	74.30	5.78	79.82	0.00	12.86	4.91

Drainage area (ac)	= 0.00	Slope of invert (%)	= 0.5769
Runoff coefficient	= 0.00	Slope energy grade line (%)	= 0.4782
Time of conc (min)	= 33.43	Critical depth (in)	= 21.35
Inlet time (min)	= 0.00	Natural ground elev. (ft)	= 90.17
Intensity (in/hr)	= 3.39	Upstream surcharge (ft)	= 2.00
Cumulative C*A	= 8.35	Additional Q (cfs)	= 0.00
Q = CA * I (cfs)	= 28.36	Line capacity (cfs)	= 31.15
Q catchment (cfs)	= 0.00	Inlet length (ft)	= 0.00
Q carryover (cfs)	= 36.71	Gutter slope (ft/ft)	= 0.0000
Q captured (cfs)	= 0.00	Cross slope (ft/ft)	= 0.0000
Q bypassed (cfs)	= 36.71	Ponding width (ft)	= N/A

LINE 3 / Q = 28.55 / HT = 30 / WID = 30 / N = .013 / L = 145 / JLC = .8

SS#1-4 - SS#1-3 / DNLN = 2

	HGL	DEPTH	INVERT	VEL	EGL	T WID	COVER	AREA
DNSTRM	79.56	30.00	74.80	5.82	80.08	0.00	12.86	4.91
UPSTRM	80.26	30.00	75.70	5.82	80.79	0.00	9.06	4.91

Drainage area (ac)	= 2.64	Slope of invert (%)	= 0.6207
Runoff coefficient	= 0.35	Slope energy grade line (%)	= 0.4848
Time of conc (min)	= 33.02	Critical depth (in)	= 21.42
Inlet time (min)	= 10.00	Natural ground elev. (ft)	= 87.27
Intensity (in/hr)	= 3.42	Upstream surcharge (ft)	= 2.06
Cumulative C*A	= 8.35	Additional Q (cfs)	= 0.00
Q = CA * I (cfs)	= 28.55	Line capacity (cfs)	= 32.31
Q catchment (cfs)	= 5.36	Inlet length (ft)	= 0.00
Q carryover (cfs)	= 31.34	Gutter slope (ft/ft)	= 0.0000
Q captured (cfs)	= 0.00	Cross slope (ft/ft)	= 0.0000
Q bypassed (cfs)	= 36.71	Ponding width (ft)	= N/A

LINE 4 / Q = 6.10 / HT = 15 / WID = 15 / N = .013 / L = 38 / JLC = .8

SS#1-4A - SS#1-4 / DNLN = 3

	HGL	DEPTH	INVERT	VEL	EGL	T WID	COVER	AREA
DNSTRM	82.05	11.86	81.06	5.86	82.58	13.34	4.75	1.04
UPSTRM	82.41	11.92	81.42	5.83	82.94	12.12	5.11	1.05

Drainage area (ac)	= 1.50	Slope of invert (%)	= 0.9474
Runoff coefficient	= 0.35	Slope energy grade line (%)	= 0.9469
Time of conc (min)	= 25.13	Critical depth (in)	= 11.86
Inlet time (min)	= 10.00	Natural ground elev. (ft)	= 87.78
Intensity (in/hr)	= 3.95	Upstream surcharge (ft)	= 0.00
Cumulative C*A	= 1.55	Additional Q (cfs)	= 0.00
Q = CA * I (cfs)	= 6.10	Line capacity (cfs)	= 6.29
Q catchment (cfs)	= 3.05	Inlet length (ft)	= 0.00
Q carryover (cfs)	= 4.04	Gutter slope (ft/ft)	= 0.0000
Q captured (cfs)	= 0.00	Cross slope (ft/ft)	= 0.0000
Q bypassed (cfs)	= 7.08	Ponding width (ft)	= N/A

LINE 5 / Q = 4.04 / HT = 15 / WID = 15 / N = .013 / L = 32 / JLC = .9

SS#1-4B - SS#1-4A / DNLN = 4

	HGL	DEPTH	INVERT	VEL	EGL	T WID	COVER	AREA
DNSTRM	82.84	15.00	81.42	3.29	83.00	0.00	5.11	1.23
UPSTRM	83.17	9.72	82.04	4.80	83.53	14.33	1.25	0.84

Drainage area (ac)	= 5.40	Slope of invert (%)	= 1.9375
Runoff coefficient	= 0.30	Slope energy grade line (%)	= 1.6420
Time of conc (min)	= 25.00	Critical depth (in)	= 9.65
Inlet time (min)	= 25.00	Natural ground elev. (ft)	= 82.04
Intensity (in/hr)	= 3.96	Upstream surcharge (ft)	= 0.00
Cumulative C*A	= 1.02	Additional Q (cfs)	= 0.00
Q = CA * I (cfs)	= 4.04	Line capacity (cfs)	= 8.99
Q catchment (cfs)	= 4.04	Inlet length (ft)	= 0.00
Q carryover (cfs)	= 0.00	Gutter slope (ft/ft)	= 0.0000
Q captured (cfs)	= 0.00	Cross slope (ft/ft)	= 0.0000
Q bypassed (cfs)	= 4.04	Ponding width (ft)	= N/A

LINE 6 / Q = 20.72 / HT = 30 / WID = 30 / N = .013 / L = 445 / JLC = .8

SS#1-5 - SS#1-4 / DNLN = 3

	HGL	DEPTH	INVERT	VEL	EGL	T WID	COVER	AREA
DNSTRM	80.68	30.00	75.70	4.22	80.96	0.00	9.06	4.91
UPSTRM	81.82	30.00	79.00	4.22	82.09	0.00	9.01	4.91

Drainage area (ac)	= 0.00	Slope of invert (%)	= 0.7416
Runoff coefficient	= 0.00	Slope energy grade line (%)	= 0.2554
Time of conc (min)	= 31.26	Critical depth (in)	= 18.25
Inlet time (min)	= 0.00	Natural ground elev. (ft)	= 90.51
Intensity (in/hr)	= 3.52	Upstream surcharge (ft)	= 0.32
Cumulative C*A	= 5.89	Additional Q (cfs)	= 0.00
Q = CA * I (cfs)	= 20.72	Line capacity (cfs)	= 35.32
Q catchment (cfs)	= 0.00	Inlet length (ft)	= 0.00
Q carryover (cfs)	= 24.26	Gutter slope (ft/ft)	= 0.0000
Q captured (cfs)	= 0.00	Cross slope (ft/ft)	= 0.0000
Q bypassed (cfs)	= 24.26	Ponding width (ft)	= N/A

LINE 7 / Q = 5.79 / HT = 15 / WID = 15 / N = .013 / L = 40 / JLC = .9

SS#1-5A - SS#1-5 / DNLN = 6

	HGL	DEPTH	INVERT	VEL	EGL	T WID	COVER	AREA
DNSTRM	88.20	8.28	87.51	8.33	89.28	14.92	1.75	0.69
UPSTRM	90.13	8.28	88.47	8.33	91.21	14.92	-1.25	0.69

Drainage area (ac)	= 3.75	Slope of invert (%)	= 2.4000
Runoff coefficient	= 0.35	Slope energy grade line (%)	= 4.8229
Time of conc (min)	= 20.00	Critical depth (in)	= 11.55
Inlet time (min)	= 20.00	Natural ground elev. (ft)	= 88.47
Intensity (in/hr)	= 4.41	Upstream surcharge (ft)	= 0.41
Cumulative C*A	= 1.31	Additional Q (cfs)	= 0.00
Q = CA * I (cfs)	= 5.79	Line capacity (cfs)	= 10.00
Q catchment (cfs)	= 5.79	Inlet length (ft)	= 0.00
Q carryover (cfs)	= 0.00	Gutter slope (ft/ft)	= 0.0000
Q captured (cfs)	= 0.00	Cross slope (ft/ft)	= 0.0000
Q bypassed (cfs)	= 5.79	Ponding width (ft)	= N/A

Note. Normal depth assumed

LINE 8 / Q = 16.14 / HT = 24 / WID = 24 / N = .013 / L = 47 / JLC = .8

SS#1-6 - SS#1-5 / DNLN = 6

	HGL	DEPTH	INVERT	VEL	EGL	T WID	COVER	AREA
DNSTRM	82.04	24.00	79.00	5.14	82.45	0.00	9.51	3.14
UPSTRM	82.28	24.00	79.44	5.14	82.69	0.00	8.47	3.14

Drainage area (ac)	= 0.00	Slope of invert (%)	= 0.9362
Runoff coefficient	= 0.00	Slope energy grade line (%)	= 0.5096
Time of conc (min)	= 31.11	Critical depth (in)	= 17.07
Inlet time (min)	= 0.00	Natural ground elev. (ft)	= 89.91
Intensity (in/hr)	= 3.53	Upstream surcharge (ft)	= 0.84
Cumulative C*A	= 4.57	Additional Q (cfs)	= 0.00
Q = CA * I (cfs)	= 16.14	Line capacity (cfs)	= 21.88
Q catchment (cfs)	= 0.00	Inlet length (ft)	= 0.00
Q carryover (cfs)	= 18.47	Gutter slope (ft/ft)	= 0.0000
Q captured (cfs)	= 0.00	Cross slope (ft/ft)	= 0.0000
Q bypassed (cfs)	= 18.47	Ponding width (ft)	= N/A

LINE 9 / Q = 2.72 / HT = 15 / WID = 15 / N = .013 / L = 35 / JLC = .9

SS#1-6A - SS#1-6 / DNLN = 8

	HGL	DEPTH	INVERT	VEL	EGL	T WID	COVER	AREA
DNSTRM	87.29	4.61	86.91	8.51	88.42	13.84	1.75	0.32
UPSTRM	89.87	4.61	88.47	8.51	90.99	13.84	-1.28	0.32

Drainage area (ac)	= 1.34	Slope of invert (%)	= 4.4571
Runoff coefficient	= 0.35	Slope energy grade line (%)	= 7.3482
Time of conc (min)	= 10.00	Critical depth (in)	= 7.92
Inlet time (min)	= 10.00	Natural ground elev. (ft)	= 88.47
Intensity (in/hr)	= 5.81	Upstream surcharge (ft)	= 0.15
Cumulative C*A	= 0.47	Additional Q (cfs)	= 0.00
Q = CA * I (cfs)	= 2.72	Line capacity (cfs)	= 13.63
Q catchment (cfs)	= 2.72	Inlet length (ft)	= 0.00
Q carryover (cfs)	= 0.00	Gutter slope (ft/ft)	= 0.0000
Q captured (cfs)	= 0.00	Cross slope (ft/ft)	= 0.0000
Q bypassed (cfs)	= 2.72	Ponding width (ft)	= N/A

Note: Normal depth assumed

LINE 10 / Q = 14.74 / HT = 24 / WID = 24 / N = .013 / L = 278 / JLC = .8

SS#1-7 - SS#1-6 / DNLN = 8

	HGL	DEPTH	INVERT	VEL	EGL	T WID	COVER	AREA
DNSTRM	82.61	24.00	79.44	4.69	82.95	0.00	8.47	3.14
UPSTRM	83.73	23.73	81.75	4.70	84.07	5.08	3	3.14

Drainage area (ac)	= 0.00	Slope of invert (%)	= 0.8309
Runoff coefficient	= 0.00	Slope energy grade line (%)	= 0.4038
Time of conc (min)	= 30.13	Critical depth (in)	= 10.31
Inlet time (min)	= 0.00	Natural ground elev (ft)	= 88.75
Intensity (in/hr)	= 3.59	Upstream surcharge (ft)	= 0.00
Cumulative C*A	= 4.10	Additional Q (cfs)	= 0.00
Q = CA * I (cfs)	= 14.74	Line capacity (cfs)	= 20.62
Q catchment (cfs)	= 0.00	Inlet length (ft)	= 0.00
Q carryover (cfs)	= 15.75	Gutter slope (ft/ft)	= 0.0000
Q captured (cfs)	= 0.00	Cross slope (ft/ft)	= 0.0000
Q bypassed (cfs)	= 15.75	Ponding width (ft)	= N/A

LINE 11 / Q = 4.94 / HT = 15 / WID = 15 / N = .013 / L = 35 / JLC = .9

SS#1-7A - SS#1-7 / DNLN = 10

	HGL	DEPTH	INVERT	VEL	EGL	T WID	COVER	AREA
DNSTRM	84.00	15.00	81.75	4.02	84.25	0.00	3.75	1.23
UPSTRM	86.01	10.67	84.73	5.29	86.44	13.60	-1.25	0.93

Drainage area (ac)	= 4.57	Slope of invert (%)	= 8.5143
Runoff coefficient	= 0.30	Slope energy grade line (%)	= 6.2589
Time of conc (min)	= 30.00	Critical depth (in)	= 10.67
Inlet time (min)	= 30.00	Natural ground elev. (ft)	= 84.73
Intensity (in/hr)	= 3.60	Upstream surcharge (ft)	= 0.03
Cumulative C*A	= 1.37	Additional Q (cfs)	= 0.00
Q = CA * I (cfs)	= 4.94	Line capacity (cfs)	= 18.84
Q catchment (cfs)	= 4.94	Inlet length (ft)	= 0.00
Q carryover (cfs)	= 0.00	Gutter slope (ft/ft)	= 0.0000
Q captured (cfs)	= 0.00	Cross slope (ft/ft)	= 0.0000
Q bypassed (cfs)	= 4.94	Ponding width (ft)	= N/A

LINE 12 / Q = 10.79 / HT = 18 / WID = 18 / N = .013 / L = 60 / JLC = .8

SS#1-8 - SS#1-7 / DNLN = 10

	HGL	DEPTH	INVERT	VEL	EGL	T WID	COVER	AREA
DNSTRM	84.00	18.00	81.75	6.11	84.58	0.00	3.5	1.77
UPSTRM	84.64	18.00	82.91	6.10	85.21	0.00	.4	1.77

Drainage area (ac)	= 4.14	Slope of invert (%)	= 1.9333
Runoff coefficient	= 0.30	Slope energy grade line (%)	= 1.0555
Time of conc (min)	= 25.13	Critical depth (in)	= 15.04
Inlet time (min)	= 25.00	Natural ground elev. (ft)	= 84.82
Intensity (in/hr)	= 3.95	Upstream surcharge (ft)	= 0.23
Cumulative C*A	= 2.73	Additional Q (cfs)	= 0.00
Q = CA * I (cfs)	= 10.79	Line capacity (cfs)	= 14.60
Q catchment (cfs)	= 4.91	Inlet length (ft)	= 0.00
Q carryover (cfs)	= 5.90	Gutter slope (ft/ft)	= 0.0000
Q captured (cfs)	= 0.00	Cross slope (ft/ft)	= 0.0000
Q bypassed (cfs)	= 10.81	Ponding width (ft)	= N/A

LINE 13 / Q = 5.90 / HT = 15 / WID = 15 / N = .013 / L = 40 / JLC = .9

SS#1-8A - SS#1-8 / DNLN = 12

	HGL	DEPTH	INVERT	VEL	EGL	T WID	COVER	AREA
DNSTRM	85.10	15.00	82.91	4.81	85.46	0.00	.65	1.23
UPSTRM	86.17	11.66	84.73	5.76	86.68	12.48	-1.25	1.02

Drainage area (ac)	= 4.97	Slope of invert (%)	= 4.5500
Runoff coefficient	= 0.30	Slope energy grade line (%)	= 1.9004
Time of conc (min)	= 25.00	Critical depth (in)	= 11.66
Inlet time (min)	= 25.00	Natural ground elev. (ft)	= 84.73
Intensity (in/hr)	= 3.96	Upstream surcharge (ft)	= 0.19
Cumulative C*A	= 1.49	Additional Q (cfs)	= 0.00
Q = CA * I (cfs)	= 5.90	Line capacity (cfs)	= 13.77
Q catchment (cfs)	= 5.90	Inlet length (ft)	= 0.00
Q carryover (cfs)	= 0.00	Gutter slope (ft/ft)	= 0.0000
Q captured (cfs)	= 0.00	Cross slope (ft/ft)	= 0.0000
Q bypassed (cfs)	= 5.90	Ponding width (ft)	= N/A

Roadside Ditch Calculations

ROADSIDE DITCH DESIGN

PROJECT Meadows Sect IV Ph3 AES # 7820-3 DATE 4-2-97

REVISED 8-4-97 PER JCC 5-23-97 COMMENTS

ST. NAME Cherry Walk

C = 0.43

FROM STA (DIR OF	TO STA FLOW)	LEFT OR RIGHT	A AC	Tc MIN	Q2 = C(I2)A CFS	CUM. Q2 CFS	AVG SLOPE FT/FT	n	ACTUAL VEL2 FPS	ALLOW VEL2 FPS	LINING TYPE	Q10 = C(I10)A CFS	CUM. Q10 CFS	ACTUAL VEL10 FPS	DEPTH FLOW 10 IN	REMARKS
17+00	14+00	RT ↘	1.2	10	2.4	2.4	0.0077	0.05	1.6	2.5	GRASS	3.1	3.1	1.7	10.2	TYP SECT ✓
14+00	10+55	RT ↘	0.7	10	1.4	3.8	0.0077	0.05	1.8	2.5	GRASS	1.8	4.9	1.9	12	"
21+73 (MILDEN)	10+55	RT ↘	0.2	10	0.4	0.4	0.015	0.05	1.3	2.5	GRASS	0.5	0.5	1.4	4.5	"
17+00	10+55	LFT ↘	0.4	5	0.9	0.9	0.0081	0.05	1.3	2.5	GRASS	1.2	1.2	1.4	7	TYP SECT ✓
10+55	24+60 (MILDEN)	LFT ↘	0.1	5	0.2	5.3	0.009	0.05	2.1	2.5	GRASS	0.6	7.2	2.2	13	"
17+00	22+42	RT ↘	2.2	15	3.8	3.8	0.016	0.05	2.4	2.5	GRASS	5.0	5.0	2.6	10.8	TYP SECT ✓
22+42	26+12	RT ↘	0.8	10	1.6	10.4	0.262	0.015	2.7	—	PAVED	2.0	13.6	2.8	9	PAVED: 1' DEEP
~~17+00~~	~~26+12~~	~~LFT~~	~~0.5~~	~~5~~	~~1.2~~	~~1.2~~	~~0.0197~~	~~0.05~~	~~1.9~~	~~2.5~~	~~GRASS~~	~~1.5~~	~~1.5~~	~~2.0~~	~~6.5~~	~~TYP SECT ✓~~
17+00	23+55	LFT	0.4	5	0.96	0.96	0.0157	0.05	1.8	2.5	GRASS	1.2	1.2	1.9	6	TYP SECT ✓
23+55	26+12	LFT	2.4	15	3.9	4.9	0.0267	0.015	7.9	—	PAVED	5.2	6.4	3.3	6.5	PAVED: 1' DEEP

(TOTAL OF 0.5 ROW DA & 2.3 DA)

ROADSIDE DITCH DESIGN

PROJECT Meadows-Sect IV-Ph 3 AES # 7820-3 DATE 4.2.97

ST. NAME Flavia's Court

C = 0.43

FROM STA (DIR OF	TO STA FLOW)	LEFT OR RIGHT	A AC	Tc MIN	Q2 = C(I2)A CFS	CUM. Q2 CFS	AVG SLOPE FT/FT	n	ACTUAL VEL2 FPS	ALLOW VEL2 FPS	LINING TYPE	Q10 = C(I10)A CFS	CUM. Q10 CFS	ACTUAL VEL10 FPS	DEPTH FLOW 10 IN	REMARKS
12+98	10+30	RT	2.3	15	4.0	4.0	0.0162	0.05	2.4	2.5	GRASS	5.2	5.2	2.6	10	TYPSECT ✓
12+98	10+30	LFT	0.6	15	1.0	1.0	0.01	0.05	1.4	2.5	GRASS	1.4	1.4	1.6	7.3	TYP SECT ✓

Culvert Calculations

LD-269
Rev 3-83

Project Meadows - Section IV - Ph 3
Culvert #1 - Cherry Walk & Flavia's Ct

Plan Sheet No. 5 Designer DPW
Rev. Date _____ Date 3·28·96

Sheet 1 of 3
NO REVISION

HYDROLOGICAL DATA:

D.A. = 4.5 AC.

T_c = 15 MIN
C = 0.43
i_2 = 4.0 in/hr
i_{10} = 5.3 in/hr

Q = CiA
Q_2 = 7.7 CFS
Q_{10} = 10.3 CFS

AHW Controls

STATION 10 + 30

100 yr. Flood plain _____ elev. _____
Design AHW depth _____ elev. _____
Structures _____ elev. _____

freq. T W elev.

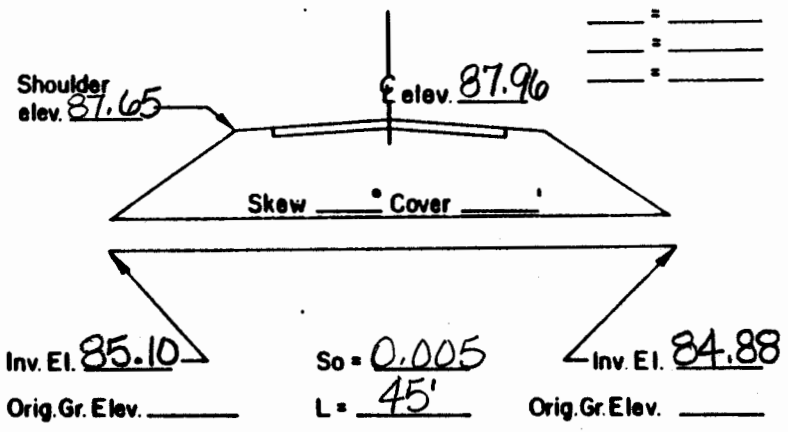

DISCHARGES USED

Q 2 = 7.7 CFS
Q 10 = 10.3 CFS
Q ____ = ____ CFS
Q ____ = ____ CFS
Q ____ = ____ CFS

RISK ASSESSMENT ADT _____

Detours Available _____, Length _____
Overtopping Stage _____
Flood Plain Management _____
Criteria and Significant Impact _____

240 A

CULVERT TYPE & SIZE	Q	Q/B	HEADWATER COMPUTATIONS: INLET CONT. HW/D	INLET CONT. HW	OUTLET CONTROL Ke	dc	$\frac{dc+D}{2}$	ho	H	LSo	HW	CONT. HW. ELEV.	OUTLET VELOCITY C.M.	OUTLET VELOCITY Smooth	End Treat.	COMMENTS
18" RCP	10.3		1.38	2.07	0.5	1.25	1.38	1.38	.64	.22	1.8					INLET CONTROLS W/ 9" FREEBOARD

$$H = \left(1 + k_e + \frac{29 n^2 L}{R^{1.33}}\right)\frac{V^2}{2g}$$

n = .013
L = 45'
V = 4.2 fps
R = .37

Design Flood Exceed Prob. _____ Elev _____
Overtop Flood Exceed Prob. _____ Elev _____
Base Flood 1% Exceed Prob _____ Elev _____

LD-269
Rev 3-83

Project: Meadows-Section IV-Ph3
Culvert #2 - Cherry Walk @ Old Field Rd

Plan Sheet No. 5 Designer DPW
Rev. Date 8/97 Date

Sheet 2 of 3
REVISED PER JCC 5-23-97 LTR

STATION 26+11

HYDROLOGICAL DATA:

D.A. = 1.9 AC. 4.5

T_c = 15 MIN 20

C = 0.43

i_2 = 4.0 in/hr 3.3

i_{10} = 5.3 in/hr 4.4

$Q = CiA$

~~Q_2 = 3.3 cfs~~ Q_2 = 6.4 cfs

~~Q_{10} = 4.3 cfs~~ Q_{10} = 8.5 cfs

AHW Controls

100 yr. Flood plain _____ elev. _____
Design AHW depth _____ elev. _____
Structures _____ elev. _____

freq. TW elev.

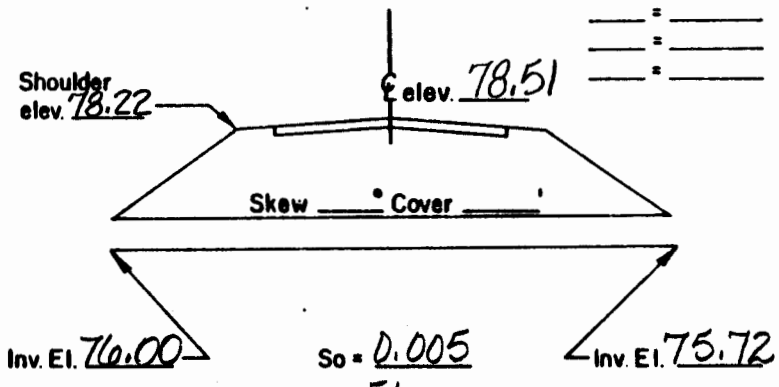

DISCHARGES USED

Q 2 = 3.3 CFS
Q 10 = 4.3 CFS
Q ____ = ____ CFS
Q 10 = 8.5 CFS
Q ____ = ____ CFS

RISK ASSESSMENT ADT _____

Detours Available _____, Length _____
Overtopping Stage _____
Flood Plain Management _____
Criteria and Significant Impact _____

240 A

CULVERT TYPE & SIZE	Q	Q/B	HEADWATER COMPUTATIONS: INLET CONT. HW/D	INLET CONT. HW	OUTLET CONTROL Ke	dc	(dc+D)/2	ho	H	LSo	HW	CONT. HW. ELEV.	OUTLET VELOCITY C.M.	OUTLET VELOCITY Smooth	End Treat.	COMMENTS
15" RCP	4.3		1.00	1.25	0.5	0.8	1.02	1.02	.45	.28	1.19					INLET CONTROLS W/
REVISION:																12" FREEBOARD
15" RCP	8.5		1.9	2.4	0.5	1.1	1.17	1.17	1.8	.28	2.7					CONTROLS ARE NEARLY
																EQUAL

Design Flood Exceed Prob. _____ Elev _____
Overtop Flood Exceed Prob. _____ Elev _____
Base Flood 1% Exceed Prob _____ Elev _____

LD-269
Rev 3-83

Project Meadows - Section IV - Ph 3
@ Cherry Walk & Milden Road Culvert #3

Plan Sheet No. 4 Designer _____
Rev. Date _____ Date 4.3.97

Sheet 3 of 3
NO REVISION

HYDROLOGICAL DATA:
D.A. = 2.1 AC.
T_c = 10 MIN

$Q = CiA$
i_{10} = 6.0 in/hr
C = 0.43

AHW Controls
100 yr. Flood plain _____ elev. _____
Design AHW depth _____ elev. _____
Structures _____ elev. _____

STATION _____

freq. TW elev.
___ = ___
___ = ___
___ = ___
___ = ___
___ = ___

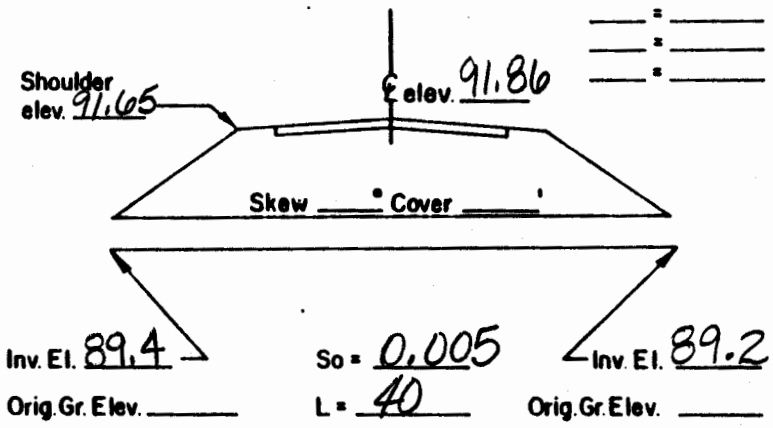

DISCHARGES USED
Q 10 = 5.42 CFS
Q ___ = _____ CFS
Q ___ = _____ CFS
Q ___ = _____ CFS
Q ___ = _____ CFS

RISK ASSESSMENT
ADT _____
Detours Available _____, Length _____
Overtopping Stage _____
Flood Plain Management _____
Criteria and Significant Impact _____

240 A

CULVERT TYPE & SIZE	Q	Q/B	HEADWATER COMPUTATIONS									CONT. HW. ELEV.	OUTLET VELOCITY		End Treat.	COMMENTS
			INLET CONT.		OUTLET CONTROL											
			HW/D	HW	Ke	dc	$\frac{dc+D}{2}$	ho	H	LSo	HW		C.M.	Smooth		
15" RCP	5.42		1.17	1.46	0.5	0.9	1.07	1.07	.35	.20	1.22					INLET CONTROLS w/ 12" FREEBOARD

$$H = \left(1 + K_e + \frac{29 n^2 L}{R^{1.33}}\right)\frac{V^2}{2g}$$

n = 0.013
L = 40'
V = 3.03 fps
R = .31

Design Flood Exceed Prob. _____ Elev _____
Overtop Flood Exceed Prob. _____ Elev _____
Base Flood 1% Exceed Prob. _____ Elev _____

STORM SEWER SYSTEM #1 REVISIONS

The existing storm sewer system has been expanded to accommodate the redirected flow from Phase III. This expansion includes three new structures and two new pipes. Two drop inlets (#5) are to be installed along the future Cherry Walk road and a straddle manhole will be installed onto the existing 30" pipe between structures SS #1-5 and SS #1-4. The attached computer generated calculations prove the adequacy of the existing system.

Rainfall file: JCC [redacted] 10 Yr) [redacted] SS#1-2 - SS#1-1

LINE 1 / Q = 31.8 / HT = 30 / WID = 30 / N = .013 / L = 120 / JLC = .75

OUTFALL

	HGL	DEPTH	INVERT	VEL	EGL	T WID	COVER	AREA
DNSTRM	77.40	30.00	69.41	6.49	78.05	0.00	-2.41	4.91
UPSTRM	78.12	30.00	73.75	6.48	78.78	0.00	9.8	4.91

Drainage area (ac)	= 0.87	Slope of invert (%)	= 3.6167
Runoff coefficient	= 0.35	Slope energy grade line (%)	= 0.6024
Time of conc (min)	= 33.82	Critical depth (in)	= 22.62
Inlet time (min)	= 10.00	Natural ground elevation	= 86.05
Intensity (in/hr)	= 3.37	Upstream surcharge (ft)	= 1.87
Cumulative C*A	= 9.44	Additional Q (cfs)	= 0.00
Q = CA * I (cfs)	= 31.83	Line capacity (cfs)	= 77.99
Q catchment (cfs)	= 1.77	Inlet length (ft)	= 0.00
Q carryover (cfs)	= 40.88	Gutter slope (ft/ft)	= 0.0000
Q captured (cfs)	= 0.00	Cross slope (ft/ft)	= 0.0000
Q bypassed (cfs)	= 42.65	Ponding width (ft)	= N/A

[PgUp] [PgDn] [Home] [End] [P] [D] [Esc]

MW

Rainfall file: JCC (10 Yr) SS#1-3 - SS#1-2

LINE 2 / Q = 31.0 / HT = 30 / WID = 30 / N = .013 / L = 182 / JLC = .5

DNLN = 1

	HGL	DEPTH	INVERT	VEL	EGL	T WID	COVER	AREA
DNSTRM	78.61	30.00	73.75	6.33	79.23	0.00	9.8	4.91
UPSTRM	79.66	30.00	74.80	6.32	80.28	0.00	12.86	4.91

Drainage area (ac)	= 0.00	Slope of invert (%)	= 0.5769
Runoff coefficient	= 0.00	Slope energy grade line (%)	= 0.5731
Time of conc (min)	= 33.34	Critical depth (in)	= 22.34
Inlet time (min)	= 0.00	Natural ground elevation	= 90.17
Intensity (in/hr)	= 3.40	Upstream surcharge (ft)	= 2.36
Cumulative C*A	= 9.13	Additional Q (cfs)	= 0.00
Q = CA * I (cfs)	= 31.05	Line capacity (cfs)	= 31.15
Q catchment (cfs)	= 0.00	Inlet length (ft)	= 0.00
Q carryover (cfs)	= 40.88	Gutter slope (ft/ft)	= 0.0000
Q captured (cfs)	= 0.00	Cross slope (ft/ft)	= 0.0000
Q bypassed (cfs)	= 40.88	Ponding width (ft)	= N/A

[PgUp] [PgDn] [Home] [End] [P] [D] [Esc]

Rainfall file: JCC (10 Yr) SS#1-4 - SS#1-3

LINE 3 / Q = 31.2 / HT = 30 / WID = 30 / N = .013 / L = 145 / JLC = .8

DNLN = 2

	HGL	DEPTH	INVERT	VEL	EGL	T WID	COVER	AREA
DNSTRM	79.97	30.00	74.80	6.37	80.60	0.00	12.86	4.91
UPSTRM	80.81	30.00	75.70	6.36	81.44	0.00	9.06	4.91

Drainage area (ac)	= 2.24	Slope of invert (%)	= 0.6207
Runoff coefficient	= 0.35	Slope energy grade line (%)	= 0.5804
Time of conc (min)	= 32.96	Critical depth (in)	= 22.41
Inlet time (min)	= 10.00	Natural ground elevation	= 87.27
Intensity (in/hr)	= 3.42	Upstream surcharge (ft)	= 2.61
Cumulative C*A	= 9.13	Additional Q (cfs)	= 0.00
Q = CA * I (cfs)	= 31.24	Line capacity (cfs)	= 32.31
Q catchment (cfs)	= 4.55	Inlet length (ft)	= 0.00
Q carryover (cfs)	= 36.33	Gutter slope (ft/ft)	= 0.0000
Q captured (cfs)	= 0.00	Cross slope (ft/ft)	= 0.0000
Q bypassed (cfs)	= 40.88	Ponding width (ft)	= N/A

[PgUp] [PgDn] [Home] [End] [P] [D] [Esc]

Rainfall file: JCC (10 Yr) SS#1-4A - SS#1-4

LINE 4 / Q = 6.1 / HT = 15 / WID = 15 / N = .013 / L = 38 / JLC = .8

DNLN = 3

	HGL	DEPTH	INVERT	VEL	EGL	T WID	COVER	AREA
DNSTRM	82.05	11.86	81.06	5.86	82.58	13.34	4.95	1.04
UPSTRM	82.41	11.92	81.42	5.83	82.94	12.12	5.11	1.05

Drainage area (ac)	= 1.50		Slope of invert (%)	= 0.9474
Runoff coefficient	= 0.35		Slope energy grade line (%)	= 0.9469
Time of conc (min)	= 25.13		Critical depth (in)	= 11.86
Inlet time (min)	= 10.00	.72	Natural ground elevation	= 87.78
Intensity (in/hr)	= 3.95	+.78	Upstream surcharge (ft)	= 0.00
Cumulative C*A	= 1.55		Additional Q (cfs)	= 0.00
Q = CA * I (cfs)	= 6.10	1.50	Line capacity (cfs)	= 6.29
Q catchment (cfs)	= 3.05		Inlet length (ft)	= 0.00
Q carryover (cfs)	= 4.04		Gutter slope (ft/ft)	= 0.0000
Q captured (cfs)	= 0.00		Cross slope (ft/ft)	= 0.0000
Q bypassed (cfs)	= 7.08		Ponding width (ft)	= N/A

[PgUp] [PgDn] [Home] [End] [P] [D] [Esc]

Rainfall file: JCC (10 Yr) SS#1-4B - SS#1-4A

LINE 5 / Q = 4.0 / HT = 15 / WID = 15 / N = .013 / L = 32 / JLC = .9

DNLN = 4

	HGL	DEPTH	INVERT	VEL	EGL	T WID	COVER	AREA
DNSTRM	82.84	15.00	81.42	3.29	83.00	0.00	5.11	1.23
UPSTRM	83.17	9.72	82.04	4.80	83.53	14.33	-1.25	0.84

Drainage area (ac)	= 3.40	Slope of invert (%)	= 1.9375
Runoff coefficient	= 0.30	Slope energy grade line (%)	= 1.6420
Time of conc (min)	= 25.00	Critical depth (in)	= 9.65
Inlet time (min)	= 25.00	Natural ground elevation	= 82.04
Intensity (in/hr)	= 3.96	Upstream surcharge (ft)	= 0.00
Cumulative C*A	= 1.02	Additional Q (cfs)	= 0.00
Q = CA * I (cfs)	= 4.04	Line capacity (cfs)	= 8.99
Q catchment (cfs)	= 4.04	Inlet length (ft)	= 0.00
Q carryover (cfs)	= 0.00	Gutter slope (ft/ft)	= 0.0000
Q captured (cfs)	= 0.00	Cross slope (ft/ft)	= 0.0000
Q bypassed (cfs)	= 4.04	Ponding width (ft)	= N/A

[PgUp] [PgDn] [Home] [End] [P] [D] [Esc]

H.H.

Rainfall file: JCC (10 Yr) SS#1-9 - SS#1-4

LINE 6 / Q = 23.5 / HT = 30 / WID = 30 / N = .013 / L = 132 / JLC = .9

DNLN = 3

	HGL	DEPTH	INVERT	VEL	EGL	T WID	COVER	AREA
DNSTRM	81.31	30.00	75.70	4.78	81.67	0.00	9.06	4.91
UPSTRM	81.74	30.00	76.70	4.78	82.10	0.00	11.94	4.91

Drainage area (ac)	= 0.00	Slope of invert (%)	= 0.7576
Runoff coefficient	= 0.00	Slope energy grade line (%)	= 0.3271
Time of conc (min)	= 32.50	Critical depth (in)	= 19.42
Inlet time (min)	= 0.00	Natural ground elevation	= 91.14
Intensity (in/hr)	= 3.45	Upstream surcharge (ft)	= 2.54
Cumulative C*A	= 6.80	Additional Q (cfs)	= 0.00
Q = CA * I (cfs)	= 23.45	Line capacity (cfs)	= 35.70
Q catchment (cfs)	= 0.00	Inlet length (ft)	= 0.00
Q carryover (cfs)	= 29.24	Gutter slope (ft/ft)	= 0.0000
Q captured (cfs)	= 0.00	Cross slope (ft/ft)	= 0.0000
Q bypassed (cfs)	= 29.24	Ponding width (ft)	= N/A

[PgUp] [PgDn] [Home] [End] [P] [D] [Esc]

Rainfall file: JCC (10 Yr) SS#1-5 - SS#1-9

LINE 7 / Q = 20.7 / HT = 30 / WID = 30 / N = .013 / L = 313 / JLC = .8

DNLN = 6

	HGL	DEPTH	INVERT	VEL	EGL	T WID	COVER	AREA
DNSTRM	82.06	30.00	76.70	4.22	82.34	0.00	11.94	4.91
UPSTRM	82.86	30.00	79.00	4.22	83.14	0.00	9.01	4.91

Drainage area (ac)	= 0.00	Slope of invert (%)	= 0.7348
Runoff coefficient	= 0.00	Slope energy grade line (%)	= 0.2554
Time of conc (min)	= 31.27	Critical depth (in)	= 18.25
Inlet time (min)	= 0.00	Natural ground elevation	= 90.51
Intensity (in/hr)	= 3.52	Upstream surcharge (ft)	= 1.36
Cumulative C*A	= 5.89	Additional Q (cfs)	= 0.00
Q = CA * I (cfs)	= 20.72	Line capacity (cfs)	= 35.16

Q catchment (cfs)	= 0.00	Inlet length (ft)	= 0.00
Q carryover (cfs)	= 24.26	Gutter slope (ft/ft)	= 0.0000
Q captured (cfs)	= 0.00	Cross slope (ft/ft)	= 0.0000
Q bypassed (cfs)	= 24.26	Ponding width (ft)	= N/A

[PgUp] [PgDn] [Home] [End] [P] [D] [Esc]

Rainfall file: JCC (10 Yr) SS#1-10 - SS#1-9

LINE 8 / Q = 4.6 / HT = 15 / WID = 15 / N = .013 / L = 150 / JLC = .8

DNLN = 6

	HGL	DEPTH	INVERT	VEL	EGL	T WID	COVER	AREA
DNSTRM	82.06	15.00	76.70	3.72	82.28	0.00	13.19	1.23
UPSTRM	84.17	10.25	83.32	5.10	84.58	13.95	3.62	0.89

Drainage area (ac)	= 0.40	Slope of invert (%)	= 4.4133
Runoff coefficient	= 0.50	Slope energy grade line (%)	= 1.5344
Time of conc (min)	= 15.19	Critical depth (in)	= 10.25
Inlet time (min)	= 5.00	Natural ground elevation	= 88.20
Intensity (in/hr)	= 4.97	Upstream surcharge (ft)	= 0.00
Cumulative C*A	= 0.92	Additional Q (cfs)	= 0.00
Q = CA * I (cfs)	= 4.56	Line capacity (cfs)	= 13.57

Q catchment (cfs)	= 1.40	Inlet length (ft)	= 0.00
Q carryover (cfs)	= 3.59	Gutter slope (ft/ft)	= 0.0000
Q captured (cfs)	= 0.00	Cross slope (ft/ft)	= 0.0000
Q bypassed (cfs)	= 4.98	Ponding width (ft)	= N/A

[PgUp] [PgDn] [Home] [End] [P] [D] [Esc]

Rainfall file: JCC (10 Yr)] [D] SS#1-10A -SS#1-10

LINE 9 / Q = 3.6 / HT = 15 / WID = 15 / N = .013 / L = 44 / JLC = .8

DNLN = 8

	HGL	DEPTH	INVERT	VEL	EGL	T WID	COVER	AREA
DNSTRM	84.50	14.13	83.32	2.99	84.64	14.56	3.62	1.20
UPSTRM	85.22	9.09	84.20	4.61	85.55	14.66	2.75	0.78

Drainage area (ac) =	2.05	Slope of invert (%)	= 2.0000
Runoff coefficient =	0.35	Slope energy grade line (%)	= 2.0780
Time of conc (min) =	15.00	Critical depth (in)	= 9.09
Inlet time (min) =	15.00	Natural ground elevation	= 88.20
Intensity (in/hr) =	5.00	Upstream surcharge (ft)	= 0.00
Cumulative C*A =	0.72	Additional Q (cfs)	= 0.00
Q = CA * I (cfs) =	3.59	Line capacity (cfs)	= 9.13
Q catchment (cfs) =	3.59	Inlet length (ft)	= 0.00
Q carryover (cfs) =	0.00	Gutter slope (ft/ft)	= 0.0000
Q captured (cfs) =	0.00	Cross slope (ft/ft)	= 0.0000
Q bypassed (cfs) =	3.59	Ponding width (ft)	= N/A

1.14
+.91
2.05

[PgUp] [PgDn] [Home] [End] [P] [D] [Esc]

Rainfall file: JCC (10 Yr) SS#1-5A - SS#1-5

LINE 10 / Q = 5.8 / HT = 15 / WID = 15 / N = .013 / L = 40 / JLC = .9

DNLN = 7

	HGL	DEPTH	INVERT	VEL	EGL	T WID	COVER	AREA
DNSTRM	88.20	8.28	87.51	8.33	89.28	14.92	1.75	0.69
UPSTRM	90.13	8.28	88.47	8.33	91.21	14.92	-1.25	0.69

Drainage area (ac) =	3.75	Slope of invert (%)	= 2.4000
Runoff coefficient =	0.35	Slope energy grade line (%)	= 4.8229
Time of conc (min) =	20.00	Critical depth (in)	= 11.55
Inlet time (min) =	20.00	Natural ground elevation	= 88.47
Intensity (in/hr) =	4.41	Upstream surcharge (ft)	= 0.41
Cumulative C*A =	1.31	Additional Q (cfs)	= 0.00
Q = CA * I (cfs) =	5.79	Line capacity (cfs)	= 10.00
Q catchment (cfs) =	5.79	Inlet length (ft)	= 0.00
Q carryover (cfs) =	0.00	Gutter slope (ft/ft)	= 0.0000
Q captured (cfs) =	0.00	Cross slope (ft/ft)	= 0.0000
Q bypassed (cfs) =	5.79	Ponding width (ft)	= N/A
		Note: Normal depth assumed	

[PgUp] [PgDn] [Home] [End] [P] [D] [Esc]

NOT ON PLAN

Rainfall file: JCC (10 Yr) SS#1-6 - SS#1-5

LINE 11 / Q = 16.1 / HT = 24 / WID = 24 / N = .013 / L = 47 / JLC = .8

DNLN = 7

	HGL	DEPTH	INVERT	VEL	EGL	T WID	COVER	AREA
DNSTRM	83.08	24.00	79.00	5.14	83.49	0.00	9.51	3.14
UPSTRM	83.32	24.00	79.44	5.14	83.73	0.00	8.47	3.14

Drainage area (ac)	= 0.00	Slope of invert (%)	= 0.9362
Runoff coefficient	= 0.00	Slope energy grade line (%)	= 0.5096
Time of conc (min)	= 31.11	Critical depth (in)	= 17.07
Inlet time (min)	= 0.00	Natural ground elevation	= 89.91
Intensity (in/hr)	= 3.53	Upstream surcharge (ft)	= 1.88
Cumulative C*A	= 4.57	Additional Q (cfs)	= 0.00
Q = CA * I (cfs)	= 16.14	Line capacity (cfs)	= 21.88
Q catchment (cfs)	= 0.00	Inlet length (ft)	= 0.00
Q carryover (cfs)	= 18.47	Gutter slope (ft/ft)	= 0.0000
Q captured (cfs)	= 0.00	Cross slope (ft/ft)	= 0.0000
Q bypassed (cfs)	= 18.47	Ponding width (ft)	= N/A

[PgUp] [PgDn] [Home] [End] [P] [D] [Esc]

NOT ON PLAN

Rainfall file: JCC (10 Yr) SS#1-6A - SS#1-6

LINE 12 / Q = 2.7 / HT = 15 / WID = 15 / N = .013 / L = 35 / JLC = .9

DNLN = 11

	HGL	DEPTH	INVERT	VEL	EGL	T WID	COVER	AREA
DNSTRM	87.29	4.61	86.91	8.51	88.42	13.84	1.75	0.32
UPSTRM	89.87	4.61	88.47	8.51	90.99	13.84	-1.25	0.32

Drainage area (ac)	= 1.34	Slope of invert (%)	= 4.4571
Runoff coefficient	= 0.35	Slope energy grade line (%)	= 7.3482
Time of conc (min)	= 10.00	Critical depth (in)	= 7.92
Inlet time (min)	= 10.00	Natural ground elevation	= 88.47
Intensity (in/hr)	= 5.81	Upstream surcharge (ft)	= 0.15
Cumulative C*A	= 0.47	Additional Q (cfs)	= 0.00
Q = CA * I (cfs)	= 2.72	Line capacity (cfs)	= 13.63
Q catchment (cfs)	= 2.72	Inlet length (ft)	= 0.00
Q carryover (cfs)	= 0.00	Gutter slope (ft/ft)	= 0.0000
Q captured (cfs)	= 0.00	Cross slope (ft/ft)	= 0.0000
Q bypassed (cfs)	= 2.72	Ponding width (ft)	= N/A
		Note: Normal depth assumed	

[PgUp] [PgDn] [Home] [End] [P] [D] [Esc]

NOT ON PLAN

Rainfall file: JCC (10 Yr) SS#1-7 - SS#1-6

LINE 13 / Q = 14.7 / HT = 24 / WID = 24 / N = .013 / L = 278 / JLC = .8

DNLN = 11

	HGL	DEPTH	INVERT	VEL	EGL	T WID	COVER	AREA
DNSTRM	83.65	24.00	79.44	4.69	83.99	0.00	8.47	3.14
UPSTRM	84.83	24.00	81.75	4.69	85.17	0.00	3	3.14

Drainage area (ac)	= 0.00	Slope of invert (%)	= 0.8309
Runoff coefficient	= 0.00	Slope energy grade line (%)	= 0.4249
Time of conc (min)	= 30.13	Critical depth (in)	= 16.31
Inlet time (min)	= 0.00	Natural ground elevation	= 86.75
Intensity (in/hr)	= 3.59	Upstream surcharge (ft)	= 1.08
Cumulative C*A	= 4.10	Additional Q (cfs)	= 0.00
Q = CA * I (cfs)	= 14.74	Line capacity (cfs)	= 20.62
Q catchment (cfs)	= 0.00	Inlet length (ft)	= 0.00
Q carryover (cfs)	= 15.75	Gutter slope (ft/ft)	= 0.0000
Q captured (cfs)	= 0.00	Cross slope (ft/ft)	= 0.0000
Q bypassed (cfs)	= 15.75	Ponding width (ft)	= N/A

[PgUp] [PgDn] [Home] [End] [P] [D] [Esc]

NOT ON PLAN

Rainfall file: JCC (10 Yr) SS#1-7A - SS#1-7

LINE 14 / Q = 4.9 / HT = 15 / WID = 15 / N = .013 / L = 35 / JLC = .9

DNLN = 13

	HGL	DEPTH	INVERT	VEL	EGL	T WID	COVER	AREA
DNSTRM	85.11	15.00	81.75	4.02	85.36	0.00	3.75	1.23
UPSTRM	86.01	10.67	84.73	5.29	86.44	13.60	-1.25	0.93

Drainage area (ac)	= 4.57	Slope of invert (%)	= 8.5143
Runoff coefficient	= 0.30	Slope energy grade line (%)	= 3.1048
Time of conc (min)	= 30.00	Critical depth (in)	= 10.67
Inlet time (min)	= 30.00	Natural ground elevation	= 84.73
Intensity (in/hr)	= 3.60	Upstream surcharge (ft)	= 0.03
Cumulative C*A	= 1.37	Additional Q (cfs)	= 0.00
Q = CA * I (cfs)	= 4.94	Line capacity (cfs)	= 18.84
Q catchment (cfs)	= 4.94	Inlet length (ft)	= 0.00
Q carryover (cfs)	= 0.00	Gutter slope (ft/ft)	= 0.0000
Q captured (cfs)	= 0.00	Cross slope (ft/ft)	= 0.0000
Q bypassed (cfs)	= 4.94	Ponding width (ft)	= N/A

[PgUp] [PgDn] [Home] [End] [P] [D] [Esc]

Rainfall file: JCC (10 Yr) NOT ON PLAN SS#1-8 - SS#1-7

LINE 15 / Q = 10.8 / HT = 18 / WID = 18 / N = .013 / L = 60 / JLC = .8

DNLN = 13

	HGL	DEPTH	INVERT	VEL	EGL	T WID	COVER	AREA
DNSTRM	85.11	18.00	81.75	6.10	85.68	0.00	3.5	1.77
UPSTRM	85.74	18.00	82.91	6.10	86.32	0.00	.4	1.77

Drainage area (ac)	= 4.14	Slope of invert (%)	= 1.9333
Runoff coefficient	= 0.30	Slope energy grade line (%)	= 1.0549
Time of conc (min)	= 25.14	Critical depth (in)	= 15.04
Inlet time (min)	= 25.00	Natural ground elevation	= 84.82
Intensity (in/hr)	= 3.95	Upstream surcharge (ft)	= 1.33
Cumulative C*A	= 2.73	Additional Q (cfs)	= 0.00
Q = CA * I (cfs)	= 10.78	Line capacity (cfs)	= 14.60
Q catchment (cfs)	= 4.91	Inlet length (ft)	= 0.00
Q carryover (cfs)	= 5.90	Gutter slope (ft/ft)	= 0.0000
Q captured (cfs)	= 0.00	Cross slope (ft/ft)	= 0.0000
Q bypassed (cfs)	= 10.81	Ponding width (ft)	= N/A

[PgUp] [PgDn] [Home] [End] [P] [D] [Esc]

Rainfall file: JCC (10 Yr) NOT ON PLAN SS#1-8A - SS#1-8

LINE 16 / Q = 5.9 / HT = 15 / WID = 15 / N = .013 / L = 40 / JLC = .9

DNLN = 15

	HGL	DEPTH	INVERT	VEL	EGL	T WID	COVER	AREA
DNSTRM	86.20	15.00	82.91	4.81	86.56	0.00	.65	1.23
UPSTRM	86.86	15.00	84.73	4.81	87.22	0.00	-1.25	1.23

Drainage area (ac)	= 4.97	Slope of invert (%)	= 4.5500
Runoff coefficient	= 0.30	Slope energy grade line (%)	= 0.8350
Time of conc (min)	= 25.00	Critical depth (in)	= 11.66
Inlet time (min)	= 25.00	Natural ground elevation	= 84.73
Intensity (in/hr)	= 3.96	Upstream surcharge (ft)	= 0.88
Cumulative C*A	= 1.49	Additional Q (cfs)	= 0.00
Q = CA * I (cfs)	= 5.90	Line capacity (cfs)	= 13.77
Q catchment (cfs)	= 5.90	Inlet length (ft)	= 0.00
Q carryover (cfs)	= 0.00	Gutter slope (ft/ft)	= 0.0000
Q captured (cfs)	= 0.00	Cross slope (ft/ft)	= 0.0000
Q bypassed (cfs)	= 5.90	Ponding width (ft)	= N/A

[PgUp] [PgDn] [Home] [End] [P] [D] [Esc]

STORM SEWER SYSTEM #2 REVISIONS

The proposed storm sewer system has been relocated to direct the drainage of Shackleton Lane (Phase II) to the existing wet pond. This system will include two new structures and two new pipes. Two drop inlets (#5) are to be installed along Shackleton Lane, with the connecting pipes draining into the wet pond below the normal pool elevation. The attached computer generated calculations show the adequacy of the proposed system.

Rainfall file: JCC (10 Yr) SS#2-2 - SS#2-1

LINE 1 / Q = 2.4 / HT = 15 / WID = 15 / N = .013 / L = 355 / JLC = 1

OUTFALL

	HGL	DEPTH	INVERT	VEL	EGL	T WID	COVER	AREA
DNSTRM	77.40	15.00	70.00	1.93	77.46	0.00	-7.25	1.23
UPSTRM	77.88	11.95	76.88	2.26	77.96	12.07	10.42	1.05

Drainage area (ac) =	0.06	Slope of invert (%) =	1.9380
Runoff coefficient =	0.60	Slope energy grade line (%) =	0.1401
Time of conc (min) =	6.50	Critical depth (in) =	7.39
Inlet time (min) =	5.00	Natural ground elevation =	88.55
Intensity (in/hr) =	6.58	Upstream surcharge (ft) =	0.00
Cumulative C*A =	0.36	Additional Q (cfs) =	0.00
Q = CA * I (cfs) =	2.37	Line capacity (cfs) =	8.99

Q catchment (cfs) =	0.25	Inlet length (ft) =	3.00
Q carryover (cfs) =	2.27	Gutter slope (ft/ft) =	0.0000
Q captured (cfs) =	0.00	Cross slope (ft/ft) =	0.0000
Q bypassed (cfs) =	2.52	Ponding width (ft) =	N/A

[PgUp] [PgDn] [Home] [End] [P] [D] [Esc]

Rainfall file: JCC (10 Yr) SS#2-3 - SS#2-2

LINE 2 / Q = 2.2 / HT = 15 / WID = 15 / N = .013 / L = 40 / JLC = 1

DNLN = 1

	HGL	DEPTH	INVERT	VEL	EGL	T WID	COVER	AREA
DNSTRM	77.96	12.90	76.88	1.92	78.01	13.91	10.42	1.12
UPSTRM	77.99	11.43	77.04	2.15	78.06	12.78	10.26	1.00

Drainage area (ac) =	0.06	Slope of invert (%) =	0.4000
Runoff coefficient =	0.60	Slope energy grade line (%) =	0.1285
Time of conc (min) =	6.18	Critical depth (in) =	7.06
Inlet time (min) =	5.00	Natural ground elevation =	88.55
Intensity (in/hr) =	6.67	Upstream surcharge (ft) =	0.00
Cumulative C*A =	0.32	Additional Q (cfs) =	0.00
Q = CA * I (cfs) =	2.16	Line capacity (cfs) =	4.08

Q catchment (cfs) =	0.25	Inlet length (ft) =	3.00
Q carryover (cfs) =	2.02	Gutter slope (ft/ft) =	0.0000
Q captured (cfs) =	0.00	Cross slope (ft/ft) =	0.0000
Q bypassed (cfs) =	2.27	Ponding width (ft) =	N/A

[PgUp] [PgDn] [Home] [End] [P] [D] [Esc]

Rainfall file: JCC (10 Yr) SS#2-4 - SS#2-3

LINE 3 / Q = 2.0 / HT = 15 / WID = 15 / N = .013 / L = 197 / JLC = 1.1

DNLN = 2

	HGL	DEPTH	INVERT	VEL	EGL	T WID	COVER	AREA
DNSTRM	78.06	12.29	77.04	1.87	78.12	13.58	10.26	1.08
UPSTRM	81.60	6.82	80.80	3.72	81.82	14.94	1.25	0.54

Drainage area (ac)	=	0.48	Slope of invert (%)	=	1.9086
Runoff coefficient	=	0.60	Slope energy grade line (%)	=	1.7582
Time of conc (min)	=	5.00	Critical depth (in)	=	6.82
Inlet time (min)	=	5.00	Natural ground elevation	=	83.30
Intensity (in/hr)	=	7.00	Upstream surcharge (ft)	=	0.00
Cumulative C*A	=	0.29	Additional Q (cfs)	=	0.00
Q = CA * I (cfs)	=	2.02	Line capacity (cfs)	=	8.92

.29
+ .16
.45

Q catchment (cfs)	=	2.02	Inlet length (ft)	=	3.00
Q carryover (cfs)	=	0.00	Gutter slope (ft/ft)	=	0.0000
Q captured (cfs)	=	0.00	Cross slope (ft/ft)	=	0.0000
Q bypassed (cfs)	=	2.02	Ponding width (ft)	=	N/A

[PgUp] [PgDn] [Home] [End] [P] [D] [Esc]

THE MEADOWS SECTION IV (#7820) - Large Pond 4/94 CAH

TEMPORARY SEDIMENT BASIN DESIGN

DA = 27.57 AC. ←

→ TOTAL STORAGE VOLUME REQ'D = (134 CY/ACRE)(27.57 AC) =
3,695 CY = 99,765 CF ←

→ REQ'D STORAGE ACHIEVED @ ELEV. = 73.85
(WET STORAGE = 49,883 / DRY STORAGE = 49,883)

→ PROVIDE WET STORAGE TO ELEV. = 73.00

∴ WET STORAGE PROVIDED ≅ 79,148 CF >> 49,883 CF ✓

∴ DEWATERING ORFICE TO BE @ ELEV. = 73.00

→ PROVIDE DRY STORAGE TO ELEV. = 76.30

∴ DRY STORAGE PROVIDED ≅ 93,167 CF >> 49,883 CF ✓

→ TOTAL STORAGE PROVIDED ≅ 172,315 CF >> 99,765 CF ✓

* NOTE: SEDIMENT CLEANOUT POINT OCCURS AT 39,574 CF OR ELEV. ≅ 70.7

THE MEADOWS SECTION IV #7820

TEMPORARY SEDIMENT BASIN DESIGN CON'T

→ DEWATERING DEVICE

$Q = S / 21{,}600 \text{ SEC}$

$S = 93{,}167 \text{ CF}$

$Q = 93{,}167 / 21{,}600 = 4.31 \text{ CFS}$ $\quad h = 1.73 \text{ ft}$

$A = Q / (64.32 * h/2)^{1/2} (0.6) = \frac{4.31}{4.48} = 0.963 \text{ ft}^2$

$A = 0.963 \text{ ft}^2$

$d_{max} = 2 \left(\frac{A}{3.14}\right)^{1/2} = 1.11 \text{ ft} \simeq 13.3 \text{ in}$

* USE 6 IN. DEWATERING ORFICE WITH 8 IN. DIA. TUBING

Option 1 STAGE / STORAGE TABLE R to reset

IMMMMMMMMMMMMMMMMMMMMMMMMMMMMMMMMMMMMMMMMMMMMMMMMMMMMMMMMMMMMMMMMMMMMMMMMMMMMMMMMMM

: 1. RESERVOIR No = 1. 2. RESERVOIR NAME = SED BASIN...

: 3. S = Ks * Z^b

: Ks = 0............ b = 0..........

: START ELEV = 0..... INCREMENT = 0...

:

	STAGE ft	ELEVATION ft	CO AREA sq ft	INC STORAGE cu ft	TOT STORAGE cu ft
: 4	0.00	64.00.	39......	0	0
: 5	2.00	66.00.	2195....	2234	2234
: 6	4.00	68.00.	6890....	9085	11319
: 7	6.00	70.00.	11425...	18315	29634
: 8	8.00	72.00.	17731...	29156	58790
: 9	9.00	73.00.	22985...	20358	79148
: 10	10.00	74.00.	25230...	24107	103255
: 11	12.00	76.00.	33935...	59165	162420
: 12	14.00	78.00.	45221...	79156	241576
: 13	16.00	80.00.	55207...	100428	342004
: 14	0.00	0.00.	0.......	0	0

:

:

HMMMMMMMMMMMMMMMMMMMMMMMMMMMMMMMMMMMMMMMMMMMMMMMMMMMMMMMMMMMMMMMMMMMMMMMMMMMMMMMMMMM

Change item number: 0 *DY* to cont

Option 1 STAGE / STORAGE TABLE STORAGE POND R to reset

1. RESERVOIR No = 1. 2. RESERVOIR NAME = POND #1.....
3. S = Ks * Z^b
Ks = 0..... b = 0.....
START ELEV = 0..... INCREMENT = 0...

	STAGE ft	ELEVATION ft	CO AREA sq ft	INC STORAGE cu ft	TOT STORAGE cu ft
4	0.00	64.00.	39.....	0	0
5	2.00	66.00.	2195....	2234	2234
6	4.00	68.00.	6890....	9085	11319
7	6.00	70.00.	11425...	18315	29634
8	8.00	72.00.	17731...	29156	58790
9	9.00	73.00.	22985...	20358	79148
10	10.00	74.00.	25230...	24107	103255
11	12.00	76.00.	33935...	59165	162420
12	14.00	78.00.	45221...	79156	241576
13	16.00	80.00.	55207...	100428	342004
14	0.00	0.00.	0.....	0	0

Change item number: 0 ↵ to cont

Option 1 STAGE / STORAGE TABLE ROUTING POND R to reset

1. RESERVOIR No = 2. 2. RESERVOIR NAME = POND #2.....
3. S = Ks * Z^b
Ks = 0..... b = 0.....
START ELEV = 0..... INCREMENT = 0...

	STAGE ft	ELEVATION ft	CO AREA sq ft	INC STORAGE cu ft	TOT STORAGE cu ft
4	0.00	73.00.	22985...	0	0
5	1.00	74.00.	25230...	24107	24107
6	3.00	76.00.	33935...	59165	83272
7	5.00	78.00.	45221...	79156	162428
8	7.00	80.00.	55207...	100428	262856
9	0.00	0.00.	0.....	0	0
10	0.00	0.00.	0.....	0	0
11	0.00	0.00.	0.....	0	0
12	0.00	0.00.	0.....	0	0
13	0.00	0.00.	0.....	0	0
14	0.00	0.00.	0.....	0	0

Change item number: 0 ↵ to cont

Reservoir No. 2 OUTLET STRUCTURES

CULVERT STRUC A. Q=CoA[2gh/k]^.5

1. WIDTH (in) = 24.
2. HEIGHT (in) = 24.
3. No. BARRELS = 1..
4. INVERT ELEV. = 64.25....
5. Co = 0.60
6. CULVERT LENGTH (ft) = 105.
7. CULVERT SLOPE (%) = 5.95
8. MANNING'S N-VALUE = .013

CULVERT STRUC B. Q=CoA[2gh/k]^.5

9. WIDTH (in) = 6..
10. HEIGHT (in) = 6..
11. No. BARRELS = 1..
12. INVERT ELEV. = 73.....
13. Co = 0.60
14. CULVERT LENGTH (ft) = 0...
15. CULVERT SLOPE (%) = 0...
16. MANNING'S N-VALUE = .013
17. MULTI-STAGE OPTION ? (Y/N) N

WEIR STRUCTURE A. Q=CwLH^EXP

18. CREST LENGTH (ft) = 12.56..
19. CREST ELEVATION = 76.8...
20. Cw = 3.00
21. EXP = 1.50
22. MULTI-STAGE OPTION ? (Y/N) Y

WEIR STRUCTURE B. Q=CwLH^EXP

23. CREST LENGTH (ft) = 10.....
24. CREST ELEVATION = 78.5...
25. Cw = 3.00
26. EXP = 1.50
27. MULTI-STAGE OPTION ? (Y/N) N

Change item number: 0 ↵ to cont

HYDROLOGICAL REPORT

2 YR PRE DEVELOPMENT..
TO POND #2.....
.....
HYD. No. 1

Hydrograph type = S.C.S. RUNOFF
Storm frequency = 2 yr
Basin area = 4.1 ac
Ave basin slope = 6 %
Basin lag = 9.0 min
Total precip. = 3.8 in

Peak discharge = 7.34 cfs
Time interval = 2 min
Basin curve no. = 74
Hydraulic len = 550 ft
Time of concen. = 15 min
Distribution = S.C.S. II

TIME--OUTFLOW hrs	cfs	TIME--OUTFLOW hrs	cfs	TIME--OUTFLOW hrs	cfs	TIME--OUTFLOW hrs	cfs
11.10	0.09	11.13	0.10	11.17	0.10	11.20	0.11
11.23	0.12	11.27	0.13	11.30	0.15	11.33	0.16
11.37	0.17	11.40	0.19	11.43	0.20	11.47	0.22
11.50	0.23	11.53	0.26	11.57	0.29	11.60	0.35
11.63	0.43	11.67	0.56	11.70	0.74	11.73	0.97
11.77	1.27	11.80	1.67	11.83	2.19	11.87	2.88
11.90	3.79	11.93	4.89	11.97	5.98	12.00	6.85

[↵] to continue [Esc] to cancel

HYDROLOGICAL REPORT

2 YR POST DEVELOPMENT.
TO POND #2.....
.....
HYD. No. 2

Hydrograph type = S.C.S. RUNOFF
Storm frequency = 2 yr
Basin area = 30.62 ac
Ave basin slope = 1 %
Basin lag = 28.2 min
Total precip. = 3.8 in

Peak discharge = 39.98 cfs
Time interval = 2 min
Basin curve no. = 81
Hydraulic len = 1700 ft
Time of concen. = 47 min
Distribution = S.C.S. II

TIME--OUTFLOW hrs	cfs	TIME--OUTFLOW hrs	cfs	TIME--OUTFLOW hrs	cfs	TIME--OUTFLOW hrs	cfs
8.97	0.08	9.00	0.08	9.03	0.09	9.07	0.10
9.10	0.11	9.13	0.12	9.17	0.13	9.20	0.14
9.23	0.15	9.27	0.16	9.30	0.18	9.33	0.19
9.37	0.20	9.40	0.21	9.43	0.22	9.47	0.23
9.50	0.25	9.53	0.26	9.57	0.27	9.60	0.28
9.63	0.29	9.67	0.31	9.70	0.32	9.73	0.33
9.77	0.34	9.80	0.35	9.83	0.37	9.87	0.38

[↵] to continue [Esc] to can

cel

Qp = 5.5 RESERVOIR ROUTE 2 Yr

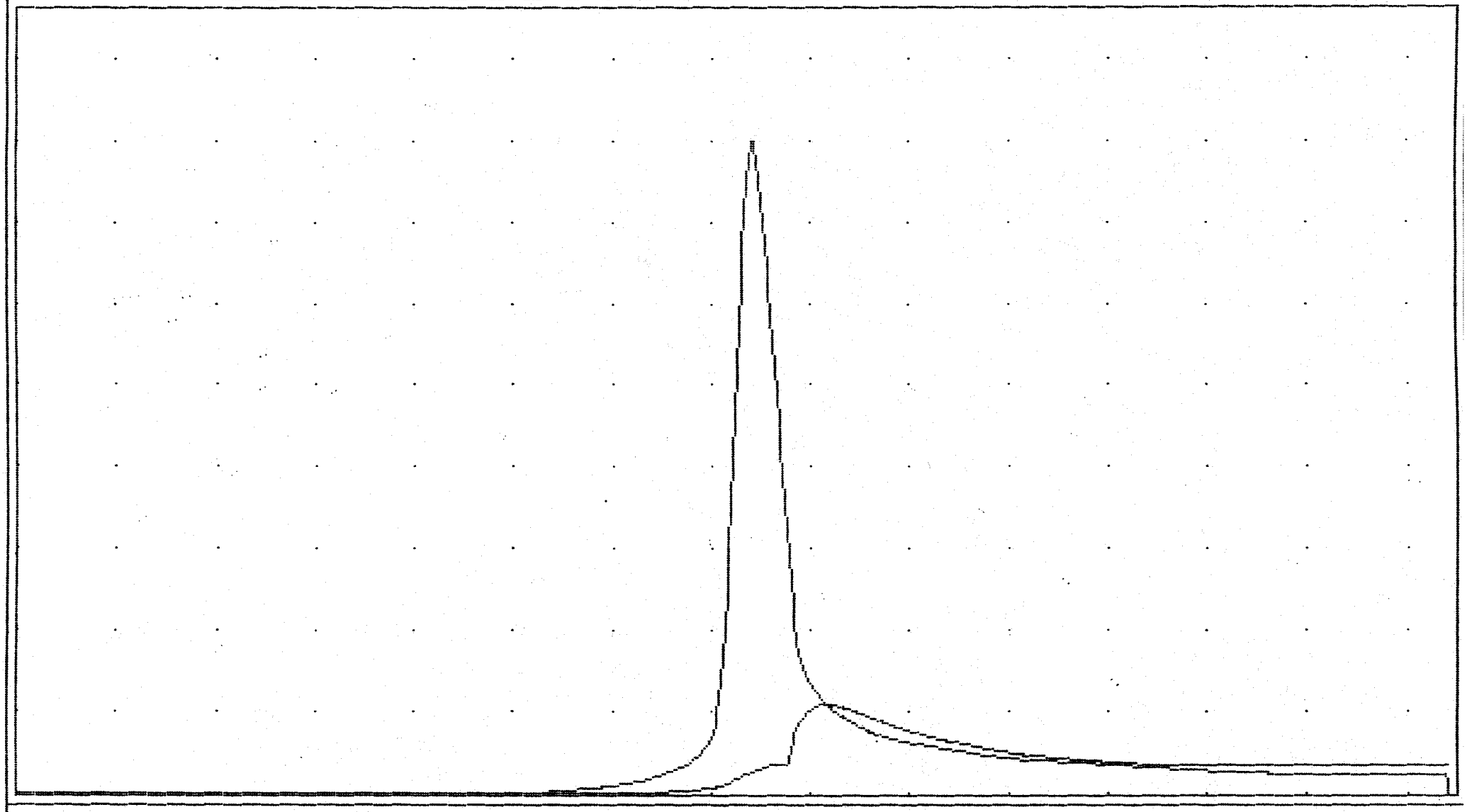

HGU = 100 min 7 VGU = 5.0 cfs

MAX STORAGE = 123211

MAX ELEVATION = 77.01

Qp = 47.7 RESERVOIR ROUTE 10 Yr

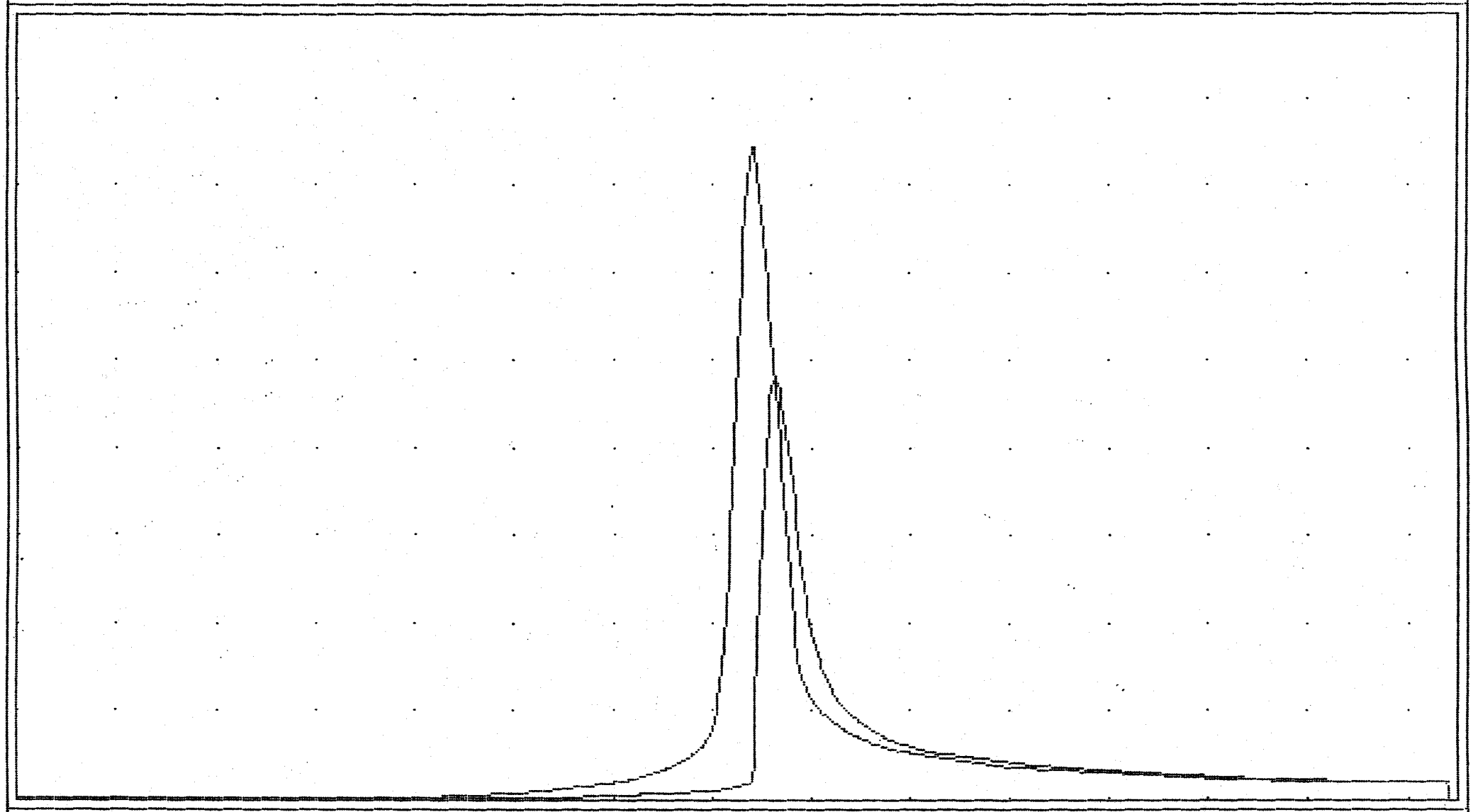

HGU = 100 min 8 VGU = 10.0 cfs

MAX STORAGE = 159814

MAX ELEVATION = 77.93

MC03_LAFAYATTE_OPEN_SPACE_THE_MEADOWS_- 058

Qp = 56.7 RESERVOIR ROUTE 25 Yr

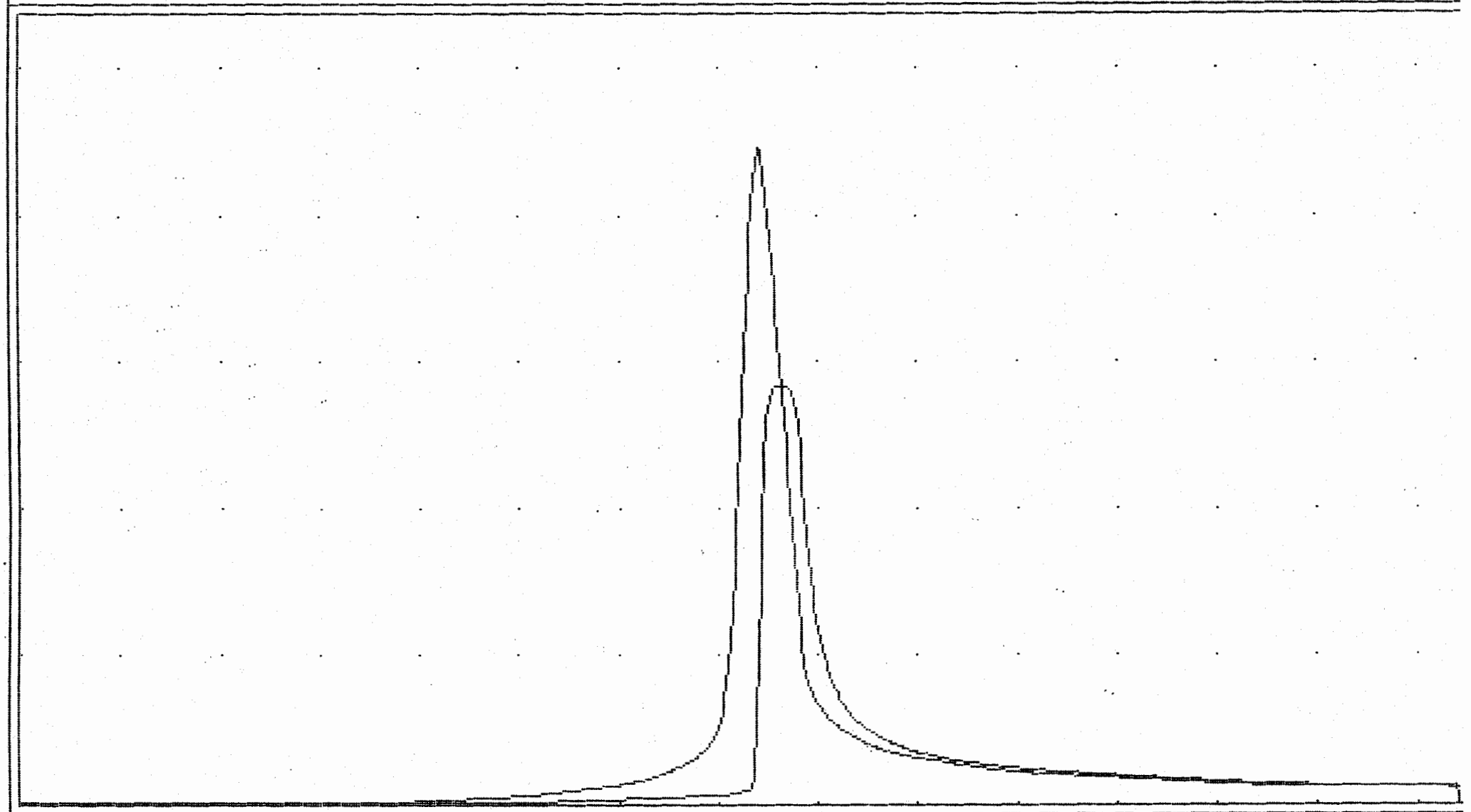

HGU = 100 min 20 VGU = 20.0 cfs

MAX STORAGE = 176460

MAX ELEVATION = 78.28

Qp = 76.8 RESERVOIR ROUTE 100 Yr

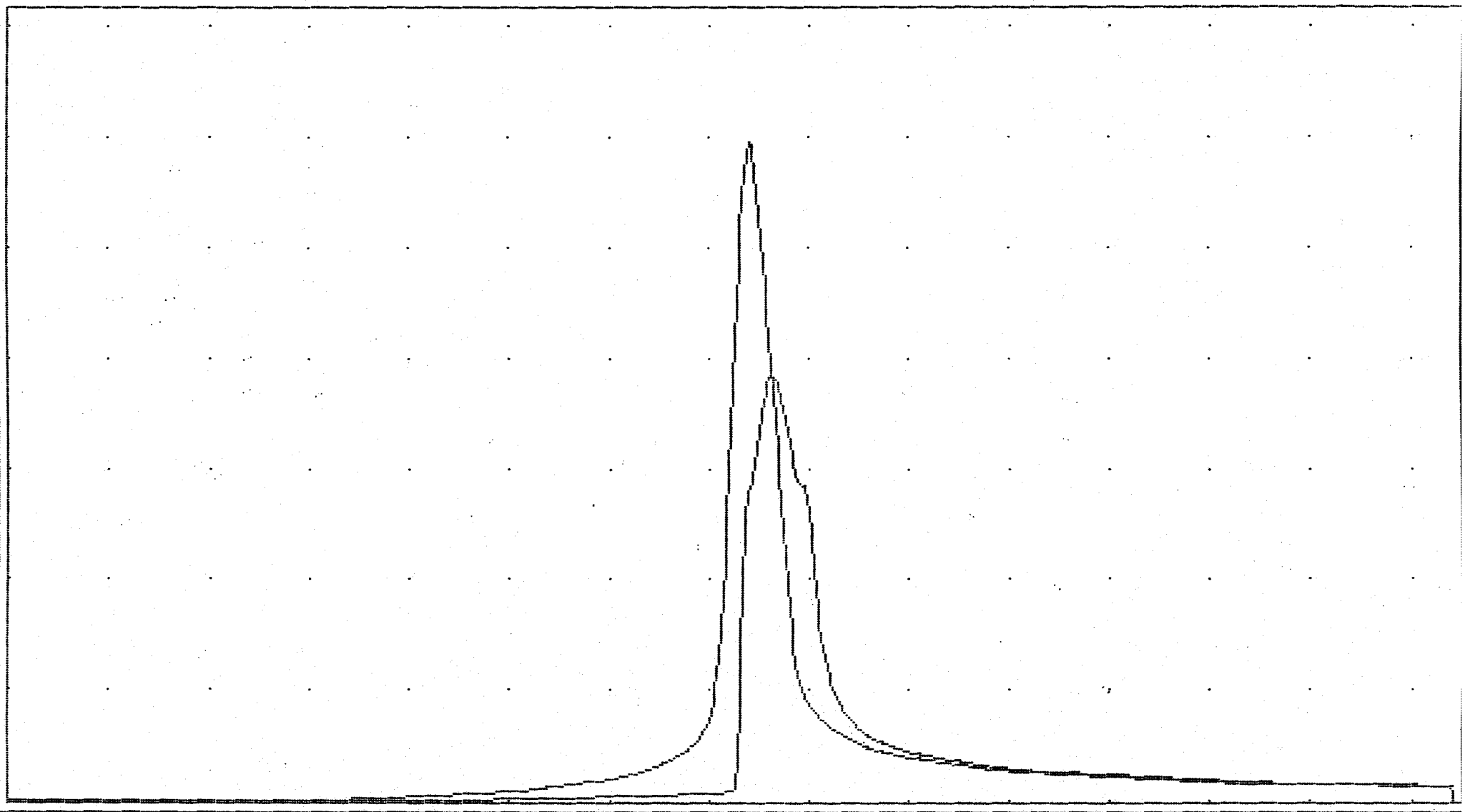

HGU = 100 min 9 VGU = 20.0 cfs

MAX STORAGE = 223232

MAX ELEVATION = 79.21

FILE · Meadows Sect IV-Ph III

DEVELOPMENT MANAGEMENT

101-E MOUNTS BAY ROAD, P.O. BOX 8784, WILLIAMSBURG, VIRGINIA 23187-8784
(757) 253-6671 Fax: (757) 253-6850 E-MAIL: devtman@james-city.va.us

CODE COMPLIANCE
(757) 253-6626
codecomp@james-city.va.us

ENVIRONMENTAL DIVISION
(757) 253-6670
environ@james-city.va.us

PLANNING
(757) 253-6685
planning@james-city.va.us

COUNTY ENGINEER
(757) 253-6678

INTEGRATED PEST MANAGEMENT
(757) 253-2620

July 20, 1998

MAR 1999
RECEIVED
PLANNING DEPARTMENT

Sharps Road/ Old Field Road Petitioners
c/o Mr. Gerald Abraham
123 Old Field Road
Williamsburg, VA 23188

To Whom It May Concern:

I received your petition concerning the installation of a drainage ditch adjacent to the rear lot lines of your properties. The petition requests that the ditch not be installed in an effort to save the trees that would have to be removed to install the ditch. The ditch was proposed during the plan review stage to intercept drainage from lots 20 through 28 of Section 4, Phase III of the Meadows and divert the stormwater into the new road, Cherry Walk, before draining onto your lots in Section 1 of the Meadows.

I reviewed the situation in the field with Mr. Gerald Abraham and Mr. Daniel Hall. It appears that as the new lots are relatively flat, the drainage from at the least the front portion of the lots can be directed to the roadside ditch of Cherry Walk. This drainage pattern can be required during the building permit review process. The process includes a review of the proposed drainage plan for each individual lot in Phase III and we will ensure that all drainage from at least the front half of the houses as well as the driveways be diverted to the new street. Additionally, an effort will be made to divert all the drainage from the houses to the front in an effort to minimize runoff onto your adjacent lots.

However, it needs to be understood that the rear yards and a probably a portion of each new house will drain toward the rear lot line and potentially onto your lots. Therefore, in order to eliminate the ditch, I am requesting that the petitioners sign the reverse side of this letter and return it as an acknowledgement that there is a potenial drainage issue that will arise from the construction of the Phase III homes but that the proposed solution (the drainage ditch) was not acceptable. Mr. Kniest has been consulted on the issue and is agreeable with this approach.

Please contact me at 253-6673 if you have any questions.

Sincerely,

Darryl E Cook

Darryl E. Cook
Environmental Director

Wayne Scott
Raul E. Mejia
Alan [illegible]
Ed Murdock
Patricia Moriarty
Dennis E. Smithub
Martin + Patty Oliva
Alice Odom
Daniel M. Hall
John H. Zimmison
Jerrel R. Ahr[illegible]

June 23, 1998

James City County
P. O. Box 8784
Williamsburg, VA 23187

Dear Sir:

As homeowners in the Meadows Subdivision, we, the undersigned, petition the County that they **NOT REQUIRE** Van Kniest, Inc. provide and clear a 10-foot right of way adjacent to our rear property lines for the purpose of a drainage ditch.

Name	Address	Phone #	Signature
LINDA + JEROLD ABRAHAM	123 OLD FIELD RD	757-220-9690	Jerold R Abr Linda Abraham
Wayne Scott	125 OLD FIELD RD	220-1250	Wayne Scott
DENNIS & RACHEL CHRISTLIEB	154 SHARPS RD.	757-229-2792	Dennis G Christlieb
RAUL + GINNY MEJIA	152 SHARPS RD	757-221-0269	Raul E. Mejia
Patricia Moriarty	144 Sharps Rd	229-7160	Patricia A. Moriarty
John + Julie Jimmerson	146 Sharp Rd.	220-3512	John Jimmerson
Alin Olson	140 Sharps Rd	253 0931	Alin U. Olson
DONNA + ERNIE MURDOCK	148 SHARPS RD.	220-3415	Donna Murdock
MARTIN + PATSY OLIVER	138 SHARPS RD	220-0981	Martin C. Oliver
ALAN JENNETT	150 SHARPS RD.	253-6548	Alan [illegible]
DANIEL M ANNE E HALL	142 SHARPS RD	253-7563	[illegible] Anne E Hall

WATERSHED	MC	MAINTENANCE PLAN	No	CTRL STRUC DESC	CMP Riser
BMP ID NO	031	SITE AREA acre	30.19	CTRL STRUC SIZE inches	48
PLAN NO	S-36-94	LAND USE	SF Residential	OTLT BARRL DESC	CMP Barrel
TAX PARCEL	(38-04)(20-1A)	old BMP TYP	Wet Pond	OTLT BARRL SIZE inch	24
PIN NO	3842000001A	JCC BMP CODE			
CONSTRUCTION DATE	1/1/1995	POINT VALUE		EMERG SPILLWAY	Yes
PROJECT NAME	The Meadows Section 4			DESIGN HW ELEV	78.46
FACILITY LOCATION	East of 4860 Milden Lane			PERM POOL ELEV	73.00
CITY-STATE	Williamsburg, Va. 23188	SVC DRAIN AREA acres	0	2-YR OUTFLOW cfs	
CURRENT OWNER	Meadows II Limited Partnership			10-YR OUTFLOW cfs	
OWNER ADDRESS	426B Airport Road			REC DRAWING	No
OWNER ADDRESS 2		SERVICE AREA DESCRI	SF Lots and Roadways		
CITY-STATE-ZIP CODE	Williamsburg, Va. 23188	IMPERV AREA acres		CONSTR CERTI	No
OWNER PHONE		RECV STREAM	UT of Mill Creek		
MAINT AGREEMENT	No	EXT DET-WQ-CTRL	Yes	LAST INSP DATE	12/7/2000
EMERG ACTION PLAN	No	WTR QUAL VOL acre-ft		INTERNAL RATING	4
		CHAN PROT CTRL	No	MISC/COMMENTS	
		CHAN PROT VOL acre-ft	0	Wet Pond end of Milden Rd.	
		SW/FLOOD CONTROL	Yes		
		GEOTECH REPORT	No		

Get Last BMP No

Return to Menu

OK to proceed 3/27/98
will follow up w/ as-builts
to verify changes

THE MEADOWS - SECTION 4 WET POND
REVISIONS FOR ADDITIONAL PHASE 3 AREA

Existing pond configuration is as follows:

Top of dam	EL 79.50
Crest of emerg. spillway	EL 77.75
Crest of riser	EL 76.30
Normal pool	EL 73.00

Addition of 3.05 acres results in total drainage area of 30.62 acres. As the previous normal pool elevation was set above that required for water quality, the new volume of 76,139 CF does not exceed the previous normal pool volume of 79,156 CF. Therefore, the normal pool elevation remains at 73.00.

The additional flow does, however, affect storm routing. For this reason, modifications to the pond structures are proposed. These modifications are as follows:

1. The crest of the riser is raised 0.5' to EL 76.80 to control the 2-year post development storm. This yields an increased storage of 19,789 CF below the riser crest.
2. The crest of the emergency spillway is raised 0.75' to EL 78.50 to contain the 25-year post development storm. This allows the spillway to remain grassed rather than requiring a concrete lining.
3. The top of dam is raised 0.7' to EL 80.20 to maintain a 1.0' freeboard between the 100-year high water EL 79.2 and the top of dam.

The original emergency spillway design was checked for the 100-year storm adequacy. At the maximum 100-year EL of 79.2, the discharge over the spillway is 18 CFS. Using the channel charts for the existing trapezoidal section, the depth is determined to be less than 1.0', therefore the existing channel section is adequate at the new elevation of 78.50.

The buoyancy calculations for the principal spillway were also checked for adequacy. As the normal pool elevation remains the same, the weight of the water displaced by the riser does not change (4,313 LBS). The additional 0.5' height of the riser results in a total structure weight of 1,577 LBS. When the weight of the concrete backfill is added to the structure weight, the resulting downward force is 5,818 LBS, which is, of course, at least 1.25 times greater than the upward force of 4,313 LBS.

The proposed pond configuration changes are as follows:

Top of dam	EL 80.20
Crest of emerg. spillway	EL 78.50
Crest of riser	EL 76.80
Normal pool	EL 73.00

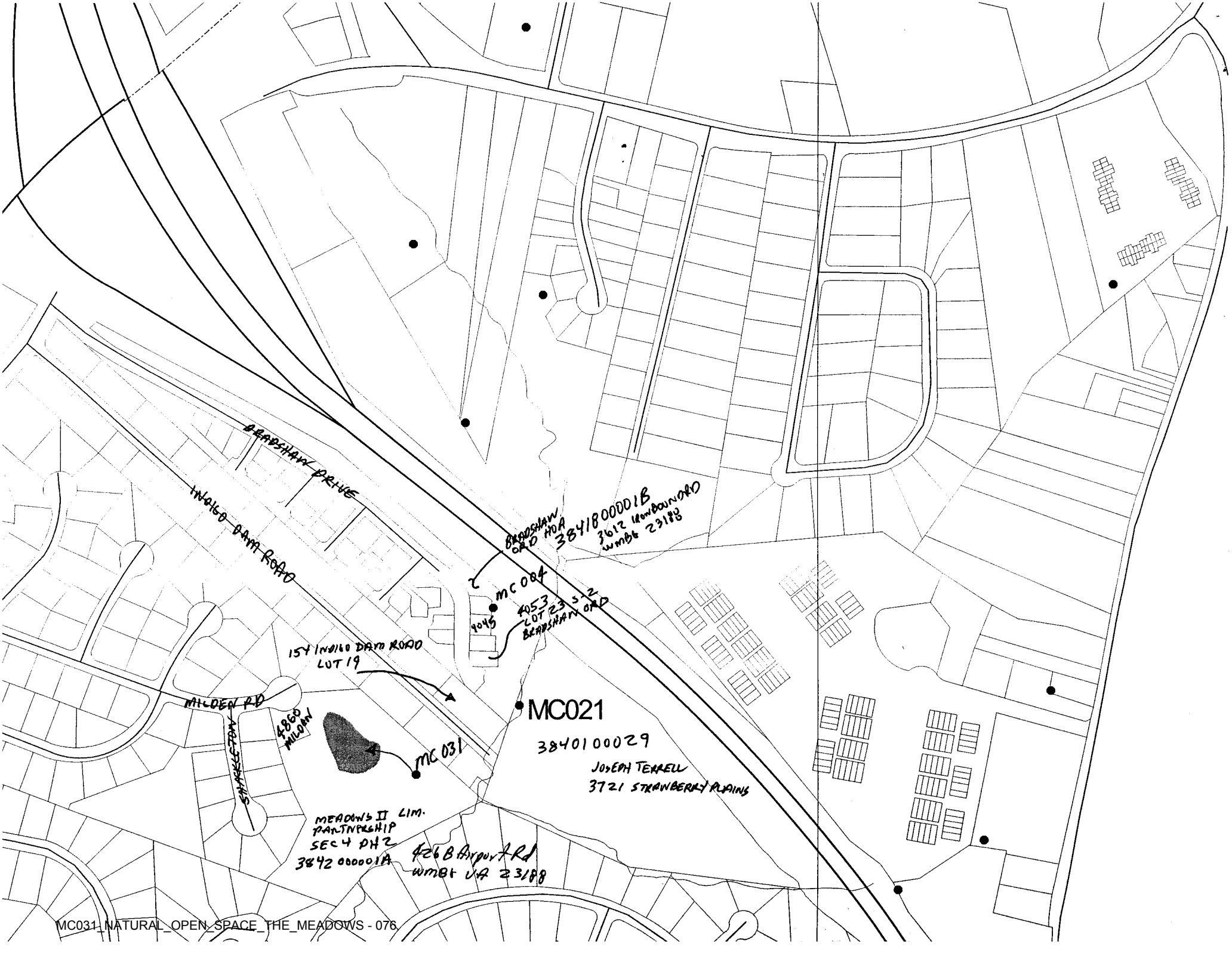
BRADSHAW DRIVE
INDIGO DAM ROAD
BRADSHAW ORD HOA
3841800001B
3612 IRONBOUND RD
WMBG 23188
MC 004
4053 LOT 23 S 2
BRADSHAW ORD
4045
154 INDIGO DAM ROAD
LOT 19
MILDEN RD
4860 MILDAN
SHAKESPEARE
MC 031
MC021
3840100029
JOSEPH TERRELL
3721 STRAWBERRY PLAINS
MEADOWS II LIM.
PARTNERSHIP
SEC 4 PH 2
3842 000001A
426 B Airport Rd
WMBG VA 23188

MC031
MC042
MC043
Meadows Subdivision
Scale: 1 inch = 500 feet (approx.)

PC140
Monticello Ave
Monticello Ave
Rentick Ln
Lily Ln
Shady Ln
Kathleen Way
Ernest Ln
Bradshaw Dr
Knott Pl
Humelstine Pkwy
Humelstine Pkwy
Indigo Dam Rd
MC004
MC021
Flavias Ct
Milden Rd
Fleetwood Ln
Cherry Walk
MC031
Shackleton Ln
Ironbound Rd
Old Field Rd
MC042
Old Meadows Rd
Sharps Rd
Lauren Ct
MC043
Frond Ct
Tendril Ct
Bridgewater Dr
Whithorn Cir
MC001
Old Field Rd
Sharps Rd
Whistle Walk
MC051
MC050
Burnley Dr
Greyabbey Cir

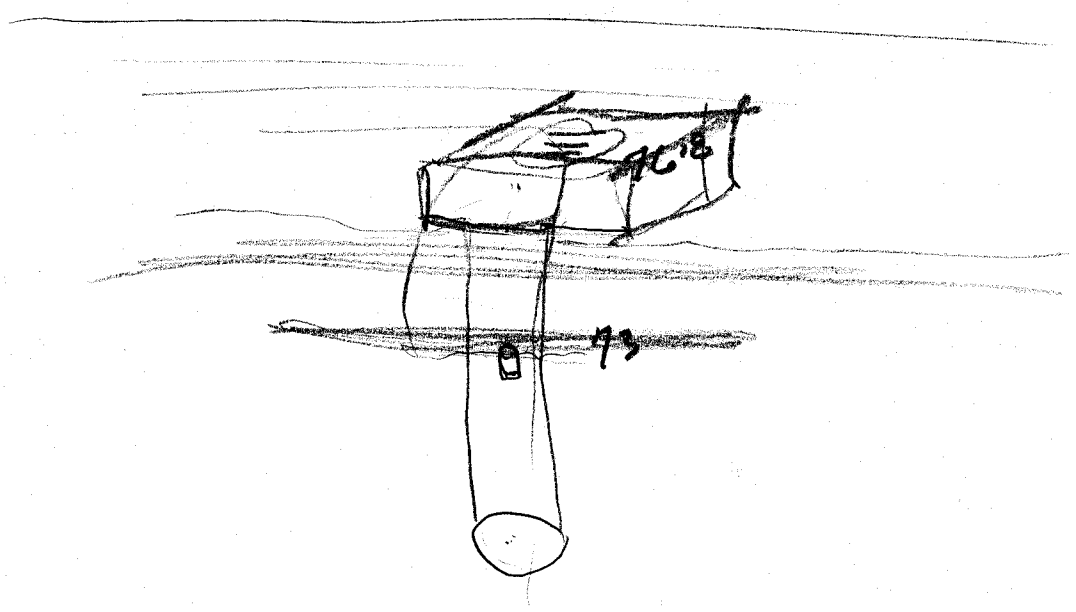
MC 18
73

CONSULTING ENGINEERS

5248 Olde Towne Road • Suite 1 • Williamsburg, Virginia 23188
(757) 253-0040 • Fax (757) 220-8994 • E-mail aes@aesva.com

May 11, 1999

Mr. John H. Kniest, Jr.
Van Kniest, Inc.
426 Airport Road
Williamsburg, Virginia 23185

RE: The Meadows Section 4, Phase I, II & III
Stormwater Management Wet Pond Inspection
AES Project No. 7820-1

Dear Mr. Kniest:

AES Consulting Engineers in April 1999 and on November 4, 1998, and May 11, 1999 performed inspections of the constructed improvements for the James City County required Stormwater Management Wet Pond at the end of Milden Road for the above referenced project. During construction field checks of the equipment by our staff indicated the proper construction methods, techniques, sequences and/or procedures were in accordance with the approved plans and applicable standards. To the best of our knowledge all improvements appear to have been constructed as indicated on the construction drawings.

Should you have any questions pertaining to this matter, please do not hesitate to give me a call.

Sincerely,

AES Consulting Engineers

Steven O. Wigley, P.E.

cc: Mr. Darryl Cook - J.C.C. Code Compliance
Mr. Bill Taylor – Toano Contractors, Inc.

S:\JOBS\7820\00\WORDPROC\Document\78200100.doc

HYDROLOGIC REPORT FOR

THE MEADOWS SECTION IV

JOB NO. 7820

POND 1

PREPARED BY:

AES CONSULTING ENGINEERS

C. ANDREW HERR

WILLIAMSBURG, VIRGINIA

DATE:4/94

Option 1 STAGE / STORAGE TABLE R to reset

IMMMMMMMMMMMMMMMMMMMMMMMMMMMMMMMMMMMMMMMMMMMMMMMMMMMMMMMMMMMMMMMMMMMMMMMMMMMMMM

: 1. RESERVOIR No = 1. 2. RESERVOIR NAME = SED BASIN...

: 3. S = Ks * Z^b

: Ks = 0............ b = 0..........

: START ELEV = 0..... INCREMENT = 0...

	STAGE ft	ELEVATION ft	CO AREA sq ft	INC STORAGE cu ft	TOT STORAGE cu ft
4	0.00	64.00.	39......	0	0
5	2.00	66.00.	2195....	2234	2234
6	4.00	68.00.	6890....	9085	11319
7	6.00	70.00.	11425...	18315	29634
8	8.00	72.00.	17731...	29156	58790
9	9.00	73.00.	22985...	20358	79148
10	10.00	74.00.	25230...	24107	103255
11	12.00	76.00.	33935...	59165	162420
12	14.00	78.00.	45221...	79156	241576
13	16.00	80.00.	55207...	100428	342004
14	0.00	0.00.	0.......	0	0

HMMMMMMMMMMMMMMMMMMMMMMMMMMMMMMMMMMMMMMMMMMMMMMMMMMMMMMMMMMMMMMMMMMMMMMMMMMMMMM

Change item number: 0 DY to cont

Option 1 STAGE / STORAGE TABLE R to reset

1. RESERVOIR No = 3. 2. RESERVOIR NAME = POND #1.....

3. S = Ks * Z^b

Ks = 0............. b = 0...........

START ELEV = 0..... INCREMENT = 0...

	STAGE ft	ELEVATION ft	CO AREA sq ft	INC STORAGE cu ft	TOT STORAGE cu ft
4	0.00	73.00.	22985...	0	0
5	1.00	74.00.	25230...	24107	24107
6	3.00	76.00.	33935...	59165	83272
7	5.00	78.00.	45221...	79156	162428
8	7.00	80.00.	55207...	100428	262856
9	0.00	0.00.	0.......	0	0
10	0.00	0.00.	0.......	0	0
11	0.00	0.00.	0.......	0	0
12	0.00	0.00.	0.......	0	0
13	0.00	0.00.	0.......	0	0
14	0.00	0.00.	0.......	0	0

Change item number: 0 DY to cont

Reservoir No. 3 OUTLET STRUCTURES

CULVERT STRUC A. Q=CoA[2gh/k]^.5

1. WIDTH (in) = 24.
2. HEIGHT (in) = 24.
3. No. BARRELS = 1..
4. INVERT ELEV. = 64.25....
5. Co = 0.60
6. CULVERT LENGTH (ft) = 105.
7. CULVERT SLOPE (%) = 5.95
8. MANNING'S N-VALUE = .013

CULVERT STRUC B. Q=CoA[2gh/k]^.5

9. WIDTH (in) = 6..
10. HEIGHT (in) = 6..
11. No. BARRELS = 1..
12. INVERT ELEV. = 73.......
13. Co = 0.60
14. CULVERT LENGTH (ft) = 0...
15. CULVERT SLOPE (%) = 0...
16. MANNING'S N-VALUE = .013
17. MULTI-STAGE OPTION ? (Y/N) N

WEIR STRUCTURE A. Q=CwLH^EXP

18. CREST LENGTH (ft) = 12.56..
19. CREST ELEVATION = 76.3...
20. Cw = 3.00
21. EXP = 1.50
22. MULTI-STAGE OPTION ? (Y/N) Y

WEIR STRUCTURE B. Q=CwLH^EXP

23. CREST LENGTH (ft) = 10.....
24. CREST ELEVATION = 77.75..
25. Cw = 3.00
26. EXP = 1.50
27. MULTI-STAGE OPTION ? (Y/N) N

Change item number: 0 DY to cont

Qp = 6.8 RESERVOIR ROUTE 2 Yr

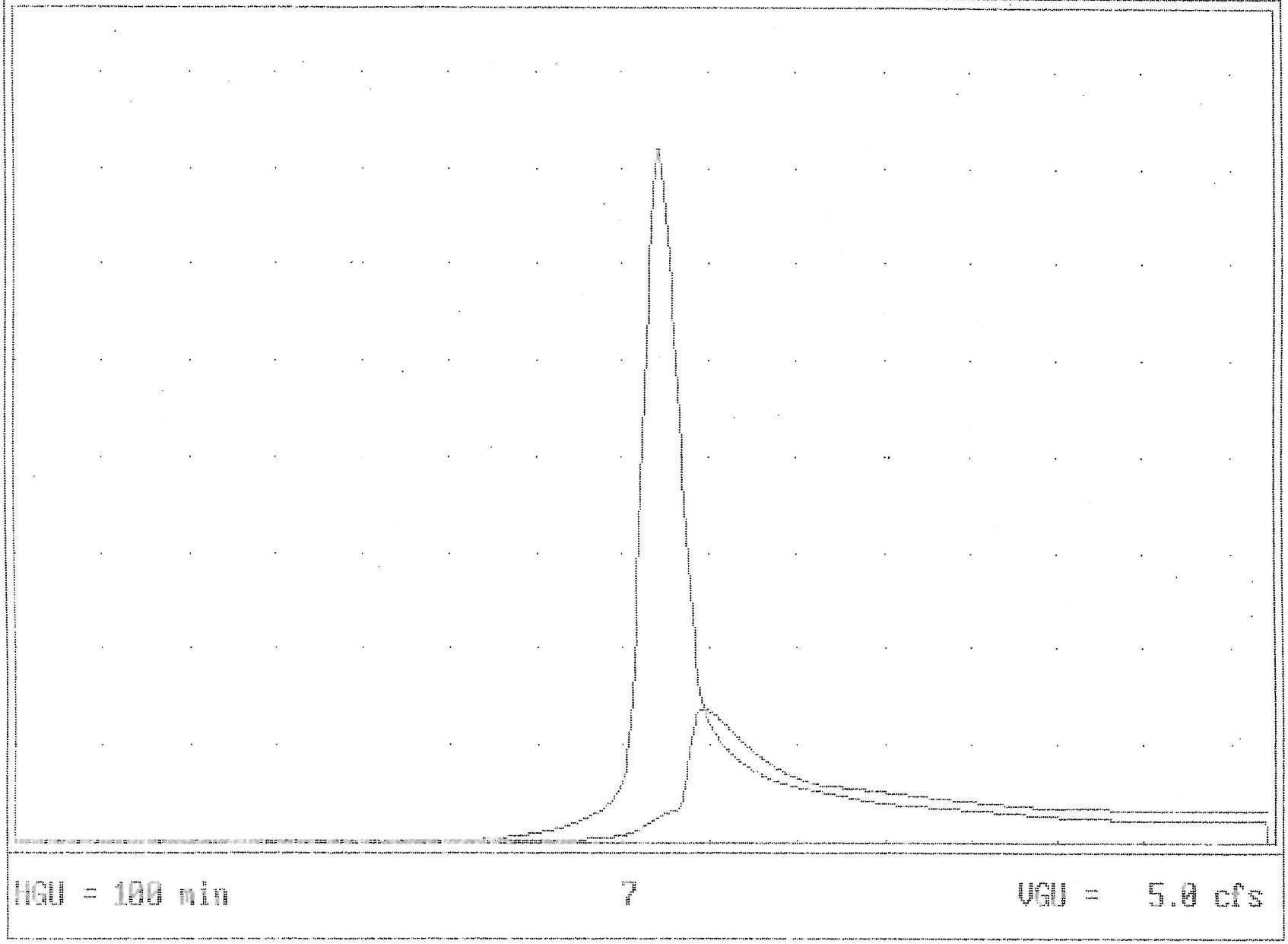

MAX STORAGE = 105330

MAX ELEVATION = 76.56

Qp = 44.5 RESERVOIR ROUTE 10 Yr

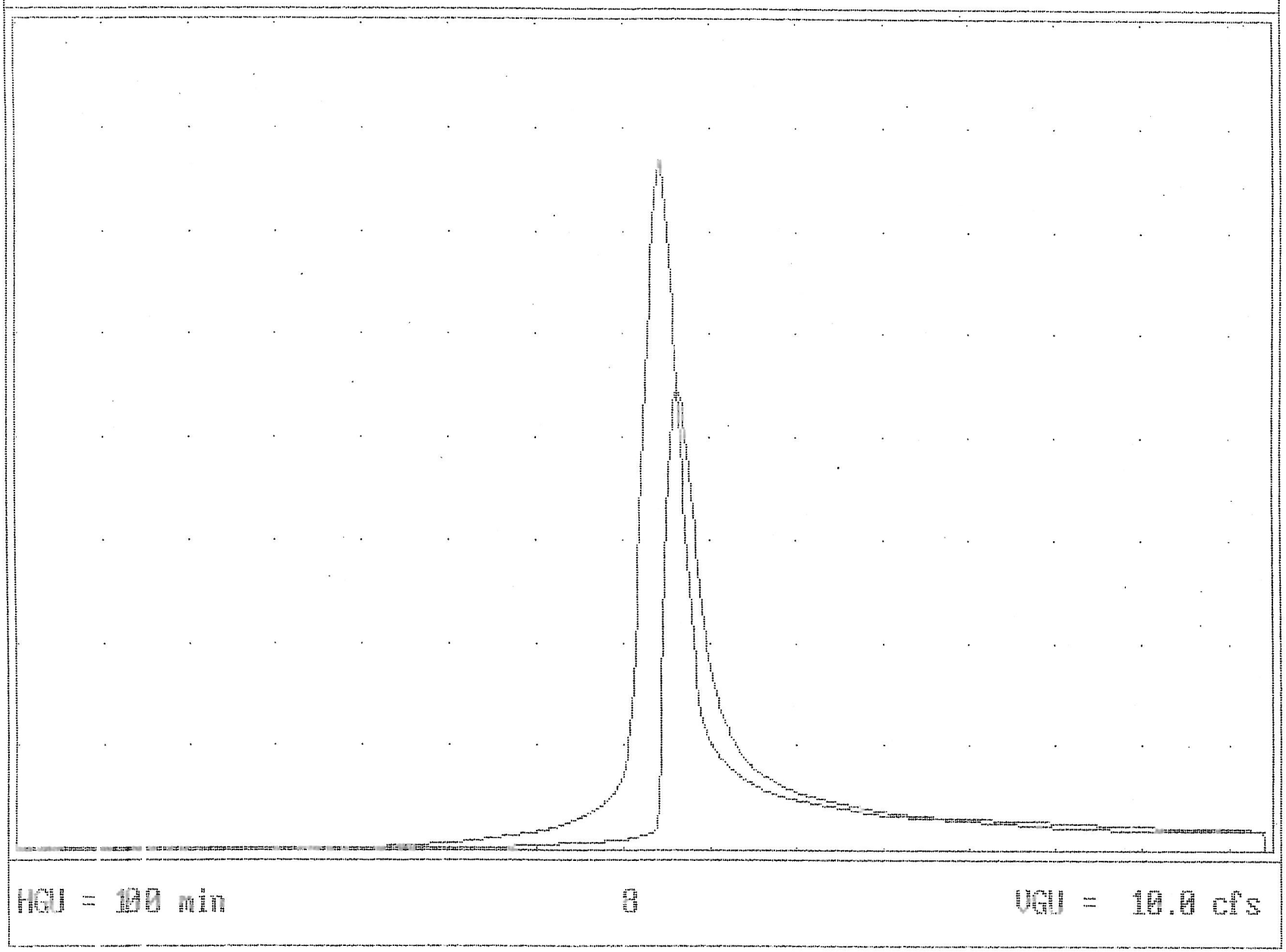

MAX STORAGE = 138844

MAX ELEVATION = 77.38

Qp = 75.2 RESERVOIR ROUTE 100 Yr

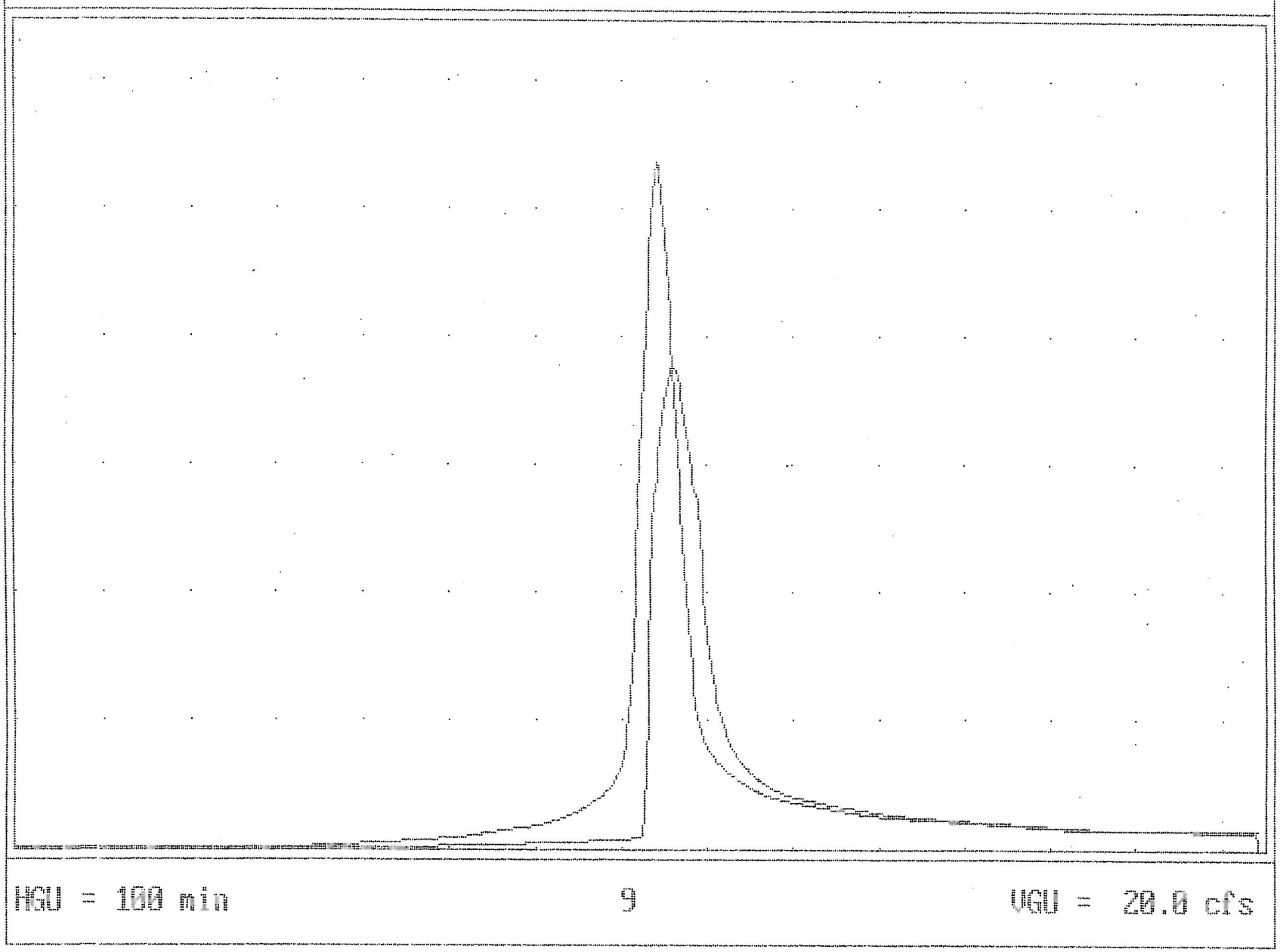

MAX STORAGE = 185518

MAX ELEVATION = 70.46

11.57 EMODE FIBERGLASS 5.55 = 0.0