CERTIFICATE OF AUTHENTICITY

THIS IS TO CERTIFY THAT THE FOLLOWING ELECTRONIC RECORDS ARE TRUE AND ACCURATE REPRODUCTIONS OF THE ORIGINAL RECORDS OF JAMES CITY COUNTY GENERAL SERVICES DEPARTMENT- STORMWATER DIVISION; WERE SCANNED IN THE REGULAR COURSE OF BUSINESS PURSUANT TO GUIDELINES ESTABLISHED BY THE LIBRARY OF VIRGINIA AND ARCHIVES; AND HAVE BEEN VERIFIED IN THE CUSTODY OF THE INDIVIDUAL LISTED BELOW.

BMP NUMBER: **PC100**

DATE VERIFIED: **July 3, 2012**

QUALITY ASSURANCE TECHNICIAN: **Leah Hardenbergh**

Leah Hardenbergh

LOCATION: WILLIAMSBURG, VIRGINIA

Stormwater Division

MEMORANDUM

DATE: March 13, 2010

TO: Michael J. Gillis, Virginia Correctional Enterprises Document Management Services

FROM: Jo Anna Ripley, Stormwater

PO: 270712

RE: Files Approved for Scanning

General File ID or BMP ID: PC100

PIN: 4732300001A

Subdivision, Tract, Business or Owner Name (if known): Holly Ridge

Property Description: Common Open Space, Detention Pond & Conservation Area

Site Address:

(For internal use only) **Box** 1 **Drawer:** 1

Agreements: (in file as of scan date) **N** **Book or Doc#:** **Page:**

Comments

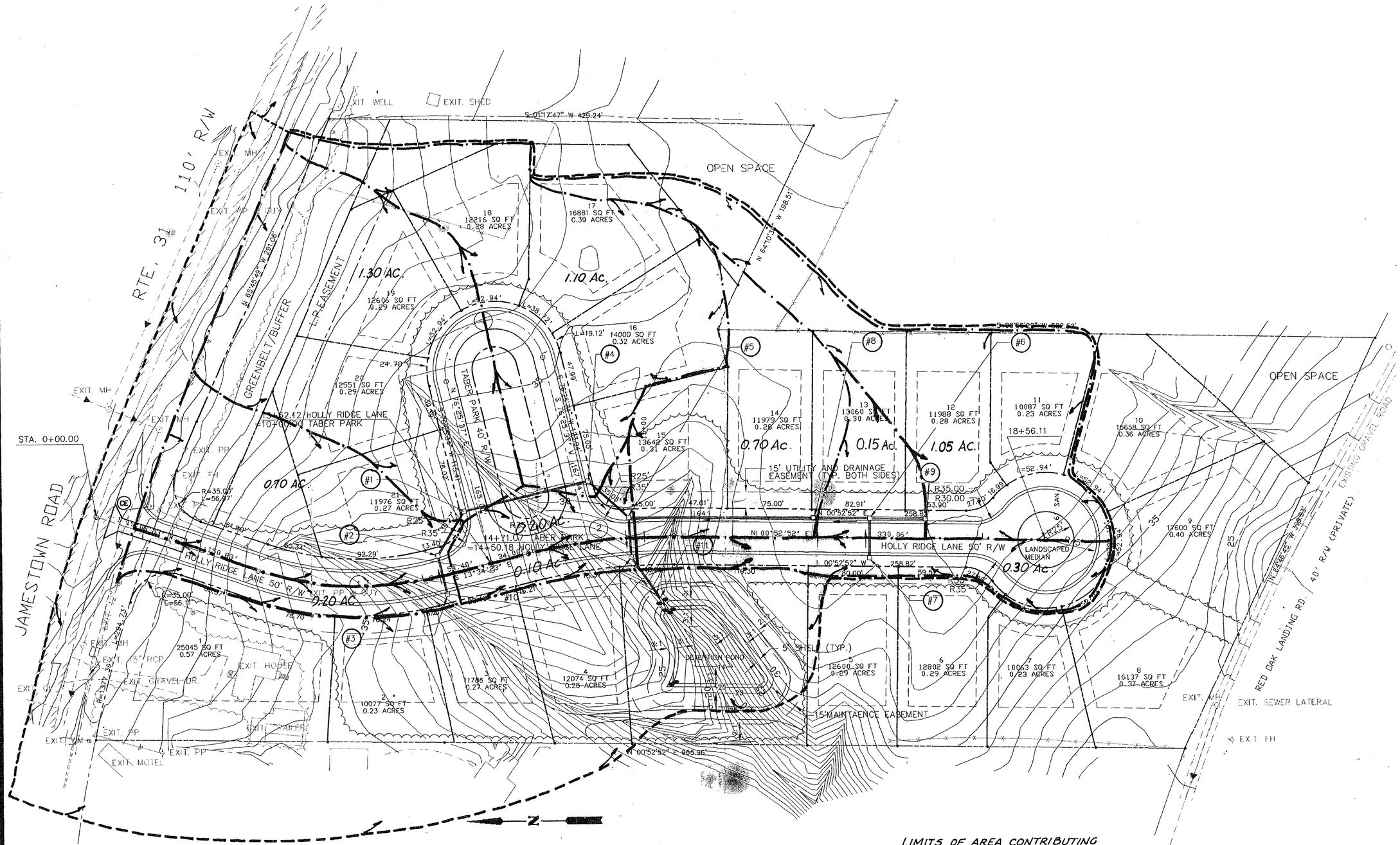

CURVE DATA TABLE									
NO.	△	R	L	T	C	CB	PC	PI	PT
1	32°41'16"	275.00'	156.89'	80.64'	154.77'	S 02°46'15" W	11+50.83	12+31.47	13+07.72
2	14°27'18"	515.00'	129.93'	65.31'	129.58'	S 06°20'44" E	13+96.12	14+61.43	15+26.05
3	180°00'00"	44.00'	138.23'		88.00'	S 13°34'23" E	11+65.00		13+03.23

LIMITS OF AREA CONTRIBUTING TO DETENTION POND - 9.10 Ac.

DRAINAGE RIDGE LINE

REVISIONS

NO.	DATE	DESCRIPTION
1	9/18/95	PER JCC REVIEW COMMENTS, 9/7/95
2	10/18/95	PER JCC REVIEW COMMENTS 10/18/95

ENGINEERS · ARCHITECTS · SURVEYORS
INTERIOR DESIGNERS · PLANNERS
P.O. BOX 3505 WILLIAMSBURG, VIRGINIA 23187 (804)253-0673 (804)874-5015

COMMONWEALTH OF VIRGINIA
WILLIAM D. JOHNSON, JR.
CERTIFICATE No. 7427
9/19/95
CERTIFIED PROFESSIONAL ENGINEER

DRAINAGE AREA MAP

HOLLY RIDGE SUBDIVISION

ASSOCIATED DEVELOPERS, INC.

JAMES CITY COUNTY VIRGINIA

SCALE	1"=40'
DESIGNED	TCS
DRAWN	LBA
CHECKED	WDJ
DATE	8-4-95
COMMISSION NO.	1950620
SHEET	C-9
	10 OF 10

FILENAME: 9506DCC.DWG
DATE: 8-4-95
PLOT SCALE: 1 = 40'

PC100_HOLLY_RIDGE_WET_POND - 003

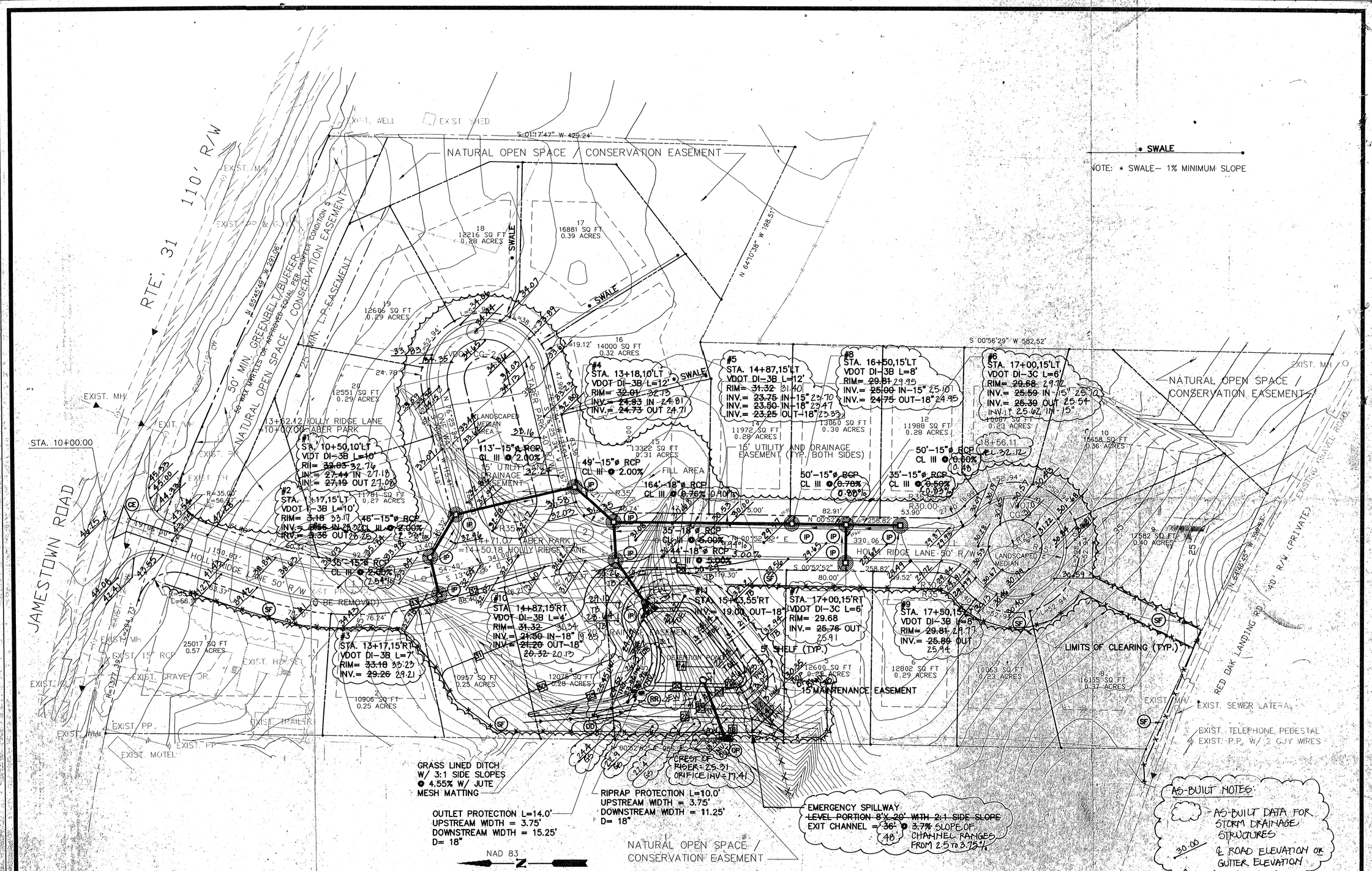

AS-BUILT NOTES:

AS-BUILT DATA FOR STORM DRAINAGE STRUCTURES

30.00 ℄ ROAD ELEVATION OR GUTTER ELEVATION

CURVE DATA TABLE

NO.	Δ	R	L	T	C	CB	PC	PI	PT
1	32°41'16"	275.00'	156.89'	80.64'	154.77'	S 02°46'15" W	11+50.83	12+31.47	13+07.72
2	14°27'18"	515.00'	129.93'	65.31'	129.58'	S 06°20'44" E	13+96.12	14+61.43	15+26.05
3	180°00'00"	44.00'	138.23'		88.00'	S 13°34'23" E	11+65.00		13+03.23

REVISIONS

NO.	DATE	DESCRIPTION
1	9/18/95	PER JCC REVIEW COMMENTS 9/7/95
2	10/18/95	PER JCC REVIEW COMMENTS 10/18/95
3	11/20/95	D1#10 LOWERED PER JCC REVIEW COMMENTS 11/16/95
4.	6/30/97	VDOT AS-BUILTS
5.	3/17/98	DETENTION POND AS-BUILTS

DJG
ENGINEERS · ARCHITECTS · SURVEYORS
INTERIOR DESIGNERS · PLANNERS
P.O. BOX 3305 WILLIAMSBURG, VIRGINIA 23187 (804)253-0673, (804)874-5015

COMMONWEALTH OF VIRGINIA
William D. Johnston, Jr.
CERTIFICATE NO. 7427
7/19/95
REGISTERED PROFESSIONAL ENGINEER

STORM DRAINAGE & E&S

HOLLY RIDGE SUBDIVISION

ASSOCIATED DEVELOPERS, INC.
JAMES CITY COUNTY, VIRGINIA

SCALE	1" = 40'
DESIGNED	TCS
DRAWN	LBA
CHECKED	WDJ
DATE	8-4-95
COMMISSION NO.	1950620
SHEET	C-2 3 OF 10

PC100_HOLLY_RIDGE_WET_POND - 004

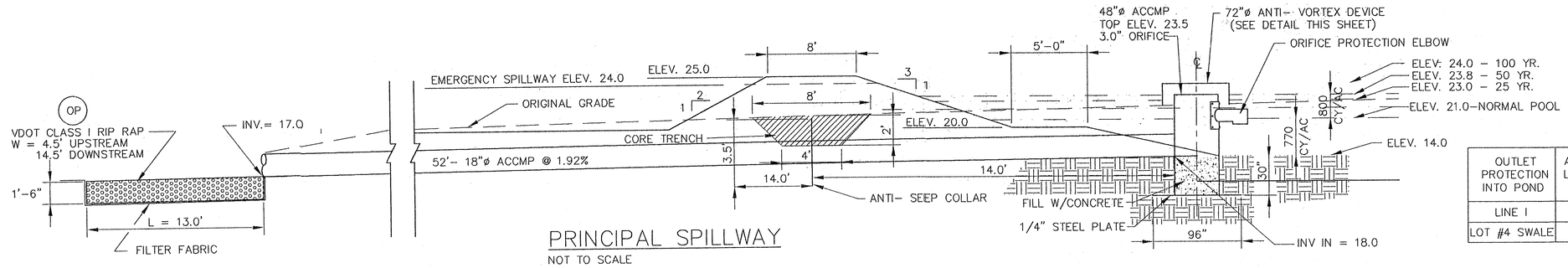

PRINCIPAL SPILLWAY

NOT TO SCALE

OUTLET PROTECTION INTO POND	APRON LENGTH	UPSTREAM WIDTH	DOWNSTREAM WIDTH
LINE I	14.0'	3.75'	15.25'
LOT #4 SWALE	10.0	3.75'	11.25'

NOTES:

ALL UNSUITABLE MATERIAL LOCATED UNDER THE DAM EMBANKMENT SHALL BE REMOVED AND DISPOSED OF BY THE CONTRACTOR.

DENTENTION POND SHALL BE CONSTRUCTED IN ACCORDANCE WITH STD. 1 SPEC. 3.14 - TEMPORARY SEDIMENT BASIN AS OUTLINE IN THE VIRGINIA EROSION AND SEDIMENT CONTROL HANDBOOK, THIRD EDITION , 1990.

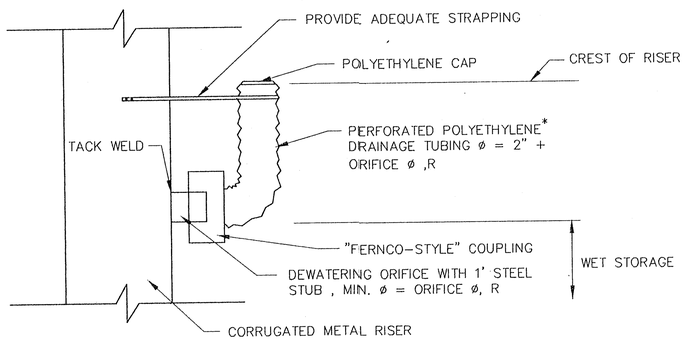

NOTE: WITH CONCRETE RISER USE PVC SCHEDULE 40 STUB FOR DEWATERING ORIFICE.
* DRAINAGE TUBING SHALL COMPLY WITH ASTM F667 AND AASHTO M294

DEWATERING SYSTEM DETAIL

NOT TO SCALE

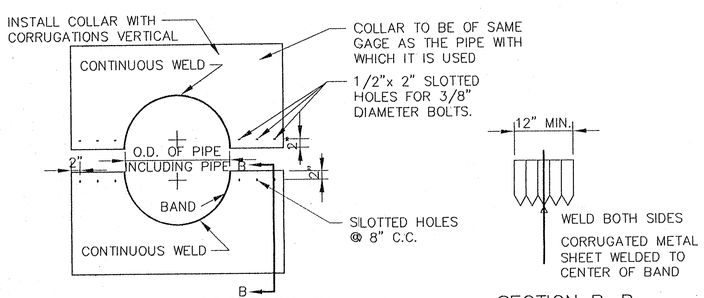

ELEVATION OF UNASSEMBLED COLLAR

SECTION B-B

NOTES FOR COLLAR

1. ALL MATERIALS TO BE IN ACCORDANCE WITH CONSTRUCTION AND CONSTRUCTION MATERIAL SPECIFICATIONS.
2. WHEN SPECIFIED ON THE PLANS, COATING OF COLLARS SHALL BE IN ACCORDANCE WITH CONSTRUCTION AND CONSTRUCTION MATERIAL SPECIFICATIONS.
3. UNASSEMBLED COLLARS SHALL BE MARKED BY PAINTING OR TAGGING TO IDENTIFY MATCHING PAIRS.
4. THE LAP BETWEEN THE PIPE AND CONNECTING BAND SHALL BE CAULKED WITH ASPHALT MASTIC AT TIME OF INSTALLATION.
5. EACH COLLAR SHALL BE FURNISHED WITH TWO 1/2" DIAMETER RODS WITH STANDARD TANK LUGS FOR CONNECTING COLLARS TO PIPE.

ANTI-SEEP COLLAR

NOT TO SCALE

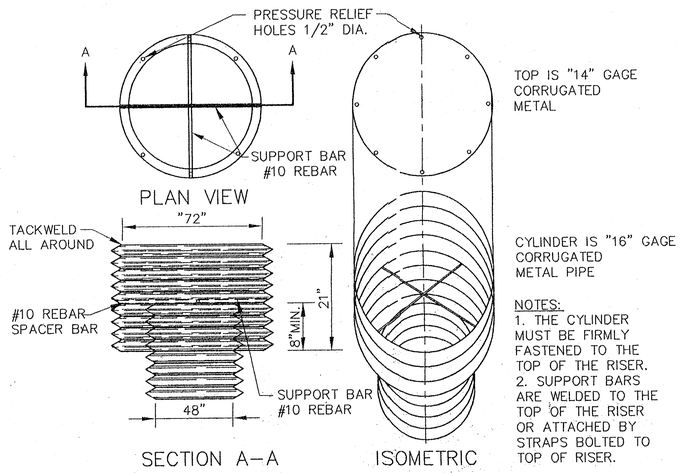

NOTES:

1. THE CYLINDER MUST BE FIRMLY FASTENED TO THE TOP OF THE RISER.
2. SUPPORT BARS ARE WELDED TO THE TOP OF THE RISER OR ATTACHED BY STRAPS BOLTED TO TOP OF RISER.

ANTI-VORTEX DEVICE

NOT TO SCALE

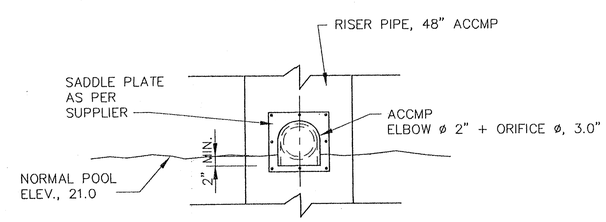

ORIFICE PROTECTION ELBOW

NOT TO SCALE

REVISIONS

NO.	DATE	DESCRIPTION
1	9/18/95	PER JCC REVIEW COMMENTS 9/7/95
2	10/18/95	PER JCC REVIEW COMMENTS 10/18/95

ENGINEERS · ARCHITECTS · SURVEYORS
INTERIOR DESIGNERS · PLANNERS
P.O. BOX 3305 WILLIAMSBURG, VIRGINIA 23187 (804)253-0673 (804)874-5015

COMMONWEALTH OF VIRGINIA
William D. Johnson, Jr.
74271
CERTIFICATE No.
9/18/95
CERTIFIED PROFESSIONAL ENGINEER

STORMWATER PONDS & DETAILS

HOLLY RIDGE SUBDIVISION
ASSOCIATED DEVELOPERS, INC
JAMES CITY COUNTY VIRGINIA

SCALE	AS SHOWN
DESIGNED	TCS
DRAWN	LBA
CHECKED	WDJ
DATE	8-4-95
COMMISSION NO.	1950620
SHEET	C-4
	5 OF 10

FILENAME: 1950620C.DWG
DATE: 9/18/95
PLOT SCALE: 1/4" = 1'-0"

PC100_HOLLY_RIDGE_WET_POND - 005

STORMWATER DRAINAGE AND BMP CALCULATIONS

FOR

HOLLY RIDGE SUBDIVISION

BY

DJG, INC.
1006 RICHMOND ROAD
WILLIAMSBURG, VA 23185

DJG COMMISSION NO. 1950620

Assume Cleanout (Post) at 10% WQV

21,140 cF (0.10) = 2,114.00 cF = 78.29 c.y.

Approx. Wet

	EST AB.	SS
14° =	525 SF	640
20°	4500 SF	

16° = 2240 cF
x 2114
18 = 4500 cF

14° 0
x 2114
16° 2240

$$\frac{x-14}{2} = \frac{2114}{2240}$$

$2240(x-14) = 4228$

$x - 14 = 1.887$

$x = 15.88$

CLEANOUT
EL 15.88'
D = 1.88'

DJG
P.O. Box 3505
Williamsburg, Virginia 23187
(804) 253-0673
Fax (804) 253-2319

PROJECT HOLLY RIDGE
DATE 8-1-95 COMM NO.
CAL HLPG CKD PAGE # 1 of 8
TITLE DETENTION POND DESIGN

I. WETPOND DESIGN #7 (4.0 × V_R):

$V_R = 0.5 \times R_V \times A \times 3630$

$R_V = 0.05 + 0.009 \times I$

I = (1/3 ACRE LOTS FROM E & S pg I-57) ⇒ 30% IMPERVIOUS

A = 7.18 AC (ON-SITE TO POND)
1.92 AC (OFF-SITE TO POND)
9.10 AC

$4.0 \times V_R$ = **21,140 ft³** = VOLUME NEEDED

II. E & S REQUIREMENTS = 67 yd³ WET STORAGE
67 yd³ DRY STORAGE
134 yd³ PER DISTURBED ACRE
DRAINAGE

DISTURBED ACREAGE = 8.2 AC

8.2 AC × 134 yd³/AC × 27 ft³/yd³ = **29,670 ft³** = VOLUME NEEDED

III. POND SIZING & STORM ROUTING:

- BASIN STORAGE TO 5' LEVEL SHELF @ 20.0:

ELEV	AREA (ft²)	Σ(Ai + Aj)/2	VOL. (ft³)	Σ VOL. (ft³)	
14.0	640	–	–	–	
16.0	1600	1120	2240	2240	21,140 ft³ REQ'D
18.0	2900	2250	4500	6740	14,140 ft³ PROVIDED
20.0	4500	3700	7400	14140	7000 ft³ NEEDED

- STORAGE ABOVE 5' LEVEL SHELF @ 20.0:

ELEV	AREA (ft²)	Σ(Ai+Aj)/2	VOL. (ft³)	Σ VOL. (ft³)
20.0	6100	–	–	–
21.0	7200	6650	6650	6650
23.0	9400	8300	16600	23250

DJG
P.O. Box 3505
Williamsburg, Virginia 23187
(804) 253-0673
Fax (804) 253-2319

PROJECT HOLLY RIDGE
DATE 8-1-95 COMM NO.
CAL HLPG CKD PAGE # 2 OF 8
TITLE DETENTION POND DESIGN

• STORAGE ALGORITHM: $z_1 = 1.0$ $z_2 = 3.0$
$S_1 = 6650$ $S_2 = 23250$

$$b = \frac{\ln\left(\frac{S_2}{S_1}\right)}{\ln\left(\frac{z_2}{z_1}\right)} = 1.14 \Rightarrow K_s = \frac{S_2}{z_2^b} = 6650 \Rightarrow z = \left(\frac{7000}{6650}\right)^{1/1.14} \approx 1.0$$

$$\therefore 20.0 + 1.0 = \boxed{21.0} = \text{NORMAL SURFACE}$$

• STORAGE ABOVE NORMAL SURFACE @ 21.0:

ELEV.	AREA (ft^2)	$\Sigma(A_i+A_j)/2$	VOL. (ft^3)	Σ VOL. (ft^3)
21.0	7200	—	—	—
23.0	9400	8300	16600	16600
25.0	11645	10522	21045	37645

• STORAGE ALGORITHM: $z_1 = 2.0$ $z_2 = 4.0$
$S_1 = 16600$ $S_2 = 37645$

$$b = \frac{\ln\left(\frac{S_2}{S_1}\right)}{\ln\left(\frac{z_1}{z_2}\right)} = 1.18 \Rightarrow K_s = \frac{S_2}{z_2^b} = 7320.0 \Rightarrow S = 7320\left(z^{1.18}\right)$$

• OUTLET STRUCTURE: ORIFICE: 3" $Q = CA\sqrt{2gH_o}$ $C = 0.6$ $A = 0.0491\ ft^2$
RISER: 48" CMP
BARREL: 50' - 18" CMP, C.F. = 1.12 $ELEV_{IN} = 18.0$, $ELEV_{OUT} = 17.0$

• STAGE - STORAGE - DISCHARGE:

ELEV.	STAGE	H_p	Q_p	H_o	Q_o	ΣQ (ft^3/sec)	STORAGE (ft^3)
21.0	—	—	—	—	—	—	—
21.5	0.5	—	—	0.37	0.14	0.14	3228
22.0	1.0	—	—	0.87	0.22	0.22	7320
22.5	1.5	—	—	1.37	0.28	0.28	11818
23.0	2.0	—	—	1.87	0.32	0.32	16600
C.R. 23.5	2.5	—	—	2.37	0.36	0.36	21607
24.0	3.0	6.0	(R) 13.8	2.87	0.40	14.2	26799
24.5	3.5	6.5	15.6	3.37	0.43	16.0	32151

WET POND
BMP DESIGN 7

Volume of permanent pool equal to 4 * Vr; where Vr = volume of runoff generated by the mean storm over the contributing onsite watershed. (offsite area included if credit is taken)

Volume: Vp = 4 * Vr

Vp = volume of permanent pool

Vr = 0.5 * Rv * A * 3630

Rv = 0.05 + 0.009 * I

I = percent impervious cover of the contributing onsite watershed (offsite area included if credit is taken) (expressed as a whole number)

A = area of contributing onsite watershed (acres) (offsite area included if credit is taken)

3630 = conversion factor (cu.ft./acre-in)

Vr = 0.5 * (0.05 + 0.009 * 30%) * 9.1 * 3630

Vr = 5285.28 cu.ft.

Vp = 4.0 * 5285.28 = 21,140 cu.ft.

Although Qin may equal Qout for this facility, any stormwater management concerns should be addressed. Storage volume for stormwater management purposes begins at the maximum elevation of the permanent pool.

E&S VOLUME = (8.2 AC DISTURBED) × (134 yd³ / AC. DIST.) × (27 ft³ / yd³) = 29,670 ft³

* 29,670 ft³ > 21,140 ft³ ∴ POND MUST HAVE VOLUME ≥ 29,670 ft³

CONSTRUCTION PLANS SHALL INCLUDE THE FINAL DETAILED BMP DESIGN

HOLLY RIDGE PRE-DEVELOPMENT

HOLLY RIDGE PRE-DEVELOPMENT

INPUT DESIGN DATA

DESIGN STORM FOR ANALYSIS = 2 YEAR
DRAINAGE AREA (ACRES) = 8
AVERAGE SLOPE OF DRAINAGE AREA (%) = 4.6
HYDRAULIC LENGTH (FT) = 725
IMPERVIOUS SURFACE (%) = 5
HYDRAULIC LENGTH MODIFIED (%) = 42 check these
COMPOSITE CURVE NUMBER = 71.5
SLOPE ADJUSTMENT FACTOR = 1
PONDING ADJUSTMENT FACTOR = .74

RESULTS OF HYDRAULIC CALCULATIONS
(SCS TR-55 & TP-149 PROCEDURES)

WATERSHED LAG ADJUSTED (IMPER. AREAS & CHAN. IMPROV.) IS .101 HOURS
TIME OF CONCENTRATION ADJUSTED IS .169 HOURS - 10 min - too short
THE PEAK DISCHARGE FROM THIS WATERSHED IS 8 C.F.S.

THE FOLLOWING ARE TIME INCREMENTS AND ORDINATES OF THE
INFLOW HYDROGRAPH

(HOURS)	(C.F.S.)
0,0	
.04	.23
.081	.835
.121	1.955
.162	3.339
.202	4.859
.243	6.386
.283	7.792
.324	8.015001
.364	7.05
.405	4.889
.445	3.037
.485	1.563
.526	.533
.566	0

HOLLY RIDGE POST-DEVELOPMENT

HOLLY RIDGE POST-DEVELOPMENT

INPUT DESIGN DATA

DESIGN STORM FOR ANALYSIS = 2 YEAR
DRAINAGE AREA (ACRES) = 9.100001
AVERAGE SLOPE OF DRAINAGE AREA (%) = 4
HYDRAULIC LENGTH (FT) = 680
IMPERVIOUS SURFACE (%) = 33
HYDRAULIC LENGTH MODIFIED (%) = 76
COMPOSITE CURVE NUMBER = 81.3
SLOPE ADJUSTMENT FACTOR = 1
PONDING ADJUSTMENT FACTOR = .74

RESULTS OF HYDRAULIC CALCULATIONS
(SCS TR-55 & TP-149 PROCEDURES)

WATERSHED LAG ADJUSTED (IMPER. AREAS & CHAN. IMPROV.) IS .052 HOURS
TIME OF CONCENTRATION ADJUSTED IS .086 HOURS
THE PEAK DISCHARGE FROM THIS WATERSHED IS 16 C.F.S.

THE FOLLOWING ARE TIME INCREMENTS AND ORDINATES OF THE
INFLOW HYDROGRAPH

(HOURS)	(C.F.S.)
0,0	
.021	1.076
.041	3.338
.062	6.829
.083	9.934
.104	12.519
.124	14.568

.145	15.96
.166	15.145
.187	12.687
.207	8.576
.228	5.204
.249	2.631
.27	.887
.29	0

STAGE (FT)	DISCHARGE (CFS)	STORAGE (CF)
0	0	0
.5	.14	3228
1	.22	7320
1.5	.28	11818
2	.32	16600

THE FOLLOWING ARE TIME INCREMENTS AND ORDINATES OF THE OUTFLOW HYDOGRAPH

(HOURS)	(C.F.S.)
0.000	0.002
0.021	0.009
0.041	0.025
0.062	0.052
0.083	0.088
0.104	0.132
0.124	0.158
0.145	0.181
0.166	0.201
0.187	0.216
0.207	0.224
0.228	0.228
0.249	0.229
0.270	0.229
0.290	0.229
0.311	0.229
0.332	0.229
0.352	0.228
0.373	0.228
0.394	0.228
0.415	0.228
0.435	0.228
0.456	0.227
0.477	0.227
0.498	0.227
0.518	0.227
0.539	0.226
0.560	0.226
0.580	0.226
0.601	0.226
0.622	0.226
0.643	0.225
0.663	0.225
0.684	0.225
0.705	0.225
0.726	0.224
0.746	0.224
0.767	0.224
0.788	0.224

MAXIMUM OUTFLOW IS .229 C.F.S. 22.075
MAXIMUM STAGE IS 1.075 FT.
MAXIMUM STORAGE IS 7994 CUBIC FEET

HOLLY RIDGE POST-DEVELOPMENT

HOLLY RIDGE POST-DEVELOPMENT

INPUT DESIGN DATA

DESIGN STORM FOR ANALYSIS = 10 YEAR
DRAINAGE AREA (ACRES) = 9.100001
AVERAGE SLOPE OF DRAINAGE AREA (%) = 4
HYDRAULIC LENGTH (FT) = 680
IMPERVIOUS SURFACE (%) = 33
HYDRAULIC LENGTH MODIFIED (%) = 76
COMPOSITE CURVE NUMBER = 81.3
SLOPE ADJUSTMENT FACTOR = 1
PONDING ADJUSTMENT FACTOR = .76

RESULTS OF HYDRAULIC CALCULATIONS
(SCS TR-55 & TP-149 PROCEDURES)

WATERSHED LAG ADJUSTED (IMPER. AREAS & CHAN. IMPROV.) IS .052 HOURS
TIME OF CONCENTRATION ADJUSTED IS .086 HOURS
THE PEAK DISCHARGE FROM THIS WATERSHED IS 35 C.F.S.

THE FOLLOWING ARE TIME INCREMENTS AND ORDINATES OF THE
INFLOW HYDROGRAPH

(HOURS)	(C.F.S.)
0,0	
.021	2.456
.041	7.576
.062	15.413
.083	22.229
.104	27.748
.124	31.957
.145	34.617
.166	32.531
.187	27.059
.207	18.22
.228	11.011
.249	5.547
.27	1.862
.29	0

STAGE (FT)	DISCHARGE (CFS)	STORAGE (CF)
0	0	0
.5	.14	3228
1	.22	7320
1.5	.28	11818
2	.32	16600
2.5	.36	21607
3	14.2	26799

THE FOLLOWING ARE TIME INCREMENTS AND ORDINATES OF THE
OUTFLOW HYDOGRAPH

(HOURS)	(C.F.S.)
0.000	0.004
0.021	0.020
0.041	0.057
0.062	0.118
0.083	0.166
0.104	0.210
0.124	0.246
0.145	0.279
0.166	0.298
0.187	0.312
0.207	0.321

0.228	0.325
0.249	0.327
0.270	0.328
0.290	0.328
0.311	0.327
0.332	0.327
0.352	0.327
0.373	0.327
0.394	0.327
0.415	0.326
0.435	0.326
0.456	0.326
0.477	0.326
0.498	0.326
0.518	0.325
0.539	0.325
0.560	0.325
0.580	0.325
0.601	0.325
0.622	0.324
0.643	0.324
0.663	0.324
0.684	0.324
0.705	0.324
0.726	0.323
0.746	0.323
0.767	0.323
0.788	0.323

MAXIMUM OUTFLOW IS .328 C.F.S.
MAXIMUM STAGE IS 2.1 FT. — 231
MAXIMUM STORAGE IS 17601 CUBIC FEET

HOLLY RIDGE POST-DEVELOPMENT

HOLLY RIDGE POST-DEVELOPMENT

INPUT DESIGN DATA

DESIGN STORM FOR ANALYSIS = 25 YEAR
DRAINAGE AREA (ACRES) = 9.100001
AVERAGE SLOPE OF DRAINAGE AREA (%) = 4
HYDRAULIC LENGTH (FT) = 680
IMPERVIOUS SURFACE (%) = 33
HYDRAULIC LENGTH MODIFIED (%) = 76
COMPOSITE CURVE NUMBER = 81.3
SLOPE ADJUSTMENT FACTOR = 1
PONDING ADJUSTMENT FACTOR = .79

RESULTS OF HYDRAULIC CALCULATIONS
(SCS TR-55 & TP-149 PROCEDURES)

WATERSHED LAG ADJUSTED (IMPER. AREAS & CHAN. IMPROV.) IS .052 HOURS
TIME OF CONCENTRATION ADJUSTED IS .086 HOURS
THE PEAK DISCHARGE FROM THIS WATERSHED IS 42 C.F.S.

THE FOLLOWING ARE TIME INCREMENTS AND ORDINATES OF THE
INFLOW HYDROGRAPH

(HOURS)	(C.F.S.)
0,0	
.021	3.039
.041	9.363
.062	19.03
.083	27.403
.104	34.15
.124	39.258
.145	42.44 ←
.166	39.813
.187	33.074
.207	22.254
.228	13.439
.249	6.765
.27	2.27
.29	0

STAGE (FT)	DISCHARGE (CFS)	STORAGE (CF)
0	0	0
.5	.14	3228
1	.22	7320
1.5	.28	11818
2	.32	16600
2.5	.36	21607
3	14.2	26799
3.5	16	32151

THE FOLLOWING ARE TIME INCREMENTS AND ORDINATES OF THE OUTFLOW HYDOGRAPH

(HOURS)	(C.F.S.)
0.000	0.005
0.021	0.025
0.041	0.071
0.062	0.142
0.083	0.187
0.104	0.234
0.124	0.274
0.145	0.302
0.166	0.324
0.187	0.341
0.207	0.351
0.228	0.357
0.249	0.359
0.270	0.360
0.290	0.360
0.311	0.359
0.332	0.359
0.352	0.359
0.373	0.359
0.394	0.358
0.415	0.358
0.435	0.358
0.456	0.358
0.477	0.358
0.498	0.357
0.518	0.357
0.539	0.357
0.560	0.357
0.580	0.357
0.601	0.356
0.622	0.356
0.643	0.356
0.663	0.356
0.684	0.356
0.705	0.355
0.726	0.355
0.746	0.355
0.767	0.355
0.788	0.354

should be 2.5'

some problem here < 10 yr.

MAXIMUM OUTFLOW IS .36 C.F.S.
MAXIMUM STAGE IS 2.002882 FT.
MAXIMUM STORAGE IS 16629 CUBIC FEET

HOLLY RIDGE POST-DEVELOPMENT

HOLLY RIDGE POST-DEVELOPMENT

INPUT DESIGN DATA

DESIGN STORM FOR ANALYSIS = 100 YEAR
DRAINAGE AREA (ACRES) = 9.100001
AVERAGE SLOPE OF DRAINAGE AREA (%) = 4
HYDRAULIC LENGTH (FT) = 680
IMPERVIOUS SURFACE (%) = 33
HYDRAULIC LENGTH MODIFIED (%) = 76
COMPOSITE CURVE NUMBER = 81.3
SLOPE ADJUSTMENT FACTOR = 1
PONDING ADJUSTMENT FACTOR = .86

RESULTS OF HYDRAULIC CALCULATIONS
(SCS TR-55 & TP-149 PROCEDURES)

WATERSHED LAG ADJUSTED (IMPER. AREAS & CHAN. IMPROV.) IS .052 HOURS
TIME OF CONCENTRATION ADJUSTED IS .086 HOURS
THE PEAK DISCHARGE FROM THIS WATERSHED IS 60 C.F.S.

THE FOLLOWING ARE TIME INCREMENTS AND ORDINATES OF THE
INFLOW HYDROGRAPH

(HOURS)	(C.F.S.)
0,0	
.021	4.373
.041	13.454
.062	27.307
.083	39.238
.104	48.78
.124	55.93
.145	60.29
.166	56.417
.187	46.781
.207	31.444
.228	18.97
.249	9.54
.27	3.197
.29	0

STAGE (FT)	DISCHARGE (CFS)	STORAGE (CF)
0	0	0
.5	.14	3228
1	.22	7320
1.5	.28	11818
2	.32	16600
2.5	.36	21607
3	14.2	26799
3.5	16	32151

THE FOLLOWING ARE TIME INCREMENTS AND ORDINATES OF THE
OUTFLOW HYDOGRAPH

(HOURS)	(C.F.S.)
0.000	0.007
0.021	0.036
0.041	0.102
0.062	0.171
0.083	0.230
0.104	0.281
0.124	0.317
0.145	0.352
0.166	7.236
0.187	13.004

0.207	14.339
0.228	14.337
0.249	13.755
0.270	11.555
0.290	9.464
0.311	7.752
0.332	6.349
0.352	5.200
0.373	4.259
0.394	3.489
0.415	2.857
0.435	2.340
0.456	1.917
0.477	1.570
0.498	1.286
0.518	1.053
0.539	0.863
0.560	0.707
0.580	0.579
0.601	0.474
0.622	0.388
0.643	0.360
0.663	0.360
0.684	0.359
0.705	0.359
0.726	0.359
0.746	0.359
0.767	0.359
0.788	0.358

MAXIMUM OUTFLOW IS 14.339 C.F.S.
MAXIMUM STAGE IS 3.038611 FT. - 24.0 -
MAXIMUM STORAGE IS 27212 CUBIC FEET

TEMPORARY SEDIMENT BASIN DESIGN DATA SHEET

(with or without an emergency spillway)

Project HOLLY RIDGE

Basin # _____ Location JAMES CITY COUNTY

Total area draining to basin: 9.1 acres.

Basin Volume Design

Wet Storage:

1. Minimum required volume = 67 cu. yds. x Total Drainage Area (acres).

   67 cu. yds. x 9.1 acres = 610 cu. yds. 16,462 ft^3

2. Available basin volume = 770 cu. yds. at elevation 21.0. (From storage - elevation curve)

3. Excavate 680 cu. yds. to obtain required volume*.
   APPROX.
   * Elevation corresponding to required volume = invert of the dewatering orifice.

4. Available volume before cleanout required.

   33 cu. yds. x 9.1 acres = 300 cu. yds.

5. Elevation corresponding to cleanout level = 22.2.

   (From Storage - Elevation Curve)

6. Distance from invert of the dewatering orifice to cleanout level = 1.2 ft. (Min. = 1.0 ft.)

Dry Storage:

7. Minimum required volume = 67 cu. yds. x Total Drainage Area (acres).

   67 cu. yds. x 9.1 acres = 610 cu. yds.

610 CY

8. Total available basin volume at crest of riser* = 1570 cu. yds. at elevation 23.5. (From Storage - Elevation Curve)

* Minimum = 134 cu. yds./acre of total drainage area.

9. Diameter of dewatering orifice = 3.0 in.

10. Diameter of flexible tubing = 5.0 in. (diameter of dewatering orifice plus 2 inches).

Preliminary Design Elevations

11. Crest of Riser = 23.5

Top of Dam = 25.0

Design High Water = 24.0

Upstream Toe of Dam = 14.0

Basin Shape

12. Length of Flow / Effective Width — L / We = 45' / 90' = 2

If ≥ 2, baffles are not required ✓

If < 2, baffles are required N/A

Runoff

13. Q_2 = 0.229 cfs (From Chapter 5)

14. Q_{25} = 0.36 cfs (From Chapter 5)

Principal Spillway Design

15. With emergency spillway, required spillway capacity $Q_p = Q_2$ = 0.229 cfs. (riser and barrel)

Without emergency spillway, required spillway capacity $Q_p = Q_{25}$ = N/A cfs. (riser and barrel)

16. With emergency spillway:

Assumed available head (h) = 0.5' ft. (Using Q_2)

h = Crest of Emergency Spillway Elevation - Crest of Riser Elevation

Without emergency spillway:

Assumed available head (h) = N/A ft. (Using Q_{25})

h = Design High Water Elevation - Crest of Riser Elevation

17. Riser diameter (D_r) = 48 in. Actual head (h) = 0.54 ft.

(From Plate 3.14-8.)

Note: Avoid orifice flow conditions.

18. Barrel length (l) = 50 ft.

Head (H) on barrel through embankment = 6 ft.

(From Plate 3.14-7).

19. Barrel diameter = 18 in.

(From Plate 3.14-B [concrete pipe] or Plate 3.14-A [corrugated pipe]).

20. Trash rack and anti-vortex device

Diameter = 72 inches.

Height = 21 inches.

(From Table 3.14-D).

Emergency Spillway Design

21. Required spillway capacity $Q_e = Q_{25} - Q_p$ = 0.131 cfs.

22. Bottom width (b) = 8 ft.; the slope of the exit channel (s) = 2.7 ft./foot; and the minimum length of the exit channel (x) = 32.0 ft.
(From Table 3.14-C).

Anti-Seep Collar Design

23. Depth of water at principal spillway crest (Y) = 5.5 ft.

Slope of upstream face of embankment (Z) = 3:1 :1.

Slope of principal spillway barrel (S_b) = 2.0 %

Length of barrel in saturated zone (L_s) = 42 ft.

24. Number of collars required = 2 dimensions = 3.5' x 3.5'

(from Plate 3.14-12).

Final Design Elevations

25. Top of Dam = 25.0

Design High Water = 24.0

Emergency Spillway Crest = 24.0

Principal Spillway Crest = 23.5

Dewatering Orifice Invert = 21.0

Cleanout Elevation = 22.2

Elevation of Upstream Toe of Dam or Excavated Bottom of "Wet Storage Area" (if excavation was performed) = 14.0

DJG
P.O. Box 3505
Williamsburg, Virginia 23187
(804) 253-0673
Fax (804) 253-2319

PROJECT Holly Ridge
DATE 8-1-95 COMM NO.
CAL HLPG CKD PAGE # 3 OF 8
TITLE DETENTION POND DESIGN

DRAWDOWN CALCULATIONS:

4" @ 2' head
Q = 0.76

16,462 .76 cfs

$Q = S/21{,}600 \text{ sec.} \Rightarrow Q = 21{,}607 ft^3/21{,}600 \text{ sec} = 1.0 \text{ cfs}$

$A = \dfrac{Q}{(64.32 \times h/2)^{1/2} 0.6} \Rightarrow A = \dfrac{1.0 \text{ cfs}}{(64.32 \times \frac{0.79}{2})^{1/2} 0.6} = 0.33 ft^2$

$d = 2 \times \left(\dfrac{A}{3.14}\right)^{1/2} \Rightarrow d = 0.65''$ * $d_{MIN.} = 3.0''$ ∴ $\boxed{d = 3.0''}$ ✓

ANTI-SEEP COLLAR CALCULATIONS: (USING E&S PLATE 3.14-11)

Y = 5.5'
S = 2.0% (UPSTREAM EMBANKMENT SLOPE = 3:1)
L_S = 42'
PIPE DIAMETER = 18.0"
⇒ 2 COLLARS, 3.5' x 3.5'

CORE TRENCH DETAIL:

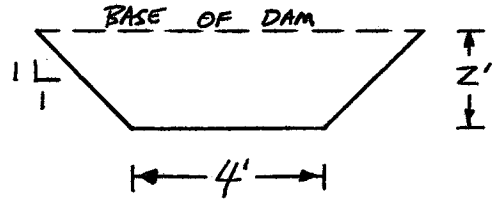

* CORE TRENCH RUNS ALONG CENTERLINE OF DAM, UP EMBANKMENT, TO ELEVATION OF 23.5.

ANTI-VORTEX DESIGN: (USING E&S TABLE 3.14-D)

RISER DIA. = 48"
CYLINDER DIA. = 72" THICKNESS = 16 ga.
HEIGHT = 21"
SUPPORT/SPACER BAR = 1¼" PIPE
TOP THICKNESS = 14 ga. (CORREGATED)

DJG
P.O. Box 3505
Williamsburg, Virginia 23187
(804) 253-0673
Fax (804) 253-2319

OUTLET PROTECTION FOR BARREL:

PIPE DIA. = 18.0" Q_p (100-YR) = 14.2 cfs

- ASSUME MIN. TAILWATER DEPTH
- APRON LENGTH = 13' (ESS PLATE 3.18-3)
- APRON WIDTH UPSTREAM = 3 × DIA. = 4.5'
  DOWNSTREAM = DIA. + A. LENGTH = 14.5'
- RIPRAP: d_{50} = 6"
  depth = 18" MIN.

BMP POINT CREDIT CALCULATIONS:

- TOTAL SITE ACREAGE = 10.11 AC ±
- OPEN SPACE = 1.92 AC. ± NOS? where bit -

$$\frac{1.92\,AC}{10.11\,AC} \times 10 = 1.90 \text{ pts.}$$

- WET POND DESIGN # 7 (4.0 × VR)
  ON-SITE SERVED = 7.18 AC. ±
  OFF-SITE SERVED = 1.92 AC. ±
  TOTAL = 9.10 AC. ±

$$\frac{9.10\,AC}{10.11\,AC} \times 9 = 8.10 \text{ pts.}$$

- TOTAL SITE CREDIT: OPEN SPACE POINTS + POND POINTS

1.90 pts + 8.10 pts = **10 pts**

DJG
P.O. Box 3505
Williamsburg, Virginia 23187
(804) 253-0673
Fax (804) 253-2319

PROJECT Holly Ridge
DATE 8-2-95 COMM NO.
CAL HLPG CKD PAGE # 5 of 8
TITLE CURB & GUTTER SYSTEM CALCULATIONS

1 · LEFT HAND SIDE – STATION 10+50 ROAD B

$$L = KQ^{0.42} S^{0.3} \left(\frac{1}{nS_x}\right)^{0.6}$$

$K = 0.6$

$Q = CiA = (0.6)(4.5\ in/hr)(1.3\ ac) = 3.51\ cfs$

$S = \left(\frac{34.4 - 32.6}{191}\right) = 0.009$

$n = 0.013$

$S_x = 0.1667\ ft$

$L = 9.95' \Rightarrow$ 10' (DI-3B) @ 10+50 LEFT (ROAD B) = TOTAL INTERCEPTION

#2 · LEFT HAND SIDE – STATION 13+16 ROAD A

$$L = KQ^{0.42} S^{0.3} \left(\frac{1}{nS_x}\right)^{0.6}$$

$K = 0.6$

$Q = CiA = (0.6)(4.5\ in/hr)(0.7\ ac) = 1.89\ cfs$

$S = \left(\frac{45.0 - 33.2}{300}\right) = 0.0393$

$n = 0.013$

$S_x = 0.1667\ ft$

$L = 11.8' \Rightarrow$ 12' (DI-3B) @ 13+16 LEFT (ROAD A) = TOTAL INTERCEPTION

#3 · RIGHT HAND SIDE – STATION 13+16 ROAD A

$$L = KQ^{0.42} S^{0.3} \left(\frac{1}{nS_x}\right)^{0.6}$$

$K = 0.6$

$Q = CiA = (0.6)(4.5\ in/hr)(0.2\ ac) = 0.54\ cfs$

$S = 0.0393$ (SAME AS ABOVE)

$n = 0.13$

$S_x = 0.1667$

$L = 6.96' \Rightarrow L = 7'$ (DI-3B) @ 13+16 RIGHT (ROAD A) = TOTAL INTERCEPTION

DJG
P.O. Box 3505
Williamsburg, Virginia 23187
(804) 253-0673
Fax (804) 253-2319

PROJECT HOLLY RIDGE
DATE 8-2-95 COMM NO.
CAL HLPG CKD PAGE # 6 OF 8
TITLE CURB & GUTTER SYSTEM CALCULATIONS

4 · LEFT HAND SIDE – STATION 14+21 ROAD B

$$L = KQ^{0.42}S^{0.3}\left(\frac{1}{nS_x}\right)^{0.6}$$

$K = 0.6$

$Q = CiA = (0.6)(4.5\,in/hr)(1.1\,Ac) = 2.97\,cfs$

$S = \left(\frac{34.4 - 31.95}{184}\right) = 0.013$

$n = 0.013$

$S_x = 0.1667\,ft$

$L = 10.3' \Rightarrow$ 12.0' (DI-3B) @ 14+21 LEFT (ROAD B) = TOTAL INTERCEPTION

#5 · LEFT HAND SIDE – STATION 14+96 ROAD A

$$L = KQ^{0.42}S^{0.3}\left(\frac{1}{nS_x}\right)^{0.6}$$

$K = 0.6$

$Q = CiA = (0.6)(4.5\,in/hr)(0.2\,Ac) = 0.54\,cfs$

$S = \frac{33.2 - 31.3}{170} = 0.0112$

$n = 0.013$

$S_x = 0.1667$

$L = 4.8' \Rightarrow$ 6.0' (DI-3B) @ 14+96 LEFT (ROAD A) = TOTAL INTERCEPTION

10 · RIGHT HAND SIDE – STATION 14+96 ROAD A

$$L = KQ^{0.42}S^{0.3}\left(\frac{1}{nS_x}\right)^{0.6}$$

$K = 0.6$

$Q = CiA = (0.6)(4.5\,in/hr)(0.1\,Ac) = 0.27\,cfs$

$S = 0.0112$ (SAME AS ABOVE)

$n = 0.013$

$S_x = 0.1667$

$L = 3.6' \Rightarrow$ 4.0' (DI-3B) @ 14+96 LEFT (ROAD A) = TOTAL INTERCEPTION

DJG
P.O. Box 3505
Williamsburg, Virginia 23187
(804) 253-0673
Fax (804) 253-2319

PROJECT Holly Ridge
DATE 8-2-95 COMM NO.
CAL HCPG CKD PAGE # 7 of 8
TITLE Curb & Gutter System Calculations

#6 · LEFT HAND SIDE - STATION 17+00 (SAG) ROAD A

$Q = CiA = (0.6)(4.5\,in/hr)(1.2\,Ac) = 3.24\,cfs$

$Q = C_w(L+1.8w)d^{1.5} \Rightarrow L = Q/C_w d^{1.5} - 1.8w$

$C_w = 2.3$
$w = 0.67'$
$d = 0.25'$ MAX.

L = 10.0' (DI-3C) @ ROAD A 17+00 LEFT = TOTAL INTERCEPTION

#7 · RIGHT HAND SIDE - STATION 17+00 (SAG) ROAD A

$Q = CiA = (0.6)(4.5\,in/hr)(0.2\,Ac) = 0.54\,cfs$

$Q = C_w(L+1.8w)d^{1.5} \Rightarrow L = Q/C_w d^{1.5} - 1.8w$

$C_w = 2.3$
$w = 0.67'$
$d = 0.25'$ MAX.

L = 0.7' ⇒ 6.0' (DI-3C) @ ROAD A 17+00 RIGHT = TOTAL INTERCEPTION

#8 · LEFT HAND SIDE - STATION 16+50 ROAD A

$L = KQ^{0.42}S^{0.3}\left(\frac{1}{n\,S_x}\right)$

$K = 0.6$
$Q = CiA = (0.6)(4.5\,in/hr)(0.7\,Ac) = 1.89\,Ac$
$S = \frac{31.3 - 29.8}{160} = 0.009$
$n = 0.013$
$S_x = 0.1667$

L = 7.7' ⇒ 8' (DI-3B) @ ROAD A 16+50 LEFT = TOTAL INTERCEPTION

DJG
P.O. Box 3505
Williamsburg, Virginia 23187
(804) 253-0673
Fax (804) 253-2319

PROJECT HOLLY RIDGE
DATE 8-2-95 COMM NO.
CAL HCPG CKD PAGE # 8 OF 8
TITLE CURB & GUTTER SYSTEM CALCULATIONS

9 · RIGHT HAND SIDE – STATION 16+50 ROAD A

$$L = KQ^{0.42} S^{0.3} \left(\frac{1}{n S_x}\right)^{0.6}$$

$K = 0.6$

$Q = C \cdot A = (0.6)(4.5\ in/hr)(0.1\ Ac) = 0.27\ cfs$

$S = 0.009$ (SAME AS ABOVE)

$n = 0.013$

$S_x = 0.1667$

$L = 3.4' \Rightarrow$ 4.0' (DI-3B) @ 16+50 ROAD A RIGHT = TOTAL INTERCEPTION

Calculated By: HLPG
Checked By: WDJ
N= 0.013
Storm Frequency: 10-YEAR

Date: AUG.2,1995
Date: AUG.2,1995

DJG, INC

P. O. BOX 3505
WILLIAMSBURG, VIRGINA 23187
STORM DRAINAGE COMPUTATION SHEET

PROJECT NO. 1950620
PROJECT DESC. HOLLY RIDGE SUBDIVISION

SHEET 1 OF 1 SHEETS

LOCATION				RUN-OFF										PIPE-CHANNEL DESIGN						HYDRAULIC GRADE LINE								
				AREA-ACRES					TIME OF FLOW (MIN.)																			
LINE	RUN	FROM	TO	INCREMENTAL	TOTAL	RUN-OFF COEFF.	INCREMENTAL CA	ACCUMULATED CA	TO INLET/UPPER RCH.	WITHIN REACH CONVEYANC	TIME OF CONCENTRATION	INTENSITY	DISCHARGE/CFS	PIPE SIZE	CHANNEL SECTION	SLOPE FT/FT	CAPACITY FULL/C.F.S.	VELOCITY FULL/C.F.S.	DESIGN VELOCITY/F.P.S.	CONVEYANCE LENGTH/FT.	INVERT UPSTREAM	INVERT DOWNSTREAM	FRICTION SLOPE/FT./FT.	VELOCITY FACTOR	V2/2G/FT.	H.G.L. ELEV. UPSTREAM	H.G.L. DOWNSTREAM	RIM ELEV
I	A	3	2	0.20	0.20	0.60	0.12	0.12	3.5	0.13	3.6	4.5	0.54	15		0.0200	9.14	7.44	4.02	35	29.26	28.56	0.00007	0.54	0.251	27.46	27.38	33.18
		2	1	0.70	0.90	0.60	0.42	0.54	17	0.12	17.1	4.5	2.43	15		0.0200	9.14	7.44	6.18	46	28.36	27.44	0.00142	0.83	0.593	27.38	27.15	33.18
		1	4	1.30	2.20	0.60	0.78	1.32	21	0.24	21.2	4.5	5.94	15		0.0200	9.14	7.44	7.89	113	27.19	24.93	0.00848	1.06	0.967	27.15	25.83	32.63
		4	5	1.10	3.30	0.60	0.66	1.98	17	0.10	17.1	4.5	8.91	15		0.0200	9.14	7.44	8.56	49	24.73	23.75	0.01907	1.15	1.138	25.83	24.24	32.01
		7	6	0.20	0.20	0.60	0.12	0.12	4	0.23	4.2	4.5	0.54	15		0.0050	4.57	3.72	2.42	35	25.76	25.59	0.00007	0.65	0.091	24.45	24.24	29.68
		6	8	1.20	1.40	0.60	0.72	0.84	28	0.09	28.1	4.5	3.78	15		0.0050	4.57	3.72	4.17	50	25.39	25.14	0.00343	1.12	0.270	24.24	24.02	29.68
		9	8	0.10	0.10	0.60	0.06	0.06	2	0.52	2.5	4.5	0.27	15		0.0050	4.57	3.72	2.01	50	25.32	25.14	0.00002	0.54	0.063	26.00	25.94	29.81
		8	5	0.70	2.20	0.60	0.42	1.32	19	0.13	19.1	4.5	5.94	18		0.0070	8.79	4.97	5.37	164	24.89	23.75	0.00320	1.08	0.448	25.94	25.34	29.81
		5	10	0.20	5.70	0.60	0.12	3.42	3	0.16	3.2	4.5	15.39	18		0.0500	23.49	13.29	14.22	35	23.25	22.00	0.02147	1.07	3.141	25.34	24.02	31.32
		10	11	0.10	5.80	0.60	0.06	3.48	2	0.08	2.1	4.5	15.66	18		0.0500	23.49	13.29	14.22	44	21.20	19.00	0.02223	1.07	3.141	24.02	21.00	31.32

STORMWATER DRAINAGE AND BMP CALCULATIONS

FOR

HOLLY RIDGE SUBDIVISION

RESUBMITTAL #1

BY

DJG, INC.
1006 RICHMOND ROAD
WILLIAMSBURG, VA 23185

DJG COMMISSION NO. 1950620

DJG
P.O. Box 3505
Williamsburg, Virginia 23187
(804) 253-0673
Fax (804) 253-2319

PROJECT HOLLY RIDGE
DATE 9-7-95 COMM NO. 1950620
CAL HDG CKD PAGE # 1
TITLE RESUBMITTAL #1

OUTLET PROTECTION FOR LINE I DISCHARGE INTO POND

PIPE DIA. = 18" Q_{10} = 12.18 cfs

MINIMUM TAILWATER CONDITION
- APRON LENGTH = 14.0' (E&S, pg III-164)
- APRON WIDTH UPSTREAM: 3 × DIA. = 3.75'
  DOWNSTREAM: DIA. + A. LENGTH = 15.25' MIN.
- RIPRAP: d_{50} = 6"
  depth = 18" min.

EMERGENCY SPILLWAY DESIGN:

$Q_{E.S.} = Q_{25} - Q_p$ = 42 cfs − 35 cfs = 7 cfs

b = 8'
S = 3.7 % (from E&S, pg III-100)
X = 36'
V = 3.0 fps

SWALE DESIGN: CAPACITY NEEDED = Q = C·i·A
= (0.5)(4.5 in/hr)(1.1 AC.) = 2.5 cfs

CHANNEL = V-DITCH @ 4.55%, KENTUCKY BLUE GRASS LINING (RETARD. GRP C)
- PERMISSABLE VELOCITY (V) = 5 fps
- HYDRAULIC RADIUS (R) = $\frac{6.5'}{2\sqrt{(\frac{6.5}{1.5})^2+1}}$ = 0.73
- V × R = 3.65 ⟹ n = 0.043 (E&S pg IV-112)
- SIDESLOPES = 3:1, DEPTH = 1.5', TOP WIDTH = 6.5'

MANNINGS EQUATION ⟹ CHANNEL 10-YR VELOCITY = 2.94 fps
(SEE NEXT PAGE) CHANNEL CAPACITY = 39.63 cfs

CONCLUSION: THE VELOCITY OF THE 10-YR STORM DESIGN DRAINAGE IS 2.94 fps WHICH IS LESS THAN THE MAXIMUM PERMISSABLE VELOCITY FOR KENTUCKY BLUE GRASS LINER (5.0 fps). THEREFORE, CHANNEL DESIGN IS O.K.

HOLLY RIDGE 9-7-95
1950620 HCPG PAGE 2
LOT #4 DRAINAGE SWALE TO POND
RESUBMITTAL #1

— 10-YR DESIGN VELOCITY CHECK:

MANNING'S EQUATION Rec/Trap/Tria

Created Revised
07-Sep-95 07-Sep-95 11:53

Units (ft)	= FEET	Area (sq ft)	= 0.85
Depth (ft)	= <.53> <---	Velocity (ft/s)	= 2.74 < 5.0
Discharge (cfs)	= <2.3>	Froude Number	= 1.01
Manning's n	= <.043> - .05 - 2.65 '/sec .03 - 3.8'/sec	Critical Depth (ft)	= 0.53
Slope(decimal)	= <.04545>	Normal Depth (ft)	= 0.53
Bottom Width(ft)	= <0>	Hydraulic Radius (ft)	= 0.25
		Depth to Centroid(ft)	= 0.15
Side Slope	= <3>	Top Width (ft)	= 3.19

— CHANNEL MAXIMUM CAPACITY CHECK:

MANNING'S EQUATION Rec/Trap/Tria

Created Revised
07-Sep-95 07-Sep-95 11:56

Units (ft)	= FEET	Area (sq ft)	= 6.75
Depth (ft)	= <1.5>	Velocity (ft/s)	= 5.87
Discharge (cfs)	= <39.63> <---	Froude Number	= 1.20
Manning's n	= <.043>	Critical Depth (ft)	= 1.61
Slope(decimal)	= <.04545>	Normal Depth (ft)	= 1.50
Bottom Width(ft)	= <0>	Hydraulic Radius (ft)	= 0.71
		Depth to Centroid(ft)	= 0.50
Side Slope	= <3>	Top Width (ft)	= 9.00

DJG
P.O. Box 3505
Williamsburg, Virginia 23187
(804) 253-0673
Fax (804) 253-2319

PROJECT HOLLY RIDGE
DATE 9-7-95 COMM NO. 1950620
CAL HCDG CKD PAGE # 3
TITLE RESUBMITTAL #1

• OUTLET PROTECTION FOR LOT #4 DRAINAGE SWALE:

$Q_{10\text{-}YR} = 2.5$ cfs depth in channel = 0.53' (from previous page)
Top width = 3.19'

- EQUIVALENT PIPE SIZE CALCULATION:

$$\sqrt{\left(\frac{3.19'}{2} \times 0.53'\right)/\pi} \times \frac{12''}{ft} \times 2 = 12.5'' \text{ DIA. PIPE}$$

12.5" ⇒ **15" PIPE EQUIVALENT**

- ASSUME MIN. TAILWATER CONDITION
  APRON LENGTH = 10.0
  APRON WIDTH UPSTREAM = 3 × DIA. = 3.75'
  DOWNSTREAM = DIA. + A.LENGTH = 11.25'
  RIPRAP = d_{50} = 0.5'
  depth = 18" MIN.

Calculated By: HLPG Date: NOV.17, 1995
Checked By: WDJ Date: NOV.17, 1995

N= 0.013
Storm Frequency: 10-YEAR

DJG, INC

P. O. BOX 3505
WILLIAMSBURG, VIRGINA 23187
STORM DRAINAGE COMPUTATION SHEET

PROJECT NO. 1950620 RESUBMITTAL #2
PROJECT DESC. HOLLY RIDGE SUBDIVISION

SHEET 1 OF 1 SHEETS

LOCATION				RUN-OFF										PIPE-CHANNEL DESIGN						HYDRAULIC GRADE LINE								
				AREA-ACRES					TIME OF FLOW (MIN.)																			
LINE	RUN	FROM	TO	INCREMENTAL	TOTAL	RUN-OFF COEFF.	INCREMENTAL CA	ACCUMULATED CA	TO INLET/UPPER RCH.	WITHIN REACH CONVEYANC	TIME OF CONCENTRATION	INTENSITY	DISCHARGE/CFS	PIPE SIZE	CHANNEL SECTION	SLOPE FT/FT	CAPACITY FULL/C.F.S.	VELOCITY FULL/C.F.S.	DESIGN VELOCITY/F.P.S.	CONVEYANCE LENGTH/FT.	INVERT UPSTREAM	INVERT DOWNSTREAM	FRICTION SLOPE/FT./FT.	VELOCITY FACTOR	V2/2G/FT.	H.G.L. ELEV. UPSTREAM	H.G.L. DOWNSTREAM	RIM ELEV
I	A	3	2	0.20	0.20	0.60	0.12	0.12	3.5	0.13	3.6	3.5	0.42	15		0.0200	9.14	7.44	4.02	35	29.26	28.56	0.000042	0.54	0.251	28.20	28.13	33.18
		2	1	0.70	0.90	0.60	0.42	0.54	17	0.12	17.1	3.5	1.89	15		0.0200	9.14	7.44	6.18	46	28.36	27.44	0.00086	0.83	0.593	28.13	27.92	33.18
		1	4	1.30	2.20	0.60	0.78	1.32	21	0.24	21.2	3.5	4.62	15		0.0200	9.14	7.44	7.89	113	27.19	24.93	0.00513	1.06	0.967	27.92	26.98	32.63
		4	5	1.10	3.30	0.60	0.66	1.98	17	0.10	17.1	3.5	6.93	15		0.0200	9.14	7.44	8.56	49	24.73	23.75	0.01154	1.15	1.138	26.98	25.76	32.01
		7	6	0.30	0.30	0.60	0.18	0.18	4	0.23	4.2	3.5	0.63	15		0.0049	4.50	3.67	2.38	35	25.76	25.59	0.00010	0.65	0.088	26.38	25.76	29.68
		9	6	1.05	1.05	0.60	0.63	0.63	28	0.52	28.5	3.5	2.21	15		0.0060	5.00	4.08	2.20	50	25.89	25.59	0.00117	0.54	0.075	27.18	27.03	29.81
		6	8	0.15	1.50	0.60	0.09	0.90	3	0.09	3.1	3.5	3.15	15		0.0078	5.71	4.65	5.21	50	25.39	25.00	0.00238	1.12	0.421	25.76	25.58	29.68
		8	5	0.70	2.20	0.60	0.42	1.32	19	0.13	19.1	3.5	4.62	18		0.0076	9.17	5.19	5.60	164	24.75	23.50	0.00193	1.08	0.488	27.03	26.62	29.81
		5	10	0.20	5.70	0.60	0.12	3.42	3	0.16	3.2	3.5	11.97	18		0.0500	23.49	13.29	14.22	35	23.25	21.50	0.01299	1.07	3.141	26.62	25.58	31.32
		10	11	0.10	5.80	0.60	0.06	3.48	2	0.08	2.1	3.5	12.18	18		0.0300	18.19	10.30	11.02	44	20.32	19.00	0.01345	1.07	1.884	25.58	23.10	31.32

Calculated By: HLPG
Checked By: WDJ
N= 0.013
Storm Frequency: 10-YEAR

Date: SEPT.7,1995
Date: SEPT.7,1995

DJG, INC

P. O. BOX 3505
WILLIAMSBURG, VIRGINA 23187
STORM DRAINAGE COMPUTATION SHEET

PROJECT NO. 1950620 RESUBMITTAL #1
PROJECT DESC. HOLLY RIDGE SUBDIVISION
SHEET 1 OF 1 SHEETS

LOCATION				RUN-OFF										PIPE-CHANNEL DESIGN						HYDRAULIC GRADE LINE								
				AREA-ACRES					TIME OF FLOW (MIN.)																			
LINE	RUN	FROM	TO	INCREMENTAL	TOTAL	RUN-OFF COEFF.	INCREMENTAL CA	ACCUMULATED CA	TO INLET/UPPER RCH.	WITHIN REACH CONVEYANC	TIME OF CONCENTRATION	INTENSITY	DISCHARGE/CFS	PIPE SIZE	CHANNEL SECTION	SLOPE FT/FT	CAPACITY FULL/C.F.S.	VELOCITY FULL/C.F.S.	DESIGN VELOCITY/F.P.S.	CONVEYANCE LENGTH/FT.	INVERT UPSTREAM	INVERT DOWNSTREAM	FRICTION SLOPE/FT./FT.	VELOCITY FACTOR	V2/2G/FT.	H.G.L. ELEV. UPSTREAM	H.G.L. DOWNSTREAM	RIM ELEV
I	A	3	2	0.20	0.20	0.60	0.12	0.12	3.5	0.13	3.6	3.5	0.42	15		0.0200	9.14	7.44	4.02	35	29.26	28.56	0.000042	0.54	0.251	28.36	28.28	33.18
		2	1	0.70	0.90	0.60	0.42	0.54	17	0.12	17.1	3.5	1.89	15		0.0200	9.14	7.44	6.18	46	28.36	27.44	0.00086	0.83	0.593	28.28	28.08	33.18
		1	4	1.30	2.20	0.60	0.78	1.32	21	0.24	21.2	3.5	4.62	15		0.0200	9.14	7.44	7.89	113	27.19	24.93	0.00513	1.06	0.967	28.08	27.14	32.63
		4	5	1.10	3.30	0.60	0.66	1.98	17	0.10	17.1	3.5	6.93	15		0.0200	9.14	7.44	8.56	49	24.73	23.75	0.01154	1.15	1.138	27.14	25.92	32.01
		7	6	0.30	0.30	0.60	0.18	0.18	4	0.23	4.2	3.5	0.63	15		0.0049	4.50	3.67	2.38	35	25.76	25.59	0.00010	0.65	0.088	26.53	25.92	29.68
		9	6	1.05	1.05	0.60	0.63	0.63	28	0.52	28.5	3.5	2.21	15		0.0060	5.00	4.08	2.20	50	25.89	25.59	0.00117	0.54	0.075	27.33	27.19	29.81
		6	8	0.15	1.50	0.60	0.09	0.90	3	0.09	3.1	3.5	3.15	15		0.0078	5.71	4.65	5.21	50	25.39	25.00	0.00238	1.12	0.421	25.92	25.73	29.68
		8	5	0.70	2.20	0.60	0.42	1.32	19	0.13	19.1	3.5	4.62	18		0.0076	9.17	5.19	5.60	164	24.75	23.50	0.00193	1.08	0.488	27.19	26.77	29.81
		5	10	0.20	5.70	0.60	0.12	3.42	3	0.16	3.2	3.5	11.97	18		0.0500	23.49	13.29	14.22	35	23.25	21.50	0.01299	1.07	3.141	26.77	25.73	31.32
		10	11	0.10	5.80	0.60	0.06	3.48	2	0.08	2.1	3.5	12.18	18		0.0500	23.49	13.29	14.22	44	21.20	19.00	0.01345	1.07	3.141	25.73	23.10	31.32

PC100

DJG
P.O. Box 3505
Williamsburg, Virginia 23187
(804) 253-0673
Fax (804) 253-2319

PROJECT HOLLY RIDGE
DATE 8-1-95 COMM NO.
CAL HLPG CKD PAGE # 2 OF 8
TITLE DETENTION POND DESIGN

• STORAGE ALGORITHM: $Z_1 = 1.0$ $Z_2 = 3.0$
$S_1 = 6650$ $S_2 = 23250$

$$b = \frac{\ln\left(\frac{S_2}{S_1}\right)}{\ln\left(\frac{Z_2}{Z_1}\right)} = 1.14 \Rightarrow K_S = \frac{S_2}{Z_2^b} = 6650 \Rightarrow Z = \left(\frac{7000}{6650}\right)^{1/1.14} \approx 1.0$$

$\therefore$ 20.0 + 1.0 = $\boxed{21.0}$ = NORMAL SURFACE

• STORAGE ABOVE NORMAL SURFACE @ 21.0:

ELEV.	AREA (ft^2)	$\Sigma(A_i+A_j)/2$	VOL. (ft^3)	Σ VOL. (ft^3)
21.0	7200	—	—	—
23.0	9400	8300	16600	16600
25.0	11645	10522	21045	37645

• STORAGE ALGORITHM: $Z_1 = 2.0$ $Z_2 = 4.0$
$S_1 = 16600$ $S_2 = 37645$

$$b = \frac{\ln\left(\frac{S_2}{S_1}\right)}{\ln\left(\frac{Z_2}{Z_1}\right)} = 1.18 \Rightarrow K_S = \frac{S_2}{Z_2^b} = 7320.0 \Rightarrow S = 7320\left(Z^{1.18}\right)$$

• OUTLET STRUCTURE: ORIFICE: 3" $Q = CA\sqrt{2gH_o}$ $C = 0.6$ $A = 0.0491\ ft^2$
RISER: 48" CMP
BARREL: 50' - 18" CMP, C.F. = 1.12 $ELEV_{IN} = 18.0$, $ELEV_{OUT} = 17.0$

• STAGE - STORAGE - DISCHARGE:

	ELEV.	STAGE	H_p	Q_p	H_o	Q_o	ΣQ (ft^3/sec)	STORAGE (ft^3)
	21.0	—	—	—	—	—	—	—
	21.5	0.5	—	—	0.37	0.14	0.14	3228
	22.0	1.0	—	—	0.87	0.22	0.22	7320
	22.5	1.5	—	—	1.37	0.28	0.28	11818
	23.0	2.0	—	—	1.87	0.32	0.32	16600
C.R.	23.5	2.5	—	—	2.37	0.36	0.36	21607
	24.0	3.0	6.0	(R) 13.8	2.87	0.40	14.2	26799
	24.5	3.5	6.5	15.6	3.37	0.43	16.0	32151

DJG
P.O. Box 3505
Williamsburg, Virginia 23187
(804) 253-0673
Fax (804) 253-2319

PROJECT HOLLY RIDGE
DATE 8-1-95 COMM NO.
CAL HLPG CKD PAGE # 1 OF 8
TITLE DETENTION POND DESIGN

I. WETPOND DESIGN #7 ($4.0 \times V_R$):

$V_R = 0.5 \times R_V \times A \times 3630$

$R_V = 0.05 + 0.009 \times I$

I = (1/3 ACRE LOTS FROM E & S pg I-57) ⇒ 30% IMPERVIOUS

A = 7.18 AC (ON-SITE TO POND)
1.92 AC (OFF-SITE TO POND)
9.10 AC

$4.0 \times V_R$ = **21,140 ft³** = VOLUME NEEDED

II. E & S REQUIREMENTS = 67 yd³ WET STORAGE
67 yd³ DRY STORAGE
134 yd³ PER DISTURBED ACRE
DRAINAGE

DISTURBED ACREAGE = 8.2 AC

8.2 AC × 134 yd³/AC × 27 ft³/yd³ = **29,670 ft³** = VOLUME NEEDED

III. POND SIZING & STORM ROUTING:

- BASIN STORAGE TO 5' LEVEL SHELF @ 20.0:

ELEV	AREA (ft²)	Σ(Aᵢ + Aⱼ)/2	VOL. (ft³)	Σ VOL. (ft³)	
14.0	640	–	–	–	
16.0	1600	1120	2240	2240	21,140 ft³ REQ'D
18.0	2900	2250	4500	6740	14,140 ft³ PROVIDED
20.0	4500	3700	7400	14140	7000 ft³ NEEDED

- STORAGE ABOVE 5' LEVEL SHELF @ 20.0:

ELEV	AREA (ft²)	Σ(Aᵢ+Aⱼ)/2	VOL. (ft³)	Σ VOL. (ft³)
20.0	6100	–	–	–
21.0	7200	6650	6650	6650
23.0	9400	8300	16600	23250

DEVELOPMENT MANAGEMENT

101-E MOUNTS BAY ROAD, P.O. BOX 8784, WILLIAMSBURG, VIRGINIA 23187-8784
(757) 253-6671 Fax: (757) 253-6850 E-MAIL: devtman@james-city.va.us

CODE COMPLIANCE
(757) 253-6626
codecomp@james-city.va.us

ENVIRONMENTAL DIVISION
(757) 253-6670
environ@james-city.va.us

PLANNING
(757) 253-6685
planning@james-city.va.us

COUNTY ENGINEER
(757) 253-6678

INTEGRATED PEST MANAGEMENT
(757) 253-2620

June 21, 2000

Mr. William M. Moore
2740 Holly Ridge Lane
Williamsburg, Va. 23185

Re: Holly Ridge Subdivision
Stormwater Management / BMP Facility
Holly Ridge Lane & Lots 4/5

Dear Mr. Moore:

At your request, the Environmental Division is forwarding information relative to our meeting and general inspection performed on Thursday June 1st 2000 for the above referenced Stormwater Management / Best Management Practice (BMP) facility. In addition to specific comments as outlined below, the following additional information is also attached for your review:

- ❒ A Stormwater Management / BMP Inspection Report (Standard County Form).
- ❒ A Typical Maintenance Plan.
- ❒ General Landscaping Guidance (Tips).

Please note the attached maintenance plan was prepared as a courtesy from design and as-built (record) drawing information available in our files for the project. It is provided for information and guidance purposes when no other specifically approved maintenance plans are available for the facility. The plan only addresses normal structural, stormwater runoff control and aesthetic activities related to safe function of the facility as intended. Landscaping, cosmetic or ornamental features associated with the facility are usually left to the discretion of the owner, or its designated representative, unless these features deter from the structural integrity or performance of water quality/quantity control as approved.

Specific Comments about the Facility

Based on field observations, the main concern from our perspective was the presence of tree vegetation on and along the toe of the engineered fill embankment. This embankment is west of the water pool where the riser pipe is located. Willows were present along the upstream toe and heavy tree and ground vegetation covered most of the downstream embankment and lower portion of the emergency spillway. These trees should be removed. We recommend that the trees be cut to ground level and be maintained in that fashion as to not disturb root systems that may already be extensive. Efforts should be made to establish a good low-maintenance grass covering to replace the current tree covering. The single Wax Myrtle on the pond embankment may be left in place. With proper maintenance and monitoring, it's

growth (root system) should not progress to a point where it jeopardizes the structural integrity of the embankment. Vegetation and tree growth in other areas surrounding the normal pool may be removed or left in place at the preference of the owner, depending on whether a dressed or natural look is preferred. Protective coating or paint should be applied to the exposed riser pipe and trash cap, in areas where the original pipe coating has worn or flaked off. This will extend the life of the corrugated metal, so deterioration does not lead to premature replacement. Bare soil or eroded areas around the facility should be overseeded and mulched to allow vegetation to establish and reduce sedimentation to the pond. Trees and debris should be removed from the outlet of the primary storm drain which flows into the basin near Holly Ridge Lane.

Although cleaning of sediment from the bottom of the facility does not appear immediately necessary, it may be necessary sometime in the near future. The sediment may be a contributory factor in the presence of surface algae and thick vegetation in bottom of the pond. Leaves falling into the water from perimeter trees have introduced an moderate amount of organic material. Efforts should be continued to eliminate or reduce fertilizers and grass clippings from lots, and more importantly, common areas mowed adjacent to the pond. These materials easily find their way into the storm drain system along Holly Ridge Road which leads directly to the pond. These materials add nutrients to the stormwater, which in turn may stimulate excessive growth of vegetation in the sediments and aggravate the algae bloom condition which has persisted at the pond.

Hopefully, this material is helpful to your group to understand maintenance associated with the wet pond. Please review the information and contact us at 757-253-6639 or 757-253-6673, if you have any further questions or comments.

Sincerely,

Scott J. Thomas, P.E.
Civil Engineer
Environmental Division

Enclosures
G:/SWMProg/Edu/Subdiv/Hollyridge.lett

HOLLY RIDGE SUBDIVISION

(Note: This is a typical Maintenance Plan for your Detention or Retention Pond facility. For general use by the HOA, or other designated parties which are responsible for operation, maintenance and inspection of the facility when no other specifically approved plans are available. This is provided as a courtesy by the Environmental Division of James City County for informational purposes only. This plan addresses normal structural and stormwater runoff control aspects of the facility. It does not address landscaping, cosmetic, or ornamental features associated with the facility nor does it replace any specific recommendations offered by a registered professional.)

Maintenance Plan (Detention or Retention Ponds)

A maintenance program is required to ensure the Stormwater Management (SWM) / Best Management Practice (BMP) pond facility functions as designed and to provide for reasonable aesthetic conditions. Proper maintenance is encouraged to prevent the introduction of debris and sediment into pretreatment areas (if applicable), the facility itself, its principal inflow and outflow control structures and downstream waterways. Following facility installation, acceptance and establishment of vegetation in disturbed areas, inspections for sediment buildups should be performed at least quarterly. It is anticipated that under normal conditions, sediment removal will be required once every 5 to 10 years. If other construction or related land-disturbing activities are performed upland of the primary structure, adequate protection measures should be implemented and inspection frequencies increased to at least once weekly.

The designated party will inspect the SWM/BMP structure after each significant rainfall event or the following working day if a weekend or holiday occurs. A significant rainfall for this structure is defined as one (1) inch or more of gauged rainfall within a 24 hour period. Once per year (more or less) a representative of the County may jointly inspect the structure. Appropriate action will be taken to ensure appropriate maintenance. Where structures are to be maintained jointly, allocation of maintenance costs will be in accordance with terms established in maintenance agreements. Keys to locked access points or structures shall be made available to the County upon request.

Facility Description: The SWM/BMP facility is located west of Holly Ridge Lane between Lots 4 and 5. The facility serves a drainage area of approximately 9.10 acres and is an old County wet pond Type 7, 9 point BMP designation. A wet-type retention pond has a permanent impoundment which enhances water quality and is normally "wet" even during non-rainfall periods. There is a 5 foot wide aquatic and safety shelf incorporated into the pond bottom grading at El. 20.0 or about 1 foot below the maximum normal pool elevation at El. 21.0. The maximum normal wet pool for the facility is about 7 feet deep. The facility contains a 48 inch vertical asphalt coated corrugated metal pipe, a corrugated metal anti-vortex/trash rack cap, an 18 inch asphalt coated corrugated metal outlet pipe barrel and an 8 foot wide bottom, grass-lined trapezoidal shaped emergency spillway. There are 2 openings in the riser pipe to provide control for normal and larger storm events, the first one being a small 3 inch diameter orifice with a protection elbow at El. 21.0 and a large diameter opening associated with the crest of the 48 inch riser at El. 23.5. The riser crest is about 9.5 feet above the bottom of the pond. During the 100-year storm, the maximum water level should rise to about ½ foot above the top of the riser to El. 24.0, which is at least 1 foot below the top of dam at El. 25.0. For normal and larger storm events, the riser was designed to handle all runoff to the pond. The emergency spillway, which is located 40 feet west of the riser structure, is provided as an auxiliary overflow device, should the riser become partially blocked. Although the emergency spillway can handle short-term duration flow, periodic or long duration discharge through the emergency spillway could be an indicator of potential problems with the principal riser or outlet pipes. If functioning properly, normal storm events should reach an elevation below the top of the riser.

Inspection and Maintenance of the Facility should consist of the following Additional Measures:

1. Inspect for sediment buildup by visual observation and a physical determination of sediment depth within pond's storage area. If sediment reaches a depth of 1' - 10" above the bottom of pond (corresponding to a Cleanout Elevation of 15.88) , removal is required. At the same time, or at least once per year, clean storm drain and channel inflow locations, the riser bottom and outlet pipes of accumulated sediments. Dispose of sediments removed from the facility at an acceptable disposal area. (Note: Cleanout Elevation at 10 percent Water Quality Volume.)

2. Perform maintenance mowing of pond grasses at least twice each year. Grasses such as tall fescue should be mowed in early summer after emergence of the heads on cool season grasses and in late fall to prevent seeds of annual weeds from maturing. Mowing of legumes can be less frequent. Trees, shrubs and woody vegetation are not be permitted to grow on any part of pond embankment that was constructed using engineered (compacted) fills.

3. Perform soil sampling on stabilized pond soil areas at least once every 4 years. Soil sampling and testing should be performed a qualified independent soil testing laboratory such as VPI&SU. Apply additional lime and fertilizer in accordance with test recommendations.

4. In stabilized pond areas, if vegetation covers less than 40 % of soil surfaces, lime, fertilize and seed in accordance with recommendations for new seedlings. If vegetation covers more than 40 % but less than 70 % of soil surfaces, lime, fertilize and over seed in accordance with current seeding recommendations of the Virginia Erosion and Sediment Control Handbook (VESCH).

5. Perform quarterly inspections of the riser section and crest spillway for the observance of collected trash and debris. Immediately remove any trash or debris that prevents the movement of water. Remove any trash and litter downstream and at storm drain or channel inflow locations to maintain the integrity of the structure and provide for an attractive appearance.

6. Perform yearly structural inspections of the facility for damage. Structural inspection shall be performed on the corrugated metal riser, anti-vortex and trash rack cap, orifices/weirs, outlet barrel and pond embankment. Exposed metal surfaces shall be painted to minimize rust damage or replaced if rust damage is irreversible. If damage is evident, further investigation by a registered professional engineer may be required to assess the integrity of the structure.

7. Perform quarterly inspections of the graded side slopes of the facility for signs of animal/rodent borrows or slope erosion. Immediately perform necessary repairs, refilling or reseeding.

8. Perform yearly observations of perimeter areas surrounding the facility to ensure changes in land use, topography or access have not occurred and do not affect the operation, maintenance, access or safety features provided for the facility. Appropriate action is required to ensure adequacy and to provide a clear, safe passage for maintenance vehicles to the engineered embankment and principal flow control structures.

9. Record Keeping. Keep reasonable, accurate written records of inspections and maintenance activities performed for the BMP structure at all times. Records shall document routine maintenance and/or repairs performed. Copies shall be provided to the County upon request.

10. The facility shall not accept additional drainage or be modified in any way without prior consent or approval by the Environmental Division of James City County.

General Landscaping Guidance for All Stormwater Management BMP's

- ❒ *Trees, shrubs and/or any type of woody vegetation are not allowed on the embankment.*
- ❒ *Keep trees and shrubs at least 15 feet away from the toe of constructed fill slopes.*
- ❒ *Keep trees or shrubs having long taproot systems away from earthen dams or subsurface drains.*
- ❒ *Keep trees and shrubs at least 25 feet away from perforated pipes.*
- ❒ *Keep trees and shrubs at least 25 feet away from principal flow control structures.*
- ❒ *Keep vegetation at least 15 feet from low flow orifice openings.*
- ❒ *Clean trash and debris as necessary from the facility and principal control structures. Only trained or authorized personnel should enter confined spaces or structural components of the facility.*
- ❒ *Keep herbaceous (not woody) embankment plantings limited to ten (10) inches in height.*
- ❒ *Maintain erosion control mats, blankets and fabrics in channels to reduce erosion potential.*
- ❒ *Sod channels that are not stabilized with erosion control mats.*
- ❒ *Keep emergency spillways stabilized with plant material that can withstand strong flows. Root material should be fibrous and substantial but lacking a taproot.*
- ❒ *Seed and mulch bare, exposed or formed erosion gullies. Divert surface runoff from any reseeded and mulched areas until stabilized.*
- ❒ *Check water tolerances of existing native plant materials prior to inundation of pond areas.*
- ❒ *Stabilize aquatic and safety benches with emergent wetland plant species and wet-seed mixes.*
- ❒ *Keep access to embankments or flow control structures free of trees or shrubs. Ensure areas that are planted adjacent to access routes can withstand compaction, damage or vibration that may occur due to passing vehicles or heavy equipment.*
- ❒ *To reduce thermal warming effects, shade inflow and outflow channels as well as southern exposures to the greatest extent possible.*
- ❒ *Avoid plantings that require routine or intensive chemical applications such as turf, etc.*
- ❒ *Use salt tolerant plants if excessive amounts of deicing salt are anticipated in inflow runoff.*
- ❒ *Soil test perimeter areas periodically to determine if soil amendments are necessary. Contact the local Virginia Cooperative Extension for assistance.*
- ❒ *Use native plant species which adapt to local soil and weather conditions over exotic or foreign species.*
- ❒ *Decrease or minimize areas where turf is used. Use low maintenance ground cover to absorb runoff where possible.*
- ❒ *Plant stream and normal pool buffers with trees, shrubs, ornamental grasses and herbaceous material where possible to stabilize banks, provide shade and provide for water quality enhancement.*
- ❒ *Use selective or strategic plantings to minimize access to deeper pools or steeper slopes.*
- ❒ *If warranted, provide educational signs around the perimeter of the facility to indicate that it is a Stormwater Management Area or to designate planting, maintenance or mowing zones.*
- ❒ *Avoid the overuse of any one type of plant material and material with weeds or invasive components.*
- ❒ *Preserve existing, native vegetation to the greatest extent possible unless it deters from structural aspects of the facility.*
- ❒ *Aesthetics and cosmetic characteristics should be a prime consideration. Strive to maintain a natural, scenic character for the BMP that blends well with the community theme, physical location and surrounding land uses and provides for screening, but yet maintains the structural aspects of the facility such as riser pipes, outlet barrels, spillways, trash racks, inlets, inflow channels, etc. Be certain original or enhanced landscaping does not encroach upon public or private roadways, sidewalks, trails or emergency vehicle access routes.*
- ❒ *Refer to the approved design or construction plan for the BMP. Some approved plans provide site specific information related to operation, inspection and maintenance. Please note, however, this is a current requirement of the Environmental Division for stormwater management plans and this information may not necessarily be found on all plans, especially for older facilities. Contact the Environmental Division at **757-253-6670** for additional information.*

James City County Environmental Division
Stormwater Management / BMP Inspection Report
Detention and Retention Pond Facilities

Name of Facility: HOLLY RIDGE SUBDIVISION BMP No.: 1 Date: 06/01/00

Location: SR31 JAMESTOWN ROAD; SWM FACILITY WEST OF HOLLY RIDGE LANE

Name of Owner: HOLLYRIDGE SUBDIVISION HOA

Inspector: DARRYL E. COOK / SCOTT J. THOMAS (JCC ENVIRONMENTAL DIVISION)

Type of Facility: WET RETENTION POND (DESIGN TYPE 7, 9 POINT FACILITY)

Weather Conditions: SUNNY, HOT MID 80'S

If an inspection item is not applicable, mark NA, otherwise mark the appropriate column.

O.K. - The item checked is in adequate condition and the maintenance program is currently satisfactory.
Routine - The item checked requires attention, but does not present an immediate threat to the function of the BMP.
Urgent - The item checked requires immediate attention to keep the BMP operational and prevent damage to the facility.

Provide an explanation and details in the comment column, if routine or urgent are marked.

Facility Item	O.K.	Routine	Urgent	Comments
Embankments and Side Slopes:				
Grass Height	X			
Vegetation Condition		X		WILLOWS BASE OF U/S EMBANK; HEAVY DECIDUOUS D/S EMBANKMENT.
Erosion		X		PERIMETER BARE SPOTS & EROSION.
Weed Growth	X			ALGAE NORMAL POOL; SLIGHT TO MODERATE.
Trash and Debris	X			
Lining	X			
Safety Fencing	N/A			
Constructed Wetlands: N/A				
Vegetation Condition				
Trash and Debris				
Floatables				
Erosion				
Sediment				
Dead Plant Removal				
Aesthetics				
Other				

Facility Item	O.K.	Routine	Urgent	Comments
☒ Permanent Pools (Retention Basins) or ☐ Shallow Marsh (Detention Basins):				
Shoreline Erosion	X			
Algae		X		SLIGHT-TO-MODERATE COLOR APPEARED TO BE DUCKWEED, YELLOW
Trash and Debris	X			
Sediment		X		SLIGHT-TO-MODERATE SEDIMENT DEPTHS OBSERVED.
Aesthetics	X			
Other	X			
Inlet Structure # 1 (Describe Location): STORM DRAIN PIPE ALONG HOLLY RIDGE LANE				
Condition of Structure	X			
Erosion	X			
Trash and Debris	X			CHECK INLET ON ROAD FOR DEBRIS.
Sediment		X		MINOR CLEANUP & REMOVAL REQUIRED.
Aesthetics		X		TREE + VEG IN VICINITY.
Other	X			
Inlet Structure # 2 (Describe Location): OPEN CHANNEL INFLOW LOT 4.				
Condition of Structure	X			
Erosion	X			
Trash and Debris	X			
Sediment	X			
Aesthetics		X		TREES + VEG. IN VICINITY.
Other				
Inlet Structure # 3 (Describe Location): N/A				
Condition of Structure				
Erosion				
Trash and Debris				
Sediment				
Aesthetics				
Other				
Outlet - Principal Flow Control Structure (Describe Location):				
Condition of Structure	X			
Erosion	X			
Trash and Debris	X			
Sediment	X			
Aesthetics	X			
Other		X		EARLY SIGNS OF PIPE COATING WEAR.

Facility Item	O.K.	Routine	Urgent	Comments
Emergency Spillway (Overflow):				
Vegetation		X		MINOR CLEANING NEAR POND. HEAVY TREES & VEG OUTLET SIDE.
Lining	X			
Erosion	X			
Trash and Debris	X			
Dam Condition	X			
Other	X			
Nusiance Type Conditions:				
Mosquito Breeding	X			
Animal Burrows	X			
Graffiti	X			
Other	X			
Perimeter Conditions:				
Grass Height	X			
Vegetation Condition	X			
Trash and Debris	X			
Aesthetics	X			
Other	X			

Remarks:

- SINGLE WAX MURTLE ON EMBANKMENT NEEDS REMOVED OR NOT ALLOWED TO GROW ANY MORE. IF TO STAY, GROWTH MUST BE MONITORED AND MAINTAINED.
- WILLOWS AT UPSTREAM FILL BASE NEED REMOVED.
- TREE REMOVAL REQUIRED DOWNSTREAM TOE OF EMBANK.
- SEDIMENT REMOVAL NOT REQUIRED YET, BUT IMMINENT. (MAY BE CONTRIBUTARY CAUSE OF ALGAE BLOOMS ON SURFACE.)
- MONITOR PIPE COATING WEAR ON RISER. RECOATING WILL HELP EXTEND SERVICE LIFE.

Signature: Scott A Thomas P.E. Date: 06-15-00

Title: Civil Engineer, James City County Environmental Division

InspRep.wpd

WATERSHED	PC	MAINTENANCE PLAN	No	CTRL STRUC DESC	CMP Riser
BMP ID NO	100	SITE AREA acre		CTRL STRUC SIZE inches	
PLAN NO		LAND USE	SF Residential	OTLT BARRL DESC	CMP
TAX PARCEL		old BMP TYP	Wet Pond	OTLT BARRL SIZE inch	
PIN NO	4732300003	JCC BMP CODE			
CONSTRUCTION DATE		POINT VALUE		EMERG SPILLWAY	Yes
PROJECT NAME	HollyRidge Subdivision Wet Pond			DESIGN HW ELEV	
FACILITY LOCATION	2708 Holly Ridge Lane			PERM POOL ELEV	
CITY-STATE	Williamburg, Va. 23185	SVC DRAIN AREA acres		2-YR OUTFLOW cfs	
CURRENT OWNER	Desimone Ernest S. & Anna (Trustee)			10-YR OUTFLOW cfs	
OWNER ADDRESS				REC DRAWING	No
OWNER ADDRESS 2		SERVICE AREA DESCRI	SF Lots & Roadways		
CITY-STATE-ZIP CODE		IMPERV AREA acres		CONSTR CERTI	No
OWNER PHONE		RECV STREAM			
MAINT AGREEMENT	Yes	EXT DET-WQ-CTRL	No	LAST INSP DATE	6/1/2000
EMERG ACTION PLAN	No	WTR QUAL VOL acre-ft	0	INTERNAL RATING	3
		CHAN PROT CTRL	No	MISC/COMMENTS	
		CHAN PROT VOL acre-ft	0	See Letter to HOA rep dated June 21 2000.	
		SW/FLOOD CONTROL	No		
		GEOTECH REPORT	No		

Get Last BMP No

Return to Menu

PC 100 HollyRidge Wet Pond
GPIN 4732300003
2708 HOLLY RIDGE LN.
Ernest S. + Anna
Desimone Trustee
2708

From this point forward the file is not certified. The list below details the documents that have been added to the file, the person that added the documents and the data they were added.

Name	Content	Date
Jo Anna Ripley	Maintenance Agreement	05/08/2013
Jo Anna Ripley	Deed Book 760 Pages 112-115	05/08/2013
Jo Anna Ripley	Document #980020463	05/08/2013
Jo Anna Ripley	Deed Book 795 Pages 203 -206	05/08/2013
Jo Anna Ripley	Declaration of Covenants Deed Book 799 Page 186 - 206	05/08/2013
Jo Anna Ripley	Document #070010114	05/08/2013

Printed On 04/30/2013 By JCC STORM WATER

Holly Ridge 014962

DECLARATION OF COVENANTS

INSPECTION/MAINTENANCE OF RUNOFF CONTROL FACILITY

THIS DECLARATION, made this 23RD day of October, 1995, between ASSOCIATED DEVELOPERS,INC., a Virginia corporation, and all successors in interest, hereinafter referred to as the "COVENANTOR", owners of the property described on Exhibit A attached hereto and made a part hereof, and JAMES CITY COUNTY, VIRGINIA, hereinafter referred to as the "COUNTY".

WITNESSETH:

We, the COVENANTOR, with full authority to execute deeds, mortgages, other covenants and all rights, titles and interests in the property described above, do hereby covenant with the County as follows:

1. The COVENANTOR shall provide maintenance for the runoff control facility, hereinafter referred to as the "FACILITY", located on and serving the above described property to ensure that the FACILITY is and remains in proper working condition in accordance with approved design standards, and with the law and applicable executive regulations.

2. If necessary, the COVENANTOR shall levy regular or special assessments against all present or subsequent owners of property served by the FACILITY to ensure that the FACILITY is properly maintained.

3. The COVENANTOR shall provide and maintain perpetual access from public right-of-ways to the FACILITY for the COUNTY, its agent and its contractor.

4. The COVENANTOR shall grant the COUNTY, its agents and its contractor, a right of entry to the FACILITY for the purpose of inspecting, operating, installing, constructing, reconstructing, maintaining or repairing the FACILITY.

5. If, after reasonable notice by the COUNTY, the COVENANTOR shall fail to maintain the FACILITY in accordance with the approved design standards and with the law and applicable executive regulations, the COUNTY may perform all necessary repair or maintenance work, and the COUNTY may assess the COVENANTOR and/or all property served by the FACILITY for the cost of the work and any applicable penalties.

6. The COVENANTOR shall indemnify and save the COUNTY harmless from any and all claims for damages to persons or property arising from the installation, construction, maintenance, repair, operation or use of the FACILITY.

7. The COVENANTOR shall promptly notify the COUNTY when the COVENANTOR legally transfers any of the COVENANTOR'S responsibilities for the FACILITY. The COVENANTOR shall supply the COUNTY with a copy of any document of

1 →

DBS { 794/888 → Candig + Marcus to Associated Developers Inc. AKA Holly Ridge
& 760/112-115 → 760/116-129 is the DOT (credit to build subdivision) (Courthouse should correct records to reflect this)
PB 64/46-47

Printed On 04/30/2013 By JCC STORM WATER

transfer, executed by both parties. Upon transfer of the land containing the FACILITY to a duly organized homeowner's association, the homeowners association shall assume all of the obligations of the COVENANTOR hereunder and COVENANTOR shall thereupon be released from all obligations and duties hereunder.

8. The covenants contained herein shall run with the land and shall bind the COVENANTOR and the COVENANTORS heirs, executors, administrators, successors and assignees, and shall bind all present and subsequent owners of property served by the FACILITY.

9. This DECLARATION shall be recorded in the County Land Records.

IN WITNESS WHEREOF, the COVENANTOR has executed this DECLARATION OF COVENANTS as of this 23RD day of October, 1995.

COVENANTOR:

ASSOCIATED DEVELOPERS, INC.

By _____
President

ATTEST:
SEAL

_____
Secretary

COMMONWEALTH OF VIRGINIA
CITY OF NEWPORT NEWS, to-wit:

I, the undersigned Notary Public, in and for the jurisdiction aforesaid, do certify that Henry H. Stephens, President, Associated Developers, Inc., whose name is signed as such to the foregoing writing bearing date 23RD day of October, 1995, has this day sworn the same before me in my jurisdiction aforesaid.

GIVEN under my hand this 23RD day of October, 1995.

My commission expires: 3/31/99

_____
Notary Public

Approved as to form:

_____
Deputy County Attorney

2.3

Printed On 04/30/2013 By JCC STORM WATER

EXHIBIT A

All those certain lots, pieces or parcels of land situate, lying and being in the County of James City, Virginia, shown and designated as PARCEL I, 77.537 SQ FT, 1.78 ACRES and PARCEL II, 362,983 SQ FT, 8.33 ACRES, as shown on that certain plat entitled, "A BOUNDARY SURVEY OF PARCEL I & PARCEL II STANDING IN THE NAME OF: EMILY F. CANDIG & BEATRICE F. MARCUS, JAMESTOWN DISTRICT, JAMES CITY COUNTY, VIRGINIA", made by DJG, Engineers, Architects, Surveyors, dated october 13, 1995, a copy of which plat is recorded in the Clerk's Office of the Circuit Court for the County of James City, Virginia in Plat Book 63, page 1, to which reference is here made.

VIRGINIA: City of Williamsburg and County of
Ja[illegible] Wit:
In the Clerk's C[illegible] of the
City of Williams[illegible] City the
3 day of [illegible] 95. This Clerk
was pres[illegible] annexed and
admitted to rec[illegible] 8:54 o'clock
Teste: [illegible] Clerk
by [illegible]
Deputy Clerk

Printed On 04/30/2013 By JCC STORM WATER

38833.001 (009)

9215.002.7

014381

THIS DEED, made this 8th day of September, 1995, by and between EMILY F. CANDIG, Widow, and BEATRICE F. MARCUS and HAROLD MARCUS, her husband, parties of the first part, hereinafter called Grantors; and ASSOCIATED DEVELOPERS, INC., a Virginia corporation, party of the second part, hereinafter called Grantee., whose address is P.O. Drawer 18, Newport News, Virginia 23605

Holly Road

WITNESSETH:

That for and in consideration of the sum of TEN DOLLARS ($10.00), and other valuable consideration, all of which is cash in hand paid, the receipt of which is hereby acknowledged, the said parties of the first part do grant and convey with GENERAL WARRANTY and ENGLISH COVENANTS OF TITLE unto the said ASSOCIATED DEVELOPERS, INC., the following described real estate, to-wit:

PARCEL I

All that certain lot, piece, or parcel of land situated in Jamestown District, James City County, Virginia, on the southerly side of a road leading from Ambler's and Main Farm to Five Forks and to Powell's Mill Road, the aforesaid road now being known as the new section of State Route No. 31 to Jamestown: Said property hereby conveyed is more fully shown and set forth on a certain blueprint plat made by W. D. Thomas, Certified Land Surveyor, in June, 1955; said plat being entitled "T. T. NIXON ESTATE - LOT SURVEY, PLAT SHOWING LOT OF LAND BELONGING TO T. T. NIXON ESTATE LOCATED ON ROAD LEADING FROM JAMESTOWN ROAD TO 4-H CAMP, JAMES CITY COUNTY, VIRGINIA, SURVEYED JUNE, 1955," a blueprint copy of said plat being recorded in James City County Deed Book No. 55, at page 16; said property being bound and described on said plat as commencing at an iron pipe on the southerly side of a road leading from Ambler's and the Main Farm to Five Forks and to Powell's Mill Road, thence S. 7° 41' W. along the property hereby conveyed and remaining lands of the aforesaid Nixon Estate, a distance of 480.2 feet to

Printed On 04/30/2013 By JCC STORM WATER

an iron pipe; thence N. 57° 26' W. along the line of the property hereby conveyed and the remaining lands of the aforesaid Nixon Estate the distance of 200 feet to an iron pipe; thence N. 7° 41' E. along the line of the property hereby conveyed and the lands of Boyd I. Smith a distance of 480.2 feet to and iron pipe of the aforesaid road; thence S. 57° 26' E. along the line of the property hereby conveyed and the aforesaid road a distance of 200 feet to the point of beginning.

And being the same property as that conveyed to 1607, Incorporated, a Virginia Corporation, from Bessie E. White, divorced, by deed dated and recorded January 28, 1957, in the Clerk's Office of the Circuit Court of the City of Williamsburg and the County of James City, Virginia, in Deed Book 60, page 232.

PARCEL II

All that certain piece or parcel of land, situate in Jamestown District, James City County, Virginia, as more fully, shown, set forth, and designated on a certain blueprint plat, which was recorded in the Clerk's Office of the Circuit Court of the City of Williamsburg and the County of James City, Virginia, in Deed Book 60, page 247. Said plat is entitled, "Plat Showing Parcel of Land Belonging to Boyd I. Smith and Gladys R. Smith to be Conveyed to 1607, Inc., Situated on State Route #31 in James City County, Virginia," surveyed to December 1956, by W. D. Thomas, C.L.S. The property hereby conveyed is bounded and described as follows on said plat: commencing at a concrete monument on the right of way of Virginia State Route #31 on the southerly side thereof; thence along said right of way and the property hereby conveyed S. 58° 58' E. a distance of 92.1 feet to an iron pipe, being the NE corner of the property hereby conveyed and also a point where the property hereby conveyed, State Route #31 and the lands of Bessie White converge; thence S. 7° 41' W. along the line of the property hereby conveyed, the lands of Bessie White and a portion of the T. T. Nixon Estate a distance of 1047.43 feet to an iron pipe, being the SE corner of the property hereby conveyed; thence N. 58° 00' W. along the line of the property hereby conveyed and a portion of the T. T. Nixon Estate a distance of 400 feet to an iron pipe; thence N. 7° 41' E. along the line of the property hereby conveyed and a portion of the T. T. Nixon Estate a distance of 1009.68 feet past an iron pipe to the right of way line of Virginia State Route #31; thence along Virginia State Route #31 on a curve with a radius of 1377.39 feet, a distance of 294.89 feet to a concrete monument, the PC of the curve, also the point of beginning. The property hereby conveyed is bounded on the N. by said Virginia State Route #31; on the S. by a portion of the T. T. Nixon Estate; on the E. by the lands of Bessie

Printed On 04/30/2013 By JCC STORM WATER

White; and also by the T. T. Nixon Estate; and on the W. by a portion of the T. T. Nixon Estate.

And being a portion of a tract of land containing 140.62 acres as shown by survey and play recorded in James City Plat Book 2, page 19, and is a portion of the same property of which T. T. Nixon died seized and possessed, intestate; the said tract having been conveyed to him and J. N. Richardson by deed from Henry O. Wright and wife, dated April 15, 1929, and recorded in James City County Deed Book 24, page 531; the undivided one-half interest of the said Richardson having been conveyed to the said T. T. Nixon by deed dated June 5, 1930, and recorded in James City County Deed Book 25, page 514.

And being the same property as that conveyed to 1607, Incorporated, a Virginia corporation, by deed from Boyd I. Smith and Gladys R. Smith, husband and wife, dated January 28, 1957, and recorded January 29, 1957, in the Clerk's Office of the Circuit Court of the City of Williamsburg and the County of James City, Virginia, in Deed Book 60, page 245.

The two parcels herein conveyed being the same property as that conveyed by deed of 1607, INCORPORATED, dated March 10, 1995, to Emily F. Candig and Beatrice F. Marcus, as tenants in common, and recorded March 30, 1995, in James City County, Virginia. Deed Book 732, page 299.

WITNESS the following signatures and seals:

Emily Candig (SEAL)
Emily F. Candig

Beatrice F. Marcus (SEAL)
Beatrice F. Marcus

Harold Marcus (SEAL)
Harold Marcus

STATE OF NEW YORK

Printed On 04/30/2013 By JCC STORM WATER

CITY/COUNTY OF New York, to-wit:

The foregoing instrument was acknowledged before me this 22nd day of September, 1995, by Emily F. Candig.

Notary Public

My Commission expires: 3/23/96.

STATE OF NEW YORK

CITY/COUNTY OF KINGS, to-wit:

The foregoing instrument was acknowledged before me this 28TH day of September, 1995, by Beatrice F. Marcus and Harold Marcus.

Notary Public

THOMAS J. GIGLIO
Notary Public, State of New York
No. 24-495-8243
Qualified in Kings County
Certificate Expires Oct. 30, 1995

My Commission expires:

THOMAS J. GIGLIO NOTARY PUBLIC STATE OF NEW YORK

PLAT RECORDED IN

P.B. NO. 63 PAGE 1

State of Virginia County of James City, to Wit:
The foregoing was presented in the Office of the Circuit Court for the City of Williamsburg and County of James City the 24 day of OCT 1995.
The foregoing was presented with the certificate annexed and admitted to record at 8:55 o'clock. The taxes imposed by Sect. 58-54 (a) and (b) of the code, have been paid.

STATE TAX	LOCAL TAX	ADDITIONAL TAX
$ 322.50	$ 107.50	$ 215.00

Teste Helene S. Ward, Clerk
By: Deputy Clerk

4-4

Printed On 04/30/2013 By JCC STORM WATER

980 020463

OUR FILE NO. 38833.001 (009)

THIS DEED OF GIFT IS EXEMPT FROM RECORDATION TAXATION PURSUANT TO SECTION 58.1-811(D), CODE OF VIRGINIA, 1950, AS AMENDED.

This Deed, OF GIFT made October 22, 1998 between

ASSOCIATED DEVELOPERS, INC., a Virginia corporation, GRANTOR

Holly Ridge

party of the first part, and

HOLLY RIDGE HOMES ASSOCIATION, a Virginia corporation, GRANTEE, whose address is Drawer 18, Parkview Station, Newport News, Virginia 23605

party of the second part

Witnesseth: That for and in consideration of the sum of Ten and 00/100 Dollars ($10.00), cash in hand paid, and other good and valuable consideration, the receipt of which is hereby acknowledged, the said party of the first part does grant and convey, with GENERAL WARRANTY and with ENGLISH COVENANTS OF TITLE unto the said party of the second part the following described property, to-wit:

All those certain lots, pieces, parcels and areas containing 2.06 acres, and shown and designated as "Common Open Space" on that certain plat entitled, "SUBDIVISION PLAT, HOLLY RIDGE SUBDIVISION, OWNER/DEVELOPER: ASSOCIATED DEVELOPERS INCORPORATED, JAMESTOWN DISTRICT, JAMES CITY COUNTY, VIRGINIA", dated October 9, 1995, made by DJG, and duly recorded in the Clerk's Office of the Circuit Court for the County of James City, Virginia in Plat Book 64, pages 46 and 47, including all areas designated as "Natural Open Space/Conservation Area", "50' Greenbelt Buffer/Conservation Area", "Conservation Easement" and "Landscaped Median Area".

Together with all and singular the buildings and improvements thereon, rights and privileges, tenements, hereditaments, easements and appurtenances unto the said land belonging or in anywise appertaining.

Subject, however, to any and all easements, restrictions and provisions of record affecting the same property.

TO HAVE AND TO HOLD unto the said party of the second part, its successors and assigns, in fee simple and forever.

OCT 26 98 0151

JONES, BLECHMAN, WOLTZ & KELLY
ATTORNEYS AND COUNSELORS AT LAW
NEWPORT NEWS, VIRGINIA 23607

Printed On 04/30/2013 By JCC STORM WATER

Whenever used herein, the singular shall include the plural, the plural the singular, and the use of any gender shall include all other genders.

WITNESS the following signatures and seals:

ASSOCIATED DEVELOPERS, INC.

By _____ (Seal)
President

_____ (Seal)

_____ (Seal)

_____ (Seal)

STATE OF VIRGINIA,

CITY OF NEWPORT NEWS to-wit:

I, Jennifer R. Adams a Notary Public in and for the City and State aforesaid, do certify that Henry H. Stephens, President, Associated Developers, Inc.

whose names are signed to the foregoing deed dated October 22, 1998 have acknowledged the same before me in my City and State aforesaid.

Given under my hand this 22nd day of October, 1998

My commission expires 3/31/02

Jennifer R Adams
Notary Public

VIRGINIA: City of Williamsburg and County of James City, to Wit:
In the Clerk's Office of the Circuit Court of the City of Williamsburg and County of James City, the 26 day of Oct, 1998. This Deed Gift was presented with certificate annexed and admitted to record at 12:12 o'clock
Teste: Helene S. Ward, Clerk
by _____
Deputy Clerk

OCT 26 98 0152

Printed On 04/30/2013 By JCC STORM WATER

EXEMPT FROM RECORDATION TAX UNDER VIRGINIA CODE SECTION 58.1-811(A)(3), AS AMENDED.

009260

Holly Ridge

DEED OF EASEMENT FOR NATURAL OPEN SPACE

THIS DEED OF EASEMENT, made this 31st day of May, 1996, by and between ASSOCIATED DEVELOPERS, INC., its successors and assigns ("Grantor") and the County of James City, Virginia ("Grantee").

WHEREAS, the Grantor is the owner of certain property known as Holly Ridge Subdivision, consisting of a tract of land containing 10.11 acres, more or less, more particularly described herein ("Property"); and

WHEREAS, Grantee has adopted The Chesapeake Bay Preservation Ordinance, Chapter 19B of the James City County Code, as required by Chapter 21 of Title 10.1 of the Code of Virginia to protect the Chesapeake Bay and its tributaries from nonpoint source pollution within the Chesapeake Bay drainage area; and

WHEREAS, Grantor wishes to preserve land as natural open space as part of Grantor's efforts to improve the quality of stormwater runoff from the Property.

NOW, THEREFORE, in recognition of the foregoing and in consideration of the sum of Ten Dollars ($10.00) and other good and valuable consideration, the receipt of which is hereby acknowledged, the Grantor does hereby grant and convey to Grantee an easement in perpetuity in gross, with the right in perpetuity to restrict the use as described below, of the portion herein described of that certain tract, lot, piece or parcel of land ("Easement Property"), to-wit:

> All those certain areas containing 2.04 acres, and designated as "Natural Open Space/Conservation Easement", "50' Greenbelt Buffer/Conservation Easement", "25' Landscape Protection Easement", and "Conservation Easement", as shown on that

Printed On 04/30/2013 By JCC STORM WATER

certain plat entitled, "SUBDIVISION PLAT, ~~HOLLY~~ Holly RIDGE SUBDIVISION", dated October 13, 1995, made by DJG, Engineers-Architects-Surveyors, which plat is recorded in the Clerk's Office of the Circuit Court for James City County and the City of Williamsburg, Virginia in Plat Book 64, page 46+47.

The restrictions hereby imposed on the use of the Easement Property, the acts which the Grantor covenants to do or not to do and the restrictions which the Grantee is hereby entitled to enforce, shall be as follows:

1. No building or structure shall be built or maintained on the Easement Property other than such building or structure approved by the County Engineer, in writing, except a wood and/or brick fence along the Jamestown Road right of way.

2. The Easement Property shall be kept free and clear of any junk, trash, rubbish or other unsightly or offensive material.

3. No new signs, billboards, outdoor advertising, road or utility lines shall be place on the property without the expressed written consent of the County Engineer, except for a subdivision identification sign and temporary marketing signs during construction and completion of the subdivision.

4. The Easement Property shall remain in its natural condition with respect to natural leaf litter or other ground covering vegetation, understory vegetation or shrub layer and tree canopy. The activities of Grantor within the Easement Property shall be limited to those which do not remove or damage any vegetation or disturb any soil. Such activities include selective trimming and pruning which will not alter the natural character of the Easement Property. Grantor may install walk trails or remove dead, diseased, poisonous or invasive vegetation with the expressed written consent of the county Engineer.

5. Grantee and its representatives may enter upon the Easement Property from time to

Printed On 04/30/2013 By JCC STORM WATER

time for inspection, to enforce the terms of this Easement and to post a sign or marker identifying Grantee's interest in the Easement Property as natural open space.

6. In the event of a violation of the Easement, the Grantee shall have the right to seek all appropriate legal and equitable relief, including, but not limited to, the right to restore the Easement Property to its natural condition and assess the cost of such restoration as a lien against the Easement Property.

Although this easement in gross will benefit the public in the ways recited above, nothing herein shall be construed to convey a right to the public of access to or use of the Easement Property, and the Grantor shall retain exclusive right to such access and use, subject only to the provisions herein recited.

WITNESS the following signatures and seals on the date first above written:

ASSOCIATED DEVELOPERS, INC.

By _____
President

COMMONWEALTH OF VIRGINIA
CITY OF NEWPORT NEWS, to-wit:

I, Susan R. Graczyk, a Notary Public for the Commonwealth of Virginia, do hereby certify that Henry H. Stephens, President, Associated Developers, Inc., whose name is signed to the foregoing Deed, has acknowledged the same before me in the jurisdiction aforesaid.

Given under my hand this 27th day of June, 1996.

My commission expires: July 31, 1999

Susan R. Graczyk
Notary Public

3.4

Printed On 04/30/2013 By JCC STORM WATER

The form of this deed of easement is approved and, pursuant to Resolution of the Board of Supervisors of James City County, Virginia, duly executed on the 17th day of May, 1993, this conveyance is hereby accepted on behalf of said County.

Date: 6/28/96

Leo P. Rogers
County Attorney

COMMONWEALTH OF VIRGINIA
CITY/COUNTY OF James City, to-wit:

I, Carole C. Giuliano, a Notary Public for the Commonwealth of Virginia, do hereby certify that Leo P. Rogers, Attorney for James City County, Virginia, has acknowledged the same before me in the jurisdiction aforesaid.

Given under my hand this 28 day of June, 1996.

My commission expires: May 31, 1998

Carole C. Giuliano
Notary Public

VIRGINIA: City of Williamsburg and County of James City, to Wit:
In the Clerk's Office of the Circuit Court of the City of Williamsburg and County of James City this 1st day of July, 96. This Deed of Easement was presented with certificate annexed and admitted to record at 12:49 o'clock
Teste: Helene S. Ward, Clerk
by [signature]
Deputy Clerk

Printed On 04/30/2013 By JCC STORM WATER

38833.001(009)

010639

DECLARATION

of

COVENANTS, CONDITIONS AND RESTRICTIONS

of

HOLLY RIDGE SUBDIVISION

THIS DECLARATION, made this 31st day of May, 1996, by ASSOCIATED DEVELOPERS, INC., a Virginia corporation, hereinafter referred to as "Declarant".

W I T N E S S E T H:

WHEREAS, Declarant is the owner of certain properties in James City County, State of Virginia, which may be described as follows:

> All that certain piece or parcel of land situate lying and being in James City County, Virginia, containing 10.11 Acres as shown on that certain plat entitled "SUBDIVISION PLAT, HOLLY RIDGE SUBDIVISION" prepared by DJG Engineers-Architects-Surveyors, dated October 13, 1995, and recorded in the Clerk's Office of the Circuit Court for James City County and the City of Williamsburg, Virginia, in Plat Book 64 page 46+47 to which reference is here made for a more particular description.

NOW, THEREFORE, Declarant hereby declares that all of the properties described above shall be held, sold and conveyed subject to the following easements, restrictions, covenants and conditions, which are for the purpose of protecting the value and desirability of, and which shall run with, the real property and be binding on all parties having any right, title or interest in the described properties or any part thereof, their heirs, successors and assigns, and shall inure to the benefit of each owner thereof.

Printed On 04/30/2013 By JCC STORM WATER

ARTICLE I

DEFINITIONS

Section 1. "Association" shall mean and refer to HOLLY RIDGE HOMES ASSOCIATION, its successors and assigns (herein "the Association").

Section 2. "Owner" shall mean and refer to the record owner, whether one or more persons or entities, of a fee simple title to any Lot which is a part of the Properties, including contract sellers, by excluding those having such interest merely as security for the performance of an obligation.

Section 3. "Properties" shall mean and refer to that certain real property hereinbefore described.

Section 4. "Common Area" shall mean all real property (including the improvements thereto) owned by the Association for the common use and enjoyment of the owners. The Common Area to be owned by this Association at the time of conveyance of the first lot is described as follows:

> The Common Open Space as shown on said Plat containing 2.16 Acres may also include open space or green area which may be conveyed to the Homes Association, together with drainage and/or utility easements which may be conveyed to the Association for the use and benefit of the Owners.

Section 5. "Lot" shall mean and refer to any lettered/numbered lot or plot of land within a lettered/numbered block as shown upon the plat hereinabove referred to, with the exception of the Common Open Space, Right-of-Way Easement Area, and the Conservation Area.

Section 6. "Declarant" shall mean and refer to Associated Developers, Inc., its successors and assigns if such successors or assigns should acquire one

Printed On 04/30/2013 By JCC STORM WATER

or more undeveloped Lots from the Declarant for the purpose of constructing the initial improvements on such lot.

Section 7. "Mortgage" as used herein shall mean a mortgage or deed of trust, said terms having the same meaning and may be used interchangeably.

ARTICLE II

PROPERTY RIGHTS AND DUTIES

Section 1. Owner's Easements of Enjoyment. Every Owner shall have a right and easement of enjoyment in and to the Common Area which shall be appurtenant to and shall pass with the title to every Lot, subject to the following provisions:

(a) the right of the Association to restrict uses or activities inconsistent with the maintenance of the Common Area;

(b) the right of the Association to suspend the voting rights and right to use of the Common Area by an Owner for any period during which any assessment against his Lot remains unpaid; and for a period not to exceed 60 days for any infraction of its published rules and regulations;

(c) the right of the Association to dedicate or transfer all or any part of the Common Area to any public agency, authority, or utility for such purposes and subject to such conditions as may be agreed to by the Board of Directors.

(d) the right of the Association to assess or charge to every Owner fees or dues in order to have funds to maintain and care for the Common Area and any improvements located thereon.

(e) the transfer of a Lot automatically transfers membership in the Association and all rights of the transferor with respect to the Common

Printed On 04/30/2013 By JCC STORM WATER

Areas and facilities to which ownership of such lot relate.

Section 2. Delegation of Use. Any owner may delegate, in accordance with the By-Laws, his right of enjoyment to the Common Area facilities to the members of his family, his tenants, or contract purchasers who reside on the property.

Section 3. Leasing. Any owner may lease or rent his Lot as long as the use of the Lot is consistent with the restrictions herein and provided that the lease agreement between owner and lessee shall be written and shall provide that the terms of the lease shall be subject in all respects to the provisions of this Declaration and all other documents of the Association and that failure of the lessee to comply with the terms of such documents shall constitute a default under the lease.

Section 4. Association Duties. Upon conveyance of the Common Area to the Association, the Association shall have the duty to maintain and keep in good repair the same for the benefit of all Owners, including without limitation, proper maintenance of the lakes and drainage facilities which are located on the Common Area together with any streets, sidewalks, street lights, landscaping or other improvements which may be located upon the Common Area.

Section 5. Right of Entry by County. James City County personnel, in the performance of their official duties, are hereby granted a right of entry upon the common property of the Association, and this shall include, but not be limited to, law enforcement officers, rescue squad personnel and fire fighting personnel while in pursuit of their duties, and in the case of private streets, enforcement of clear emergency vehicle access.

Printed On 04/30/2013 By JCC STORM WATER

ARTICLE III

MEMBERSHIP AND VOTING RIGHTS

Section 1. Every Owner of a lot which is subject to assessment shall be a member of the Association. Membership shall be appurtenant to and may not be separated from ownership of any Lot which is subject to assessment.

Section 2. The Association shall have two classes of voting membership:

CLASS A. CLASS A members shall be all owners, with the exception of the Declarant (the term Declarant including a builder to whom Declarant has sold a Lot for the purpose of constructing a residence thereon), and shall be entitled to one vote for each Lot owned. When more than one person holds an interest in any Lot, all such persons shall be members. The vote for such Lot shall be exercised as they determine, but in no event shall more than one vote be cast with respect to any Lot.

CLASS B. The Class B member(s) shall be the Declarant (including a builder to whom Declarant has sold a Lot for the purpose of constructing a residence thereon), and the legal owner of such Lot shall be entitled to two (2) votes for each Lot owned as shown on said Plat or in any section which may be hereafter annexed. The Class B membership shall cease and be converted to Class A membership (subject to being reconverted to a Class B membership if, pursuant to a subsequent annexation of additional Lots the total votes outstanding in the Class A membership are less than the total votes outstanding in the Class B membership) on the happening of either of the following events, whichever occurs earlier:

(a) when the total votes outstanding in the Class A membership equal the total votes outstanding in the Class B membership; or

Printed On 04/30/2013 By JCC STORM WATER

(b) five (5) years from the date hereof.

ARTICLE IV

COVENANT FOR MAINTENANCE ASSESSMENTS

Section 1. Creation of the Lien and Personal Obligation of Assessments. The Declarant, for each Lot owned within the Properties, hereby covenants, and each Owner of any Lot by acceptance of a deed therefor, whether or not it shall be so expressed in such deed, is deemed to covenant and agree to pay to the Association: (1) annual assessments or charges, and (2) special assessments for capital improvements, such assessments to be established and collected as hereinafter provided. The annual and special assessments, together with interest, costs and reasonable attorney's fees, shall be a charge on the land and shall be a continuing lien upon the property against which each such assessments is made. Each such assessment, together with interest, costs, and reasonable attorney's fees, shall also be the personal obligation of the person who was the Owner of such property at the time when the assessment fell due. The personal obligation for delinquent assessments shall not pass to his successors in title unless expressly assumed by them.

Section 2. Purpose of Assessments. The assessments levied by the Association shall be used exclusively to promote the recreation, health, safety and welfare of the residents in the Properties and for the improvement and maintenance of the Common Area.

Section 3. Maximum Annual Assessment. Until January 1 of the year immediately following the conveyance of the Common Area to the Association, the maximum annual assessment shall be ONE HUNDRED DOLLARS ($100.00) per Lot.

(a) From and after the first year, the maximum annual

Printed On 04/30/2013 By JCC STORM WATER

assessment may be increased each year (computed on a cumulative basis) not more than ten percent (10%) above the maximum assessment for the previous year without a vote of the membership.

(b) From and after the first year, the maximum annual assessment may be increased above ten percent (10%) by a vote of more than two-thirds (2/3rds) of each class of members who are voting in person or by proxy, at a meeting duly called for this purpose.

(c) The Board of Directors may fix the annual assessment from time to time at an amount not in excess of the maximum.

Section 4. Special Assessments for Capital Improvements. In addition to the annual assessments authorized above, the Association may levy, in any assessment year, a special assessment applicable to that year only for the purpose of defraying, in whole or in part, the cost of any construction, reconstruction, repair or replacement of a capital improvement upon the Common Area, including fixtures and personal property related thereto, provided that any such assessment shall have the assent of more than two-thirds (2/3rds) of the votes of each class of members who are voting in person or by proxy at a meeting duly called for this purpose.

Section 5. Notice and Quorum for Any Action Authorized Under Sections 3 and 4. Written notice of any meeting called for the purpose of taking any action authorized under Section 3 or 4 shall be sent to all members not less than 15 days nor more than 30 days in advance of the meeting. At the first such meeting called, the presence of members or of proxies entitled to cast sixty percent (60%) of all the votes of each class of membership shall constitute a quorum. If

Printed On 04/30/2013 By JCC STORM WATER

the required quorum is not present, another meeting may be called subject to the same notice requirement, and the required quorum at the subsequent meeting shall be one-half (½) of the required quorum at the preceding meeting. No such subsequent meeting shall be held more than 60 days following the preceding meeting.

Section 6. Uniform Rate of Assessment. Both annual and special assessments must be fixed at a uniform rate for all Lots and may be collected in arrears or in advance on a monthly basis, or on a quarterly, semi-annual or annual basis as determined by the Board of Directors of the Association.

Section 7. Date of Commencement of Annual Assessments: Due Dates. The annual assessments provided for herein shall commence as to all Lots on the first day of the month following the conveyance of the Common area to the Association. The first annual assessment shall be adjusted according to the number of months remaining in the calendar year. The Board of Directors shall fix the amount of the annual assessment against each Lot at least thirty (30) days in advance of each annual assessment period. Written notice of the annual assessment shall be sent to every Owner subject thereto. The due dates shall be established by the Board of Directors. The Association shall, upon demand, and for a reasonable charge, furnish a certificate signed by an officer of the Association setting forth whether the assessments on a specified Lot have been paid. A properly executed certificate of the Association as to the status of assessments on a Lot is binding upon the Association as of the date of its issuance.

Section 8. Effect of Nonpayment of Assessments: Remedies of the Association. Any assessment not paid within thirty (30) days after the due date shall bear interest from the due date at the rate of eighteen percent (18%) per

Printed On 04/30/2013 By JCC STORM WATER

annum or as may be established from time to time by a vote of the Association. The Association may bring an action at law against the Owner personally obligated to pay the same, or foreclose the lien against the property. No Owner may waive or otherwise escape liability for the assessments provided for herein by non-use of the Common Area or abandonment of his Lot. Any defaulting Owner shall be liable for reasonable attorneys fees and court costs as may be awarded by the court.

Section 9. Subordination of the Lien to Mortgages. The lien of the assessments provided for herein shall be subordinate to the lien of any first mortgage. Sale or transfer of any Lot shall not affect the assessment lien. However, the sale or transfer of any Lot pursuant to mortgage foreclosure or any proceeding in lieu thereof, shall extinguish the lien of such assessments as to payments which became due prior to such sale or transfer. No sale or transfer shall relieve such Lot from liability for any assessments thereafter becoming due or from the lien thereof.

Section 10. Initial Capital Assessment. The Owner of each Lot shall pay to the Association an initial capital assessment of $100.00 upon the conveyance of a Lot to an Owner who is not a builder.

ARTICLE V

GENERAL PROVISIONS

Section 1. Enforcement. The Association, the Declarant, or any Owner, shall have the right to enforce, by any proceeding at law or in equity, all restrictions, conditions, covenants, reservations, liens and charges now or hereafter imposed by the provisions of this Declaration. Failure by the Association or by any Owner to enforce any covenant or restriction herein

Printed On 04/30/2013 By JCC STORM WATER

contained shall in no event be deemed a waiver of the right to do so thereafter.

Section 2. Severability. Invalidation of any one of these covenants or restrictions by judgment or court order shall in no wise affect any other provisions which shall remain in full force and effect.

Section 3. Amendment. The covenants and restrictions of this Declaration shall run with and bind the land, for a term of twenty (20) years from the date this Declaration is recorded, after which time they shall be automatically extended for successive periods of ten (10) years. This Declaration may be amended during the first twenty (20) year period by an instrument signed by not less than ninety percent (90%) of the Lot Owners, and thereafter by an instrument signed by not less than seventy-five percent (75%) of the Lot Owners. Any amendment must be recorded.

Section 4. Annexation. Associated Developers, Inc., together with such entity as Associated Developers, Inc. may have conveyed or assigned its rights and privileges as the "Declarant" hereunder, (Declarant and such Assignee being referred to collectively in this sub-paragraph as Declarant) reserves the right to annex to the Properties at any time, and from time to time, additional parcels of land owned by, or subsequently owned by, Declarant or by such entity as Associated Developers, Inc. may have conveyed or assigned its rights and privileges as the "Declarant" hereunder; such right or privilege of annexation may be made in the sole discretion of the Declarant without the necessity of the consent of Class A members, Class B members or the Association. Declarant may cause such annexation to be made by including the provisions of such annexation to be shown on such recordation plat, or by an instrument executed by Declarant and duly recorded, describing the parcel or parcel's to be annexed and referring

Printed On 04/30/2013 By JCC STORM WATER

to an making such parcel or parcels subject to the within Covenants, Conditions and Restrictions, or both. Upon any such annexation being so made, the real estate or "Properties" covered thereby, together with the Declarant and all Owners thereof, and their heirs, successors and assigns, shall be entitled to and subject to, all of the terms of the within Covenants, Conditions and Restrictions in the same manner as if such annexed parcel had been included within the legal description as contained in the first Whereas clause of Page 1 hereof, the same being defined as the "Properties" under Section 3 of Article I hereof.

It is further understood and agreed that such annexation of all or of any part of the real estate hereinabove described shall be solely at the option of the Declarant and Declarant may from time to time annex all or any part of the parts thereof as determined solely by the Declarant without the necessity of approval of any Lot Owner or the Association, anything to the contrary notwithstanding in the Articles of Incorporation or By-Laws of the Association.

Section 5. Encroachments. In the event any portion of any improvement on any Lot encroaches upon the Common Areas and facilities, as a result of construction, reconstruction, repair, shifting, settlement or movement of any portion thereof, a valid easement for the encroachment and for the maintenance of the same shall exist so long as the encroachment exists.

Section 6. Additional Covenants. It is understood and agreed, anything to the contrary contained herein notwithstanding, as follows:

(a) A first mortgagee will be provided written notification of any default by the mortgagor of such Lot or unit in the performance of such mortgagor's obligations under these Restrictions which is not cured within 30 days; as used herein the terms 'first mortgage, 'mortgage or 'mortgagor shall have the same

Printed On 04/30/2013 By JCC STORM WATER

meaning and import as 'first deed of trust', 'noteholder', or 'first deed of trust', or 'grantor of a deed of trust'; the terms 'mortgage' and 'deed of trust' for the purposes herein shall have the same meaning and intent.

(b) Any first mortgagee who comes into possession of a Lot or unit in the Properties pursuant to the remedies provided in the mortgage, or foreclosure of the mortgage, or deed (or assignment) in lieu of foreclosure, shall be exempt from any 'right of first refusal'.

(c) Any first mortgagee who comes into possession of the unit pursuant to the remedies provided in the mortgage, foreclosure of the mortgage, or deed (or assignment) in lieu of foreclosure, shall take the property free of any claims for unpaid assessments or charges against the mortgaged Lot or unit which accrue prior to the time such holder comes into possession of the Lot or unit.

(d) Unless at least 75% of the first mortgagees (based upon one vote for each first mortgage) of individual Lots or units in the Properties have given their prior written approval, the Association shall not be entitled to:

(1) by act or omission seek to abandon, petition, subdivide, encumber, sell or transfer real estate or improvements thereon which are owned, directly or indirectly, by such Association for the benefit of the Owners and Lots in the Properties.

The granting of easements for public utilities or for other public purposes consistent with the intended use of such property by the Association shall not be deemed a transfer within the meaning of this clause:

(2) change the method of determining the obligations, assessments, dues or other charges which may be levied against an Owner;

(3) by act or omission change, waive or abandon any scheme of

Printed On 04/30/2013 By JCC STORM WATER

regulations, or enforcement thereof, pertaining to the architectural design or the exterior appearance of units, the exterior maintenance of units, the maintenance of party walls or common fences and driveways, or the upkeep of lawns and plantings in the Properties;

(4) fail to maintain fire and extended coverage on insurable common area property on a current replacement costs basis in an amount not less than one hundred percent (100%) of the insurable value (based on current replacement cost);

(5) use hazard insurance proceeds for losses to any common area property for other than the repair, replacement or reconstruction of such improvements.

(e) First mortgagees shall have the right to examine the books and records of the Association or any entity which owns the common area property of the Association.

(f) First mortgagees of Lots or units in the Properties may, jointly or singly, pay taxes or other charges which are in default and which may have become a charge against any common area property and may pay overdue premiums on hazard insurance policies, or secure new hazard insurance coverage on the lapse of a policy, for such property and first mortgagees making such payments shall be owed immediate reimbursement therefor from the Association. Entitlement to such reimbursement is hereby agreed to and this instrument shall constitute an agreement in favor of all first mortgagees of Lots or units in the Properties.

(g) No provision of the Association Articles of Incorporation, or the declaration of easements, restrictions and covenants, or any similar instrument pertaining to the Properties or to Lots or units therein, gives a lot Owner or

Printed On 04/30/2013 By JCC STORM WATER

any other party priority over any rights of first mortgagees of Lots or units herein pursuant to their mortgages in the case of a distribution to lot Owners of insurance proceeds or condemnation awards for losses to or taking of the Association's common property.

(h) Lot Owners have a right to enjoyment of the common area property and such property is owned in fee by the Association. The common area property was conveyed to the Association unencumbered except for any easements granted for public utilities or for other public purposes consistent with the intended use of such property by the Association.

(i) In the event that management other than self-management is required of the Association, and in the event that the Association elects or decides to terminate, then all first mortgagees shall be given at least thirty (30) days' notice of said action.

(j) All first mortgagees shall be entitled to receive reasonable written notice of damage to or condemnation of any part of the common area and facilities.

ARTICLE VI

PROPERTY RESTRICTIONS

The Declarant does hereby declare, covenant and agree, for itself and its successors and assigns, that all residential Lots shown on said Plat (except such Lots may be needed for utilities and the like such as the pump station lots shown on said Plat) shall be hereafter held and sold subject to the following conditions and restrictions, to-wit:

Section 1. Land Use And Building Type: No lot shall be used except for residential purposes. No building or other improvement shall be erected,

Printed On 04/30/2013 By JCC STORM WATER

altered, placed or permitted to remain on any lot without the plans, specifications and design thereof having been approved in writing by the Architectural Review Committee referred to hereinafter. Notwithstanding the foregoing, the Declarant or any builder purchasing two or more Lots from Declarant may maintain a model home/sales office until such time as the residences constructed on all Lots have been sold to Owners other than builders.

The Architectural Review Committee may act in its sole discretion and may, from time to time, change, modify or alter its standards or guidelines relating to size, quality and design of buildings and improvements built upon the Lots.

Section 2. Building Location: The front of each numbered building lot shown on said plat is indicated by the "Minimum Building Set-Back Line", set forth on said plat. No building shall be located on any numbered building lot shown upon the said plat, unless the front of the said building faces the front of the lot upon which it is located, nor shall any building be located on any lot nearer to the front lot line than the minimum building set-back line shown on the recorded plat. The Architectural Review Committee may grant waivers or exceptions as to building line violations for good cause shown.

Section 3. Sewage Disposal: Every dwelling unit constructed within this subdivision shall be connected to the public sewage disposal system.

Section 4. Easements: Easements for installation and maintenance of utilities and drainage facilities are reserved as shown on the recorded plat of subdivision.

Section 5. Underground Electrical And Telephone Service: Neither poles nor other structures for the carrying or transmission of electric power or telephone service nor any electric or telephone line or cable, elevated or

Printed On 04/30/2013 By JCC STORM WATER

carried above the surface of the land or ground, and not completely enclosed within some building or structure permitted under the provisions of these restrictions, shall be erected, altered, placed or permitted to remain upon either: (1) any lot in the subdivision, or (2) in or upon any street, alley, sidewalk, curb, gutter or easement or right of way included within the subdivision. All electric and telephone service facilities constructed or placed within the subdivision, unless completely enclosed within some building or structure permitted under the provisions of these restrictions must be carried, housed or placed beneath the surface of land in the subdivision. This Section 5 shall not prohibit such electrical facilities or apparatus as may be required for public utilities and/or temporary electrical service during construction of improvements.

Section 6. Nuisances: No noxious or offensive activity shall be carried on upon any lot, nor shall anything be done thereon which may be or may become an annoyance to the neighborhood.

Section 7. Fences: No fence shall be erected or constructed without written approval of the Architectural Review Committee. No fence shall be permitted in any front yard, unless the Architectural Review Committee specifically approves an exception allowing the fence (front yard being defined to mean the area between the front of the house and the street upon which such Lot is situated). The Architectural Review Committee may require wooden or brick fences containing an attractive design consistent with the neighborhood, may restrict the height and location of fences and may exclude metal fences, pens or enclosures.

Section 8. Temporary Structures: No structure of a temporary character,

Printed On 04/30/2013 By JCC STORM WATER

trailer, basement, tent, shack, garage, barn or other outbuilding shall be used on any lot as a temporary residence.

Section 9. Livestock And Poultry: No animals, livestock or poultry of any kind shall be raised, bred or kept on any lot, except that dogs, cats or other similar household pets may be kept provided that they are not kept, bred or maintained for any commercial purpose and do not constitute a nuisance to their neighbors.

Section 10. Signs: No sign of any kind shall be displayed to the public view on any lot, except one professional sign of not more than one square foot, or a sign advertising the property for sale or rent of not more than three square feet, or a sign used by a builder to advertise the property during the construction and sales period of not more than five square feet.

Section 11. Garbage And Refuse Disposal: No lot shall be used or maintained as a dumping ground for rubbish. Trash, garbage or other waste shall not be kept except in sanitary containers. All incinerators or other equipment for the storage or disposal of such material shall be kept in a clean and sanitary condition to the rear of the dwelling concerned.

Section 12. Heating And Air Conditioning Equipment; Disc Antenna: No air conditioning or heating equipment shall be placed in front of any residence, and no storage tanks erected above the ground shall be permitted. No disc antenna larger than 24 inches in diameter shall be erected or maintained on any lot in the subdivision, except that upon proper screening, the Architectural Review Committee may authorize disc antennas greater than 24 inches in diameter.

Section 13. Trailers, Boats, Campers & Mobile Equipment: No trailers, boats, campers, or other mobile equipment except passenger automobiles and small

Printed On 04/30/2013 By JCC STORM WATER

trucks may be parked on the streets or on any lot within the front property set-back line.

Section 14. Subdivision Of Lots: None of the lots as shown on the said Plat may be subdivided into smaller or additional lots unless such smaller or additional lots comply with the subdivision requirements of the James City County; lot lines may be adjusted and/or additional parcels may be added so as to create new lots within the subdivision so long as the subdivision requirements of the County of James City are met.

Section 16. Conservation Easements:

(1) The Declarant does hereby covenant and agree, as a condition running with the land, that no activity will be performed on any applicable portion of property subject to these Restrictions which is designated on any Subdivision Plat or other recorded plat as a "Conservation Easement" involving a "Discharge of Fill Material" as that term is interpreted and applied by the United States Army Corps of Engineers pursuant to its authority under Section 404 of the Clean Water Act (33 U.S.C.A. 1251 et.seq.) unless (1) such activity is specifically authorized by the Corps of Engineers through issuance of an appropriate permit for the activity, or such activity is exempt from the requirement of a permit under applicable statutes and regulations, (2) such activity is consistent with the Covenants, Conditions and Restrictions as applicable to lots in the subdivision known as Holly Ridge and (3) such activity conforms to all other applicable requirements of federal, state and local laws, ordinance and regulations; nothing contained herein shall prevent the construction of residences or other improvements on portions of Lots which may be partially affected by a Conservation Easement with the residences and other

Printed On 04/30/2013 By JCC STORM WATER

improvements being constructed on the portion of such Lot not subject to the Conservation Easement, provided, however, that the Owner of any such Lot shall be entitled to use of the portion of the Lot subject to the Conservation Easement, but may not remove trees or other vegetation except for dead or diseased trees or vegetation, the intent being that the Conservation Easement areas shall remain in their natural state.

(2) The covenants herein contained shall lie in addition to all of the covenants, conditions, and restrictions contained in the Declaration.

(3) The Declarant, the Association, the Corps of Engineers, and any other federal, state or local government or agency having jurisdiction over tidal or non-tidal wetlands as defined in the Clean Water Act as hereinabove referred to shall have the right to enforce, by proceeding at law or in equity in the Circuit Court of James City County or the United States District Court for the Eastern District of Virginia, the covenants, conditions, restrictions and easements herein contained in this Section 16.

ARTICLE VII

ARCHITECTURAL REVIEW COMMITTEE

(In this Article VII the term Declarant shall have the same meaning as in Article V, Section 4.) Until such time as Declarant has conveyed the last Lot as shown on said Plat, or any Lot which may be hereafter annexed, Declarant shall designate an Architectural Review Committee consisting of three (3) persons which Associated Developers, Inc. may from time to time change. Upon the last Lot being conveyed by Declarant, or at such earlier time as Associated Developers, Inc. may elect, the Board of Directors of the Association shall elect an Architectural Review Committee consisting of three (3) persons who may also serve

Printed On 04/30/2013 By JCC STORM WATER

as officers or directors of the Association. All new construction of any improvement, including without limitation residences or fences, shall require the written approval of the Architectural Review Committee. Any subsequent addition to, or change of, or alteration of existing construction, shall in like manner, require approval of the Architectural Review Committee, provided, however, that repainting or repairs of what has been previously approved shall not require any subsequent approval. The Architectural Review Committee is authorized to review and determine in its sole discretion, the nature, kind, shape, height, materials, location or design or color of any improvement located upon the Properties to ensure harmony of external design and location in relation to surrounding structures and topography.

In the event the Architectural Review Committee fails to approve or disapprove such design and location within thirty (30) days after said plans and specifications have been submitted to it, approval will not be required and this Article will be deemed to have been fully complied.

IN WITNESS WHEREOF, the undersigned Declarant, ASSOCIATED DEVELOPERS, INC., has caused this instrument to be executed on its behalf as of the date and year first above written.

ASSOCIATED DEVELOPERS, INC.

By: _____
President

Printed On 04/30/2013 By JCC STORM WATER

STATE OF VIRGINIA

City of Newport News, to wit:

I, JENNIFER P ADAMS, a Notary Public in and for the City and State aforesaid, whose commission expires on the 31st day of MARCH, 1998, do hereby certify that Henry H. Stephens, President, Associated Developers, Inc., whose name is signed to the foregoing writing bearing date on the 31st day of May, 1996, has acknowledged the same before me in my City and State aforesaid.

Given under my hand this 23rd day of July, 1996.

Jennifer P Adams
Notary Public

83373.01

VIRGINIA: City of Williamsburg and County of James City, to Wit:
In the Clerk's Office of the Circuit Court of the City of Williamsburg and County of James City the 26 day of July, 1996. This Rec. 8
Restrictions was presented with certificate annexed and admitted to record at 1:46 o'clock
Teste: Helena S. Ward, Clerk
by Deputy Clerk

Jones, Blechman, Woltz & Kelly, P.C.
600 Thimble Shoals Boulevard
Post Office Box 12888
Newport News, Virginia 23612-2888

Printed On 04/30/2013 By JCC STORM WATER

070010114

Tax map numbers: Listed on Exhibit "A"

AMENDED AND RESTATED DECLARATION OF COVENANTS, CONDITIONS, AND RESTRICTIONS OF HOLLY RIDGE SUBDIVISION

This Amended and Restated Declaration is made as of this 6TH day of April, 2007 by HOLLY RIDGE HOMES ASSOCIATION, INC., a Virginia non-stock corporation, and the owners of Lots in Holly Ridge listed on Exhibit "A", (collectively "Grantors").

WITNESSETH

WHEREAS, Associated Developers, Inc., a Virginia corporation subjected certain real property as shown on a plat entitled " SUBDIVISION PLAT, HOLLY RIDGE SUBDIVISION" prepared by DOG Engineers-Architects-Surveyors, dated October 13, 1995 and recorded in the Office of the Clerk of the Circuit Court for the City of Williamsburg and the County of James City, Virginia in James City Plat Book 64, pages 46 and 47 to that certain Declaration of Covenants, Conditions and Restrictions of Holly Ridge Subdivision dated May 31, 1996 and recorded July 19, 1996 in the Office of the Clerk of the Circuit Court for the City of Williamsburg and the County of James City, Virginia in Deed Book 799, Page_____;

WHEREAS, the Declarant subjected the Properties to the Declaration for the purpose of protecting the value and desirability of the Properties; and

WHEREAS, the Declaration runs with the land and is binding on all parties having any right, title or interest in the Properties or any part thereof, their heirs; successors and assigns, and the Declaration inures to the benefit of each Owner; and

WHEREAS, the Association has determined that it is in the best interest of the Owners to amend and restate the Declaration;

WHEREAS, Article V, Section 3 of the above described Declaration provides that during the first twenty (20) years after recordation of the Declaration, the Declaration may be amended by an instrument signed by not less than 90% of the Owners in Holly Ridge; and

WHEREAS, 100 % of the Owners have approved this Amendment as evidenced by their signatures as shown on "Exhibit B", attached hereto.

NOW, THEREFORE, the Grantors declare that the Properties, as defined herein, shall be held, sold and conveyed subject to the following easements, restrictions, covenants and conditions contained in this Amended and Restated Declaration of Covenants, Conditions and Restrictions (the "Amendment"), which are for protecting the value and desirability of the Properties, which shall run with the real property and be binding on all parties having any right, title or interest in the described properties, or any part thereof, their heirs, successors and assigns, and shall inure to the benefit of each Owner.

ARTICLE 1
DEFINITIONS

1.1 Association shall mean and refer to Holly Ridge Homes Association, Inc., a Virginia nonstock corporation, its successors and assigns.

1.2 Owner shall mean and refer to the record owner, whether one or more persons or entity, of the fee simple title to any lot as described on the recorded plats above referenced, including contract sellers, but excluding those having such interest merely as security for the performance of an obligation.

1.3 Properties shall mean and refer to all that certain real property designated as Holly Ridge Subdivision described on the above referenced plats, including lots and common area.

1.4 Common Area shall mean all real property, including all improvements thereon, or any portion thereof, owned by the Association for the common use and enjoyment of the Owners.

1.5 Lot shall mean and refer to any numbered plot of land shown upon any recorded plat of the Properties except the Common Area. Lots shall include all improvements located thereon.

1.6 Governing Documents shall mean the Association Articles of Incorporation, this Amended and Restated Declaration, Bylaws, Rules and Regulations.

1.7 Capital Components shall mean those items, whether or not a part of the Common Area, for which the Association has the obligation for repair, replacement or restoration and for which the Board of Directors determines funding is necessary.

ARTICLE 2
PROPERTY RIGHTS

2.1 Owners' Easement on Common Area. Every Owner shall have a right and easement of enjoyment in and to the Common Area which shall be appurtenant to and shall pass with the title to every Lot, subject to the following rights:

2.1.1 The right of the Association to charge reasonable admission and other fees for the use of the Common Area;

2.1.2 The right of the Association to suspend an Owner's voting right and the right to use the Common Area for any period during which any assessment against the Owner's Lot remains unpaid or for violation of the Governing Documents.

2.1.3 The right of the Association to assess charges against an Owner for any violation of the Governing Documents for which the Owner or his family members, tenants, guests or other invitees are responsible.

2.1.4 The right of the Association to dedicate or transfer all or any part of the Common Area to any public agency, authority, or utility for such purposes and subject

to such conditions as may be agreed to by the Board of Directors.

2.1.5 The right of the Association to establish rules and regulations related to the Common Area.

2.1.6 The right of the Association to restrict the use of the Common Area or prohibit certain uses that are inconsistent or interfere with the maintenance of the Common Area.

2.2 Delegations of Right. Any Owner may delegate his right of enjoyment to the Common Area and facilities to the members of his or her family, tenants, or contract purchasers who reside at the property.

2.3 Association Responsibility for Common Area. The Association shall be responsible for the exclusivemanagement and control of the Common Area, repairs and maintenance necessary thereon (including related equipment and facilities), and shall keep it in good, clean, attractive, safe and sanitary condition, order, and repair.

2.4 Right of Entry by County. James City County personnel, in the performance of their official duties, are hereby granted a right of entry upon the Common Area and this shall include, but not be limited to, law enforcement officers, rescue squad personnel and fire fighting personnel in the pursuit of their duties, and in the case of private streets, enforcement of clear emergency vehicle access.

ARTICLE 3
MEMBERSHIP AND VOTING RIGHTS

3.1 Members. Every Owner of a Lot which is subject to assessment shall be a member of the Association. Membership shall be appurtenant to and may not be separated from ownership of the Lot which is subject to assessment.

3.2 Voting. The Association shall have one class of voting members, which shall consist of all Owners who shall be entitled to cast one vote for each Lot owned. When more than one person holds an interest in any Lot, all such persons shall be members. The members shall exercise the vote for such Lot as they determine, but in no event shall more than one vote be cast with respect to any Lot.

ARTICLE 4
COVENANT FOR ASSESSMENTS

4.1 Covenant. Each Owner of any Lot by acceptance of a deed therefor, whether or not it is expressed in the deed, is deemed to covenant and agree to pay to the Association: (1) annual assessments or charges; and (2) special assessments for capital improvements, such assessments to be established and collected as hereinafter provided. The annual and special assessments, together with interest, costs and reasonable attorney's fees shall be a charge on the land and shall be a continuing lien upon the property against which each assessment is made. Each such assessment, together with interest, costs and reasonable attorney's fees, shall also be the personal obligation of the person who was the Owner of such property

when the assessment fell due. The personal obligation for delinquent assessments shall not pass to successors in title, unless expressly assumed by the successors.

4.2 Purpose of Assessments. The assessments levied by the Association shall be used exclusively to benefit the recreation, health, safety and welfare of the residents in the Properties and for the improvement, maintenance and repairs of the Common Area.

4.3 Annual Assessment. The Board of Directors shall establish the amount of the annual assessment against each Lot at least thirty (30) days before each annual assessment period. The Board of Directors shall establish the due date and shall send an invoice to each Owner. The Association may, upon request, and for a reasonable charge, furnish a certificate signed by an officer of the Association setting forth whether the assessments on a specified Lot have been paid. Such certificates shall be conclusive evidence of payment of any assessment therein stated to have been paid.

4.4 Assessment Increase. Where the Board of Directors establishes an annual assessment with an increase greater than 10% from the previous assessment, the Owners shall approve the increase by the affirmative vote of a majority of the Owners, in person or by proxy, at a special meeting duly called for that purpose at which a quorum is present. Written notice shall be sent to all Owners not less than fifteen (15) days nor more than thirty (30) days before the meeting stating the purpose of the meeting.

4.5 Special Assessment. In addition to the annual assessment authorized above, the Association may levy, in any assessment year, a special assessment for defraying, in whole or in part, the cost of any construction, reconstruction, repair or replacement of a capital improvement upon the Common Area, including fixtures and personal property related thereto, provided that any such assessment shall have the assent of a majority of the votes at a meeting duly called for this purpose at which a quorum, as set forth in paragraph 4.6 below, is present. Written notice shall be sent to all Owners not less than fifteen (15) days nor more than thirty (30) days before the meeting stating the purpose of the meeting.

4.6 Quorum. The quorum for a meeting of members called under this Article 4 shall be a majority of the Owners. If the required quorum is not forthcoming at any meeting, another meeting may be called upon reasonable notice to the Owners. The required quorum at the subsequent meeting shall be one-third (1/3) of the required quorum at the preceding meeting. Such subsequent meeting shall be held within 60 days after the preceding meeting.

4.7 Delinquent Assessments. The Board of Directors may adopt a collection policy for the enforcement of assessments. Any assessment not paid when due shall be delinquent. The Association shall have all rights and remedies provided by law, including, but not limited to, those provided by the Property Owners Association Act concerning delinquent assessments. The Association is granted a lien upon each Lot. The lien shall secure the payment of monies from each Owner for which he is liable to the Association, plus interest at 18% per annum from the date such assessment first becomes due, costs and reasonable attorney's fees (minimum of 25% of the amount due) incurred in the enforcement of the lien. The Association may foreclose the lien as provided in the Property Owners' Association Act. The lien granted to the Association shall further secure such advances for taxes and payments on accounts of Institutional Lenders, liens or encumbrances which the Association may advance

to protect its lien. The personal liability of a delinquent Owner shall include liability for late charges, interest at the rate of 18% per annum, reasonable attorney's fees (minimum of 25% of the amount due), and court costs incurred by the Association in collecting such assessment or enforcement of the lien. If the Association elects to enforce the lien through foreclosure, the Owner shall be required to pay reasonable rent for the Lot, as determined by the Board, and the Association shall be entitled to appoint a receiver to collect the rents and profits. Nothing herein contained shall bar a suit to obtain a money judgment for unpaid assessments without waiving the lien securing the same, nor shall it prevent the Association from pursuing any other remedy available at law or equity, by virtue of the Property Owners Association Act, or by other provisions of the Governing Documents.

4.8 Subordination. Sale or transfer of any Lot shall not affect the assessment lien. However, if any person, firm or corporation acquires title to any Lot by virtue of any foreclosure of a first mortgage or a first deed of trust, such person, firm or corporation so acquiring title shall only be liable and obligated for assessments as shall accrue and become due and payable for said Lot after the date of acquisition of such title. However, such liens shall attach to any excess proceeds of the foreclosure or judicial sale. Nothing herein contained shall be construed as releasing the liable party from the payment of delinquent assessments or the enforcement of payment by means other than foreclosure.

4.9 Initial Capital Contribution. The Owner of each Lot shall pay to the Association an initial capital contribution in an amount to be determined on an annual basis by the Board of Directors which shall be treated as an assessment, including, but not limited to, the enforcement capabilities set forth herein.

4.10 Reserves. The Board of Directors shall conduct at least once every five years a study to determine the necessity and amount of reserves required to repair, replace and restore the Capital Components; review the results of that study at least annually to determine if reserves are sufficient; and make any adjustments the Board of Directors deems necessary to maintain reserves, as appropriate.

4.11 Association Budget and Reserves. To the extent that the reserve study indicates a need to budget for reserves, the Association budget shall include, without limitation, the current estimated replacement cost, estimated remaining life and estimated useful life of the capital components; as of the beginning of the fiscal year for which the budget is prepared, the current amount of accumulated cash reserves set aside, to repair, replace or restore capital components and the amount of the expected contribution to the reserve fund for that year; and a general statement describing the procedures used for the estimation and accumulation of cash reserves pursuant to this section and the extent to which the Association is funding its reserve obligations consistent with the study currently in effect. Any reserve amount included in the annual Association budget shall be treated as an assessment for purposes of collection, lien and enforcement.

ARTICLE 5
ARCHITECTURAL CONTROL

5.1 Appointment of Architectural Review Committee. The Board shall appoint an architectural review committee composed of three (3) or more Owners, who may also serve as officers or directors of the Association. The Architectural Review Committee or the Board may establish and adopt reasonable rules and regulations and architectural guidelines.

5.2 Powers and Duties. The Architectural Review Committee shall regulate the external design, appearance and location of improvements located on the Properties in such a manner so as to preserve and enhance values and to maintain a harmonious relationship among structures and the natural vegetation and topography. In furtherance thereof, the Architectural Review Committee shall:

5.2.1 Review and approve, modify, or disapprove written applications of Owners and of the Association for improvements or additions to Lots.

5.2.2 Adopt architectural standards subject to the confirmation of the Board of Directors.

5.2.3 Adopt procedures for the exercise of its duties.

5.3 Failure to Act. In the event the Architectural Review Committee fails to approve, modify, or disapprove, in writing, a correctly filed application within forty-five (45) days, the matter shall be submitted to the Board of Directors. Notification of total or partial disapproval shall include the reasons for each disapproval. Failure of the Architectural Review Committee or the Board of Directors to enforce the architectural standards or to notify an Owner of noncompliance with architectural standards or approved plans for any period of time shall not constitute a waiver by the Architectural Review Committee or the Board of Directors of the enforcement of this Amended and Restated Declaration at any later date.

5.4 Approval. No building, fence, wall or other structure shall be commenced, erected or maintained upon the Properties, nor shall any exterior addition, improvement, change or alteration be made, until the Owner submits an application including the plans and specifications showing the nature, kind, shape, height, materials, and location of the same to the Architectural Review Committee and the Architectural Review Committee has approved the application.

5.5 Drainage. No obstruction, diversion, bridging, or confining of existing drainage channels upon, under and/or across any portion of said property through which water has been caused to flow artificially shall be made by any person in a way that causes damage to any property. The Board of Directors or the Architectural Review Committee may determine that a new channel, a diverted bridge, or reconstruction of an existing channel is necessary to carry the amount of storm and other water liable to flow therein, and may approve the same. This provision shall not make the Association responsible for drainage issues on the property. The Lot Owner is responsible for assuring that any improvement placed on any Lot shall provide for appropriate drainage that does not cause damage to any other property.

ARTICLE 6
USE RESTRICTIONS

6.1 Residential Purpose. Each Lot shall be used exclusively for residential purposes. No building shall be erected, altered, placed or permitted to remain thereon other than one single-family dwelling (hereinafter referred to collectively as "dwellings" or severally as "dwelling"). No business or profession of any kind or nature shall be carried on or practiced in any dwelling without the express written consent of the Association.

6.2 Building Setback Lines. No building shall be located so as to violate the building set back lines shown on the Plat.

6.3 Nuisance, Offensive Activity Prohibited. No obnoxious or offensive activity shall be conducted or permitted on any of the Properties. Nothing shall be done thereon which may be or become an annoyance or a nuisance to the neighborhood.

6.4 Shed, Accessory Building. No structure, trailer, tent, shack, shed, barn, garage, accessory building, outbuilding or any other type of building shall be placed or constructed on any Lot without the prior written approval of the Architectural Review Committee. No structure, trailer, tent, shack, shed, barn, garage, accessory building, outbuilding or any other type of building shall be used on any Lot as a residence, either temporarily or permanently.

6.5 Vehicles. No boat, boat trailer, school bus, truck over 3/4 ton, camper, camper shell or camping trailer, or other mobile living or recreational vehicle, shall be stored, parked or kept on any of the streets or on any Lot within the front property set-back line area as shown on the Plat. Such items may not be lived in while stored or parked.

6.6 Animals, Pets. No animals, livestock or poultry of any kind shall be raised, bred or kept on any of the Properties. Dogs, cats or other household pets may be kept, provided that they are not kept, bred or maintained for any commercial purposes and do not become a nuisance to other Owners or occupants. No animal shall be allowed to run at large. The Board of Directors may establish and enforce policies, rules, and regulations regarding pets.

6.7 Signs; Advertisement. No sign of any kind may be displayed on any of the Properties, except one professional real estate sign of not more than three (3) square feet, advertising a Lot for sale or for rent; or one professional sign of not more than three (3) square feet.

6.8 Trash; Refuse. The Properties shall not be used or maintained as a dumping ground for rubbish or scrap. Trash, garbage or other waste shall not be kept on any of the Properties except in covered sanitary containers. All containers, trash cans or other equipment for the storage or disposal of trash and garbage shall be kept in a neat condition and stored behind the dwelling or screened as approved by the Architectural Review Committee.

6.9 Leasing. The leasing of Lots shall be subject to such reasonable rules and regulations as may be established, from time to time, by the Association. No Lot shall be leased at any given time, except this leasing restriction shall not apply to Owners as of the date of recording of this Amendment. The restriction shall commence and be applicable upon the sale, conveyance or transfer of a Lot subsequent to recording this Amendment.

6.10 wner Responsibility for Sidewalks. Each Owner, resident or lessee shall keep the sidewalks and passageways located on or adjacent to the respective Lot free from litter, debris, snow and ice.

ARTICLE 7
EASEMENTS AND ENCROACHMENTS

7.1 Easements; Encroachments. In the event any portion of any improvement on any Lot encroaches upon the Common Areas as a result of construction, reconstruction, repair, shifting, settlement or movement of any portion thereof, a valid easement for the encroachment and for the maintenance of the same shall exist so long as the encroachment exists.

ARTICLE 8
MORTGAGEES

8.1 Mortgagee Approval for Certain Amendments. Unless at least Two-thirds (2/3) of the first mortgagees (based upon one vote for each first mortgagee) of individual Lots in the Properties have given their prior written approval, the Association shall not be entitled to:

8.1.1 By act or omission seek to abandon, petitions, subdivide, encumber, sell or transfer real estate of improvements thereon which are owned, directly or indirectly, by such Association for the benefit of the Owners and Lots in the Properties. The granting of easements for public utilities or for other public purposes consistent with the intended use of such property by the Association shall not be deemed a transfer within the meaning of this clause.

8.1.2 Change the method of determining the obligations, assessments, dues or other charges which may be levied against an Owner.

8.1.3 By act or omission change, waive or abandon any scheme of regulations, or enforcement thereof, pertaining to the architectural design or the exterior appearance of the units, the exterior maintenance of units, the maintenance of common fences and driveways, or the upkeep of lawns and plants in the Properties;

8.1.4 Fail to maintain fire and extended coverage on insurable common area property on a current replacement costs basis in an amount not less than one hundred percent (100%) of the insurable value (based on current replacement costs);

8.1.5 Use hazard insurance proceeds for losses to any common area property for other than the repair, replacement or reconstruction of such improvements.

8.2 Right to Examine Books and Records. First mortgagees shall have the right to examine the books and records of the Association or any entity which owns the common area property of the Association. No provision of the Association Articles of Incorporation, or the Amended and Restated Declaration of Covenants, Conditions and Restrictions, or any similar instrument pertaining to the Properties or to Lots therein, gives a lot Owner or any

other party priority over any rights of first mortgagees of Lots herein pursuant to their mortgages in the case of distribution to Lot Owners on insurance proceeds or condemnation awards for losses to or taking of the Association's common property.

ARTICLE 9
GENERAL PROVISIONS

9.1 Rules and Regulations. The Board of Directors shall have the power to establish, adopt, and enforce rules and regulations with respect to use of the Common Areas and with respect to such other areas of responsibility assigned to the Association by this Amended and Restated Declaration, except where expressly reserved to the Owners. Rules and Regulations may be adopted by resolution and shall be reasonably published or distributed throughout the development. A majority of votes cast, in person or by proxy, convened in accordance with the provisions of the Association's Bylaws and called for that purpose, shall repeal or amend any rule or regulation adopted by the Board of Directors.

9.2 Enforcement. The Association and Owners, shall have the right to enforce, by any proceeding, all restrictions, conditions, covenants, reservations, rules, regulations, liens and/or charges now or hereafter imposed by the provisions of this Amended and Restated Declaration or the Rules and Regulations. Failure by the Association or by an Owner to enforce a restriction, condition, covenant, reservation, rule, regulation, lien and/or charges shall not be deemed a waiver of the right to do so thereafter. The Association shall be entitled to collect attorney fees and costs in any enforcement action.

9.3 Suspension of Owner's Rights; Assessing Charges. The Board of Directors of the Association shall have the power to (i) suspend an Owner's right to use facilities or services, including utility services, provided directly through the Association for nonpayment of assessments which are more than sixty days past due, to the extent that access to the lot through the common areas is not precluded and provided that such suspension shall not endanger the health, safety, or property of any Owner, tenant, or occupant and (ii) assess charges against any Owner for any violation of the Amended and Restated Declaration or Rules and Regulations for which the Owner or his family members, tenants, guests, or other invitees are responsible.

9.4 Due Process/Enforcement Procedures. Before any such charges or suspension may be imposed, the Owner shall be given an opportunity to be heard and to be represented by counsel before the Board of Directors. Notice of a hearing, including the charges or other sanctions that may be imposed, shall be hand-delivered or mailed by registered or certified mail, return receipt requested, to the Owner at the address of record with the Association at least fourteen days prior to the hearing. The amount of any charges so assessed shall not be limited to the expense or damage to the Association caused by the violation, but shall not exceed fifty dollars for a single offense or ten dollars per day for any offense of a continuing nature and shall be treated as an assessment against the Owner's Lot. The hearing result shall be hand delivered or mailed by registered or certified mail, return receipt requested, to the Owner at the address of record with the Association within seven days of the hearing.

9.5 Severability. Invalidation of any one of these covenants or restrictions by judgment or court order shall in no way affect any other provision, which shall remain in full force and effect.

Printed On 04/30/2013 By JCC STORM WATER

9.6 Term; Amendment. The covenants and restrictions of this Amended and Restated Declaration shall run with and bind the land, for a term of twenty (20) years from the date this Amended and Restated Declaration is recorded, after which time they shall be automatically extended for successive periods of ten (10) years. This Amended and Restated Declaration may be amended at any time by an affirmative vote of not less than two-thirds (2/3) of the Owners. Agreement of the required majority of Owners to any amendment of this Amended and Restated Declaration shall be evidenced by their execution of the amendment, or ratification thereof, or in accordance with the requirements of the Property Owners Association Act, and the same shall become effective when a copy of the amendment is recorded together with a certification, signed by the principal officer that the requisite majority of Owners approved the amendment.

IN WITNESS WHEREOF, the Association has caused this Amendment to be executed by MARY T. SAMMON, President of the Holly Ridge Homes Association, Inc. and attested by JOYCE L. BEHLENDORF the Secretary, who certify that not less than 90% of the Owners voted in favor of this Amendment.

HOLLY RIDGE HOMES ASSOCIATION, Inc.

By: Mary T. Sammon
MARY T. SAMMON, President

ATTEST:

Joyce L. Behlendorf
JOYCE L. BEHLENDORF, Secretary

Printed On 04/30/2013 By JCC STORM WATER

COMMONWEALTH OF VIRGINIA
CITY/COUNTY OF JAMES CITY, to-wit:

The foregoing Amended and Restated Declaration of Covenants, Conditions and Restrictions of the Holly Ridge Subdivision was acknowledged before me this 6th day of April ~~March~~, 2007 by MARY T. SAMMON, President of the Holly Ridge Homes Association, Inc. on behalf of the corporation.

My commission expires: 11/30/2008

Sherry O. Roberts
Notary Public

COMMONWEALTH OF VIRGINIA
CITY/COUNTY OF JAMES CITY, to-wit:

The foregoing Amended and Restated Declaration of Covenants, Conditions and Restrictions of the Holly Ridge Subdivision was acknowledged before me this 6th day of April, 2007 by Joyce L. Behlendorf, Secretary of the Holly Ridge Homes Association, Inc. on behalf of the corporation.

My commission expires: 11/30/2008

Sherry O. Roberts
Notary Public

Exhibit "A"

PARCEL/LOT #	ADDRESS	OWNER
1	2700 Holly Ridge	Hertzler, David
2	2704 Holly Ridge	Elliott, Doug/Anna
3	2708 Holly Ridge	Hoyt, Fran/Lou
4	2712 Holly Ridge	Fox, Michael
5	2724 Holly Ridge	Peterson, Betty
6	2728 Holly Ridge	Anderson, Bob/Jennifer
7	2732 Holly Ridge	Hamilton, John/Janet
8	2736 Holly Ridge	Holloway, Brian/Laura
9	2740 Holly Ridge	Moore, Bill/Audrey
10	2737 Holly Ridge	McQuade, Claire
11	2733 Holly Ridge	Clark, Bix/Kathy
12	2729 Holly Ridge	Bush, Phyllis
13	2725 Holly Ridge	Elsasser, Ed/Jan
14	2721 Holly Ridge	Babischkin, Stan/Sue
15	4600 Taber Park	Woolfolk, Don/Lillian
16	4604 Taber Park	Behlendorf, Jack/Joyce
17	4608 Taber Park	Bourgoin, Sherri Wells, John
18	4612 Taber Park	Sammon, Mary
19	4609 Taber Park	Jeon, James Song, Annie
20	4605 Taber Park	Walker, Bob/Janet
21	4601 Taber Park	Brodgen, Bill/Ann