CERTIFICATE OF AUTHENTICITY

THIS IS TO CERTIFY THAT THE FOLLOWING ELECTRONIC RECORDS ARE TRUE AND ACCURATE REPRODUCTIONS OF THE ORIGINAL RECORDS OF JAMES CITY COUNTY GENERAL SERVICES DEPARTMENT- STORMW ATER DIVISION; WERE SCANNED IN THE REGULAR COURSE OF BUSINESS PURSUANT TO GUIDELINES ESTABLISHED BY THE LIBRARY OF VIRGINIA AND ARCHIVES; AND HA VE BEEN VERIFIED IN THE CUSTODY OF THE INDIVIDUAL LISTED BELOW.

BMPNUMBER: **PC105**

DATE VERIFIED: **May 18, 2016**

QUALITY ASSURANCE TECHNICIAN: **Charles E. Lovett II**

LOCATION: WILLIAMSBURG, VIRGINIA

Stormwater Division

MEMORANDUM

DATE: March 4, 2010

TO: Michael J. Gillis, Virginia Correctional Enterprises Document Management Services

FROM: Jo Anna Ripley, Stormwater

PO: 270712

RE: Files Approved for Scanning

General File ID or BMP ID: PC105

PIN: 3210100012

Subdivision, Tract, Business or Owner Name (if known): James City County

Property Description: Warhill Tract Parcel 1

Site Address: 5700 Warhill Trail and 4615 Opportunity Way

(For internal use only) **Box** 24 **Drawer:** 3

Agreements: (in file as of scan date) **N** **Book or Doc#:** **Page:**

Comments

WATERSHED	PC	MAINTENANCE PLAN	No	CTRL STRUC DESC	Unk
BMP ID NO	105	SITE AREA acre	521.7	CTRL STRUC SIZE inches	
PLAN NO	SP-61-98	LAND USE	Public Park	OTLT BARRL DESC	Unk
TAX PARCEL	(32-01)(01-12)	old BMP TYP	Wet Pond	OTLT BARRL SIZE inch	
PIN NO	3210100012	JCC BMP CODE			
CONSTRUCTION DATE		POINT VALUE		EMERG SPILLWAY	No
PROJECT NAME	Warhill Tract-JCC Sports Complex			DESIGN HW ELEV	
FACILITY LOCATION	Existing Large Pond (NW BB Diamonds)			PERM POOL ELEV	
CITY-STATE	Williamsburg, Va. 23188	SVC DRAIN AREA acres		2-YR OUTFLOW cfs	0.00
CURRENT OWNER	James City County, Virginia			10-YR OUTFLOW cfs	0.00
OWNER ADDRESS	101 Mounts Bay Road			REC DRAWING	No
OWNER ADDRESS 2	P.O. Box 8784	SERVICE AREA DESCRI	Public Park & Woods		
CITY-STATE-ZIP CODE	Williamsburg, Va. 23187	IMPERV AREA acres	0	CONSTR CERTI	No
OWNER PHONE		RECV STREAM	UT to Longhill Swamp PC		
MAINT AGREEMENT	No	EXT DET-WQ-CTRL	No	LAST INSP DATE	10/24/2000
EMERG ACTION PLAN	No	WTR QUAL VOL acre-ft	0	INTERNAL RATING	4
		CHAN PROT CTRL	No	MISC/COMMENTS	
		CHAN PROT VOL acre-ft	0	Phase I Insp. Exist Wet Pond #2 Upper Pond. Sta. 48+00 1500' Lt.	
		SW/FLOOD CONTROL	Yes		
		GEOTECH REPORT	No		

Get Last BMP No

Return to Menu

WARHILL TRACT

JCC - SPORTS COMPLEX
SP-61-98

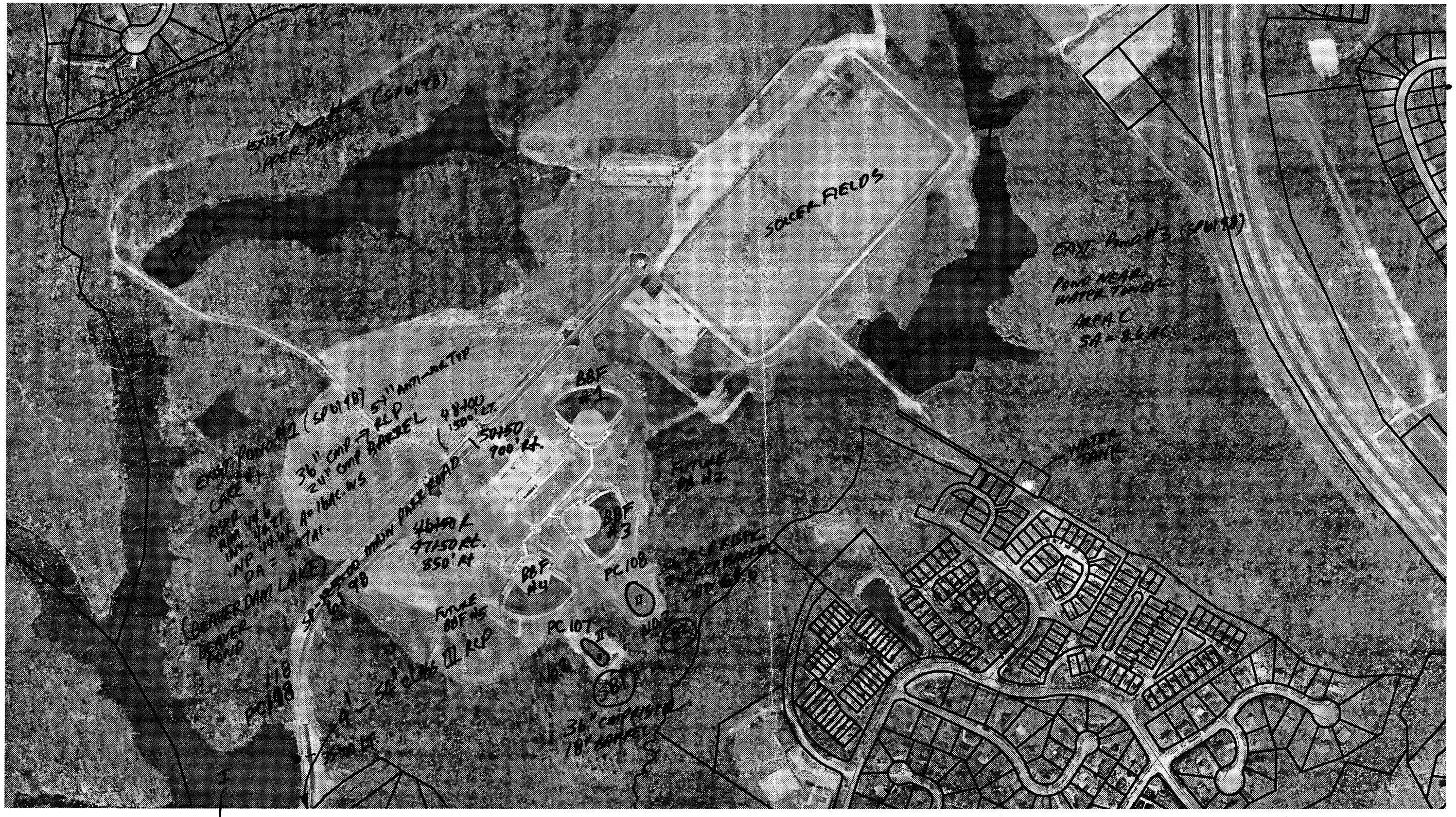

Form PC014

SP-61-98 2

GPIN 3210100012
5700 WARHILL TRAIL
JCC
POB 8784
521.7 AC.
PARCEL-1 WH TRACT
RBMINO

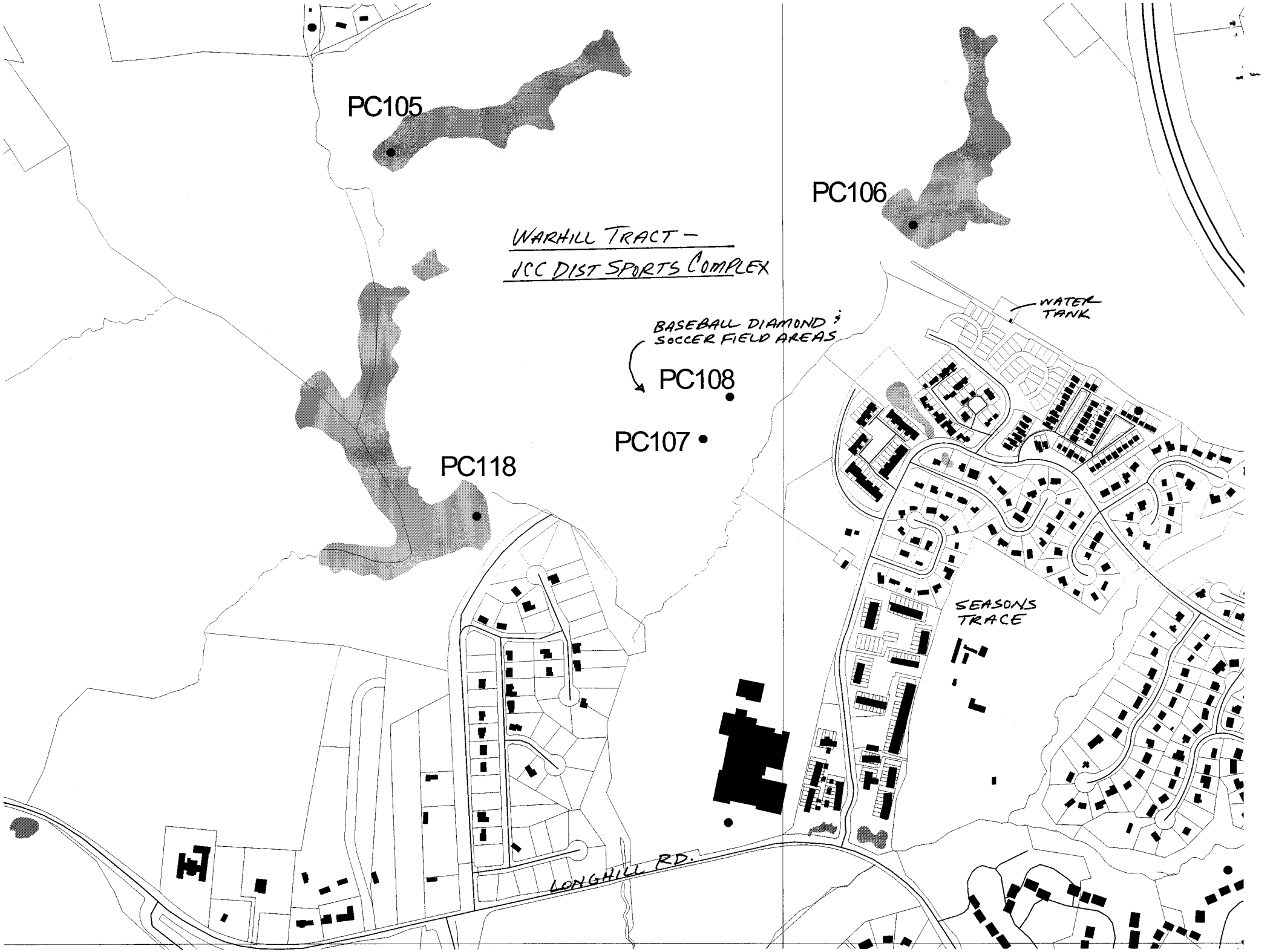
PC105
PC106
WARHILL TRACT –
JCC DIST SPORTS COMPLEX
WATER TANK
BASEBALL DIAMOND & SOCCER FIELD AREAS
PC108
PC107
PC118
SEASONS TRACE
LONGHILL RD.

Stormwater Division

MEMORANDUM

DATE: March 13, 2010

TO: Michael J. Gillis, Virginia Correctional Enterprises Document Management Services

FROM: Jo Anna Ripley, Stormwater

PO: 270712

RE: Files Approved for Scanning

General File ID or BMP ID: PC105

PIN: 3210100012

Subdivision, Tract, Business or Owner Name (if known): James City County

Property Description: Warhill Tract Parcel 1

Site Address: 5700 Warhill Trail and 4615 Opportunity Way

(For internal use only) **Box** 2 **Drawer:** 2

Agreements: (in file as of scan date) **N** **Book or Doc#:** **Page:**

Comments

WATERSHED	PC	MAINTENANCE PLAN	No	CTRL STRUC DESC	CMP
BMP ID NO	105	SITE AREA acre	521.7	CTRL STRUC SIZE inches	24
PLAN NO	SP-61-98	LAND USE	Public Park	OTLT BARRL DESC	CMP
TAX PARCEL	(32-01)(01-12)	old BMP TYP	Wet Pond	OTLT BARRL SIZE inch	15
PIN NO	3210100012	JCC BMP CODE			
CONSTRUCTION DATE		POINT VALUE		EMERG SPILLWAY	Yes
PROJECT NAME	Warhill Tract-JCC Sports Complex			DESIGN HW ELEV	
FACILITY LOCATION	Existing Large Pond (NW BB Diamonds)			PERM POOL ELEV	
CITY-STATE	Williamsburg, Va. 23188	SVC DRAIN AREA acres	105	2-YR OUTFLOW cfs	0.00
CURRENT OWNER	James City County, Virginia			10-YR OUTFLOW cfs	0.00
OWNER ADDRESS	101 Mounts Bay Road			REC DRAWING	No
OWNER ADDRESS 2	P.O. Box 8784	SERVICE AREA DESCRI	Public Park & Woods		
CITY-STATE-ZIP CODE	Williamsburg, Va. 23187	IMPERV AREA acres	0.00	CONSTR CERTIF	No
OWNER PHONE		RECV STREAM	UT to Longhill Swamp PC		
MAINT AGREEMENT	No	EXT DET-WQ-CTRL	No	LAST INSP DATE	10/24/2000
EMERG ACTION PLAN	No	WTR QUAL VOL acre-ft	0	INTERNAL RATING	4
		CHAN PROT CTRL	No	MISC/COMMENTS	
		CHAN PROT VOL acre-ft	0	West Pond; Wet Pond #2 Upper Pond. Failed barrel.	
		SW/FLOOD CONTROL	Yes		
		GEOTECH REPORT	No		

Get Last BMP No

Return to Menu

L. Preston Bryant, Jr.
Secretary of Natural Resources

Joseph H. Maroon
Director

COMMONWEALTH of VIRGINIA

DEPARTMENT OF CONSERVATION AND RECREATION

203 Governor Street, Suite 206
Richmond, Virginia 23219-2010
(804) 371-6095 Fax (804) 371-2630

August 2, 2006

RECEIVED
AUG - 8 2006
DEVELOPMENT MANAGEMENT
RECEIVED
AUG 1 6 2006
ENVIRONMENTAL DIVISION

Wayland Bass
James City County
101 Mounts Bay Road
Williamsburg, VA 23187

RE: Western Pond Dam, Inventory Number 09528

Dear Mr. Bass:

The Operation and Maintenance Certificate Application for Western Pond Dam, Inventory Number 09528, and the required supporting documents have been reviewed for compliance with the provisions of the Code of Virginia, Dam Safety Act, (Section 10.1-604 et. seq.) and the regulations promulgated by the Virginia Soil and Water Conservation Board (Board). Based on this information, on July 20, 2006, the Board issued a six-year (7/20/2006 – 7/31/2012) Regular Class III Operation and Maintenance Certificate (Certificate). The Certificate and other pertinent data are enclosed.

The Dam Safety Act requires dam owners to maintain their dam in a condition to prevent unreasonable threats to life and property of others. The classification of your dam and the Certificate issued were based on the current known downstream hazard potential from upstream characteristics, a re-inspection/inventory/as-built report, operation and maintenance plan, inspection schedule and an emergency action plan. The actions contained in the documents accompanying your Certificate Application must be adhered to for the duration of the terms contained in the Certificate. To assist you in adhering to the terms of the Certificate, the following table provides a schedule of dates to submit required documents to this office.

Annual Owner's Inspection Report	Owner's Engineer Inventory Report	Renewal Certification Six Year Application by Owner and Owner's Engineer
7/31/2007		
7/31/2008		
7/31/2009	11/10/2009	
7/31/2010		
7/31/2011	4/30/2012	4/30/2012

Should you have questions, please direct them to David D. Conniff, P.E., Dam Safety Regional Engineer, Department of Conservation and Recreation, Dam Safety and Floodplain Management Division, 203 Governor Street, Suite 206, Richmond, Virginia 23219, telephone 804-786-1359, or e-mail david.conniff@dcr.virginia.gov.

Sincerely,

William G. Browning

William G. Browning
Director, Dam Safety & Floodplain Management Division

Enclosures
c: James M. Robinson, P.E., Dam Safety Program Manager
David D. Conniff, P.E., Region 2 Engineer

COMMONWEALTH *of* VIRGINIA

DEPARTMENT OF CONSERVATION AND RECREATION
DIVISION OF DAM SAFETY
VIRGINIA SOIL AND WATER CONSERVATION BOARD

DAM SAFETY CERTIFICATE
REGULAR
CLASS III OPERATION & MAINTENANCE CERTIFICATE NUMBER 09528

James City County, owner of Western Pond Dam in James City County, is entitled to operate and maintain this dam pursuant to the provisions of the Dam Safety Act (Section 10.1-604 et seq., Code of Virginia) and Regulations promulgated thereunder.

This certificate is for a term of six years. It becomes effective July 20, 2006 and expires July 31, 2012. In accordance with §4VAC50-20-100F of the Regulations, the owner shall apply for a new certificate 90 days prior to its expiration.

Joseph H. Maroon
Secretary, Virginia Soil and Water
Conservation Board

DATA SHEET - OPERATION AND MAINTENANCE CERTIFICATE

Department of Conservation & Recreation
Division of Dam Safety & Floodplain Management
203 Governor Street, Suite 206
Richmond, VA 23219-2094

Name of Dam: **Western Pond Dam**	Inventory Number: **09528**
Location: **trib – Long Hill Creek**	City/County: **James City**
Owner: **James City County** **Attn: Wayland Bass, Dept. of Develop. Mgmt** Address: **101 Mounts Bay Road** City/Town/Zip: **Williamsburg VA 23187**	Designed by: **Timmons Group** Constructed by: **Curtis Contracting Inc.** Year Constructed (Modified): **unk (2006)**
Type of Dam: **Earthen**	Purpose: **Stormwater Mgmt / Irrigation**
Drainage Area (Sq. Mi.): **.15**	Type of Watershed: **agricultural / wooded**
Total Height (Ft.): **15**	Elevation: **61**
Normal Pool Height (Ft.): **12**	Elevation: **58**
Maximum Capacity (Acre Ft.): **67**	Maximum Area (Acres): **9.0**
Normal Capacity (Acre Ft.): **45**	Normal Area (Acres): **7.2**
Size Classification: **Small**	Hazard Classification: **III**
Required Spillway Design Flood: **100-yr**	Available Spillway Design Flood: **100 - yr**
Type of Spillway: **grass**	*(Note if Section 130):*

Operation and Maintenance Plans & Schedule by: **Michael L. Claud, Va. P.E. #033586**

( ) Reinspection or (X) Inventory Report by: **Michael L. Claud, Va. P.E. #033586**

Emergency Action Plan filed with:
(X) Virginia Dept. of Emergency Management
(X) Local Coordinator of Emergency Services City/County: **James City Co.**

Application Reviewed and Recommended for: **Regular O & M Certificate (7/20/06 – 7/31/12)**

If Conditional Certificate, the conditions are:

By: **David D. Conniff, P.E. VA #033641** Date: **July 13, 2006**

Concurrence with the Recommendation:

By: **William G. Browning, Director** Date: **July 19, 2006**

TIMMONS GROUP

YOUR VISION ACHIEVED THROUGH OURS.

June 7, 2006

RECEIVED
JUN 13 2006
ENVIRONMENTAL DIVISION

RECEIVED
JUN - 9 2006
DEVELOPMENT MANAGEMENT

Mr. David Conniff, P.E.
Commonwealth of Virginia
Department of Conservation & Recreation
Division of Dam Safety
203 Governor Street
Richmond, VA 23219-2010

Re: Western Pond (PC 105) Dam Renovations, James City County
Inventory #09528

Dear David;

Enclosed is a copy of the Inventory Report, Operation & Maintenance Application and Emergency Action Plan for the Western Pond Dam (PC 105) at the Warhill Tract within James City County. You had previously requested this information for your files.

Should you have any questions regarding this submittal or need any additional information, please feel free to call me at (804) 200-6413.

Sincerely,

Michael L. Claud, P.E.

cc: Wayland Bass, James City County

enclosures

1001 Boulders Parkway, Suite 300 | Richmond, Virginia 23225
TEL 804.200.6500 FAX 804.560.1016
Site Development | Residential | Infrastructure | Technology
www.timmons.com

Scott Thomas

From: Scott Thomas
Sent: Wednesday, June 14, 2006 4:29 PM
To: 'Mike Claud'
Cc: Wayland Bass; Steven W. Hicks
Subject: Warhill West Pond Dam PC105

Somehow I got a copy of a transmittal dated June 7, 2006 from you & your office to Mr. David Conniff of DCR. It appears to be a copy of executed inventory report, O&M application and an emergency action plan. In looking at the documents, it does not appear that page 4 of the inventory report (form DCR 199-104) was signed by the owner. The emergency action plan and the O&M permit were signed by Steven Hicks.

Scott J. Thomas, P.E.
Chief Engineer - Stormwater
James City County
Environmental Division

Visit:
http://www.james-city.va.us/resources/devmgmt/div_devmgmt_environ.html
and
www.protectedwithpride.org

DCR
Department of Conservation & Recreation
CONSERVING VIRGINIA'S NATURAL & RECREATIONAL RESOURCES

INVENTORY REPORT FOR CLASS III AND CLASS IV IMPOUNDING STRUCTURES

Reference: Impounding Structure Regulations, 4VAC50-20-00 et seq., Virginia Soil and Water Conservation Board

1. Project Information:
   a. Name of Impounding Structure Western Pond Dam (PC 105)
   b. Inventory Number 09528 Other Name (if any) _____
   c. Name of Reservoir _____
   d. Purpose of Reservoir recreational

2. Location of Impounding Structure:
   a. City/County James City County Magisterial District _____
   b. Located 1± miles upstream of Highway. No. 612 Longhill Road
   c. Name of River or Stream tributary to Longhill Swamp Creek
   d. Latitude 37° 19' 32" Longitude 76° 46' 17'

3. Ownership:
   a. Owner's Name James City County
   b. Mailing Address 101 Mounts Bay Road, Williamsburg, Virginia 23187-8784
   c. Telephone (757) 253-6671

4. Owner's Engineer:
   a. Engineering Firm/Engineer Timmons Group / Michael L. Claud, P.E.
   b. Professional Engineer Virginia Number 033586
   c. Mailing Address 1001 Boulders Parkway, Suite 300, Richmond, Virginia 23225
   d. Telephone (804) 200-6413

5. Impounding Structure Data (All elevations NGVD unless noted):
   a. Type of Material earth X concrete _____ masonry _____
      Other _____

	Design Configuration	
b. Top of Dam	61±	Elev. (if known)
c. Downstream Toe (Lowest)	46±	Elev. (if known)
d. Height of Dam	15±	Feet

e. Crest Length (Exclusive of Spillway) 220± Feet

f. Crest Width 20± Feet

g. Upstream Slope 2.5 H: 1 V

h. Downstream Slope 2.5 H: 1 V

6. Reservoir Data

	Design Configuration	
a. Maximum Capacity	67	Acre-feet
b. Maximum Pool	61	Elev. (if known)
c. Maximum Pool Surface Area	9.0	Acres
d. Normal Capacity	45	Acre-feet
e. Normal Pool	58.2	Elev. (if known)
f. Normal Pool Surface Area	7.2	Acres
g. Freeboard (Normal Pool to Top)	2.8	Feet
h. Freeboard (Normal Pool to Emergency)	1.8	Feet

7. Spillway Data

	Type	Construction Material	Maximum Capacity
a. Low Level Drain	N/A		
b. Principal Spillway	Riser	CMP	
c. Emergency Spillway	Weir	grass	

	Design Configuration	
d. Low Level Drain	N/A	Elev. (if known)
e. Principal Spillway	45.04	Elev. (if known)
f. Emergency Spillway	60±	Elev. (if known)

g. Briefly describe the low level drain and principal spillway to include dimensions, materials of construction, trash guards, location in reservoir and through dam, and orientation of intake and discharge to dam if looking downstream: The principal outlet for the dam is a 12" CMP riser with a 12" CMP outlet pipe. There is a metal trash rack on top of the riser. The riser is located in approximately the centerline of the dam.

h. Describe the emergency spillway to include dimensions, whether the spillway is an earth channel or other construction, spillway surface protection, and orientation to dam if looking downstream: The emergency spillway is an earthen weir approximately 22 feet wide. The spillway is grass lined and is located on the right abutment of the dam looking downstream.

8. Watershed Data (Class III only):

a. Drainage Area 0.154 Sq. Miles

b. Type and Extent of Watershed Development forested land and grass fields

c. Time of Concentration 73 minutes Method TR-55

d. Spillway Design Flood used (mark appropriate box)

_____PMF, source _____

_____1/2 PMF, source _____

_X___100 Year, source HEC-1 Analysis_____

_____50 Year, source _____

_____Other, source _____

e.. Design inflow hydrograph: Volume _64__acre-feet;

Peak inflow __235____C.F.S.;

Rainfall duration of design inflow hydrograph __12.58____hours

f. Freeboard during passage of spillway design flood ___0.32±____feet

9. Impounding Structure History

a. Date construction completed unknown_____

b. Design by _unknown_____ Date:_____

c. Built by __unknown_____ Date:_____

d. Inspection dates _unknown_____

e. Inspections by ___unknown_____

f. Description of repairs __unknown_____

g. Has the impounding structure ever been overtopped? _____ Yes _____ No Unknown

10. Impounding Structure Assessment:

a. Provide brief descriptions for each item:

i. Condition of the impounding structure: the existing impoundment structure is in good condition but overgrown with trees along the downstream face.

ii. Condition of the reservoir: the existing reservoir area is in good condition.

iii. Condition of the upstream area: the upstream area is mainly undeveloped forested land.

iv. Condition of the downstream area: The pond outfalls directly into the headwaters of and existing downstream pond.

b. Provide a narrative describing any recent changes in the impounding structure, reservoir, upstream area, and downstream area: No recent changes. There is a development plan for the area that will include construction of a community college, high school and sports stadium.

c. Recommendations for remedial measures: the dam currently does not overtop during the 100-year storm event. However, future development within the watershed will divert additional drainage to this pond. The pond will also need to serve as a stormwater BMP for the County.

Based on these requirements the dam will need to be raised and the outlet structures redesigned in order to convey the 100-year storm event without overtopping the dam.

11. Provide a sketch of the impounding structure. (see attached sheet)

CERTIFICATION BY OWNER'S ENGINEER (Class III only)

I hereby certify that the information provided in this Inventory Report has been examined by me and found to be true and correct in my professional judgment.

Signed_____
(Professional Engineer)

Virginia Number 033586_____

This 24th day of June, 2005.

CERTIFICATION BY OWNER (Class IV only)

I hereby certify that the information provided in this Inventory Report is true and correct.

Signed_____
(Owner)

This _____day of _____,2005

Please fill out and mail to:
Department of Conservation and Recreation
Division of Dam Safety
203 Governor Street
Richmond, Virginia 232192094

Department of Conservation & Recreation
CONSERVING VIRGINIA'S NATURAL & RECREATIONAL RESOURCES

EMERGENCY ACTION PLAN FOR CLASS I, CLASS II AND CLASS III IMPOUNDING STRUCTURES

Reference: Impounding Structure Regulations, 4VAC52-20-00 et seq., Virginia Soil and Water Conservation Board

1. Name of Impounding Structure: Western Pond (PC 105) Dam

   Inventory Number: 09528 Other Name (if any): _____

2. Hazard Potential Classification from Table I, Virginia Dam Safety Regulations:
   Class I Class II Class III (Underline One)

3. Name of Owner: James City County

   Address: 101 Mounts Bay Road, Williamsburg, VA 23187-8784

   Telephone: (Business)(757) 253-6671 (Residential)(_____)_____

4. Name of Dam Operator: Steve Hicks, General Services Manager

   Address: 113 Tewning Road, Williamsburg, VA 23188

   Telephone: (Business)(757) 259-4127 (Mobile)(757) 592-8664

   Name of Alternate Operator: Craig Nordeman

   Telephone: (Business)(757) 259-4083 (Mobile)(757) 592-6024

5. Name of Rainfall or Staff Gage Observer for Dam: Steve Hicks, General Services Manager

   Address: 113 Tewning Road, Williamsburg, VA 23188

   Telephone: (Business)(757) 259-4127 (Mobile)(757) 592-8664

   Name of Alternate Operator: Craig Nordeman

   Telephone: (Business)(757) 259-4083 (Mobile)(757) 592-6024

6. 24-Hour Dispatch Center Nearest Dam-Police/Fire/Sheriff's Departments: Central Dispatch

   Address: 3127 Forge Road, Williamsburg, VA 23168

   Telephone: (Business)(757) 566-0112

7. Name of City/County Emergency Services Coordinator(s): Wilton Bobo

Address: 3127 Forge Road, Williamsburg, VA 23168

Telephone: (Business)(757) 564-2141 (Mobile)(757) 592-7264

8. Name, address and telephone number of all occupied dwellings that would be affected in the event of a dam failure, and/or inundation mapping of affected areas.

Name	Address	Telephone Number
None		

9. Name, address and telephone numbers of owners of all commercial or recreational establishments that would be affected in the event of dam failure, and/or an inundation mapping of affected areas.

Name	Address	Telephone Number
None		

10. Name, address and telephone number of owners of property, land and unoccupied buildings that would be affected in the event of a dam failure, and/or an inundation mapping of the affected area.

Name	Address	Telephone Number
See Inundation area map included		

11. If there are public roads downstream from the impounding structure, identify by highway number and distance below dam:

Route # 612, 1.0 Miles; Route # _____, _____Miles;
Route # _____, _____Miles; Route # _____, _____Miles.

Provide name of resident engineer, VA Dept. of Transportation, (or City/County engineer)

James W. Brewer

Address: Williamsburg Residency, 4451 Ironbound Rd, Williamsburg, VA 23188

Telephone: (Business)(757) 253-5140 (Residential)(_____)_____

NOTE: Items 12 and 13 should be provided from the Operation and Maintenance Application.

Definitions:
Stage I Condition – A flood watch, or heavy continuous rain or excessive flow of water from ice or snow melt.

Stage II Condition – A flood warning; or emergency spillway activated or dam overtopping/ breach may be possible.

Stage III Condition – Emergency spillway activated, dam overtopping or imminent failure is probable.

12. Amount of rainfall that will initiate a:

Stage II Condition	_____	inches per 6 hrs.
	_____	inches per 12 hrs.
	6	inches per 24 hrs.
Stage III Condition	_____	inches per 6 hrs.
	_____	inches per 12 hrs.
	8	inches per 24 hrs.

And/or the amount of flow in the emergency spillway that will initiate a:

Stage II Condition	4.8	feet (depth of flow)
Stage III Condition	6.8	feet (depth of flow)

Total depth of emergency spillway available before crest of dam is overtopped:
6.8 feet.

13. Frequency of observations by rainfall/staff gage observer during a:
Stage I Condition hourly Stage II every 30 minutes
Stage III continuous (recommend continuous)
Please identify access route and means of travel during flood conditions.
Along State Route 612 away from the dam and District Sports Park site.
Note: It is recommended that the Observer remain on post until pool elevation starts to recede.

14. Surveillance and Notification
    a. The dam owner/operator **IS RESPONSIBLE** for notifying local government of any problem or potential problem at the dam site.
    b. The dam owner/operator **WILL INITIATE** dam surveillance under Stage I conditions, ie, when a flood watch is issued.
    c. The dam owner/operator **WILL NOTIFY** the 24-hour dispatch center and the local Emergency Services Coordinator when Stage II conditions are met in order to alert them to review actions that may be required for the safety and protection of people and property.
    d. The dam owner/operator **WILL NOTIFY** the 24-hour dispatch center and the local Emergency Services Coordinator to initiate warning of residents when Stage III conditions or imminent dam failure are probable.

e. The owner/operator **WILL BE RESPONSIBLE** for operating such devices as spillway gates and low level outlets such as to cause the dam to function effectively. Attach narrative if required.

f. 24-hour dispatch center should prepare Standard Operating Procedures (SOP's) to implement dam overtopping/failure evacuation plans.

15. Evacuation Procedures:
Note: The dam owner/operator should notify the City/County 24-hour Dispatch Center, as required in paragraph 14d above. Phone # should be listed in [a (1)].

Note: Once the local government has been notified of any problem at a dam site, it should take appropriate protective measures in accordance with the local Emergency Operations Plan and accompanying Emergency Action Plan and Standing Operations Procedures. Other local government actions might include:

(1) Notify the individuals who are directly downstream and in immediate danger. A list of the names, addresses, and telephone numbers of these individuals should be listed in [a (2]).
(2) Monitoring the situation and, if time permits, review of evacuation plans.
(3) Begin Alert, Notification, and Warning
(4) Immediately evacuating the inundation areas, if conditions warrant.
(5) Expanding Direction and Control as well as beginning Emergency Public Information and operating shelters.
(6) Provide Situation Reports to the State Emergency Operations Center (804-674-2400 or 800-468-8892)

a. Once the local government has been notified of a condition requiring evacuation, the dam owner/operator and local government are mutually responsible for effecting evacuation.

(1) The dam owner/operator will: Notify the 24-hour dispatch center as required in paragraph 14, provide surveillance and notification

(2) Local government will: Take appropriate protective measures in accordance with the local Emergency Operations Plan and accompanying Emergency Action Plan

Individuals who are directly downstream and in immediate danger include:

NAME	ADDRESS	TELEPHONE
None		

b. Methods for notification and warning to evacuate include:
Check appropriate method(s)

_____ (1) Telephone
_____ (2) Police/fire/sheriff radio dispatch vehicles with loudspeakers, bullhorns, etc.
_____ (3) Personal runners for door-to-door alerting
__X__ (4) Radio/television broadcasts for area involved

16. Certification of Coordination between Owner/Operator and Local Government

Certification by Owner/Operator

I certify that procedures for implementation of this plan have been coordinated with James City County and the local Emergency Services Coordinator. Also, that a copy of this Form has been filed with the State Department of Emergency Management; that this plan shall be adhered to during the life of the project; and that the information contained herein is current and correct to the best of my knowledge.

_____
(Signature of Owner/Operator)

This 1st day of June 2006.

Printed Name Steven W. Hicks

Certification by Local Government

I certify that procedures for the warning and evacuation of James City County residents as required in the event of actual or impending failure of the Western Pond (PC105) Dam have been coordinated with the dam owner/operator.

_____
(Signature of City/County Official)

This 1st day of June, 2006.

Printed Name Steven W Hicks

Position General Services Manager

Please fill out and mail to:

Virginia Department of Emergency Management
Emergency Services
10501 Trade Ct.
Richmond, Virginia 23236-3713

Dept. of Conservation and Recreation
Division of Dam Safety
203 Governor Street
Richmond, Virginia 23219-2094

EMERGENCY ACTION PLAN WORK/DATA SHEET

1. Name of Impounding Structure: Western Pond (PC 105) Dam

2. Inventory #: 09528 Other Name (if any): _____

3. Total Height: 19 feet (Measured vertically from top of structure to streambed at downstream toe).

4. Total Impoundment Capacity at top of structure: 95 acre-feet.

5. Size Classification (Circle one): Large Medium (Small)

6. Hazard Classification (Circle one): Class I Class II (Class III)

7. Spillway Design (Circle one): PMF ½ PMF (100-YR) 50-YR

8. Downstream Inundation Area determined by (Mark one):

   _____ (1) Judgement

   _____ (2) Empirical Formulas Type used: _____

   X (3) Computer Programs Type used: HEC-1 & HEC-RAS

9. Critical Conditions used for structure failure (Mark one):

   X (1) Failure due to overtopping using:

   _____ PMF

   _____ % PMF

   X 100-YR

   _____ Other

   _____ (2) Failure not due to flooding

   Describe: _____

Department of Conservation & Recreation
CONSERVING VIRGINIA'S NATURAL & RECREATIONAL RESOURCES

OPERATION AND MAINTENANCE APPLICATION
CLASS I, II AND III IMPOUNDING STRUCTURES

Reference: Impounding Structures Regulations, 4VAC 50-20-00 et seq., Virginia Soil and Water Conservation Board

1. Name of Impounding Structure: Western Pond (PC 105) Dam

   Inventory Number: 09528 Other Name (if any) _____

2. Hazard Potential Classification from Table 1, Impounding Structure Regulations:

   (Circle One) Class I Class II (Class III)

3. Name of Owner: James City County

   Address: 101 Mounts Bay Road, Williamsburg Virginia 23187-8784

   Telephone: (Business) (757) 253-6671 (Residential) (___) _____

4. Operating Plan and Schedule.
   Provide a narrative for each item:

   a. Operation of control gates and spillways. No gates present at the dam site. The spillway is to be kept clear of debris at all times to ensure proper conveyance of the storm design flows.

   b. Operation of Reservoir Drain (not to exceed ½ foot drawdown per day on embankment dams). No low level drain installed in dam. Lake to be lowered by pumping or siphoning.

5. Maintenance Plan and Schedule
   Provide a narrative for each item:

   a. Embankment Dams:

      (1) embankment: shall be examined a minimum of twice each year. Once in the spring and once in the fall to ensure proper vegetative cover. Any trees growing on or within 25 feet of the embankment should be removed and the area regraded and seeded. The embankment should be seeded and fertilized at a minimum once every 2 years.

      (2) principal spillway: shall be examined by the owner once every three months for signs of concrete cracking, spalling, settling or deterioration. Debris shall be removed immediately upon discovery as necessary.

      (3) emergency spillway: The emergency spillway area shall be maintained in a like manner as the embankment area. Any trees growing within the emergency spillway area shall be removed and the area regraded and seeded. The emergency spillway area shall be examined after any rainfall event that produces sufficient flow to engage the spillway.

      (4) low level outlet: not-applicable

      (5) reservoir area: debris shall be removed from the lake perimeter and surface area as necessary.

      (6) downstream channel: shall be maintained in its present natural condition.

      (7) other: _____

   b. Concrete dams (including masonry and others): **Not Applicable**

6. Inspection schedule (attach schedule and checklist):

   (1) operator inspection (daily, weekly, etc.) once each month by dam owner or owners agent.

   (2) maintenance inspection (monthly, quarterly, semi-annual, annual) annually by dam owner or owners agent.

   (3) technical safety reinspection by a professional engineer. (required for certification update: Class I dams every two years, Class II dams every three years. All dams inspected after overtopping). Once every 6 years by a licensed Professional Engineer, after a significant rainfall event as outlined by the Emergency Action Plan or more often as necessary.

7. Emergency Action Plan Schedule.

   Provide the information that initiates the Emergency Action Plan:

   a. rainfall amounts and/or: 6 inches of rainfall within a 24 hour period.

   b. spillway flows: 4.8 feet depth of flow within the spillway

   c. frequency of observation: every 30 minutes

8. For a newly constructed impounding structure, provide certification from a Professional Engineer who has inspected the impounding structure during construction that, to the best of the engineer's judgment, knowledge and belief, the impounding structure and all appurtenances have been constructed in conformance with the plans, specifications and drawings submitted to the Department of Conservation and Recreation.

OPERATION AND MAINTENANCE PERMIT APPLICATION

OPERATION AND MAINTENANCE SCHEDULES
CERTIFICATION BY OWNER

I hereby certify that the operation and maintenance plans and schedules provided herewith will be adhered to during the life of the project except in cases of unanticipated emergency requiring departure therefrom in order to mitigate hazards to life and property, at which time my engineer and the Department of Conservation and Recreation will be notified.

Signed: _____
(Owner)

This 1st day of June, 2006.

CERTIFICATE BY OWNER'S ENGINEER

I hereby certify that the information provided in this form has been examined by me and found in my professional judgment to be appropriate to operation and maintenance considerations for this dam.

Signed: _____ Virginia Number: 033586
Professional Engineer

This 4th day of May, 2006.

Remarks: None

COMMONWEALTH OF VIRGINIA
MICHAEL L. CLAUD
No. 033586
4/7/2006
PROFESSIONAL ENGINEER

Please fill out and mail this form to:
Department of Conservation and Recreation
Division of Dam Safety
203 Governor Street
Richmond, Virginia 23219-2094

Home of America's 400th Anniversary
James City County 1607-2007 Jamestown

STORMWATER DIVISION

287 McLaws Circle, Suite 1, Williamsburg, Virginia 23185-5649
(757) 259-1460

E-mail: stormwater@james-city.va.us
Fax: (757) 259-5833

November 16, 2009

Mr. Steve Snell
Department of Conservation and Recreation
Dam Safety and Floodplain Management
203 Governor Street, Suite 210
Richmond, VA 23219-2094

RE: Annual Inspection Reports for James City County Dams

Dear Mr. Snell:

Attached are Annual Inspection Reports for two dams owned by James City County. The two dams are the Eastern Pond Dam at Warhill District Park (PC105), Inventory Number 09529; and the Western Pond Dam at Warhill District Park (PC106), Inventory Number 09528.

You can contact me at 757-259-1442 if you have any questions about the reports or need additional information.

Sincerely,

Darryl E. Cook, P.E.
County Engineer

Virginia Department of Conservation & Recreation

State Parks • Soil & Water Conservation • Natural Heritage
Chesapeake Bay Local Assistance • Land Conservation
Outdoor Recreation Planning • Dam Safety & Floodplains

Date Prepared: November 10, 2009
Prepared By: Darryl Cook

ANNUAL INSPECTION REPORT FOR VIRGINIA REGULATED IMPOUNDING STRUCTURES

Reference: Impounding Structures Regulations, 4VAC 50-20-10 et seq., including 4VAC 50-20-105, Virginia Soil and Water Conservation Board

Owner's Information

Name of Dam: Western Pond Dam - Warhill District Park (PC105)
Inventory Number: 09528
Owner's Name: James City County
Location-County/City: James City County
Contact Person (if different from above): Darryl Cook - County Engineer, James City County
Owner's Address: 287 McLaws Circle, Suite 1, Williamsburg, Va 23185
Hazard Classification: Low
Name of reservoir: Western Pond - Warhill District Park
Purpose of reservoir: Stormwater management, recreation
Telephone No.: (Residential) (Business) 757-259-1442
Other means of communication: email - decook@james-city.va.us

Owner's Engineer

Name of Engineering Firm and Engineer:
Professional Engineer Virginia License Number:
Mailing Address:

Telephone No.: (Business)

Directions: Make note of all pertinent conditions and changes since the last inspection, or, if this is the first inspection, since the filing of a design report.

Date of This Inspection 11/10/2009
Date of Last Inspection Unknown

1. EMBANKMENT
   a. Any alteration made to the embankment? None
   b. Erosion on embankment? No erosion found at time of inspection
   c. Settlement, misalignment or cracks in embankment? No settlement found at time of inspection
   d. Seepage? If so, seepage flow rate and location (describe any turbidity and observed color within the flow): No seepage found at time of inspection

2. UPSTREAM SLOPE
   a. Woody vegetation discovered? Yes - three small trees on the left side of the dam at the water's edge near the emergency spillway.
   b. Rodent burrows discovered? None observed at time of inspection.
   c. Remedial work performed? No, but continue to perform routine maintenance (mowing, trash removal) at least twice per year.

3. INTAKE STRUCTURE
   a. Deterioration of concrete? No - spillway structure is only 3 years old.
   b. Exposure of rebar reinforcement? None
   c. Is there a need to repair or replace the trash rack? No
   d. Any problems with debris? None
   e. Was the drawdown valve operated? N/A - there are no low level drains for the dam.

4. **ABUTMENT CONTACTS**

a. Any seepage? If so, estimate the flow rate and describe the location of the seep or damp areas (describe any turbidity and observed color within the flow):

None observed at time of inspection.

5. **EARTHEN EMERGENCY SPILLWAY**

a. Obstructions to flow? If so, describe plans to correct: None observed at time of inspection.

b. Rodent burrows discovered? None observed at time of inspection.

c. Any deterioration in the approach or discharge channel? None observed

6. **CONCRETE ~~EMERGENCY~~ SPILLWAY ****

a. Deterioration of concrete? None observed at time of inspection.

b. Exposed steel reinforcement? None observed at time of inspection.

c. Any leakage below concrete spillway? None observed at time of inspection.

d. Obstructions to flow? If so, lists plans to correct: None. **Note that the principal spillway consists of a pipe that outlets into a concrete flume.

7. **DOWNSTREAM SLOPE**

a. Woody vegetation discovered? None observed at time of inspection.

b. Rodent burrows discovered? None observed at time of inspection.

c. Are seepage drains flowing? Not able to observe - end of drains located beneath riprap and submerged in the plunge pool.

d. Any seepage or wet areas? None observed at time of inspection.

8. **OUTLET PIPE**

a. Any water flowing outside of discharge pipe through the Impounding Structure? None observed at time of inspection.

b. Describe any deflection or damage to the pipe: None observed at time of inspection.

9. **STILLING BASIN**

a. Deterioration of concrete structures? None observed at time of inspection.

b. Exposure of rebar reinforcement? None observed at time of inspection.

c. Deterioration of the basin slopes? None observed at time of inspection.

d. Repairs made? None observed at time of inspection.

e. Any obstruction to flow? None observed at time of inspection.

10. **GATES**

a. Gate malfunctions or repairs? There are no gates or low level drains for this dam.

b. Corrosion or damage? N/A

c. Were any gates operated? If so, how often and to what extreme? N/A

11. **RESERVOIR/WATERSHED**

a. New developments upstream of dam? None since improvements were made to the dam in 2006.

b. Slides or erosion of lake banks around the rim? None observed at time of inspection.

c. General comments to include silt, algae or other influence factors: The reservoir is in good condition with no trash or debris - has good water clarity.

12. INSTRUMENTS

a. List all instruments None

b. Any readings of instruments? N/A

c. Any installation of new instruments? None

13. DOWNSTREAM/HAZARD ISSUES

a. New development in downstream inundation zone? No - downstream area is a wooded floodplain that is directly upstream of another impoundment.

b. Note the maximum storm water discharge or peak elevation during the previous year. Unknown

c. Was general maintenance performed on dam? If so, when? Yes - based on the condition of the dam, it receives maintenance several time a year.

d. List actions that need to be accomplished before the next inspection: The dam embankment needs to be mowed at least twice per year. The principal and emergency spillways need to be kept free of trash and debris. Three small trees (6 - 10 feet tall) at the waterline near the emergency need to be removed.

14. OVERALL EVAULATION OF IMPOUNDING STRUCTURE AND APPURTENANCES

(Check one) ☒ EXCELLENT ☐ GOOD ☐ POOR

General Comments: The dam is generally in excellent condition with good vegetation and no signs of erosion or seepage. The dam was altered about three years ago (2006) to meet dam safety requirements. The dam has received regular, routine maintenance since that time and it will continue to do so given it location in a county park.

Recommendations:

The dam embankment needs to be mowed at least twice per year. The principal and emergency spillways need to be kept free of trash and debris. Three small trees (6 - 10 feet tall) at the waterline near the emergency need to be removed.

CERTIFICATION BY OWNER'S ENGINEER (required only when an inspection by an engineer is required)

I hereby certify that the information provided in this report has been examined by me and found to be true and correct in my professional judgment.

Signed: _____ Virginia Number: _____

Professional Engineer's Signature Print Name

This _____ day of _____ , 20 ____ .

Engineer's Virginia Seal:

CERTIFICATION BY OWNER

I hereby certify that the information provided in this report has been examined by me.

Signed: Daryl E Cook DARRYL E. COOK

Owner's Signature Print Name

This 16th day of November , 20 09 .

Mail the executed form to the appropriate
Department of Conservation and Recreation
Division of Dam Safety and Floodplain Management
Regional Engineer

Virginia Department of Conservation & Recreation

State Parks • Soil & Water Conservation • Natural Heritage
Chesapeake Bay Local Assistance • Land Conservation
Outdoor Recreation Planning • Dam Safety & Floodplains

Date Prepared: November 10, 2009
Prepared By: Darryl Cook

ANNUAL INSPECTION REPORT FOR VIRGINIA REGULATED IMPOUNDING STRUCTURES

Reference: Impounding Structures Regulations, 4VAC 50-20-10 et seq., including 4VAC 50-20-105, Virginia Soil and Water Conservation Board

Owner's Information

Name of Dam: Western Pond Dam - Warhill District Park (PC105)
Inventory Number: 09528
Owner's Name: James City County
Location-County/City: James City County
Contact Person (if different from above): Darryl Cook - County Engineer, James City County
Owner's Address: 287 McLaws Circle, Suite 1, Williamsburg, Va 23185
Hazard Classification: Low
Name of reservoir: Western Pond - Warhill District Park
Purpose of reservoir: Stormwater management, recreation
Telephone No.: (Residential) (Business) 757-259-1442
Other means of communication: email - decook@james-city.va.us

Owner's Engineer

Name of Engineering Firm and Engineer:
Professional Engineer Virginia License Number:
Mailing Address:

Telephone No.: (Business)

Directions: Make note of all pertinent conditions and changes since the last inspection, or, if this is the first inspection, since the filing of a design report.

Date of This Inspection 11/10/2009
Date of Last Inspection Unknown

1. **EMBANKMENT**
   a. Any alteration made to the embankment? None
   b. Erosion on embankment? No erosion found at time of inspection
   c. Settlement, misalignment or cracks in embankment? No settlement found at time of inspection
   d. Seepage? If so, seepage flow rate and location (describe any turbidity and observed color within the flow): No seepage found at time of inspection

2. **UPSTREAM SLOPE**
   a. Woody vegetation discovered? Yes - three small trees on the left side of the dam at the water's edge near the emergency spillway.
   b. Rodent burrows discovered? None observed at time of inspection.
   c. Remedial work performed? No, but continue to perform routine maintenance (mowing, trash removal) at least twice per year.

3. **INTAKE STRUCTURE**
   a. Deterioration of concrete? No - spillway structure is only 3 years old.
   b. Exposure of rebar reinforcement? None
   c. Is there a need to repair or replace the trash rack? No
   d. Any problems with debris? None
   e. Was the drawdown valve operated? N/A - there are no low level drains for the dam.

4. **ABUTMENT CONTACTS**

a. Any seepage? If so, estimate the flow rate and describe the location of the seep or damp areas (describe any turbidity and observed color within the flow):

None observed at time of inspection.

5. **EARTHEN EMERGENCY SPILLWAY**

a. Obstructions to flow? If so, describe plans to correct: None observed at time of inspection.

b. Rodent burrows discovered? None observed at time of inspection.

c. Any deterioration in the approach or discharge channel?

6. **CONCRETE EMERGENCY SPILLWAY**

a. Deterioration of concrete? None observed at time of inspection.

b. Exposed steel reinforcement? None observed at time of inspection.

c. Any leakage below concrete spillway? None observed at time of inspection.

d. Obstructions to flow? If so, lists plans to correct: None. **Note that the principal spillway consists of a pipe that outlets into a concrete flume.

7. **DOWNSTREAM SLOPE**

a. Woody vegetation discovered? None observed at time of inspection.

b. Rodent burrows discovered? None observed at time of inspection.

c. Are seepage drains flowing? Not able to observe - end of drains located beneath riprap and submerged in the plunge pool.

d. Any seepage or wet areas? None observed at time of inspection.

8. **OUTLET PIPE**

a. Any water flowing outside of discharge pipe through the Impounding Structure? None observed at time of inspection.

b. Describe any deflection or damage to the pipe: None observed at time of inspection.

9. **STILLING BASIN**

a. Deterioration of concrete structures? None observed at time of inspection.

b. Exposure of rebar reinforcement? None observed at time of inspection.

c. Deterioration of the basin slopes? None observed at time of inspection.

d. Repairs made? None observed at time of inspection.

e. Any obstruction to flow? None observed at time of inspection.

10. **GATES**

a. Gate malfunctions or repairs? There are no gates or low level drains for this dam.

b. Corrosion or damage? N/A

c. Were any gates operated? If so, how often and to what extreme? N/A

11. **RESERVOIR/WATERSHED**

a. New developments upstream of dam? None since improvements were made to the dam in 2006.

b. Slides or erosion of lake banks around the rim? None observed at time of inspection.

c. General comments to include silt, algae or other influence factors: The reservoir is in good condition with no trash or debris - has good water clarity.

12. INSTRUMENTS

a. List all instruments None

b. Any readings of instruments? N/A

c. Any installation of new instruments? None

13. DOWNSTREAM/HAZARD ISSUES

a. New development in downstream inundation zone? No - downstream area is a wooded floodplain that is directly upstream of another impoundment.

b. Note the maximum storm water discharge or peak elevation during the previous year. Unknown

c. Was general maintenance performed on dam? If so, when? Yes - based on the condition of the dam, it receives maintenance several time a year.

d. List actions that need to be accomplished before the next inspection: The dam embankment needs to be mowed at least twice per year. The principal and emergency spillways need to be kept free of trash and debris. Three small trees (6 - 10 feet tall) at the waterline near the emergency need to be removed.

14. OVERALL EVAULATION OF IMPOUNDING STRUCTURE AND APPURTENANCES

(Check one) ☒ **EXCELLENT** ☐ **GOOD** ☐ **POOR**

General Comments: The dam is generally in excellent condition with good vegetation and no signs of erosion or seepage. The dam was altered about three years ago (2006) to meet dam safety requirements. The dam has received regular, routine maintenance since that time and it will continue to do so given it location in a county park.

Recommendations:

The dam embankment needs to be mowed at least twice per year. The principal and emergency spillways need to be kept free of trash and debris. Three small trees (6 - 10 feet tall) at the waterline near the emergency need to be removed.

W. Tayloe Murphy, Jr.
Secretary of Natural
Resources

Joseph H. Maroon
Director

COMMONWEALTH of VIRGINIA

DEPARTMENT OF CONSERVATION AND RECREATION

203 Governor Street, Suite 206
Richmond, Virginia 23219-2010
Phone: (804) 371-6095 Fax: (804) 786-1798

August 8, 2005

RECEIVED
AUG 11 2005
ENVIRONMENTAL
DIVISION

James City County
101 Mounts Bay Road
Williamsburg, VA 23187

RE: Western Pond Dam, Inventory No. 09528

Dear Sir or Madam:

The Alteration Permit Application for Western Pond Dam, Inventory No. 09528 and the required supporting documents have been reviewed for compliance with the provisions of the Code of Virginia, Dam Safety Act, (Section 10.1-604 et. seq.) and the regulations promulgated by the Virginia Soil and Water Conservation Board (Board). Based on this information, on July 21, 2005 the Board issued a two year (7/21/05-7/31/07) Alteration Permit. The Permit and other pertinent data are enclosed.

The referenced Alteration Permit only authorizes the dam alteration parameters contained in the plans and specifications dated June 28, 2005, prepared by Michael Claud, P.E. #033586. All other permits and/or licenses required by the federal, state or local governments are the responsibility of the owner. The Alteration Permit also requires that an engineer ensure there are sufficient on-site inspections during alteration activities and be able to certify that alteration conforms to the plans and specifications submitted and approved by the Board. Inspections are to be under the direction of a licensed, professional engineer for all critical alteration work (e.g. placement of earth fill, forming for concrete, pouring of concrete, etc.). Any needed changes to the Board approved plans and specifications during alteration are to be made under the engineer of record and submitted to the Department of Conservation and Recreation for review and approval by this office in advance of alteration activity.

Please direct all questions and plan and specification reviews/approvals to Robert E. Cooper, P.E., Dam Safety Engineer, Department of Conservation and Recreation, Dam Safety and Floodplain Management, 203 Governor Street, Suite 206, Richmond, VA 23219, telephone 804-786-1359, robert.cooper@dcr.virginia.gov.

Sincerely,

William G. Browning,
Director, Dam Safety & Floodplain Management

Enclosures:

CC: James M. Robinson, P.E., Dam Safety Program Manager
Robert E. Cooper, P.E.

DATA SHEET – ALTERATION PERMIT
Department of Conservation & Recreation
Division of Dam Safety and Floodplain Management
203 Governor Street, Suite 206
Richmond, VA 23219

Name of Dam: **Western Pond**	Inventory Number: **09528**
Location: **Trib. To Longhill Swamp Creek**	City/County: **JAMES CITY COUNTY**
Owner: **James City County** Address: **101 Mounts Bay Road** City/Town/Zip: **Williamsburg VA 23187**	Designed by: Constructed by: Year Constructed (Modified):
Type of Dam: **Earth**	Purpose: **Stormwater Management**
Drainage Area (Sq. Mi.): **0.154**	Type of Watershed: **Forested**
Total Height (Ft.): **15**	Elevation: **61**
Normal Pool Height (Ft.): **12**	Elevation: **58**
Maximum Capacity (Acre Ft.): **67**	Maximum Area (Acres): **9**
Normal Capacity (Acre Ft.): **45**	Normal Area (Acres): **7.2**
Size Classification: **Small**	Hazard Classification: **III**
Required Spillway Design Flood: **100 YR**	Available Spillway Design Flood: **100 YR**
Type of Spillway: **Grass**	*(Note if Section 130):*

Operation and Maintenance Plans & Schedule by: **N/A**

Design Report by: **Timmons Group/Micheal Claud VA PE #033586**

Emergency Action Plan filed with:
( ) Virginia Dept. of Emergency Management
( ) Local Coordinator of Emergency Services City/County:

Application Reviewed and Recommended for **Two Year Alteration Permit (7/21/2005-7/31/2007). The permit is being issued to improve the principal and emergency spillway capacities, raise the dam height, and clear and re-grade dam embankment. This construction is being performed because of development occurring upstream of this facility.**

If Conditional Certificate, the conditions are:

By: **Robert E. Cooper, PE VA #0402 025273** Date: **July 20, 2005**

Concurrence with the Recommendation:

By: **William G. Browning, Director** Date: 7/20/05

COMMONWEALTH *of* VIRGINIA

DEPARTMENT OF CONSERVATION AND RECREATION
DIVISION OF DAM SAFETY
VIRGINIA SOIL AND WATER CONSERVATION BOARD

DAM SAFETY PROGRAM
ALTERATION PERMIT NUMBER 09528

This permit entitles James City County to alter Western Pond Dam in James City County pursuant to the provisions of the Dam Safety Act (Section 10.1-604 et seq., Code of Virginia) and the Virginia Soil and Water Conservation Board (Board) Regulations promulgated thereunder and other requirements of the Board.

The permit is issued to make the improvements listed on the Alteration Permit datasheet dated July 20, 2005 and is effective July 21, 2005 and expires July 31, 2007.

Joseph H. Maroon
Secretary, Virginia Soil and
Water Conservation Board

Scott Thomas

From: Andrew Gould [Andrew.Gould@timmons.com]
Sent: Thursday, September 28, 2006 1:36 PM
To: Wayland Bass; Scott Thomas
Cc: Andy Curtis; RNice@GNiceandSons.com; Mike Claud
Subject: West Pond Dam Spillay Modifications
Attachments: 2400_001.pdf

Wayland and Scott - Here is a concept sketch for modifications to the outfall channel for the west pond dam.

I have not attached any calculations yet - I need to take a few measurements of the as-built condition before I am comfortable providing supporting calculations. I plan on taking the necessary field measurements either before or after our team meeting on Monday. I will finalize the design once I have the additional information.

Please call me or e-mail me if you have any questions. I will be attending the team meeting on Monday if you would like to discuss further then.

Thanks

Drew

TIMMONS GROUP
YOUR VISION ACHIEVED THROUGH OURS.
Drew Gould, P.E.
1001 Boulders Parkway
Suite 300
Richmond, VA 23225
Tel: 804.200.6412
Fax: 804.560.1438
Cell: 804.334.9284
E-mail: andrew.gould@timmons.com
www.timmons.com

From: dt-canon [mailto:dt-canon]
Sent: Thursday, September 28, 2006 1:16 PM
To: Andrew Gould
Subject: Attached Image

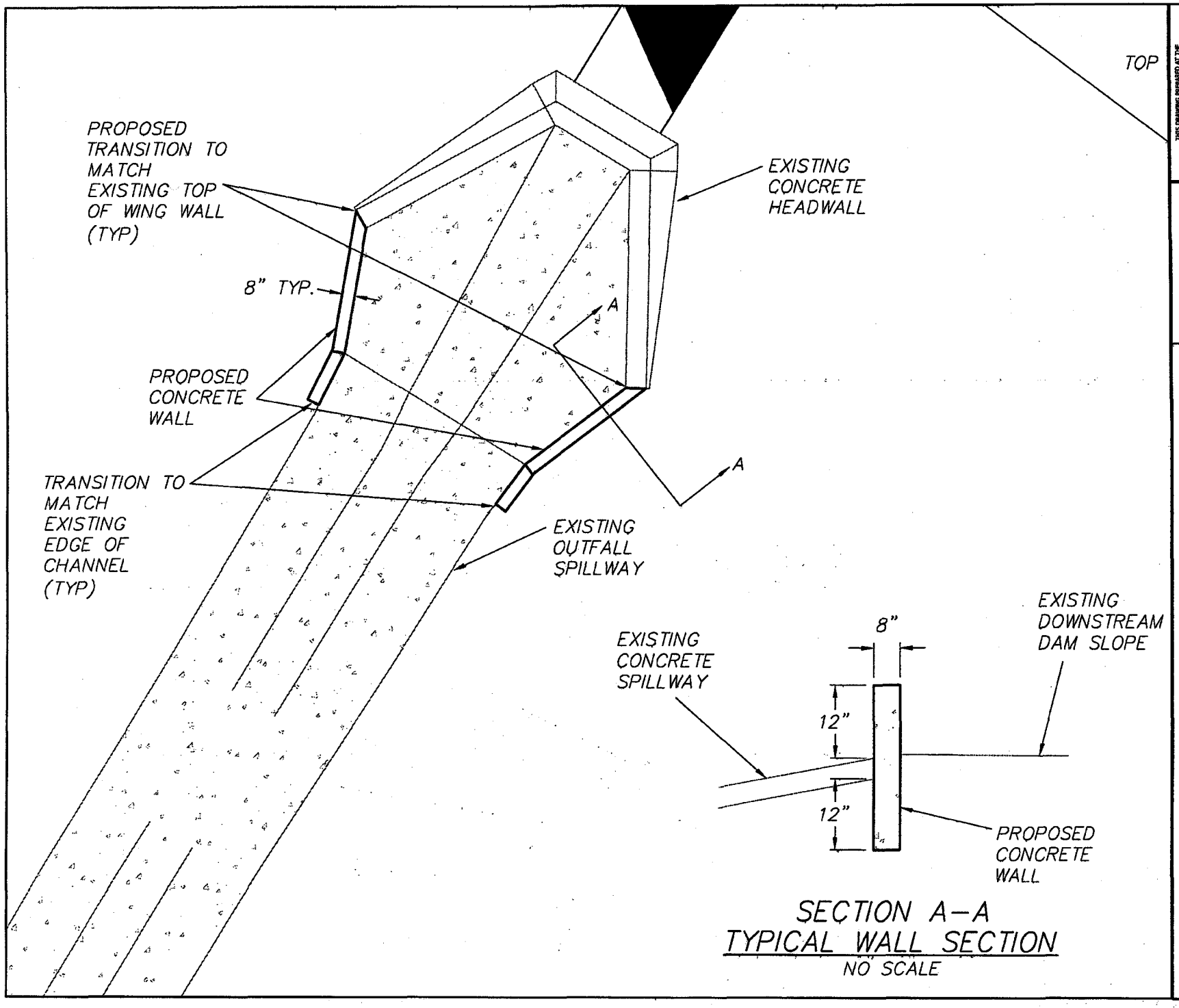

THIS DRAWING PREPARED AT THE CORPORATE OFFICE
1001 Boulders Parkway, Suite 300 | Richmond, VA 23225
TEL 804.200.6500 FAX 804.560.1016 www.timmons.com

YOUR VISION ACHIEVED THROUGH OURS.

Site Development | Residential | Infrastructure | Technology

REVISION DESCRIPTION	DATE

TIMMONS GROUP

DATE	9/21/2006
DRAWN BY	M. CLAUD
DESIGNED BY	M. CLAUD
CHECKED BY	
SCALE	1"=5'

WARHILL SITE WESTERN POND (PC105) DAM RENOVATIONS
JAMES CITY COUNTY, VIRGINIA
PRINCIPAL OUTFALL SPILLWAY MODIFICATIONS

JOB NO. 22303

SHEET NO. REV-4

These plans and associated documents are the exclusive property of TIMMONS GROUP and may not be reproduced in whole or in part and shall not be used for any purpose whatsoever, inclusive, but not limited to construction, bidding, and/or construction staking without the express written consent of TIMMONS GROUP.

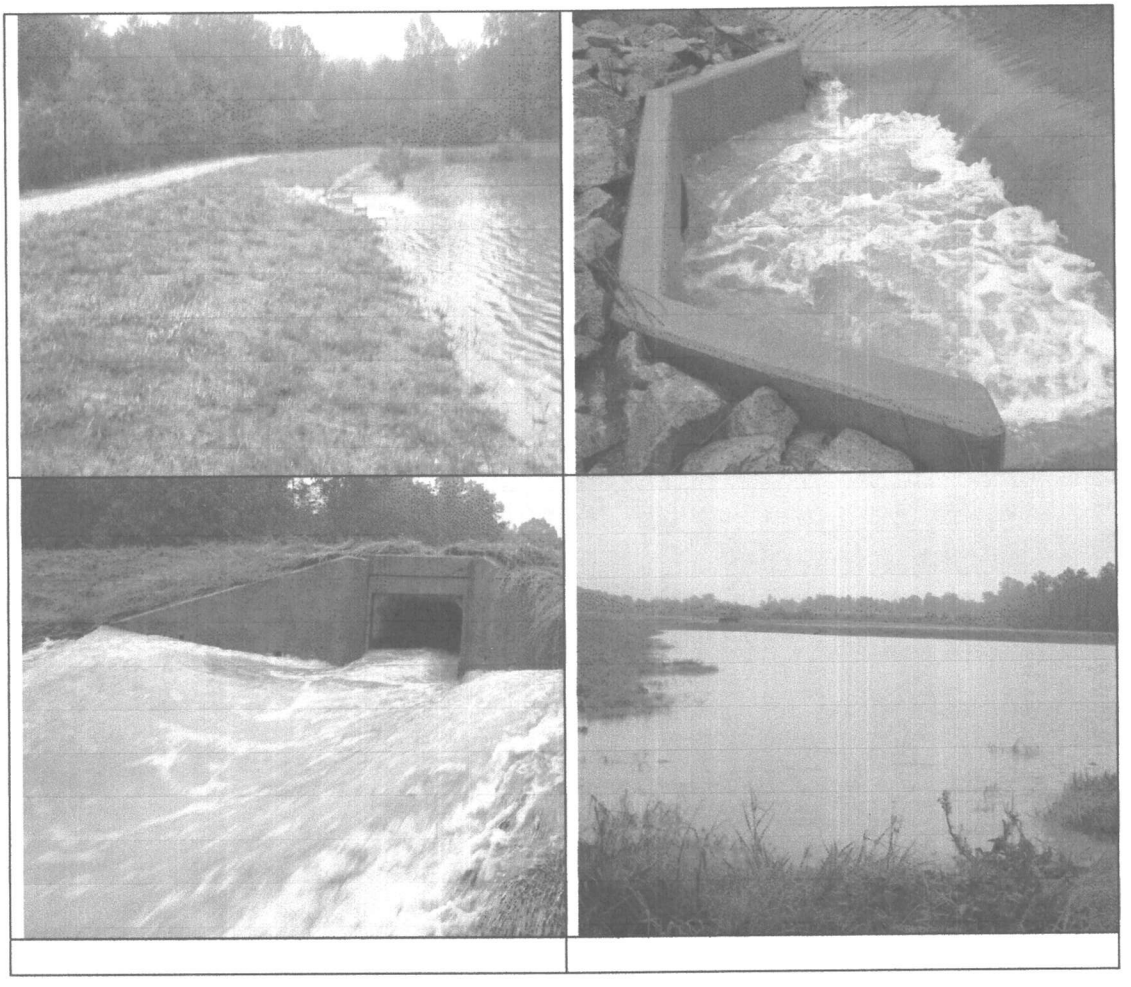

Scott Thomas

From: Mike Claud [Mike.Claud@timmons.com]
Sent: Thursday, October 12, 2006 10:26 AM
To: Wayland Bass
Cc: Scott Thomas; Andrew Gould
Subject: Western Pond Dam Spillway Modifications
Attachments: 2497_001.pdf

Wayland,

Attached is a copy of our calculations for the Western Pond Dam outfall spillway. The cross section analysis was based on field spot shots taken of the concrete channel (the graphic shows the approximate cross section locations). We routed the full 100-year flows through these 2 cross sections in order to take a conservative look at the channel capacity. The results indicate the proposed wall extensions should provide plenty of freeboard during storm events. We also routed the storm flow measurement information provided by the County. A copy of this routing is included with the attachment. The routing indicated the storm event was close to what was originally calculated for the 100-year storm event. We cannot account for why this storm event did not reach a level to engage the emergency spillway. It is possible there is more storage capacity within the pond than originally calculated from the County GIS data. Please keep in mind that this storm event occurred over a longer duration than what is typically used in hydrologic models.

We are working with the contractor to get the spillway modifications completed. Please feel free to contact either Drew or I if you have any questions or need any additional information.

thanks,

Michael L. Claud, P.E.
Timmons Group
YOUR VISION ACHIEVED THROUGH OURS
1001 Boulders Parkway, Suite 300
Richmond, Virginia 23225
Phone: (804) 200-6413
Fax: (804) 560-1438
Email: mike.claud@timmons.com
Web: www.timmons.com

W. Tayloe Murphy, Jr.
Secretary of Natural Resources

Joseph H. Maroon
Director

COMMONWEALTH of VIRGINIA

DEPARTMENT OF CONSERVATION AND RECREATION

203 Governor Street, Suite 206
Richmond, Virginia 23219-2010
Phone: (804) 371-6095 Fax: (804) 786-1798

August 12, 2005

RECEIVED
AUG 17 2005
ENVIRONMENTAL DIVISION

James City County
101 Mounts Bay Road
Williamsburg, VA 23187

RE: Western Pond Dam, Inventory Number 09528

Dear Sir or Madam:

The Operation and Maintenance Certificate Application for Western Pond Dam, Inventory Number 09528 and the required supporting documents have been reviewed for compliance with the provisions of the Code of Virginia, Dam Safety Act, (Section 10.1-604 et. seq.) and the regulations promulgated by the Virginia Soil and Water Conservation Board (Board). Based on this information, on July 21, 2005 the Board issued a two year (7/21/05 – 7/31/07) Conditional Class III Operation and Maintenance Certificate. The Certificate and other pertinent data are enclosed.

The Dam Safety Act requires dam owners to maintain their dam in a condition to prevent unreasonable threats to life and property of others. The classification of your dam and the Certificate issued were based on the current known downstream hazard potential from upstream characteristics, a re-inspection/inventory/as-built report, operation and maintenance plan, inspection schedule and an emergency action plan. The Board issued a Conditional Operation and Maintenance Certificate because your dam does not meet the requirements of the Dam Safety Act and the Board's Regulations. The conditions that must be corrected to qualify for a Regular Operation and Maintenance Certificate are listed on the Data Sheet dated July 20, 2005.

Please direct your questions and documentation on the corrective measure taken to Robert E. Cooper, P.E., Dam Safety Engineer, Department of Conservation and Recreation, Dam Safety and Floodplain Management, 203 Governor Street, Suite 206, Richmond, VA 23219, telephone 804-786-1359, robert.cooper@dcr.virginia.gov.

Sincerely,

William G. Browning
Dam Safety & Floodplain Management Director

Enclosures:

CC: Members, Virginia Soil and Water Conservation Board
James M. Robinson, P. E., Dam Safety Program Manager
Robert E. Cooper, P. E.

COMMONWEALTH *of* VIRGINIA

DEPARTMENT OF CONSERVATION AND RECREATION
DIVISION OF DAM SAFETY
VIRGINIA SOIL AND WATER CONSERVATION BOARD

DAM SAFETY CERTIFICATE
CONDITIONAL
CLASS III OPERATION & MAINTENANCE CERTIFICATE NUMBER 09528

James City County, owner of Western Pond Dam in James City County, is entitled to operate and maintain this dam pursuant to the provisions of the Dam Safety Act (Section 10.1-604 et seq., Code of Virginia) and Regulations promulgated thereunder.

This Conditional Operation and Maintenance Certificate is issued because the dam does not satisfy the current Regulations. The conditions that must be corrected to qualify for a Regular Operation and Maintenance Certificate are listed on the Data Sheet dated July 20, 2005.

This certificate is for a term of two years, effective July 21, 2005 and expires July 31, 2007. The Certificate may be renewed in accordance § 4VAC50-20-150 C of the Virginia Impounding Regulations.

Joseph H. Maroon
Secretary, Virginia Soil and Water
Conservation Board

DATA SHEET - OPERATION AND MAINTENANCE CERTIFICATE
Department of Conservation & Recreation
Division of Dam Safety and Floodplain Management
203 Governor Street, Suite 206
Richmond, VA 23219

Name of Dam: **Western Pond**	Inventory Number: **09528**
Location: **Trib. To Longhill Swamp Creek**	City/County: **JAMES CITY COUNTY**
Owner: **James City County** Address: **101 Mounts Bay Road** City/Town/Zip: **Williamsburg VA 23187**	Designed by: Constructed by: Year Constructed (Modified):
Type of Dam: **Earth**	Purpose: **Stormwater Management**
Drainage Area (Sq. Mi.): **0.154**	Type of Watershed: **Forested**
Total Height (Ft.): **15**	Elevation: **61**
Normal Pool Height (Ft.): **12**	Elevation: **58**
Maximum Capacity (Acre Ft.): **67**	Maximum Area (Acres): **9**
Normal Capacity (Acre Ft.): **45**	Normal Area (Acres): **7.2**
Size Classification: **Small**	Hazard Classification: **III**
Required Spillway Design Flood: **100 YR**	Available Spillway Design Flood: **100 YR**
Type of Spillway: **Grass**	*(Note if Section 130):*

Operation and Maintenance Plans & Schedule by: **Timmons Group/Micheal Claud VA PE #033586**

( ) Reinspection or (X) Inventory Report by : **Timmons Group/Micheal Claud VA PE #033586**

Emergency Action Plan filed with:
(X) Virginia Dept. of Emergency Management
(X) Local Coordinator of Emergency Services City/County: **JAMES CITY COUNTY**

Application Reviewed and Recommended for **Two year Conditional Operation and Maintenance Certificate (7/21/2005-7/31/07)**

If Conditional Certificate, the conditions are: **Presently the spillway is capable of passing the SDF, but does not provide any freeboard and trees are located on and within 25' of the dam. The dam is simultaneously being issued an alteration permit that will address these issues along with upgrades to the dam and spillway due to upstream watershed development.**

By: **Robert E. Cooper, PE VA #0402 025273** Date: **July 20, 2005**

Concurrence with the Recommendation:

By: **William G. Browning, Director** Date: 7/20/05

pc 105

W. Tayloe Murphy, Jr.
Secretary of Natural Resources

Joseph H. Maroon
Director

COMMONWEALTH of VIRGINIA

DEPARTMENT OF CONSERVATION AND RECREATION

203 Governor Street, Suite 206
Richmond, Virginia 23219-2010
Phone: (804) 371-6095 Fax: (804) 786-1798

August 8, 2005

RECEIVED
AUG 11 2005
ENVIRONMENTAL DIVISION

James City County
101 Mounts Bay Road
Williamsburg, VA 23187

RE: Western Pond Dam, Inventory No. 09528

Dear Sir or Madam:

The Alteration Permit Application for Western Pond Dam, Inventory No. 09528 and the required supporting documents have been reviewed for compliance with the provisions of the Code of Virginia, Dam Safety Act, (Section 10.1-604 et. seq.) and the regulations promulgated by the Virginia Soil and Water Conservation Board (Board). Based on this information, on July 21, 2005 the Board issued a two year (7/21/05-7/31/07) Alteration Permit. The Permit and other pertinent data are enclosed.

The referenced Alteration Permit only authorizes the dam alteration parameters contained in the plans and specifications dated June 28, 2005, prepared by Michael Claud, P.E. #033586. All other permits and/or licenses required by the federal, state or local governments are the responsibility of the owner. The Alteration Permit also requires that an engineer ensure there are sufficient on-site inspections during alteration activities and be able to certify that alteration conforms to the plans and specifications submitted and approved by the Board. Inspections are to be under the direction of a licensed, professional engineer for all critical alteration work (e.g. placement of earth fill, forming for concrete, pouring of concrete, etc.). Any needed changes to the Board approved plans and specifications during alteration are to be made under the engineer of record and submitted to the Department of Conservation and Recreation for review and approval by this office in advance of alteration activity.

Please direct all questions and plan and specification reviews/approvals to Robert E. Cooper, P.E., Dam Safety Engineer, Department of Conservation and Recreation, Dam Safety and Floodplain Management, 203 Governor Street, Suite 206, Richmond, VA 23219, telephone 804-786-1359, robert.cooper@dcr.virginia.gov.

Sincerely,

William G. Browning

William G. Browning,
Director, Dam Safety & Floodplain Management

Enclosures:

CC: James M. Robinson, P.E., Dam Safety Program Manager
Robert E. Cooper, P.E.

DATA SHEET – ALTERATION PERMIT
Department of Conservation & Recreation
Division of Dam Safety and Floodplain Management
203 Governor Street, Suite 206
Richmond, VA 23219

Name of Dam: **Western Pond**	Inventory Number: **09528**
Location: **Trib. To Longhill Swamp Creek**	City/County: **JAMES CITY COUNTY**
Owner: **James City County** Address: **101 Mounts Bay Road** City/Town/Zip: **Williamsburg VA 23187**	Designed by: Constructed by: Year Constructed (Modified):
Type of Dam: **Earth**	Purpose: **Stormwater Management**
Drainage Area (Sq. Mi.): **0.154**	Type of Watershed: **Forested**
Total Height (Ft.): **15**	Elevation: **61**
Normal Pool Height (Ft.): **12**	Elevation: **58**
Maximum Capacity (Acre Ft.): **67**	Maximum Area (Acres): **9**
Normal Capacity (Acre Ft.): **45**	Normal Area (Acres): **7.2**
Size Classification: **Small**	Hazard Classification: **III**
Required Spillway Design Flood: **100 YR**	Available Spillway Design Flood: **100 YR**
Type of Spillway: **Grass**	*(Note if Section 130):*

Operation and Maintenance Plans & Schedule by: **N/A**

Design Report by: **Timmons Group/Micheal Claud VA PE #033586**

Emergency Action Plan filed with:
( ) Virginia Dept. of Emergency Management
( ) Local Coordinator of Emergency Services City/County:

Application Reviewed and Recommended for **Two Year Alteration Permit (7/21/2005-7/31/2007). The permit is being issued to improve the principal and emergency spillway capacities, raise the dam height, and clear and re-grade dam embankment. This construction is being performed because of development occurring upstream of this facility.**

If Conditional Certificate, the conditions are:

By: **Robert E. Cooper, PE VA #0402 025273** Date: **July 20, 2005**

Concurrence with the Recommendation:

By: **William G. Browning, Director** Date: 7/20/05

COMMONWEALTH *of* VIRGINIA

DEPARTMENT OF CONSERVATION AND RECREATION
DIVISION OF DAM SAFETY
VIRGINIA SOIL AND WATER CONSERVATION BOARD

DAM SAFETY PROGRAM
ALTERATION PERMIT NUMBER 09528

This permit entitles James City County to alter Western Pond Dam in James City County pursuant to the provisions of the Dam Safety Act (Section 10.1-604 et seq., Code of Virginia) and the Virginia Soil and Water Conservation Board (Board) Regulations promulgated thereunder and other requirements of the Board.

The permit is issued to make the improvements listed on the Alteration Permit datasheet dated July 20, 2005 and is effective July 21, 2005 and expires July 31, 2007.

Joseph H. Maroon
Secretary, Virginia Soil and
Water Conservation Board

W. Tayloe Murphy, Jr.
Secretary of Natural Resources

Joseph H. Maroon
Director

COMMONWEALTH of VIRGINIA

DEPARTMENT OF CONSERVATION AND RECREATION

203 Governor Street, Suite 206
Richmond, Virginia 23219-2010
Phone: (804) 371-6095 Fax: (804) 786-1798

August 12, 2005

RECEIVED
AUG 17 2005
ENVIRONMENTAL DIVISION

James City County
101 Mounts Bay Road
Williamsburg, VA 23187

RE: Western Pond Dam, Inventory Number 09528

Dear Sir or Madam:

The Operation and Maintenance Certificate Application for Western Pond Dam, Inventory Number 09528 and the required supporting documents have been reviewed for compliance with the provisions of the Code of Virginia, Dam Safety Act, (Section 10.1-604 et. seq.) and the regulations promulgated by the Virginia Soil and Water Conservation Board (Board). Based on this information, on July 21, 2005 the Board issued a two year (7/21/05 – 7/31/07) Conditional Class III Operation and Maintenance Certificate. The Certificate and other pertinent data are enclosed.

The Dam Safety Act requires dam owners to maintain their dam in a condition to prevent unreasonable threats to life and property of others. The classification of your dam and the Certificate issued were based on the current known downstream hazard potential from upstream characteristics, a re-inspection/inventory/as-built report, operation and maintenance plan, inspection schedule and an emergency action plan. The Board issued a Conditional Operation and Maintenance Certificate because your dam does not meet the requirements of the Dam Safety Act and the Board's Regulations. The conditions that must be corrected to qualify for a Regular Operation and Maintenance Certificate are listed on the Data Sheet dated July 20, 2005.

Please direct your questions and documentation on the corrective measure taken to Robert E. Cooper, P.E., Dam Safety Engineer, Department of Conservation and Recreation, Dam Safety and Floodplain Management, 203 Governor Street, Suite 206, Richmond, VA 23219, telephone 804-786-1359, robert.cooper@dcr.virginia.gov.

Sincerely,

William G. Browning
Dam Safety & Floodplain Management Director

Enclosures:

CC: Members, Virginia Soil and Water Conservation Board
James M. Robinson, P. E., Dam Safety Program Manager
Robert E. Cooper, P. E.

COMMONWEALTH *of* VIRGINIA

DEPARTMENT OF CONSERVATION AND RECREATION
DIVISION OF DAM SAFETY
VIRGINIA SOIL AND WATER CONSERVATION BOARD

DAM SAFETY CERTIFICATE
CONDITIONAL
CLASS III OPERATION & MAINTENANCE CERTIFICATE NUMBER 09528

James City County, owner of Western Pond Dam in James City County, is entitled to operate and maintain this dam pursuant to the provisions of the Dam Safety Act (Section 10.1-604 et seq., Code of Virginia) and Regulations promulgated thereunder.

This Conditional Operation and Maintenance Certificate is issued because the dam does not satisfy the current Regulations. The conditions that must be corrected to qualify for a Regular Operation and Maintenance Certificate are listed on the Data Sheet dated July 20, 2005.

This certificate is for a term of two years, effective July 21, 2005 and expires July 31, 2007. The Certificate may be renewed in accordance § 4VAC50-20-150 C of the Virginia Impounding Regulations.

Joseph H. Maroon
Secretary, Virginia Soil and Water
Conservation Board

DATA SHEET - OPERATION AND MAINTENANCE CERTIFICATE
Department of Conservation & Recreation
Division of Dam Safety and Floodplain Management
203 Governor Street, Suite 206
Richmond, VA 23219

Name of Dam: **Western Pond**	Inventory Number: **09528**
Location: **Trib. To Longhill Swamp Creek**	City/County: **JAMES CITY COUNTY**
Owner: **James City County** Address: **101 Mounts Bay Road** City/Town/Zip: **Williamsburg VA 23187**	Designed by: Constructed by: Year Constructed (Modified):
Type of Dam: **Earth**	Purpose: **Stormwater Management**
Drainage Area (Sq. Mi.): **0.154**	Type of Watershed: **Forested**
Total Height (Ft.): **15**	Elevation: **61**
Normal Pool Height (Ft.): **12**	Elevation: **58**
Maximum Capacity (Acre Ft.): **67**	Maximum Area (Acres): **9**
Normal Capacity (Acre Ft.): **45**	Normal Area (Acres): **7.2**
Size Classification: **Small**	Hazard Classification: **III**
Required Spillway Design Flood: **100 YR**	Available Spillway Design Flood: **100 YR**
Type of Spillway: **Grass**	*(Note if Section 130):*

Operation and Maintenance Plans & Schedule by: **Timmons Group/Micheal Claud VA PE #033586**

( ) Reinspection or (X) Inventory Report by : **Timmons Group/Micheal Claud VA PE #033586**

Emergency Action Plan filed with:
(X) Virginia Dept. of Emergency Management
(X) Local Coordinator of Emergency Services City/County: **JAMES CITY COUNTY**

Application Reviewed and Recommended for **Two year Conditional Operation and Maintenance Certificate (7/21/2005-7/31/07)**

If Conditional Certificate, the conditions are: **Presently the spillway is capable of passing the SDF, but does not provide any freeboard and trees are located on and within 25' of the dam. The dam is simultaneously being issued an alteration permit that will address these issues along with upgrades to the dam and spillway due to upstream watershed development.**

By: **Robert E. Cooper, PE VA #0402 025273** Date: **July 20, 2005**

Concurrence with the Recommendation:

By: **William G. Browning, Director** Date: 7/20/05

AMERICAST®

RECEIVED
OCT 10 2005
BY:.....

Wednesday, September 28, 2005
George Nice & Sons, Inc.
143 Skimino Road
Williamsburg, VA 23188
Voz: (757) 565-2885
Fax: (757) 565-1526

102 07

District Park
West Point

Re: Americast Job D7079
Warhill Site
James City Co., VA
Str: RCB-4x4

ATTN:

Accompanying are submittal details for the above project (see Document List).
Please return one copy each with the engineer's comments or approval.

Please verify locations, directions and elevations. If needed, adjustments to meet field conditions to be performed in field, by others.

We understand that the 7'x 7' SWM Inlet/Outfall Box will be cast in place, by others. We intend to provide 6"± of exposed steel to facilitate the connection to the CIP.

Respectfully,

Thomas Lawrence, PE
Americast
tlawrence@AmericastUSA.Com

Document List

Drawings:

PD	RCB Project Data Double 4'x4' RCB.
LO	Layout Detail 36' Single 4'x4' RCB with 0° Skew and Precast Wing Walls.
Std	Standard Section Detail Single 4'x4'.
Pc 1	Outlet Detail Single 4'x4' RCB with 0° Skew and Precast Parapet.
Pc 5	Inlet Detail Single 4'x4' RCB with 0° Skew and Exposed Steel.
HW-ES	RCB Headwall and End Section Details.
Curtain	Cast In Place Curtain Wall.
BWW-L	4' Rise RCB Wing Wall 2:1 Slope, Type I, 45°L Wing Angle.
BWW-R	4' Rise RCB Wing Wall 2:1 Slope, Type I, 45°R Wing Angle.
BWW RS	RCB Wing Wall Reinforcement Section.
RS	RCB Reinforcement Section Single 4'x4' VDOT-ASTM C1433 Alt-I for 2'-5' Fill.
RD	RCB Reinforcement Detail Single 4'x4' VDOT-ASTM C1433 Alt-I for 2'-5' Fill.

Calculations:

S0404V205	Single 4'x4' RCB VDOT-ASTM 1433 Alt-I for 2'-5' Fill
BWW-21-4'-45°	RCB Wing Wall Design 2:1 Type I 45° Wing Angle.

Weights	Marking Instructions	STD Marking
Pc 1: 11,700 LBs 3 Stds: 16,000 LBs/Ea Pc 5: 11,800 LBs Pc LW1: 7,100 LBs Pc RW1: 7,100 LBs	Stencil all RCB Sections with information listed under STD Marking. Use Waterproof Paint. Plae label on inside & outside of sidewall. The word "TOP" shall be placed on the inside top surface.	GEORGE NICE & SONS WARHILL SITE JAMES CITY CO., VA VDOT-ASTM C1433 4'x4' RCB ALT-I 2'-5' FILL MANUFACTURE DATE ASHLAND PLT PC #

Shipping List – Piece Decriptions

Pc 1: Precast Headwall Parapet x Bell End Section.
Pc 2: Standard Section.
Pc 3: Standard Section.
Pc 4: Standard Section.
Pc 5: Spigot x Exposed Steel End Section

(20) Lifthole Plugs

LW1: BWW-21-4'-45°L RCB Wing Wall
RW1: BWW-21-4'-45°R RCB Wing Wall

Concrete Volumes

Pc 1: 2.691 CY RCB + 0.198 HW
3 Stds: 3.951 CY/Ea
Pc 5: 2.896 CY RCB

Pc LW1: 1.743 CY
Pc RW1: 1.743 CY

HANDLING INFORMATION

AMERICAST WILL FURNISH ONLY THE ITEMS LISTED BELOW FOR HANDLING AND ASSEMBLY OF THE PRECAST COMPONENTS. THESE ITEMS MUST BE RETURNED OR AN INVOICE WILL BE ISSUED.

(8) 1-1/4" DOUBLE SWIVEL LIFT PLATES
(4) 1-1/4" x 20" LONG COIL RODS
(4) 1/2" x 4" x 4" PLATE WASHERS
(12) 1-1/4" COIL NUTS
(4) 1-1/4" x 12" LONG COIL RODS
(2) 2 TON COME-A-LONGS

RCB Project Data
Single 4'x4' RCB.

AMERICAST®
A Division of VALLEY BLOX, Inc.

Harrisonburg Plant
210 Stone Spring Road
Harrisonburg, VA 22801
1-800-648-2278

Halltown Plant
PO Box 120
Halltown, WV 25423
1-800-648-4580

Ashland Plant
11352 Va. Precast Rd
Ashland, VA 23005
1-800-999-2278

			Date	By/Chk
For:	G Nice	Original:	09-28-2005	TL
Job:	Warhill Site James City Co., VA	Last Rev:		
		Scale:	0/0" = 1'-0"	
Str: RCB-4x4	Contract: D7079	Drw Num:	PD	

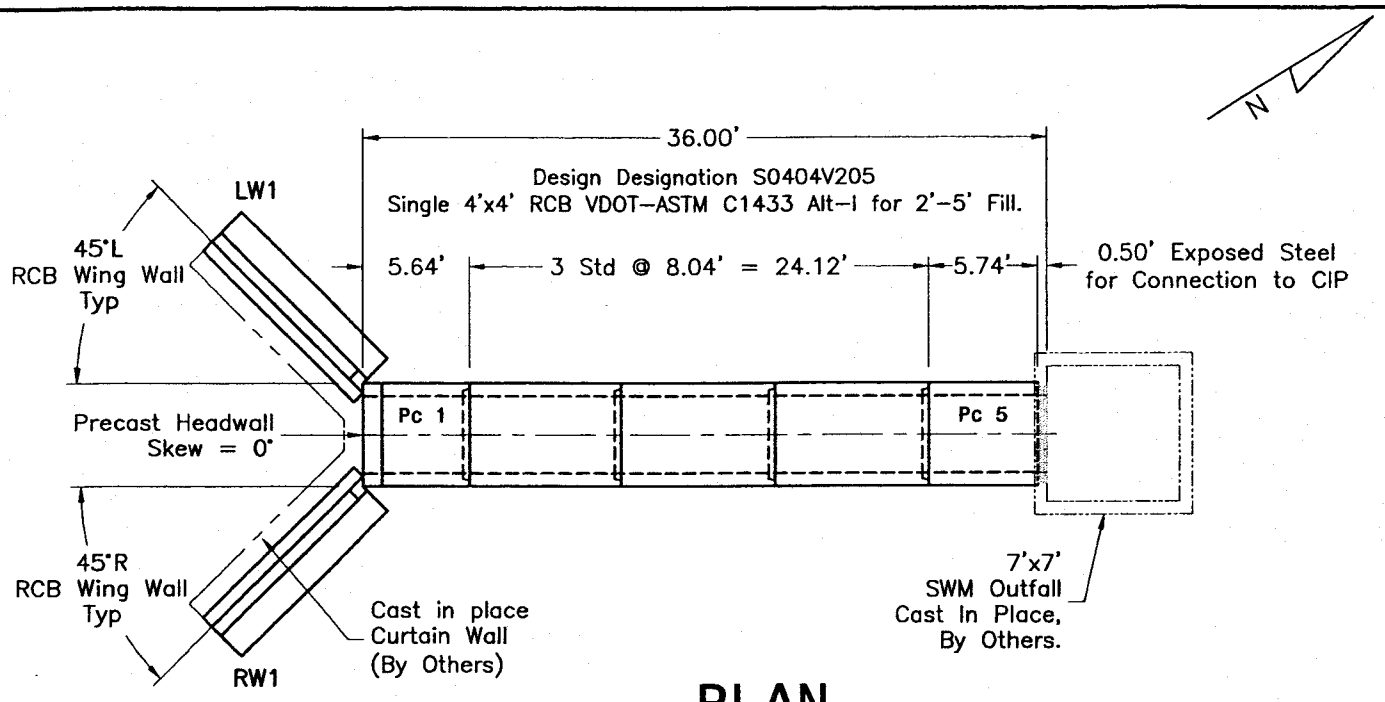

PLAN

LAY
Inv. Out = 57.00'

FLOW
Inv. In = 57.36'

Note:

1) RCB joints to be sealed in accordance with project plans and state specifications. 1"x1" Closed Cell Neoprene attached to RCB tongue shoulder at plant unless noted. All handling points must be sealed with elastomeric plugs and/or non-shink grout.

2) Installation criteria to be in accordance with AASHTO Division II Section 27 and state specifications. Bedding to be 6" aggregate minimum. Install RCB sections bells ahead upstream unless noted. Pull joints together to 1/2" average gap (-1/2", +1/4), 3/4" max. gap.

3) Adjoining cast in place concrete (by others), if any, to be in accordance with project plans and state specifications.

4) This drawing supplied only as a guide; adjustment to meet field conditions must be made, by others, as needed.

Seal for Precast Only

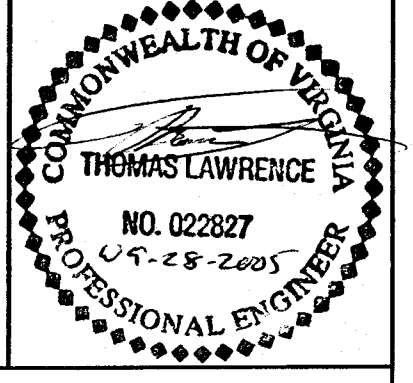

Layout Detail
36' Single 4'x4' RCB with 0° Skew and Precast Wing Walls.

AMERICAST
A Division of VALLEY BLOX, Inc.

Harrisonburg Plant
210 Stone Spring Road
Harrisonburg, VA 22801
1-800-648-2278

Halltown Plant
PO Box 120
Halltown, WV 25423
1-800-648-4580

Ashland Plant
11352 Va. Precast Rd
Ashland, VA 23005
1-800-999-2278

			Date	By/Chk
For:	G Nice	Original:	09-28-2005	TL
Job:	Warhill Site James City Co., VA	Last Rev:		
		Scale:	1" = 10'	
Str: RCB-4x4	Contract: D7079	Drw Num:	LO	

Upper Liftholes may be reproduced in bottom slab for stripping.

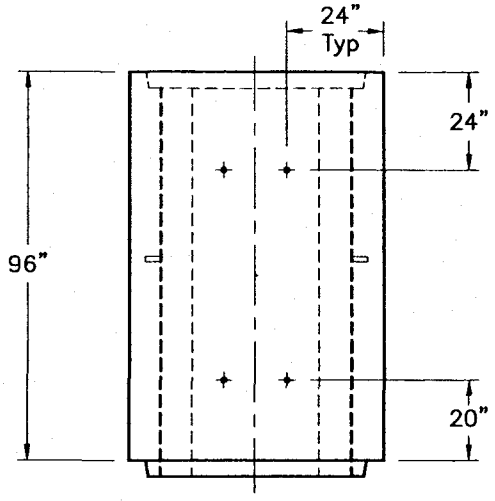

Top View

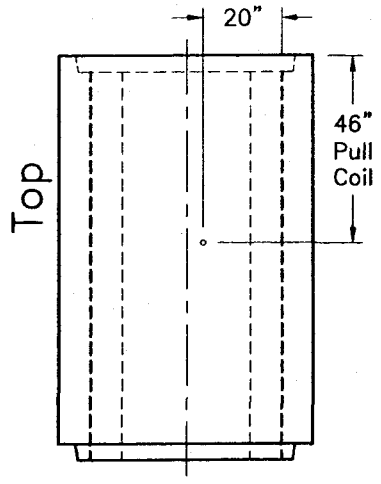

Side - Elev

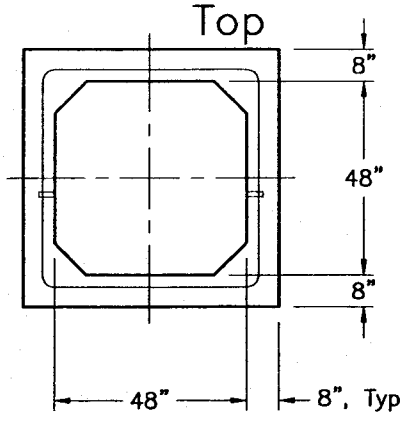

End - Elev

Pc: 2 thru 4 (3 stds req'd)
Desc: S-4x4 Standard Section
Spec: VDOT Alt-I 2'-5' Fill.
LL: 8.04'
Wt: 16,000 LBs
RCB CY: 3.951 CY

5000 psi minimum

Seal for Precast Only

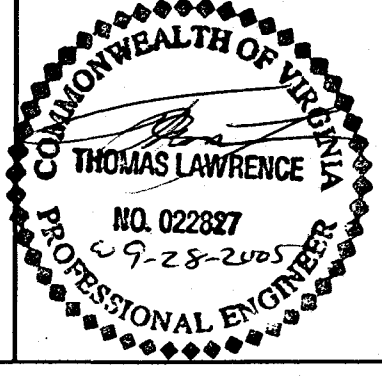

Note:
1) Liftholes to be 1 1/2" Ø PVC for 1 1/4" Double Lift Plate Assembly. Lift Code "A".

2) Pull Coils to be 1 1/4"Ø Threaded Coil Inserts for
1 1/4"Ø Threaded Rod and 1 1/4" Double Swivel Lift.

Standard Section Detail
Single 4'x4' RCB.

AMERICAST
A Division of VALLEY BLOX, Inc.

Harrisonburg Plant
210 Stone Spring Road
Harrisonburg, VA 22801
1-800-648-2278

Halltown Plant
PO Box 120
Halltown, WV 25423
1-800-648-4580

Ashland Plant
11352 Va. Precast Rd
Ashland, VA 23005
1-800-999-2278

			Date	By/Chk
For:	G Nice	Original:	09-28-2005	TL
Job:	Warhill Site James City Co., VA	Last Rev:		
		Scale:	1/4" = 1'-0"	
Str: RCB-4x4	Contract: D7079	Drw Num:	Std	

Upper Liftholes may be reproduced in bottom slab for stripping.

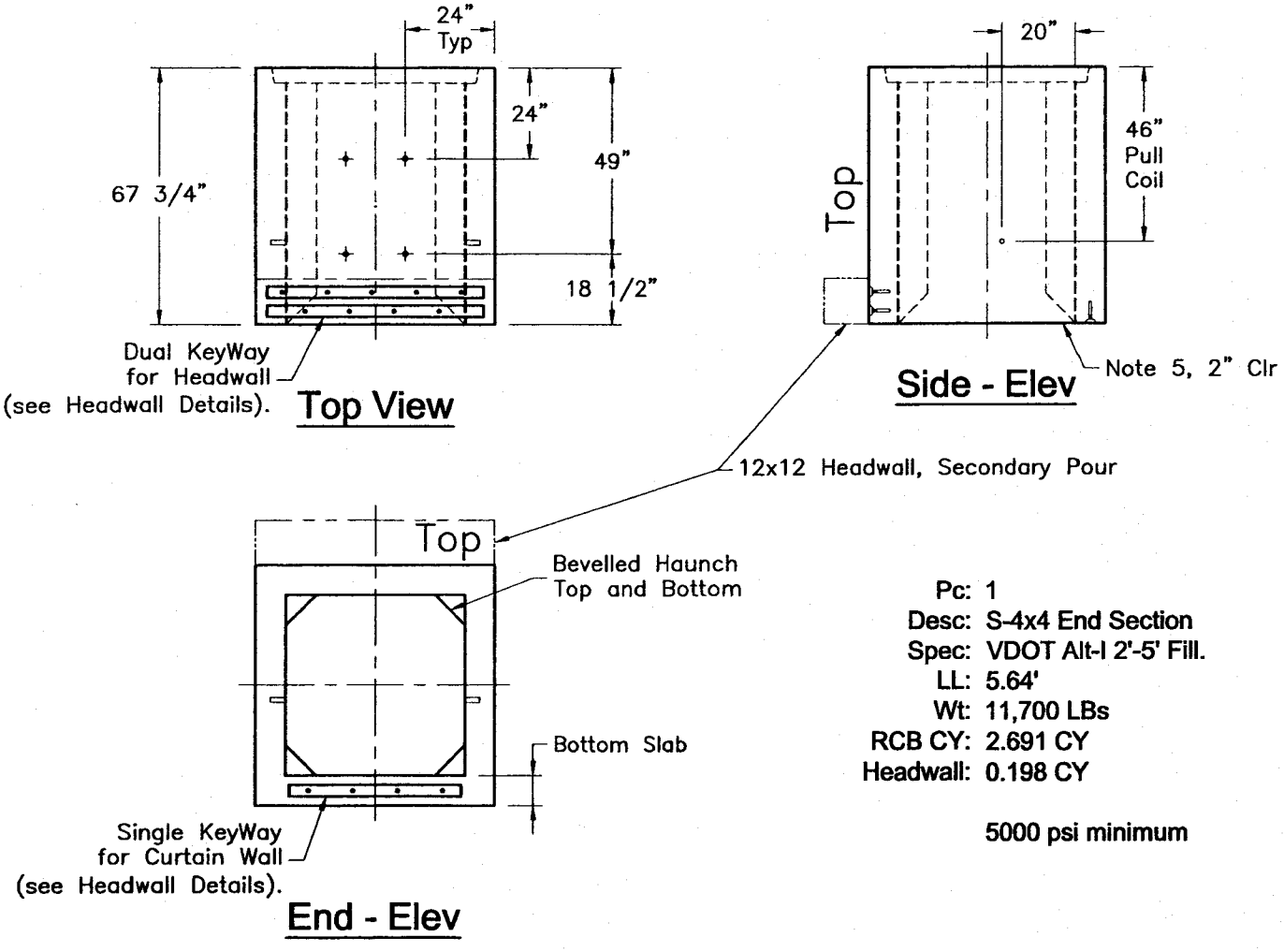

Pc: 1
Desc: S-4x4 End Section
Spec: VDOT Alt-I 2'-5' Fill.
LL: 5.64'
Wt: 11,700 LBs
RCB CY: 2.691 CY
Headwall: 0.198 CY

5000 psi minimum

Note:

1) Liftholes to be 1 1/2" Ø PVC for 1 1/4" Double Lift Plate Assembly. Lift Code "A".

2) Pull Coils to be 1 1/4"Ø Threaded Coil Inserts for 1 1/4"Ø Threaded Rod and 1 1/4" Double Swivel Lift.

3) See Headwall Details for Headwall Parapet Reinforcement.

4) Headwall Parapet to be Secondary Pour, 4000 psi minimum concrete.

5) Provide finished face with 2" Clr minimum. Outlet to receive Bevelled Haunches.

Seal for Precast Only

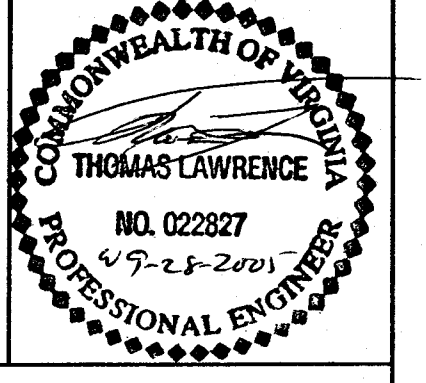

Outlet Detail

Single 4'x4' RCB with 0° Skew and Precast Parapet.

AMERICAST. A Division of VALLEY BLOX, Inc.

Harrisonburg Plant
210 Stone Spring Road
Harrisonburg, VA 22801
1-800-648-2278

Halltown Plant
PO Box 120
Halltown, WV 25423
1-800-648-4580

Ashland Plant
11352 Va. Precast Rd
Ashland, VA 23005
1-800-999-2278

			Date	By/Chk
For:	G Nice	Original:	09-28-2005	TL
Job:	Warhill Site James City Co., VA	Last Rev:		
		Scale:	1/4" = 1'-0"	
Str: RCB-4x4	Contract: D7079	Drw Num:	Pc 1	

Upper Liftholes may be reproduced in bottom slab for stripping.

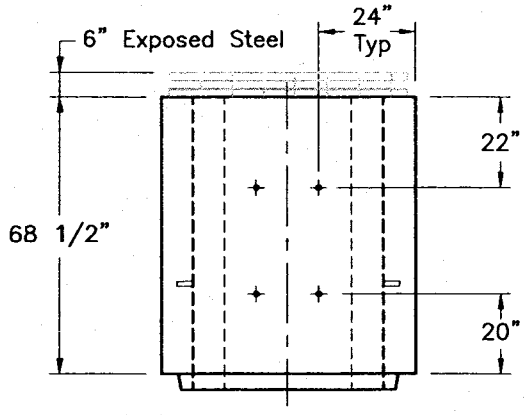

Top View

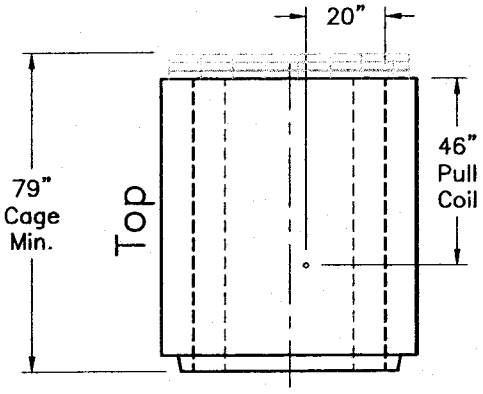

Side - Elev

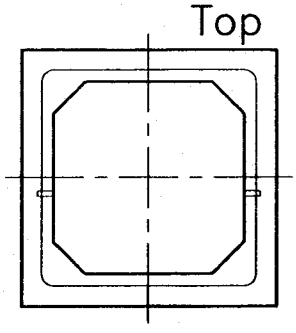

End - Elev

Pc: 5
Desc: S-4x4 End Section
Spec: VDOT Alt-I 2'-5' Fill.
LL: 5.74'
Wt: 11,800 LBs
RCB CY: 2.896 CY
Headwall: 0.000 CY

5000 psi minimum

Seal for Precast Only

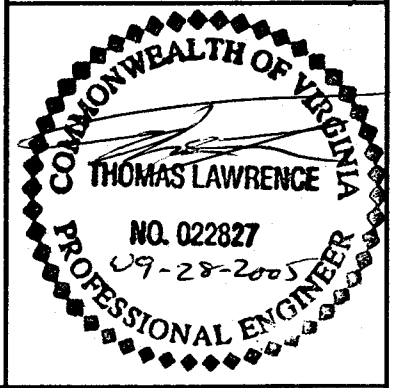

Note:
1) Liftholes to be 1 1/2" Ø PVC for 1 1/4" Double Lift Plate Assembly. Lift Code "A".

2) Pull Coils to be 1 1/4"Ø Threaded Coil Inserts for
1 1/4"Ø Threaded Rod and 1 1/4" Double Swivel Lift.

3) Provide 6" exposed steel for connection to cast in place.

Inlet Detail
Single 4'x4' RCB with 0° Skew and Exposed Steel.

AMERICAST. A Division of VALLEY BLOX, Inc.

Harrisonburg Plant
210 Stone Spring Road
Harrisonburg, VA 22801
1-800-648-2278

Halltown Plant
PO Box 120
Halltown, WV 25423
1-800-648-4580

Ashland Plant
11352 Va. Precast Rd
Ashland, VA 23005
1-800-999-2278

			Date	By/Chk
For:	G Nice	Original:	09-28-2005	TL
Job:	Warhill Site James City Co., VA	Last Rev:		
		Scale:	1/4" = 1'-0"	
Str: RCB-4x4	Contract: D7079	Drw Num:	Pc 5	

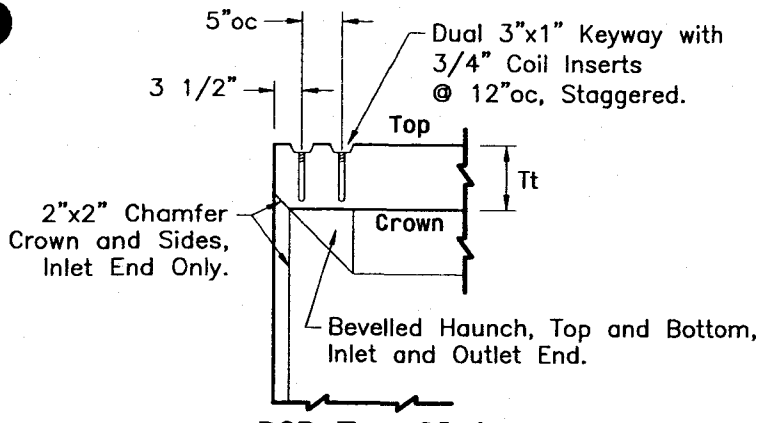

RCB Top Slab End Treatment

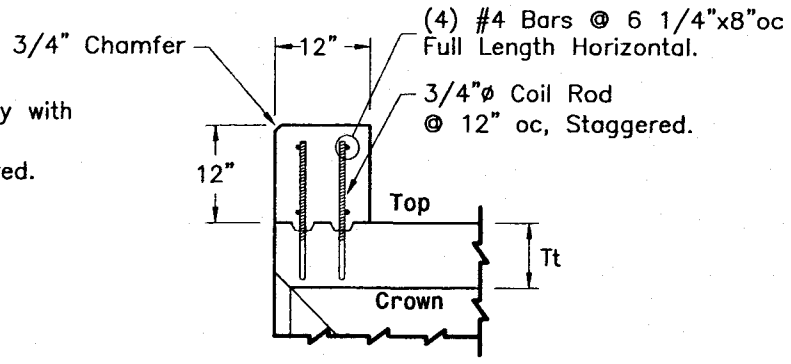

Precast Headwall Parapet

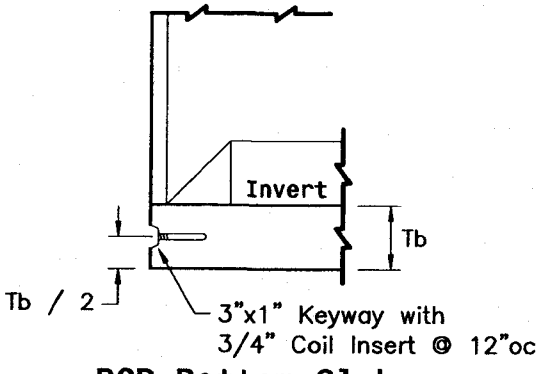

RCB Bottom Slab End Treatment

Note:

1) Inlet to receive 2"x2" Chamfer (Crown and Sides).
   Inlet and Outlet to receive Bevelled Haunches (Top and Bottom).
   3/4" Chamfer at Top-Front edge of Precast Headwall Parapet.

2) Precast Headwall Parapet to be mechanically connected to RCB End Section using 3/4" Coil Rods, supplied and installed by Americast at plant.

3) Secondary pour concrete to be in accordance with project plans and state specifications.
   Material properties: f'c = 4000 psi minimum concrete.

4) Precast Headwall Parapet to match extent and skew of Precast End Section.

5) Concrete Cover Over Reinforcement, CCOR = 2" minimum, unless noted.

Seal for Precast Only

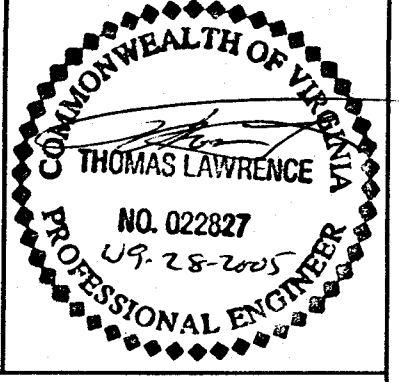

RCB Headwall and End Section Details.

AMERICAST
A Division of VALLEY BLOX, Inc.

Harrisonburg Plant
210 Stone Spring Road
Harrisonburg, VA 22801
1-800-648-2278

Halltown Plant
PO Box 120
Halltown, WV 25423
1-800-648-4580

Ashland Plant
11352 Va. Precast Rd
Ashland, VA 23005
1-800-999-2278

			Date	By/Chk
For:	G Nice	Original:	07-21-2005	TL
Job:	Warhill Site James City Co., VA	Last Rev:		
		Scale:	1/2" = 1'-0"	
Str: RCB-4x4	Contract: D7079	Drw Num:	HW-ES	

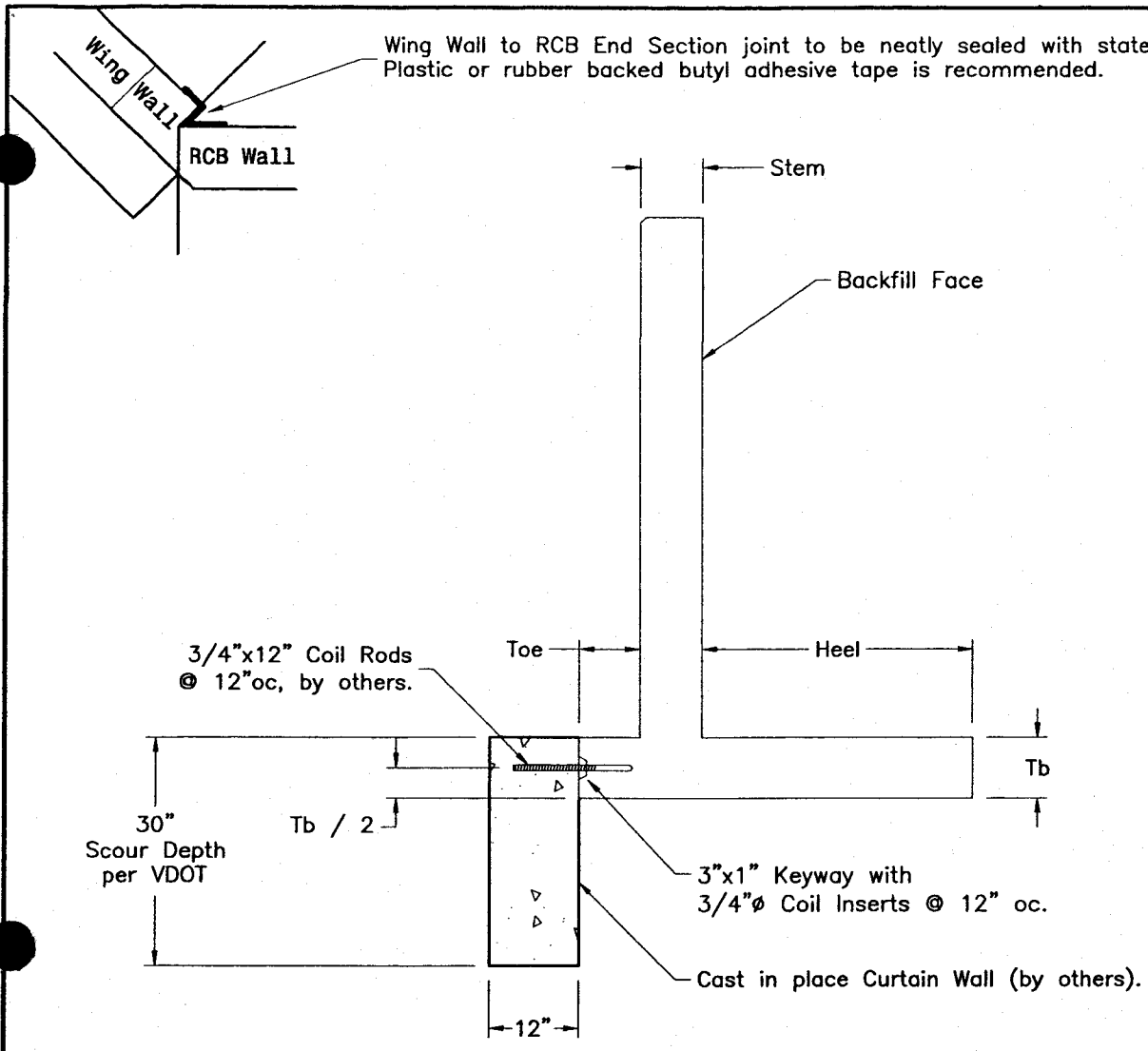

Curtain Wall at Wings

(Similar at RCB Invert)

Note:

1) 3/4" Coil Rods to be supplied and installed in field, by others.

2) Cast in place concrete, by others, to be in accordance with project plans and state specifications. Material properties: f'c = 4000 psi minimum concrete.

3) Cast in place curtain wall to extend 12" from invert face of precast as shown and be continuous from wing tip to wing tip, with expansion joints as needed.

4) Concrete Cover Over Reinforcement, CCOR = 2" minimum, unless noted.

5) Wing Wall to RCB End Section joint to be neatly sealed with state approved sealant. Plastic or rubber backed butyl adhesive tape is recommended.

Seal for Precast Only

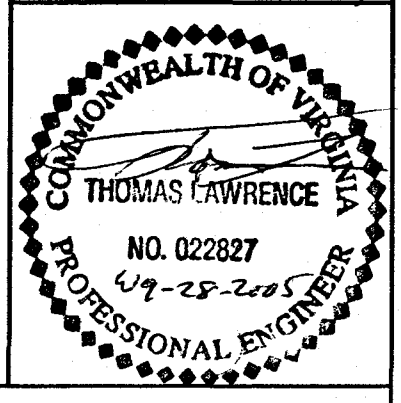

Cast In Place Curtain Wall

AMERICAST
A Division of VALLEY BLOX, Inc.

Harrisonburg Plant
210 Stone Spring Road
Harrisonburg, VA 22801
1-800-648-2278

Halltown Plant
PO Box 120
Halltown, WV 25423
1-800-648-4580

Ashland Plant
11352 Va. Precast Rd
Ashland, VA 23005
1-800-999-2278

			Date	By/Chk
For:	G Nice	Original:	07-21-2005	TL
Job:	Warhill Site James City Co., VA	Last Rev:		
		Scale:	1/2" = 1'-0"	
Str: RCB-4x4	Contract: D7079	Drw Num:	Curtain	

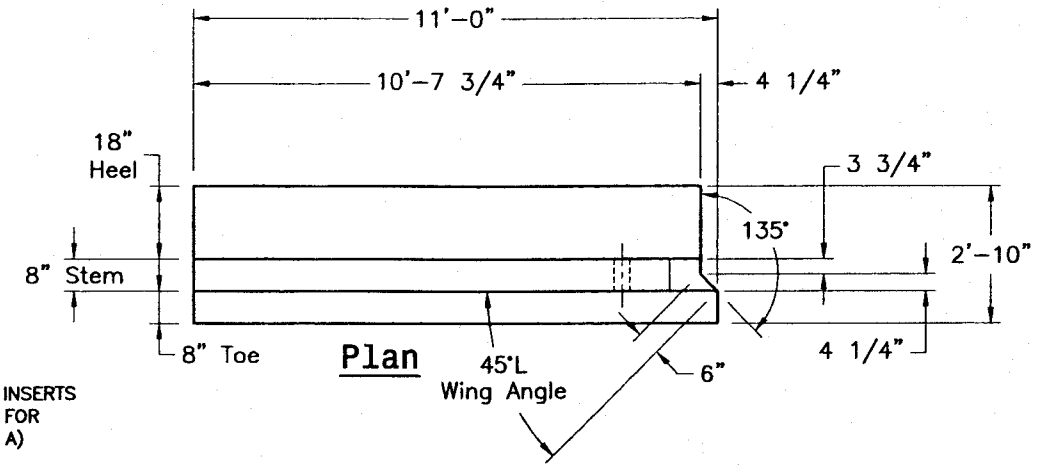

✦ = 1 1/4"ø COIL INSERTS (OPPOSITE FACE) FOR STRIPPING (CODE A)

✕ = 1 1/4"ø LIFTING SLEEVE (LIFT FROM BACK FACE) FOR HANDLING (CODE A)

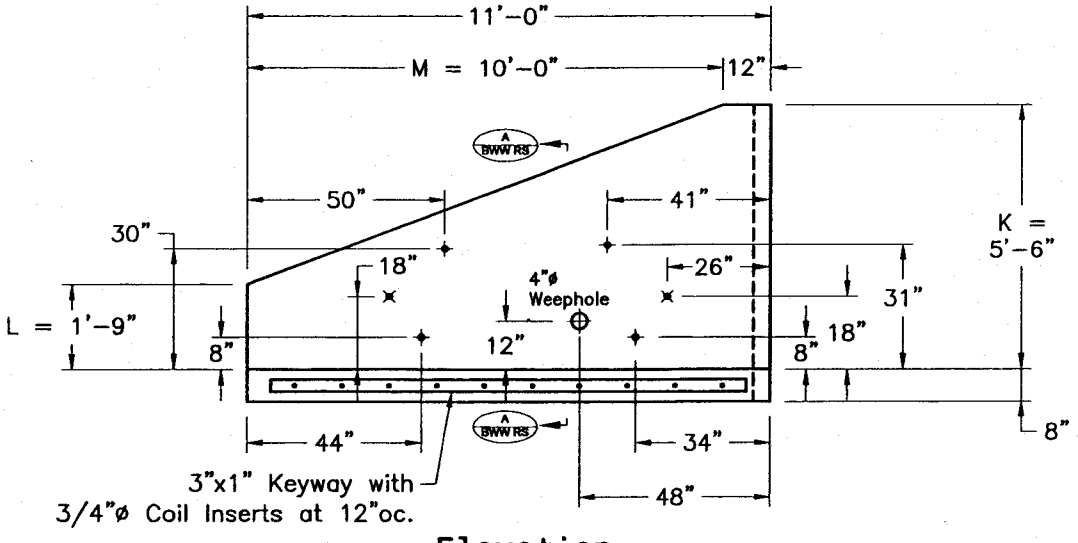

Elevation

Note:

1) Liftholes to be 1 1/4" Ø PVC for 1 1/4" Double Lift Plate Assembly. Lift from back face or both faces for best balance. Lift Code "A".

2) Strip Coils to be 1 1/4"Ø Threaded Coil Inserts. Strip Code "A".

3) See also Reinforcement Section detail BWW RS. Reinforcement to be A615 Deformed Bars or A497 Deformed WWF. Material properties: f'c = 4 ksi, fy = 60 ksi.

4) 3/4" Chamfer on Top-Front edge.

5) Concrete Cover Over Reinforcement, CCOR = 1.5" unless noted. Tolerance on Concrete Cover Over Reinforcement to be -0, +1/2".

Pc: LW1
Desc: BWW-21-4'-45°L
Spec: VDOT
LL: na
Wt: 7,100 LBs
Vol: 1.743 CY

Seal for Precast Only

COMMONWEALTH OF VIRGINIA
THOMAS LAWRENCE
NO. 022827
09-28-2005
PROFESSIONAL ENGINEER

4' Rise RCB Wing Wall
2:1 Slope, Type I, 45°L Wing Angle.

AMERICAST
A Division of VALLEY BLOX, Inc.

Harrisonburg Plant
210 Stone Spring Road
Harrisonburg, VA 22801
1-800-648-2278

Halltown Plant
PO Box 120
Halltown, WV 25423
1-800-648-4580

Ashland Plant
11352 Va. Precast Rd
Ashland, VA 23005
1-800-999-2278

For: G Nice

Job: Warhill Site
James City Co., VA

	Date	By/Chk
Original:	09-28-2005	TL
Last Rev:		
Scale:	1/4" = 1'-0"	

Str: RCB-4x4 | Contract: D7079 | Drw Num: BWW-L

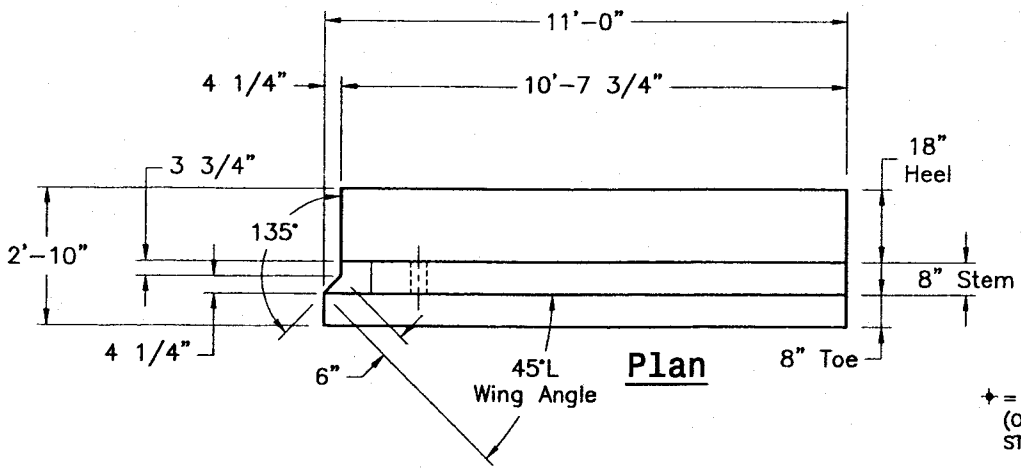

Plan

✦ = 1 1/4"ø COIL INSERTS (OPPOSITE FACE) FOR STRIPPING (CODE A)

✕ = 1 1/4"ø LIFTING SLEEVE (LIFT FROM BACK FACE) FOR HANDLING (CODE A)

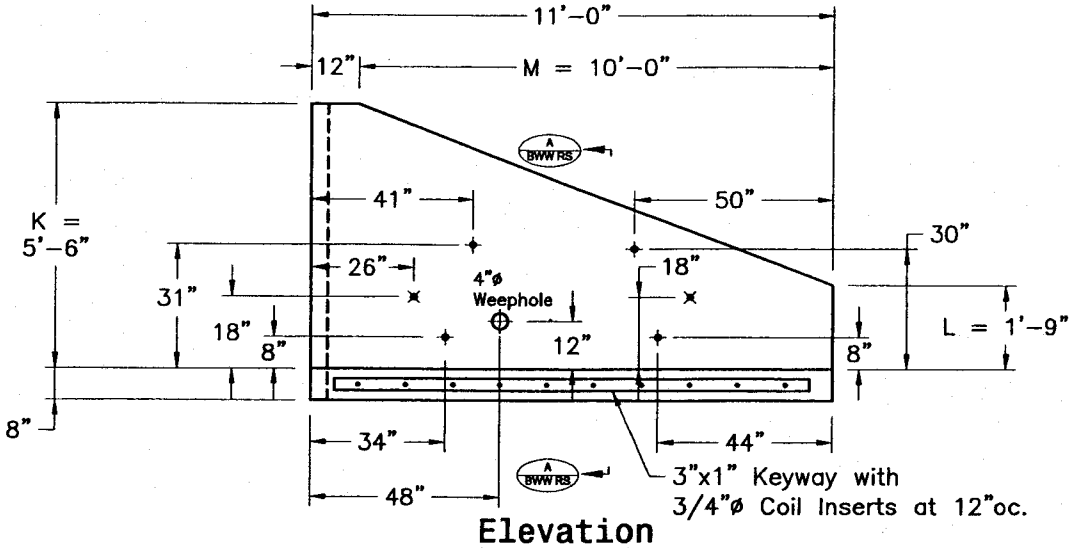

Elevation

Note:

1) Liftholes to be 1 1/4" Ø PVC for 1 1/4" Double Lift Plate Assembly. Lift from back face or both faces for best balance. Lift Code "A".

2) Strip Coils to be 1 1/4"Ø Threaded Coil Inserts. Strip Code "A".

3) See also Reinforcement Section detail BWW RS. Reinforcement to be A615 Deformed Bars or A497 Deformed WWF. Material properties: f'c = 4 ksi, fy = 60 ksi.

4) 3/4" Chamfer on Top-Front edge.

5) Concrete Cover Over Reinforcement, CCOR = 1.5" unless noted. Tolerance on Concrete Cover Over Reinforcement to be -0, +1/2".

Pc: RW1
Desc: BWW-21-4'-45°R
Spec: VDOT
LL: na
Wt: 7,100 LBs
Vol: 1.743 CY

Seal for Precast Only

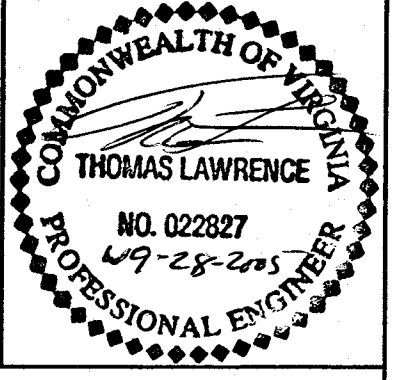

4' Rise RCB Wing Wall
2:1 Slope, Type I, 45°R Wing Angle.

AMERICAST
A Division of VALLEY BLOX, Inc.

Harrisonburg Plant
210 Stone Spring Road
Harrisonburg, VA 22801
1-800-648-2278

Halltown Plant
PO Box 120
Halltown, WV 25423
1-800-648-4580

Ashland Plant
11352 Va. Precast Rd
Ashland, VA 23005
1-800-999-2278

For: G Nice

Job: Warhill Site
James City Co., VA

	Date	By/Chk
Original:	09-28-2005	TL
Last Rev:		
Scale:	1/4" = 1'-0"	

Str: RCB-4x4 | Contract: D7079 | Drw Num: BWW-R

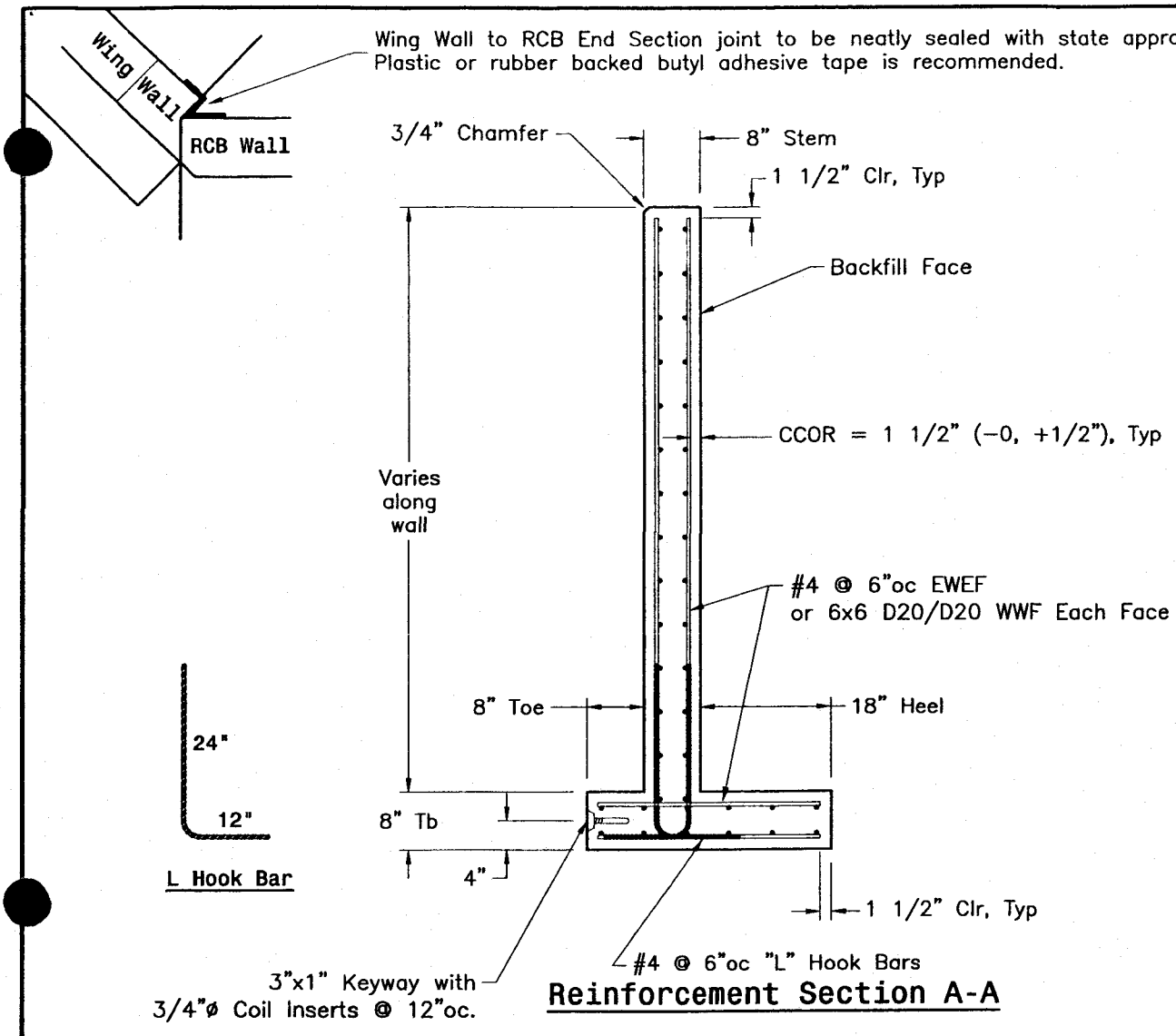

Reinforcement Section A-A

Note:

1) **Reinforcement to be ASTM A615 Deformed Bars or ASTM A497 Deformed WWF. Material properties: f'c = 4 ksi, fy = 60 ksi.**

2) **Stem wall reinforcement to be tied to footer bottom reinforcement with "L" Hook Bars. Horizontal legs to extend from rear face forward into toe and from front face back into heel. If stem wall reinforcement is made from rebar, rebar may be bent at bottom and tied to continuous footer bottom reinforcement.**

3) **3/4" Chamfer on Top-Front edge.**

4) **Concrete Cover Over Reinforcement, CCOR = 1.5" unless noted. Tolerance on Concrete Cover Over Reinforcement to be -0, +1/2".**

5) **Wing Wall to RCB End Section joint to be neatly sealed with state approved sealant. Plastic or rubber backed butyl adhesive tape is recommended.**

Seal for Precast Only

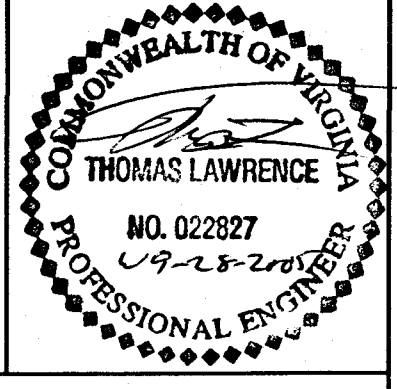

RCB Wing Wall
Reinforcement Section

AMERICAST
A Division of VALLEY BLOX, Inc.

Harrisonburg Plant
210 Stone Spring Road
Harrisonburg, VA 22801
1-800-648-2278

Halltown Plant
PO Box 120
Halltown, WV 25423
1-800-648-4580

Ashland Plant
11352 Va. Precast Rd
Ashland, VA 23005
1-800-999-2278

For: G Nice		Date	By/Chk
	Original:	09-28-2005	TL
Job: Warhill Site James City Co., VA	Last Rev:		
	Scale:	1/2" = 1'-0"	
Str: RCB-4x4 / Contract: D7079	Drw Num:	BWW RS	

Design Requirements: Precast Reinforced Concrete Box Section																			
Design			RCB Geometry					Dimensional Limits of Reinforcement					Circumferential Reinforcement (Sq.In./LF)						
Design Designation	Live Load	Fill Range	Tt	Tb	Twx	Twi	H	Zmt	Zmb	s1	s2	s3	As1	As2	As3	As4	As7	As8	AsC
S0404V205	ALT-I	02-05	8	8	8	8	8	2	2	4	4	4	0.192	0.232	0.192	0.192	0.192	0.192	na
No special notes.																			

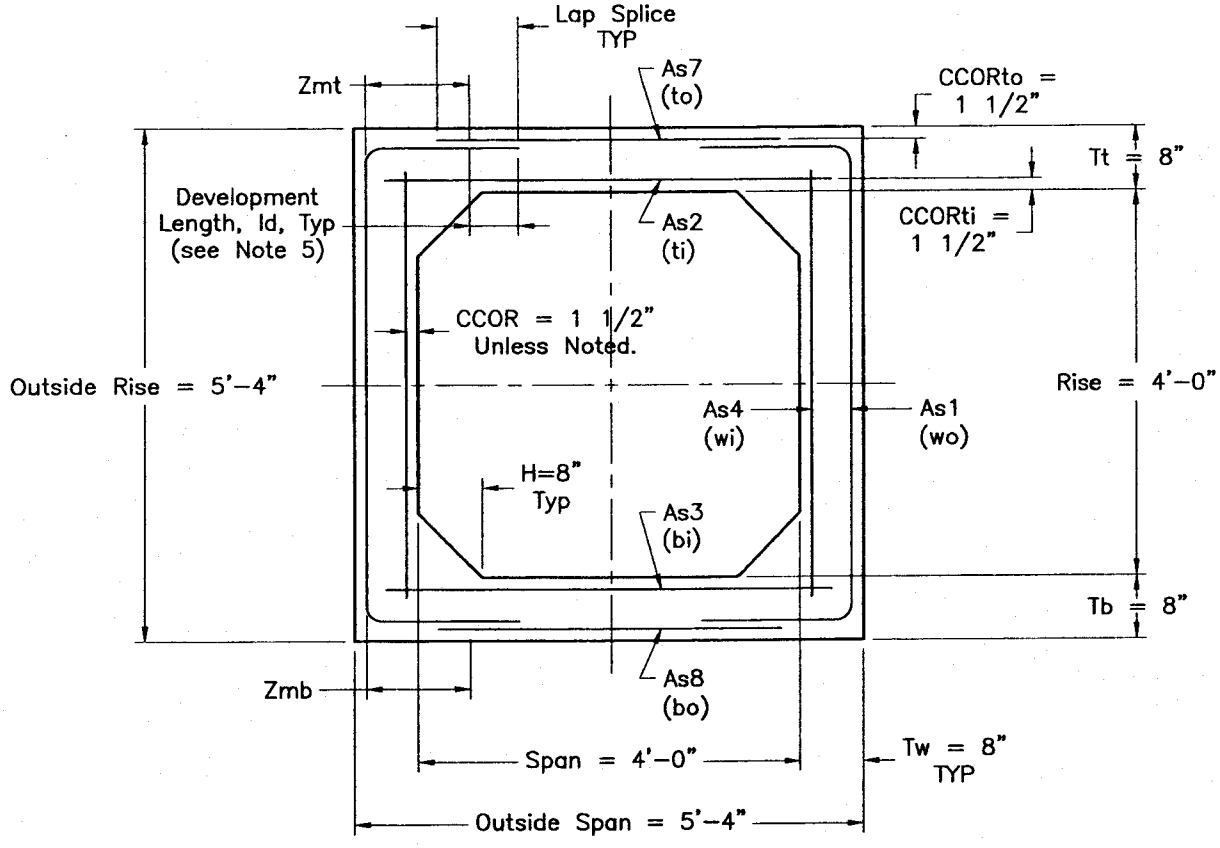

RCB Standard Section

Seal for Precast Only

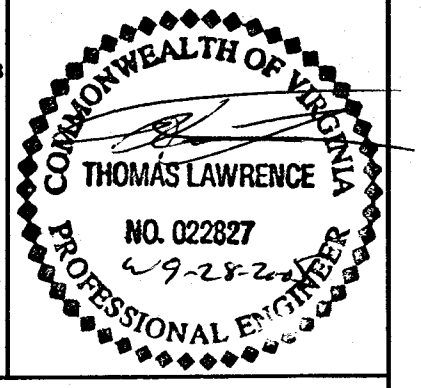

Note:

1) RCB designed in accordance with ASTM C1433 Article 7.2, AASHTO Bridge Specifications Sections 16 and 8
   Materials and purchasing in accordance with ASTM C1433. Material properties: f'c = 5 ksi, fy = 65 ksi.
   Installation criteria: AASHTO Division II Section 27.
2) Concrete Cover Over Reinforcement, CCOR = 1.5".
   For fills less than 2', top outside CCORto = 2.5", and top inside CCORti = 2.0".
3) Maximum spacings of circumferential wires for As1, As2, and As3 to be s1, s2 and s3 respectively listed in Design Requirements Table. These maximum spacings, limited by design for crack control, may be reduced to 2" minumum.
4) Reinforcement as shown is schematic only. Reinforcement units may be combined and welded wire fabric areas and styles may be substituted provided that the requirements of each unit are met.
5) Development of WWF in accordance with AASHTO Article 8.30;
   Splices of WWF in accordance with AASHTO Article 8.32, (one space + 2" minimum, more for larger areas).

RCB Reinforcement Section
Single 4'x4' VDOT-ASTM C1433 Alt-I for 2'-5' Fill.

AMERICAST.
A Division of VALLEY BLOX, Inc.

Harrisonburg Plant
210 Stone Spring Road
Harrisonburg, VA 22801
1-800-648-2278

Halltown Plant
PO Box 120
Halltown, WV 25423
1-800-648-4580

Ashland Plant
11352 Va. Precast Rd
Ashland, VA 23005
1-800-999-2278

For:	G Nice		Date	By/Chk
		Original:	09-28-2005	TL
Job:	Warhill Site James City Co., VA	Last Rev:		
		Scale:	1/2" = 1'-0"	
Str: RCB-4x4	Contract: D7079	Drw Num:	RS	

Reinforcement Unit Summary: WWF Wire Style / Description							Concrete Cover Over Reinforcement
Tag	N @ Astl	Grid	Wire Sizes	Width(+OH) x Length(OH)	OA Length	R'Coat	
As178	1 @ 0.498	2x8	W8.3 / W4.0	94(+1,+0) x 131(1.5,1.5)	[10'-11"OA]	None	CCORto = 1.5" CCORti = 1.5" CCOR = 1.5" CCOR Tolerance: (-0, +1/2")
As234	1 @ 0.498	2x8	W8.3 / W4.0	94(+1,+0) x 131(1.5,1.5)	[10'-11"OA]	None	
Stock Steel							
As1, As7 and As8 integrated into a single unit: As178							Check Component Details for Additional Reinforcement
As2, As3 and As4 integrated into a single unit: As234							

Extension dimensions approximate, Hold Bend Dimensions.
Circumferential Wires toward Face of Concrete.

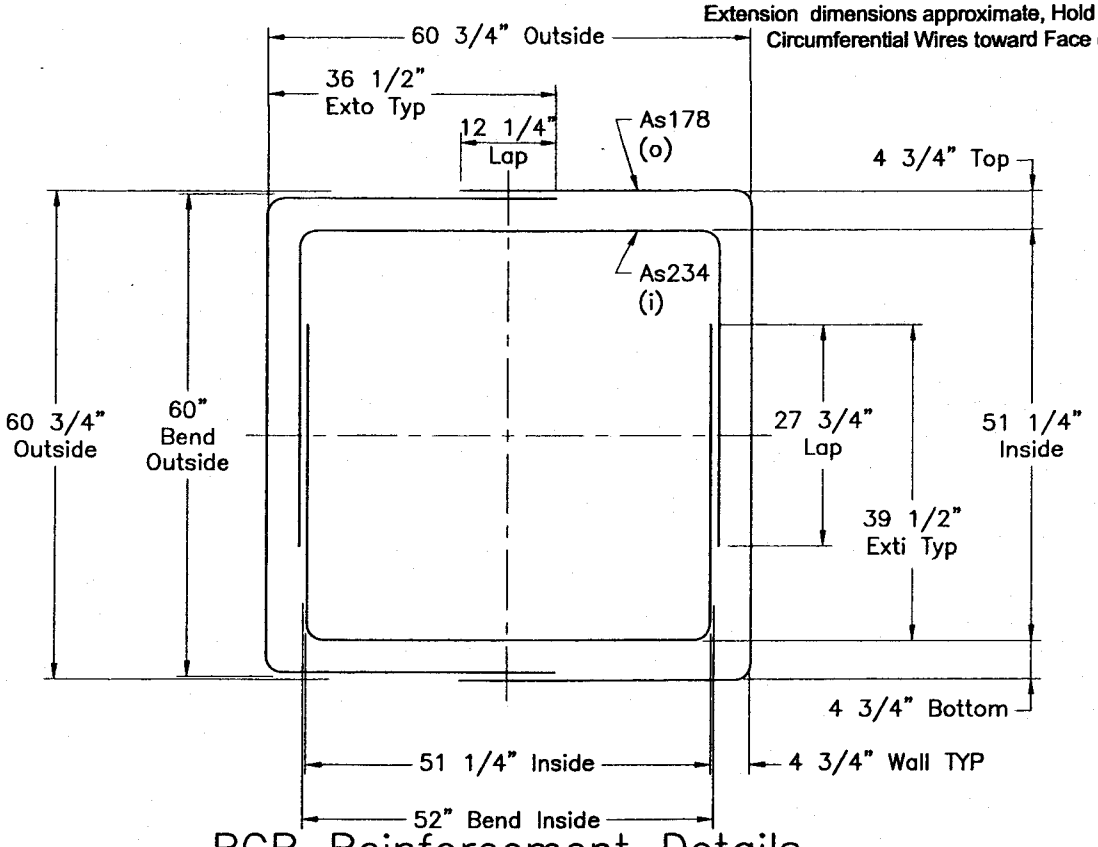

RCB Reinforcement Details

Seal for Precast Only

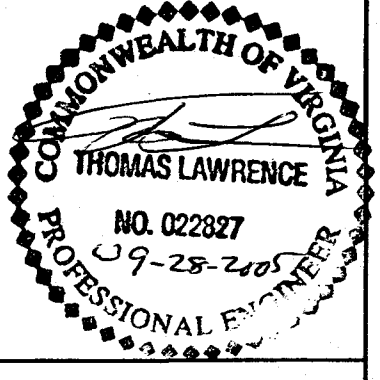

Note:

1) In accordance with ASTM C1433, reinforcement to be A185 Smooth WWF or A497 Deformed WWF. Material properties: f'c = 5 ksi, fy = 65 ksi.
2) Tolerance on Concrete Cover Over Reinforcement to be -0, +1/2".
3) Maximum spacings of circumferential wires for As1, As2, and As3 to be s1, s2 and s3 respectively listed in Design Requirements table. These maximum spacings, limited by design for crack control, may be reduced to 2" minumum.
   Spacing of longitudinal wires to be 4" minimum to 8" maximum.
4) Reinforcement as shown is schematic only. Reinforcement units may be combined and welded wire fabric areas and styles may be substituted provided that the requirements of each unit are met
5) Development of WWF in accordance with AASHTO Article 8.30;
   Splices of WWF in accordance with AASHTO Article 8.32,
   (one space + 2" minimum, more for larger areas).

RCB Reinforcement Detail
Single 4'x4' VDOT-ASTM C1433 Alt-I for 2'-5' Fill.

AMERICAST®
A Division of VALLEY BLOX, Inc.

Harrisonburg Plant
210 Stone Spring Road
Harrisonburg, VA 22801
1-800-648-2278

Halltown Plant
PO Box 120
Halltown, WV 25423
1-800-648-4580

Ashland Plant
11352 Va. Precast Rd
Ashland, VA 23005
1-800-999-2278

			Date	By/Chk
For:	G Nice	Original:	09-28-2005	TL
Job:	Warhill Site James City Co., VA	Last Rev:		
		Scale:	1/2" = 1'-0"	
Str: RCB-4x4	Contract: D7079	Drw Num:	RD	

BOXCAR

Version 2.03 for Windows
12 March 2001

A Computer Program for the Structural
Design of Reinforced Concrete Box
Culverts

Developed by

Simpson Gumpertz & Heger Inc.
Arlington Massachusetts
in cooperation with

The Federal Highway Administration
and
The American Concrete Pipe Association

The successful application and use of this software product is dependent on the application of skilled engineering judgment and is the responsibility of the user. The user must select input values suitable to his specific installation. The information presented in the computer output is for review, interpretation, application and approval by a qualified engineer.

****

ANY IMPLIED OR EXPRESS WARRANTIES COVERING THE SOFTWARE PROGRAM OR PROGRAM USER MANUAL INCLUDING ANY WARRANTIES OF MERCHANTABILITY OR FITNESS FOR A PARTICULAR PURPOSE ARE EXPRESSLY EXCLUDED. SIMPSON GUMPERTZ & HEGER INC., THE AMERICAN CONCRETE PIPE ASSOCIATION, AND THE FEDERAL HIGHWAY ADMINISTRATION SHALL NOT BE LIABLE FOR SPECIAL, INCIDENTAL, CONSEQUENTIAL INDIRECT OR OTHER SIMILAR DAMAGES ARISING FROM BREACH OF WARRANTY, BREACH OF CONTRACT OR OTHER LEGAL THEORY EVEN IF SUCH PARTIES HAVE BEEN ADVISED OF SUCH DAMAGES.

****

Date: 09-28-2005
Time: 09:52:06

Filename - 0404V205
Job Description - 4'x4' VDOT-ASTM Alt-I 2'-5' Fill

GEOMETRY

Span	4. ft	Top Slab Thickness	8. in.
Rise	4. ft	Bottom Slab Thickness	8. in.
Min. Depth of Fill	2. ft	Sidewall Thickness	8. in.
Max. Depth of Fill	0. ft	Length of Precast Section	8. ft
Depth Increment	0. ft		

HAUNCH DIMENSIONS		CONCRETE COVERS	
Top Vertical	0. in.	Top Outside	1.50 in.
Top Horizontal	0. in.	Bottom Outside	1.50 in.
Bottom Vertical	0. in.	Sidewall Outside	1.50 in.
Bottom Horizontal	0. in.	Top Inside	1.50 in.
		Bottom Inside	1.50 in.
		Sidewall Inside	1.50 in.

MATERIAL PROPERTIES

Main Reinforcing Yield Stress	65000.	psi
Design Concrete Strength	5000.	psi
Concrete Density	150.	pcf

DESIGN SPECIFICATION AASHTO Standard

LOAD FACTORS

Dead Load:	Shear and Moment	1.30
	Thrust	1.00
Live Load:	Shear and Moment	2.17
	Thrust	1.00

LOAD MODIFIERS

Dead Load:	Shear and Moment	1.00
	Thrust	1.00
Live Load:	Shear and Moment	1.00
	Thrust	1.00

STRENGTH REDUCTION FACTORS

Flexure	0.90
Shear	0.85

REINFORCING DATA

	DIAMETER	SPACING
Top Slab Outside Face(AS7)	0.325 in.	4 in.
Bottom Slab Outside Face(AS8)	0.325 in.	4 in.
Sidewall Outside Face(AS1)	0.325 in.	4 in.
Top Slab Inside Face(AS2)	0.325 in.	4 in.
Bottom Slab Inside Face(AS3)	0.325 in.	4 in.
Sidewall Inside Face(AS4)	0.325 in.	4 in.

The diameters are used to estimate depth to tension reinforcing from compression face. They do not represent required reinforcing diameters.

SOIL LOAD DATA

Soil Density	120 pcf
Minimum Lateral Pressure Coefficient	0.13
Maximum Lateral Pressure Coefficient	0.50
Installation Type	Embankment/Compacted
Soil-Structure Interaction Factor	1.075

LIVE LOAD DATA

Live Load	Interstate(Alt. Military Loading)
Live Load Magnitude	24.0 kips
Tire Footprint Length	.0 in.
Tire Footprint Width	.0 in.
Live Load Distribution Factor	1.75
Direction of travel	Parallel to span
Impact Factor	1.10
Lane Load	0.0 psf

SURCHARGE LOADS

Vertical Pressure	0.0 psf
Horiz. Pressure at Culvert Top	0.0 psf
Horiz. Pressure at Culvert Bottom	0.0 psf
Application Code	Additional Dead Load

FLUID LOADS

Depth of Fluid	3.0 ft
Fluid Density	62.5 pcf

MEMBER LOADS
Load Conditions 1 to 10

Load Condition	Member	Load Intensity at Start of Load (k/in./ft)	Load Intensity at End of Load (k/in./ft)	Distance from A-End to Start of Load (in.)	Distance from A-End to End of Load (in.)
1	1	0.008	0.008	0.0	56.0
1	2	0.000	0.000	0.0	0.0
1	3	0.025	0.025	0.0	56.0
1	4	0.000	0.000	0.0	0.0
2	1	0.022	0.022	0.0	56.0
2	2	0.000	0.000	0.0	0.0
2	3	0.022	0.022	0.0	56.0
2	4	0.000	0.000	0.0	0.0
3	1	0.000	0.000	0.0	0.0
3	2	0.003	0.009	0.0	56.0
3	3	0.000	0.000	0.0	0.0
3	4	0.009	0.003	0.0	56.0
4	1	0.000	0.000	0.0	0.0
4	2	0.000	-0.016	16.0	52.0
4	3	-0.002	-0.002	4.0	52.0
4	4	-0.016	0.000	4.0	40.0
5	1	0.000	0.000	0.0	0.0
5	2	0.008	0.028	0.0	56.0
5	3	0.000	0.000	0.0	0.0
5	4	0.028	0.008	0.0	56.0
6	1	0.000	0.000	0.0	0.0
6	2	0.000	0.000	0.0	0.0
6	3	0.000	0.000	0.0	0.0
6	4	0.000	0.000	0.0	0.0
7	1	0.081	0.081	0.0	56.0
7	2	0.000	0.000	0.0	0.0
7	3	0.081	0.081	0.0	56.0
7	4	0.000	0.000	0.0	0.0
8	1	0.000	0.000	0.0	0.0
8	2	0.035	0.010	0.0	56.0
8	3	0.000	0.000	0.0	0.0
8	4	0.010	0.035	0.0	56.0
9	1	0.000	0.000	0.0	56.0
9	2	0.000	0.000	0.0	0.0
9	3	0.000	0.000	0.0	56.0
9	4	0.000	0.000	0.0	0.0
10	1	0.000	0.000	0.0	0.0
10	2	0.000	0.000	0.0	56.0
10	3	0.000	0.000	0.0	0.0
10	4	0.000	0.000	0.0	56.0

MEMBER LOADS
Load Conditions with Concentrated Wheel Loads

Load Condition	Member	Truck Wheel Number	Load Intensity at Start of Load (k/in./ft)	Load Intensity at End of Load (k/in./ft)	Distance from A-End to Start of Load (in.)	Distance from A-End to End of Load (in.)
11	1	1	0.000	0.000	0.0	0.0
11	1	2	0.114	0.114	0.0	21.5
11	1	3	0.000	0.000	0.0	0.0
11	1	4	0.000	0.000	0.0	0.0
11	3	-	0.000	0.152	23.7	56.0
12	1	1	0.000	0.000	0.0	0.0
12	1	2	0.114	0.114	10.3	53.4
12	1	3	0.000	0.000	0.0	0.0
12	1	4	0.000	0.000	0.0	0.0
12	3	-	0.124	0.052	0.0	56.0
13	1	1	0.000	0.000	0.0	0.0
13	1	2	0.114	0.114	10.3	53.4
13	1	3	0.000	0.000	0.0	0.0
13	1	4	0.000	0.000	0.0	0.0
13	3	-	0.124	0.052	0.0	56.0
14	1	1	0.000	0.000	0.0	0.0
14	1	2	0.114	0.114	8.4	51.4
14	1	3	0.000	0.000	0.0	0.0
14	1	4	0.000	0.000	0.0	0.0
14	3	-	0.106	0.070	0.0	56.0
15	1	1	0.000	0.000	0.0	0.0
15	1	2	0.114	0.114	7.5	50.5
15	1	3	0.000	0.000	0.0	0.0
15	1	4	0.000	0.000	0.0	0.0
15	3	-	0.097	0.079	0.0	56.0
16	1	1	0.000	0.000	0.0	0.0
16	1	2	0.114	0.114	6.5	49.5
16	1	3	0.000	0.000	0.0	0.0
16	1	4	0.000	0.000	0.0	0.0
16	3	-	0.088	0.088	0.0	56.0
17	1	1	0.000	0.000	0.0	0.0
17	1	2	0.114	0.114	5.5	48.5
17	1	3	0.000	0.000	0.0	0.0
17	1	4	0.000	0.000	0.0	0.0
17	3	-	0.079	0.097	0.0	56.0
18	1	1	0.000	0.000	0.0	0.0
18	1	2	0.114	0.114	4.6	47.6
18	1	3	0.000	0.000	0.0	0.0
18	1	4	0.000	0.000	0.0	0.0
18	3	-	0.070	0.106	0.0	56.0
19	1	1	0.000	0.000	0.0	0.0
19	1	2	0.114	0.114	2.6	45.7
19	1	3	0.000	0.000	0.0	0.0
19	1	4	0.000	0.000	0.0	0.0
19	3	-	0.052	0.124	0.0	56.0
20	1	1	0.000	0.000	0.0	0.0
20	1	2	0.114	0.114	2.6	45.7

20	1	3	0.000	0.000	0.0	0.0
20	1	4	0.000	0.000	0.0	0.0
20	3	-	0.052	0.124	0.0	56.0
21	1	1	0.000	0.000	0.0	0.0
21	1	2	0.114	0.114	34.5	56.0
21	1	3	0.000	0.000	0.0	0.0
21	1	4	0.000	0.000	0.0	0.0
21	3	-	0.152	0.000	0.0	32.3

ULTIMATE LOAD FORCES

Sect.	Max M+ (in.-kip/ft)	Max V+ (kip/ft)	Max P+ (kip/ft)	Max M- (in.-kip/ft)	Max V- (kip/ft)	Max P- (kip/ft)
1	71.25	.94	.08	.00	-.94	1.39
2	1.97	6.69	.02	-21.89	.00	1.45
3	1.97	6.69	.02	-21.89	.00	1.45
4	.00	.01	1.16	-37.47	-2.01	3.79
5	.00	.01	1.16	-37.47	-2.01	3.79
6	14.17	.15	1.16	-34.11	-.18	3.96
7	.00	1.90	1.16	-35.73	-.13	3.96
8	.00	1.90	1.16	-35.73	-.13	3.96
9	.60	.00	.07	-18.00	-6.49	1.47
10	.60	.00	.07	-18.00	-6.49	1.47
11	65.46	.85	.02	.00	-.85	1.53
12	28.95	5.25	.07	-5.60	.00	1.39
13	28.95	5.25	.07	-5.60	.00	1.39
14	3.58	.04	1.16	-34.85	-1.46	3.79
15	3.58	.04	1.16	-34.85	-1.46	3.79
16	.04	1.45	1.16	-33.65	-.08	3.96
17	.04	1.45	1.16	-33.65	-.08	3.96
18	29.96	.00	.02	-4.48	-4.53	1.53
19	29.96	.00	.02	-4.48	-4.53	1.53

******* SERVICE LOAD REINFORCEMENT TENSILE STRESSES TABLE *******

Design Location	As (in.²/ft)	Service Live Load Stress (ksi)	Total Service Load Stress (ksi)	Allowable Total Service Load Stress (ksi)
1	.192	.44	.00	34.92
2	.192	4.59	5.92	34.92
3	.192	4.59	5.92	34.92
4	.192	6.01	7.07	34.92
5	.192	6.01	7.07	34.92
6	.192	4.26	5.40	34.92
7	.192	3.82	6.74	34.92
8	.192	3.82	6.74	34.92
9	.192	3.37	5.05	34.92
10	.192	3.37	5.05	34.92
11	.192	1.05	.00	34.92
1	.232	21.00	27.13	34.92
6	.192	5.37	3.09	34.92
11	.192	21.00	31.58	34.92

******* FLEXURE DESIGN TABLE *******

Des Sec.	Wall, Sign of Moment	Depth to Reinf.	Ult. Moment	Ult. Thrust	Ult. Flex. Reinf. (1)	Crack Index	Governing Reinf. Area (2)	Governing Mode (3)
1	Top-Neg	6.34	0.0	1.39	0.000	0.00	0.192	Min Stl
2	Top-Neg	6.34	21.9	1.45	0.044	0.17	0.192	Min Stl
3	Top-Neg	6.34	21.9	1.45	0.044	0.17	0.192	Min Stl
4	Side-Neg	6.34	37.5	3.79	0.062	0.20	0.192	Min Stl
5	Side-Neg	6.34	37.5	3.79	0.062	0.20	0.192	Min Stl
6	Side-Neg	6.34	34.1	3.96	0.051	0.15	0.192	Min Stl
7	Side-Neg	6.34	35.7	3.96	0.055	0.19	0.192	Min Stl
8	Side-Neg	6.34	35.7	3.96	0.055	0.19	0.192	Min Stl
9	Bott-Neg	6.34	18.0	1.47	0.033	0.14	0.192	Min Stl
10	Bott-Neg	6.34	18.0	1.47	0.033	0.14	0.192	Min Stl
11	Bott-Neg	6.34	0.0	1.53	0.000	0.00	0.192	Min Stl
1	Top-Pos	6.34	71.2	0.08	0.196	0.78	0.232	Stl Strs
6	Side-Pos	6.34	14.2	1.16	0.026	0.09	0.192	Min Stl
11	Bott-Pos	6.34	65.5	0.02	0.180	0.90	0.192	Min Stl

Notes:

1. Required reinforcing to develop ultimate flexural strength.
2. Reinforcing required to meet all design criteria. The governing criteria is indicated under the column 'Governing Mode'.
3. If governing mode is listed as crack, the reinforcing may be reduced by decreasing the maximum reinforcing spacing.
4. Crack Index is defined as the total service load stress divided by the allowable total service load stress.
5. Minimum flexural reinforcing computed as 0.002 times the gross concrete section
6. Units for Flexure Design Table:

Depth to Reinforcement	(in.)
Ultimate Moment	(in.-kip/ft)
Ultimate Thrust	(kip/ft)
Ultimate Flexural Reinforcing	(in.^{2}/ft)
Governing Reinf. Area	(in.^{2}/ft)

******* SHEAR DESIGN METHOD 1 - AASHTO *******

Location	Ultimate Shear (kip/ft)	Allowable Shear (kip/ft)	Diagonal Tension Index	Depth to Reinf. (in.)	Stirrups Required?
12	5.2	9.1	.57	6.34	No
13	5.2	9.1	.57	6.34	No
14	1.5	9.1	.16	6.34	No
15	1.5	9.1	.16	6.34	No
16	1.5	9.1	.16	6.34	No
17	1.5	9.1	.16	6.34	No
18	4.5	9.1	.50	6.34	No
19	4.5	9.1	.50	6.34	No

Concrete shear strength taken as 2 times the square root of f'c, f'c in psi.

BOX CULVERT DESIGN SUMMARY SHEET
4.00 ft Span x 4.00 ft Rise

****

INSTALLATION DATA

Height of Fill Over Culvert, ft	2.00
Soil Unit Weight, pcf	120.
Minimum Lateral Soil Pressure Coefficient	0.125
Maximum Lateral Soil Pressure Coefficient	0.500
Soil-Structure Interaction Factor	1.075
Installation Type	Embankment/Compacted

LOADING DATA

Design Specification	AASHTO Standard
Dead Load Factor - Moment and Shear	1.30
Dead Load Factor - Thrust	1.00
Live Load Factor - Moment and Shear	2.17
Live Load Factor - Thrust	1.00
Dead Load Modifier - Moment and Shear	1.00
Dead Load Modifier - Thrust	1.00
Live Load Modifier - Moment and Shear	1.00
Live Load Modifier - Thrust	1.00
Strength Reduction Factor-Flexure	0.90
Strength Reduction Factor-Diagonal Tension	0.85
Live Load	
Live Load Type	AASHTO Interstate/HS
Live Load Magnitude, kips	24.0
Tire Footprint Length, in.	1.0
Tire Footprint Width, in.	1.0
Live Load Distribution Factor	1.75
Direction of travel	Parallel to span
Impact Factor	1.10
Lane Load, psf	0.0

MATERIAL PROPERTIES

Minimum Specified Reinforcing Yield Strength, ksi	65.0
Concrete - Specified Compressive Strength, ksi	5.0

GEOMETRY

Top Slab Thickness, in.	8.0
Side Wall Thickness, in.	8.0
Bottom Slab Thickness, in.	8.0
Top Horizontal Haunch Dimension, in.	0.0
Bottom Horizontal Haunch Dimension, in.	0.0
Top Vertical Haunch Dimension, in.	0.0

G E O M E T R Y (Continued)

Bottom Vertical Haunch Dimension, in.	0.0
Concrete Cover Over Steel, in.	
Top Slab - Outside Face	1.50
Bottom Slab - Outside Face	1.50
Side Wall - Outside Face	1.50
Top Slab - Inside Face	1.50
Bottom Slab - Inside Face	1.50
Side Wall - Inside Face	1.50

R E I N F O R C I N G D A T A

LOCATION	AREA (in.²/ft)	STIRRUPS REQUIRED?
TRANSVERSE		
Side Wall - Outside Face (AS1)	0.192	No
Top Slab - Inside Face (AS2)	0.232	No
Bottom Slab - Inside Face (AS3)	0.192	No
Side Wall - Inside Face (AS4)	0.192	No
Top Slab - Outside Face (AS7)	0.192	No
Bottom Slab - Outside Face (AS8)	0.192	No

Notes:

1 Top slab outside face steel(AS7) must extend completely across the top slab. The sidewall outside face steel (AS1) must be bent at the corner and extended across the top slab sufficiently to meet AASHTO requirements for tension laps.

2 Bottom slab outside face steel (AS8) must extend completely across the bottom slab. The sidewall outside face steel (AS1) must be bent at the corner and extended across the bottom slab sufficiently to meet AASHTO requirements for tension laps.

3 Negative moment may exist in the entire top slab

4 Negative moment may exist in the entire bottom slab

COMMONWEALTH OF VIRGINIA
THOMAS LAWRENCE
NO. 022827
09-28-2005
PROFESSIONAL ENGINEER

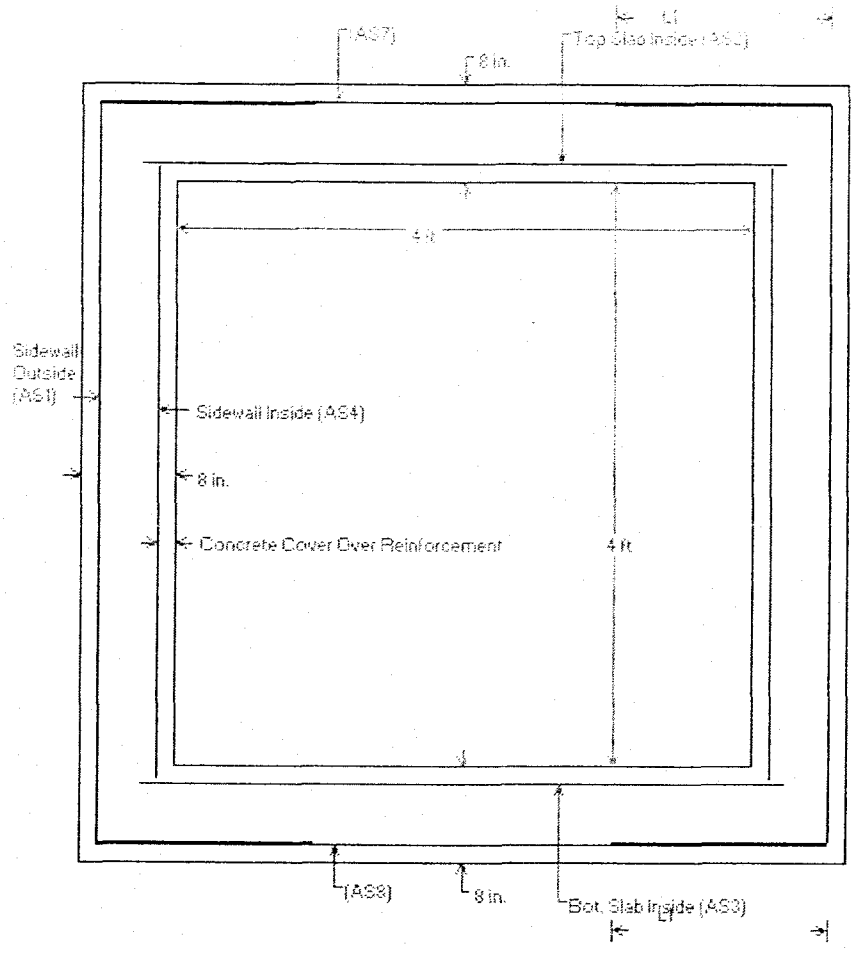

* <L1> is Splice Length
* (AS7) is Top Slab Outside
* (AS8) is Bottom Slab Outside
* See Box Culvert Design Summary Sheet for transverse and distribution reinforcement, as required.
* For sidewall thicknesses of 6 in. and above, extend AS2 and AS3 a min. of 4 in. beyond the inside face of the sidewall. For thicknesses less than 6 in., extend AS2 and AS3 at least to within 1-1/2 in. of the outside face of the sidewall.

Notes:

1) Other reinforcement schemes that provide the required reinforcement areas at all locations identified in the program output are acceptable.
2) Longitudinal reinforcement is not shown for clarity, see AASHTO M259 for longitudinal reinforcement and for additional requirements.

Geometry:

	Use		Defaults	
RCB Rise	4	Feet	6	Feet
Type (I,II)	I		I	
Slope (_:1)	2:1		2	
Wing Angle	45°		45°	
Scour Depth	30"			
Curtain Style	CIP			

[see Stability for Lt and Lh]

Stem Dim's:	feet	inches			inches
Wing Hgt, K	5.50'	66"	5.50'	OverAllHgt	74"
Wing Width, M	10.00'	120"	11.00'	OverAllWidth	132"
Tip Hgt, L	1.75'	21"	1.83'		

Thichnesses:	inches		Increments:	Use	Defaults
Toe, Ttoe	8"	8"	Min Heel	6"	6"
Heel, Th	8"	8"	Heel Incr	6"	6"
Stem, Ts	8"	8"			
			Min Toe	8"	8"
			Toe Incr	8"	8"
			Th Incr	4"	4"

WingAngle RAD	0.785398	cos	sin	Degrees
SigmaNormal	0.339837	0.942809	0.333333	19.471°
SigmaParrallel	0.339837	0.942809	0.333333	19.471°
(Sloped) FillHgt	80.36"	(varies with Lh)		

COMMONWEALTH OF VIRGINIA
THOMAS LAWRENCE
NO. 022827
9-28-2005
PROFESSIONAL ENGINEER

Design Parameters:

Installation

	Use		Defaults
LLsur Hsur	0		0
rhoE	120	pcf	120
Ka	0.25		0.25
Kp	4		4.00
Hp	0		0.00
mu Sliding	0.5		0.50
Min FSot	2.00		2.00
Min FSs	1.50		1.50
Pmax	3000	psf	3000

Reinf Conc Design

rhoC	150	pcf	150
fc	4000	psi	4000
fy	60000	psi	60000
Es	29000000	psi	29000000
Ec	3604997	psi	3604997
Zmax	98	kips/in	

External Wts and Forces:

WtStemVoid	-Ts * (WingHgt - TipHgt) * WingWidth / 12 ^ 3 * rhoC
	-3750 LBs (void not used in stability)
WtStem	Ts * OAH * WingWidth / 12 ^ 3 * rhoC
	6167 LBs
WtHeel	Lh * Th * WingWidth / 12 ^ 3 * rhoC
	1500 LBs
WtToe	Lt * Ttoe * WingWidth / 12 ^ 3 * rhoC
	667 LBs
WtCol	0 LBs
WtBWW	8333 LBs

Overturning Forces:

OTfSur	= Ka * rhoE * Hsur * OAH * WingWidth / 12 ^ 3
	0 LBs
OTfFill	= 0.5 * Ka * rhoE * FillHgt * FillHgt * WingWidth / 12 ^ 3 * cos(SigmaNormal)
	6343 LBs
OTfPassive	0 LBs
SlidingForce	6343 LBs

Resisting Force of Sloped Fill:

RfFill	= 0.5 * Ka * rhoE * FillHgt * FillHgt * WingWidth / 12 ^ 3 * sin(SigmaNormal)
	2242 LBs

Fill Wts:

WtFillOnHeel	Lh * (OAH - Th + Hsur) * WingWidth / 12 ^ 3 * rhoE
	9900 LBs
WtSlopedFillOnHeel	Lh * Lh * TAN(SigmaNormal) / 2 * WingWidth / 12 ^ 3 * rhoE
	477 LBs
WtFillOnToe	0 LBs
Resultant	20953 LBs

External Moments:

[Moments taken about Bottom-Front Edge of Toe]

Overturning Moments:

OTfSur	0 LBs	
yrSurcharge = OAH		
	74"	
MotSur	0 in-kips	
OTfFill	6343	
yrFill	FillHgt / 3	
	27"	
MotFill	170 in-kips	
OTfPassive	0	
yrPassive = Hp / 3		
yrPassive	0	
MotPassive =	0	
Mot = = MotFill + MotPassive		
Mot =	170 in-kips	

Resisting Moments:

xrRfFill = Lt + Ts + Lh		
	34"	
MrRfFill	76 in-kips	
xrFillOnHeel = Lt + Ts + Lh / 2		
	25"	
MrFillOnHeel	248 in-kips	
xrSlopedFillOnHeel = Lt + Ts + Lh * 2 / 3		
	28"	
MrSlopedFillOnHeel	13	
xrFillOnToe	4"	
MrFillOnToe	0 in-kips	
Mresist =	451 in-kips	

Wing Wt Moments:
(centriods)

xrHeel	= Lt + Ts + Lh / 2	25"
yrHeel	= Th / 2	4"
xrStem	= Lt + Ts / 2	12"
yrStem	= OAH / 2	37"
xrToe	= Lt / 2	4"
yrToe	= Ttoe / 2	4"
xrCol	0	
yrCol	0	
MrHeel	38	
MrStem	74	
MrToe	3	
MrCol	0	
MrWt	114 in-kips	
cgx =	MrWt/WtBWW	13.7
MyHeel	6	
MyStem	228	
MyToe	3	
MyCol	0	
MyWt	237 in-kips	
cgy =	MyWt/WtBWW	28.42

Stability:

Lh = 18 [iterate Lh]
Lt = 8
OverAllLength = 34

Overtuning:

Fsot = Mresist / Mot
= 2.66 OK

Sliding:

FSs = muS * Resultant / SlidingForce
= 1.65 OK

Bearing Pressure:

xr = = (Mresist + MrFillOnToe - Mot) * 1000 / (Resultant + WtFillOnToe)
= 13.42841

e = 3.571592

eIndex = 0.630281 if Abs(eIndex) > 1, Pressure Distribution is Trianglar
if Abs(eIndex) <= 1, Pressure Distribution is Trapezoidal

Ptri = 2 * (Resultant + WtFillOnToe) / (3 * xr / 12 * WingWidth / 12)
= 1248
Ptrap = (Resultant + WtFillOnToe) / (OAL / 12 * WingWidth / 12) * (1 + 6 * ABS(e) / OAL)
= 1206

P = 1206 psf
OK

Internal Forces:

CCORs = 1.50"
d = Ts - CCORs - 0.25
= 6.24"
b = 12.00"

BetaE = 1.30
DLfmv = 1.30
DLfn = 1.00
UF = 12 inches per Unit foot

Mu = Lh / OAL * Mot * BetaE * DLfmv / WingWidth * UF
= 15.2 in-kips/LF

(see Reinf Design)

Vu = Lh / OAL * Resultant * BetaE * DLfmv / WingWidth * UF
= 1875 LBs/LF

Vc = 0.85 * 2 * SQRT(fc) * b * d
= 8051 LBs/LF

Shear Index, Vu/Vc = 0.23 OK

Reinforcement Design Calculations:

AsFlex = (g * phif * d - Nu - SQR(g * (g * (phif * d)^2 - Nu * (2 * phif * d -h) - 2 * Mu))) / fy
where g = 0.85 * b * fc = 40800 fc = 4000 fy = 60000

b = 12" phif = 0.9 PI = 3.141593

Es = 29,000,000 psi (non-prestressed) Ec = 57000*Sqrt(fc) = 3,604,997 n = Es/Ec = 8.04 z = 98

RCB Wing Wall

As = 0.393 1 @ D20.0 @ 6" plus none

		Ms =	9 in-kips
h =	8 in	Mu =	15 in-kips
d =	6.24 in	Nu =	0 kips

AsFlex =	0.045 Sqin/LF	rhoRf =	0.001
		MaxSpa =	4.31"
Qty #4 / LF =	0.2 Bars		
Qty #5 / LF =	0.1 Bars		
Qty #6 / LF =	0.1 Bars		
As D20.0 @ 6" =	0.393 Sqin/LF	use:	1
Add'l Qty #4 / LF =	-1.8 Bars	or = #4 @	-6"
Add'l Qty #5 / LF =	-1.1 Bars	or = #5 @	-6"
Add'l Qty #6 / LF =	-0.8 Bars	or = #6 @	-12"
		use #0 @	0"

use: 1 @ D20.0 @ 6" plus none

		AsProvide =	0.393 Sqin/LF
rhoRfp =	0.005	MaxSpa =	12.00"

RECEIVED
OCT 10 2005
BY:

AMERICAST

DIST. PARK
WEST POND
PC 106

Wednesday, September 28, 2005
George Nice & Sons, Inc.
143 Skimino Road
Williamsburg, VA 23188
Voz: (757) 565-2885
Fax: (757) 565-1526

102 07

RECEIVED
NOV 16 2005
ENVIRONMENTAL DIVISION

Re: Americast Job D7079
Warhill Site
James City Co., VA
Str: RCB-4x4

ATTN:

Accompanying are submittal details for the above project (see Document List).
Please return one copy each with the engineer's comments or approval.

Please verify locations, directions and elevations. If needed, adjustments to meet field conditions to be performed in field, by others.

We understand that the 7'x 7' SWM Inlet/Outfall Box will be cast in place, by others. We intend to provide 6"± of exposed steel to facilitate the connection to the CIP.

Respectfully,

Thomas Lawrence, PE
Americast
tlawrence@AmericastUSA.Com

Document List

Drawings:

PD	RCB Project Data Double 4'x4' RCB.
LO	Layout Detail 36' Single 4'x4' RCB with 0° Skew and Precast Wing Walls.
Std	Standard Section Detail Single 4'x4'.
Pc 1	Outlet Detail Single 4'x4' RCB with 0° Skew and Precast Parapet.
Pc 5	Inlet Detail Single 4'x4' RCB with 0° Skew and Exposed Steel.
HW-ES	RCB Headwall and End Section Details.
Curtain	Cast In Place Curtain Wall.
BWW-L	4' Rise RCB Wing Wall 2:1 Slope, Type I, 45°L Wing Angle.
BWW-R	4' Rise RCB Wing Wall 2:1 Slope, Type I, 45°R Wing Angle.
BWW RS	RCB Wing Wall Reinforcement Section.
RS	RCB Reinforcement Section Single 4'x4' VDOT-ASTM C1433 Alt-I for 2'-5' Fill.
RD	RCB Reinforcement Detail Single 4'x4' VDOT-ASTM C1433 Alt-I for 2'-5' Fill.

Calculations:

S0404V205	Single 4'x4' RCB VDOT-ASTM 1433 Alt-I for 2'-5' Fill
BWW-21-4'-45°	RCB Wing Wall Design 2:1 Type I 45° Wing Angle.

Weights	Marking Instructions	STD Marking
Pc 1: 11,700 LBs 3 Stds: 16,000 LBs/Ea Pc 5: 11,800 LBs Pc LW1: 7,100 LBs Pc RW1: 7,100 LBs	Stencil all RCB Sections with information listed under STD Marking. Use Waterproof Paint. Plae label on inside & outside of sidewall. The word "TOP" shall be placed on the inside top surface.	GEORGE NICE & SONS WARHILL SITE JAMES CITY CO., VA VDOT-ASTM C1433 4'x4' RCB ALT-I 2'-5' FILL MANUFACTURE DATE ASHLAND PLT PC #

Shipping List – Piece Decriptions

Pc 1: Precast Headwall Parapet x Bell End Section.
Pc 2: Standard Section.
Pc 3: Standard Section.
Pc 4: Standard Section.
Pc 5: Spigot x Exposed Steel End Section

(20) Lifthole Plugs

LW1: BWW-21-4'-45°L RCB Wing Wall
RW1: BWW-21-4'-45°R RCB Wing Wall

Concrete Volumes

Pc 1: 2.691 CY RCB + 0.198 HW
3 Stds: 3.951 CY/Ea
Pc 5: 2.896 CY RCB

Pc LW1: 1.743 CY
Pc RW1: 1.743 CY

HANDLING INFORMATION

AMERICAST WILL FURNISH ONLY THE ITEMS LISTED BELOW FOR HANDLING AND ASSEMBLY OF THE PRECAST COMPONENTS. THESE ITEMS MUST BE RETURNED OR AN INVOICE WILL BE ISSUED.

(8) 1-1/4" DOUBLE SWIVEL LIFT PLATES
(4) 1-1/4" x 20" LONG COIL RODS
(4) 1/2" x 4" x 4" PLATE WASHERS
(12) 1-1/4" COIL NUTS
(4) 1-1/4" x 12" LONG COIL RODS
(2) 2 TON COME-A-LONGS

RCB Project Data
Single 4'x4' RCB.

AMERICAST®
A Division of VALLEY BLOX, Inc.

Harrisonburg Plant
210 Stone Spring Road
Harrisonburg, VA 22801
1-800-648-2278

Halltown Plant
PO Box 120
Halltown, WV 25423
1-800-648-4580

Ashland Plant
11352 Va. Precast Rd
Ashland, VA 23005
1-800-999-2278

			Date	By/Chk
For:	G Nice	Original:	09-28-2005	TL
Job:	Warhill Site James City Co., VA	Last Rev:		
		Scale:	0/0" = 1'-0"	
Str: RCB-4x4	Contract: D7079	Drw Num:	PD	

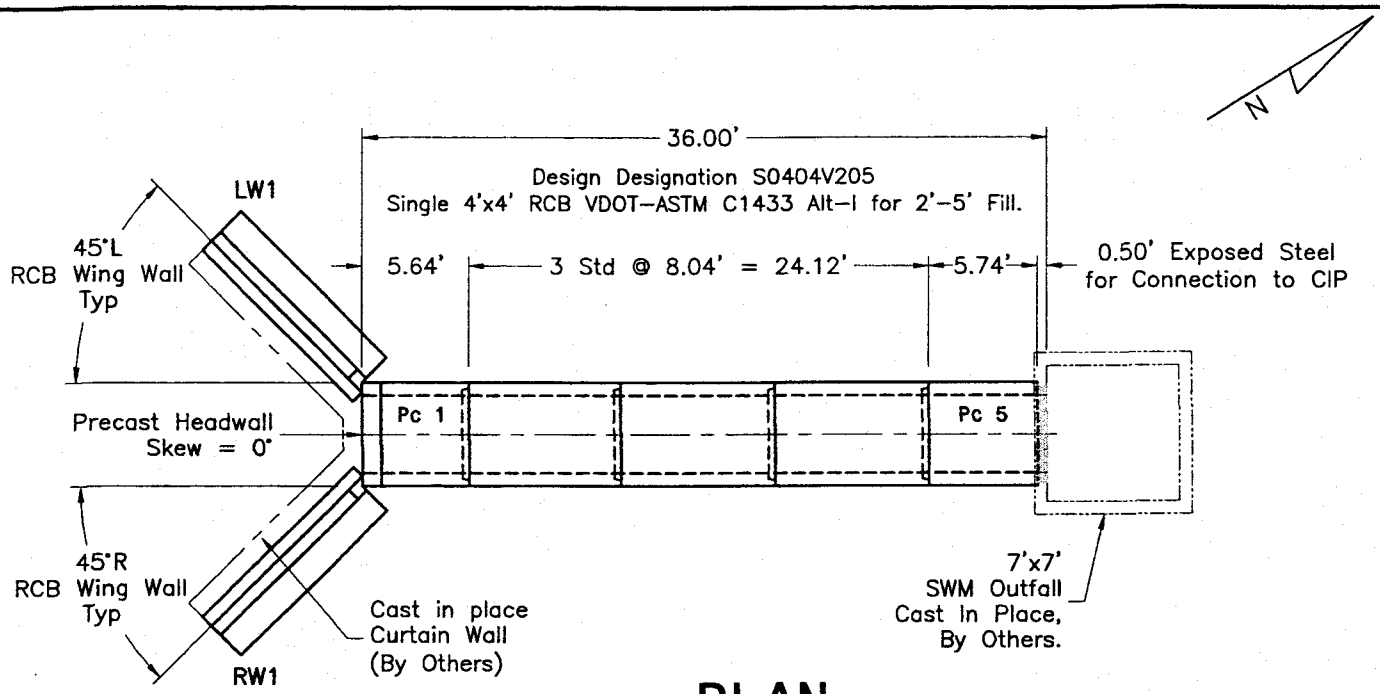

PLAN

LAY
Inv. Out = 57.00'

FLOW
Inv. In = 57.36'

Note:

1) RCB joints to be sealed in accordance with project plans and state specifications.
   1"x1" Closed Cell Neoprene attached to RCB tongue shoulder at plant unless noted.
   All handling points must be sealed with elastomeric plugs and/or non-shink grout.

2) Installation criteria to be in accordance with AASHTO Division II Section 27
   and state specifications. Bedding to be 6" aggregate minimum.
   Install RCB sections bells ahead upstream unless noted.
   Pull joints together to 1/2" average gap (-1/2", +1/4), 3/4" max. gap.

3) Adjoining cast in place concrete (by others), if any, to be in accordance with
   project plans and state specifications.

4) This drawing supplied only as a guide; adjustment to meet field conditions must be
   made, by others, as needed.

Seal for Precast Only

COMMONWEALTH OF VIRGINIA
THOMAS LAWRENCE
NO. 022827
09-28-2005
PROFESSIONAL ENGINEER

Layout Detail
36' Single 4'x4' RCB with 0° Skew and Precast Wing Walls.

AMERICAST®
A Division of VALLEY BLOX, Inc.

Harrisonburg Plant
210 Stone Spring Road
Harrisonburg, VA 22801
1-800-648-2278

Halltown Plant
PO Box 120
Halltown, WV 25423
1-800-648-4580

Ashland Plant
11352 Va. Precast Rd
Ashland, VA 23005
1-800-999-2278

			Date	By/Chk
For:	G Nice	Original:	09-28-2005	TL
Job:	Warhill Site James City Co., VA	Last Rev:		
		Scale:	1" = 10'	
Str: RCB-4x4	Contract: D7079	Drw Num:	LO	

Upper Liftholes may be reproduced in bottom slab for stripping.

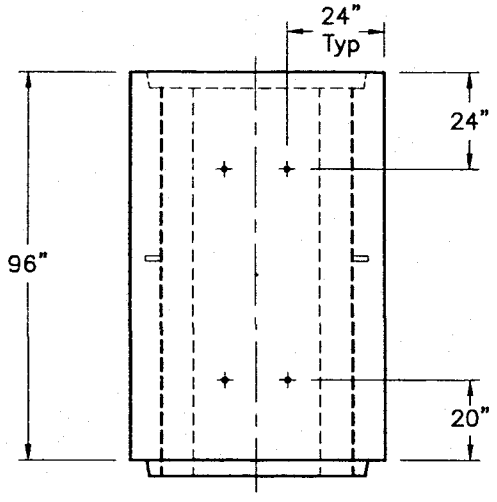

Top View

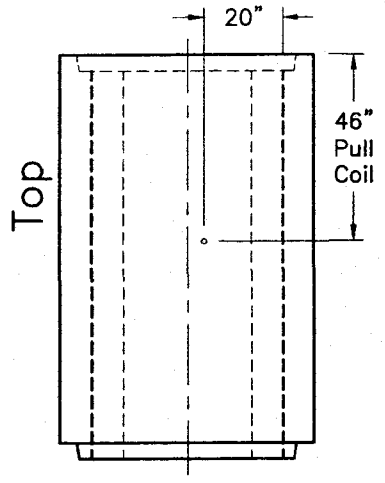

Side - Elev

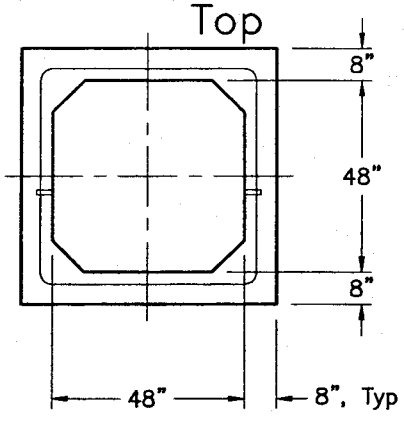

End - Elev

Pc: 2 thru 4 (3 stds req'd)
Desc: S-4x4 Standard Section
Spec: VDOT Alt-I 2'-5' Fill.
LL: 8.04'
Wt: 16,000 LBs
RCB CY: 3.951 CY

5000 psi minimum

Seal for Precast Only

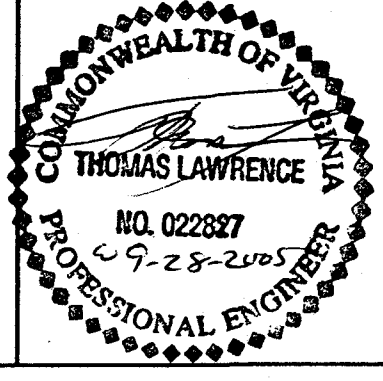

Note:
1) Liftholes to be 1 1/2" Ø PVC for 1 1/4" Double Lift Plate Assembly. Lift Code "A".

2) Pull Coils to be 1 1/4"Ø Threaded Coil Inserts for
1 1/4"Ø Threaded Rod and 1 1/4" Double Swivel Lift.

Standard Section Detail
Single 4'x4' RCB.

AMERICAST®
A Division of VALLEY BLOX, Inc.

Harrisonburg Plant
210 Stone Spring Road
Harrisonburg, VA 22801
1-800-648-2278

Halltown Plant
PO Box 120
Halltown, WV 25423
1-800-648-4580

Ashland Plant
11352 Va. Precast Rd
Ashland, VA 23005
1-800-999-2278

			Date	By/Chk
For:	G Nice	Original:	09-28-2005	TL
Job:	Warhill Site James City Co., VA	Last Rev:		
		Scale:	1/4" = 1'-0"	
Str: RCB-4x4	Contract: D7079	Drw Num:	Std	

Upper Liftholes may be reproduced in bottom slab for stripping.

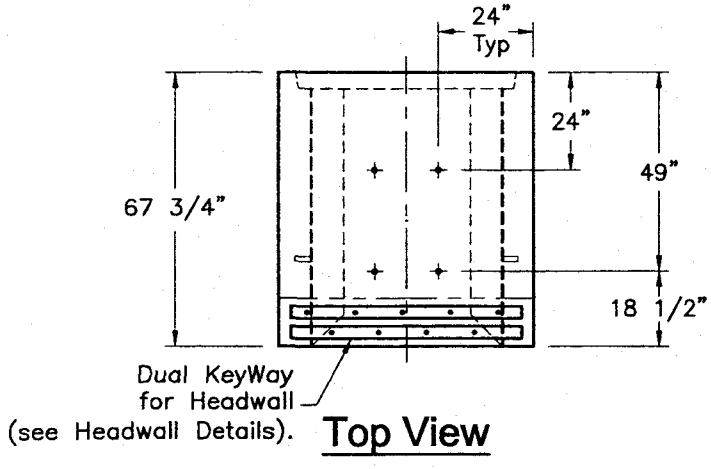

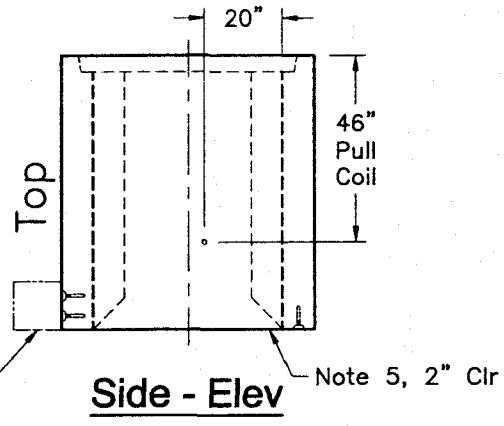

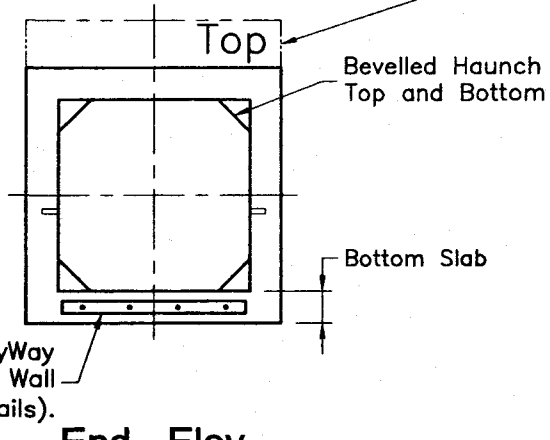

Pc: 1
Desc: S-4x4 End Section
Spec: VDOT Alt-I 2'-5' Fill.
LL: 5.64'
Wt: 11,700 LBs
RCB CY: 2.691 CY
Headwall: 0.198 CY

5000 psi minimum

Seal for Precast Only

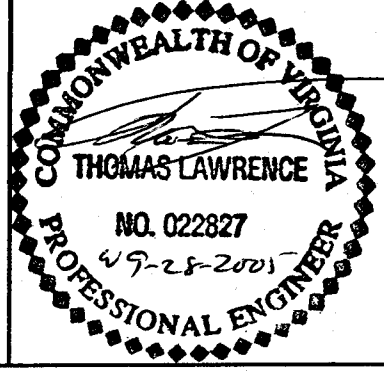

Note:
1) Liftholes to be 1 1/2" Ø PVC for 1 1/4" Double Lift Plate Assembly. Lift Code "A".

2) Pull Coils to be 1 1/4"Ø Threaded Coil Inserts for 1 1/4"Ø Threaded Rod and 1 1/4" Double Swivel Lift.

3) See Headwall Details for Headwall Parapet Reinforcement.

4) Headwall Parapet to be Secondary Pour, 4000 psi minimum concrete.

5) Provide finished face with 2" Clr minimum. Outlet to receive Bevelled Haunches.

Outlet Detail
Single 4'x4' RCB with 0° Skew and Precast Parapet.

AMERICAST®
A Division of VALLEY BLOX, Inc.

Harrisonburg Plant
210 Stone Spring Road
Harrisonburg, VA 22801
1-800-648-2278

Halltown Plant
PO Box 120
Halltown, WV 25423
1-800-648-4580

Ashland Plant
11352 Va. Precast Rd
Ashland, VA 23005
1-800-999-2278

For: G Nice		Date	By/Chk
	Original:	09-28-2005	TL
Job: Warhill Site James City Co., VA	Last Rev:		
	Scale:	1/4" = 1'-0"	
Str: RCB-4x4	Contract: D7079	Drw Num:	Pc 1

Upper Liftholes may be reproduced in bottom slab for stripping.

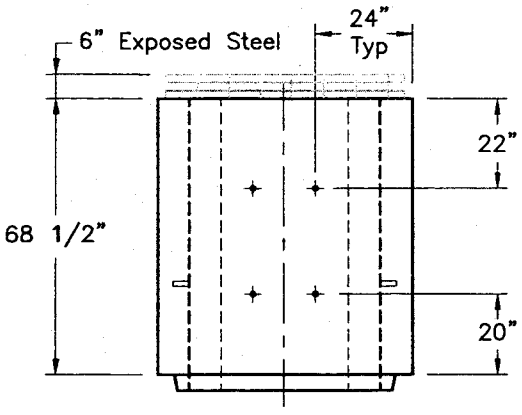

Top View

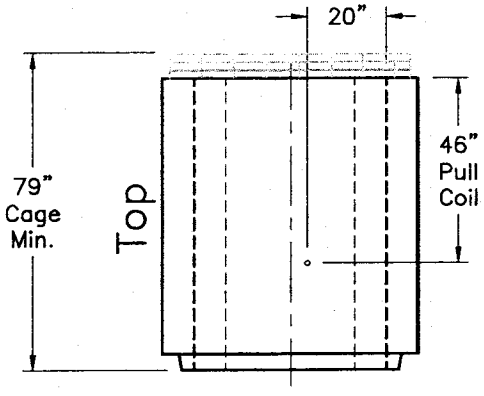

Side - Elev

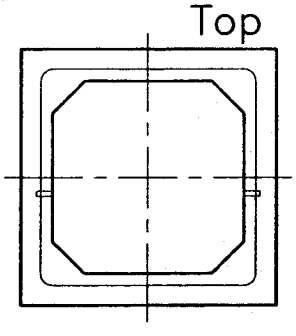

End - Elev

Pc: 5
Desc: S-4x4 End Section
Spec: VDOT Alt-I 2'-5' Fill.
LL: 5.74'
Wt: 11,800 LBs
RCB CY: 2.896 CY
Headwall: 0.000 CY

5000 psi minimum

Seal for Precast Only

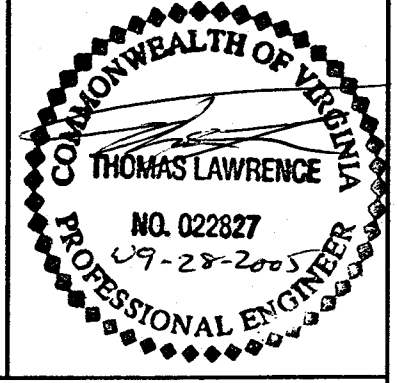

Note:
1) Liftholes to be 1 1/2" Ø PVC for 1 1/4" Double Lift Plate Assembly. Lift Code "A".

2) Pull Coils to be 1 1/4"Ø Threaded Coil Inserts for
1 1/4"Ø Threaded Rod and 1 1/4" Double Swivel Lift.

3) Provide 6" exposed steel for connection to cast in place.

Inlet Detail
Single 4'x4' RCB with 0° Skew and Exposed Steel.

AMERICAST®
A Division of VALLEY BLOX, Inc.

Harrisonburg Plant
210 Stone Spring Road
Harrisonburg, VA 22801
1-800-648-2278

Halltown Plant
PO Box 120
Halltown, WV 25423
1-800-648-4580

Ashland Plant
11352 Va. Precast Rd
Ashland, VA 23005
1-800-999-2278

For: G Nice

Job: Warhill Site
James City Co., VA

Str: RCB-4x4 | Contract: D7079

	Date	By/Chk
Original:	09-28-2005	TL
Last Rev:		
Scale:	1/4" = 1'-0"	
Drw Num:	Pc 5	

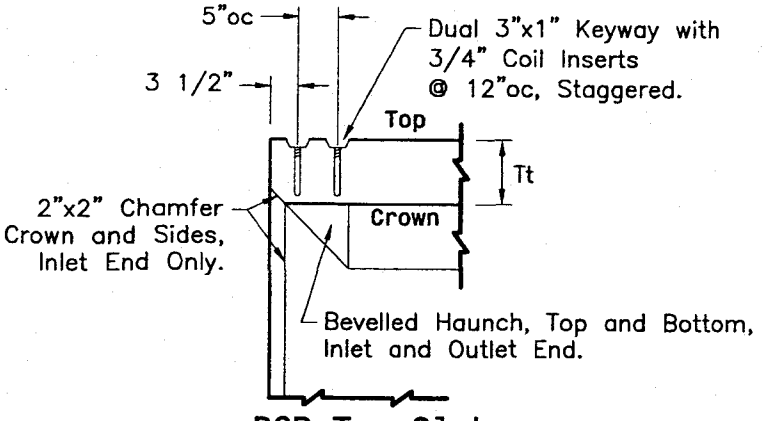

RCB Top Slab End Treatment

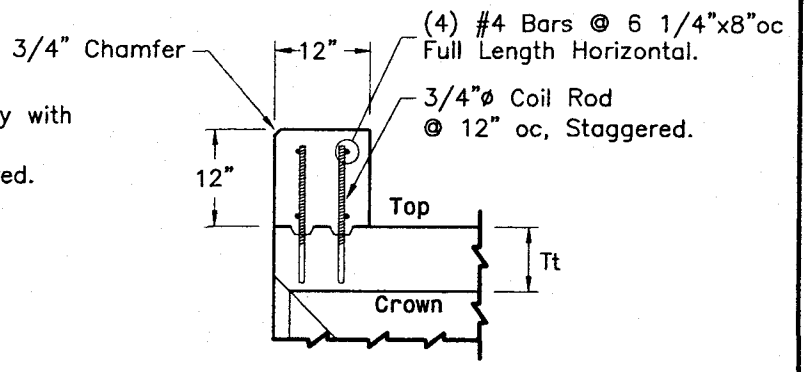

Precast Headwall Parapet

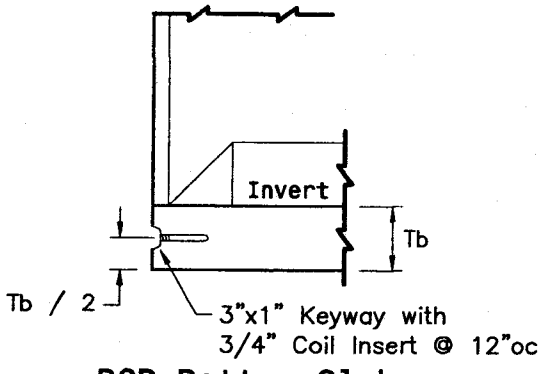

RCB Bottom Slab End Treatment

Note:

1) Inlet to receive 2"x2" Chamfer (Crown and Sides).
   Inlet and Outlet to receive Bevelled Haunches (Top and Bottom).
   3/4" Chamfer at Top-Front edge of Precast Headwall Parapet.

2) Precast Headwall Parapet to be mechanically connected to RCB End Section using 3/4" Coil Rods, supplied and installed by Americast at plant.

3) Secondary pour concrete to be in accordance with project plans and state specifications.
   Material properties: f'c = 4000 psi minimum concrete.

4) Precast Headwall Parapet to match extent and skew of Precast End Section.

5) Concrete Cover Over Reinforcement, CCOR = 2" minimum, unless noted.

Seal for Precast Only

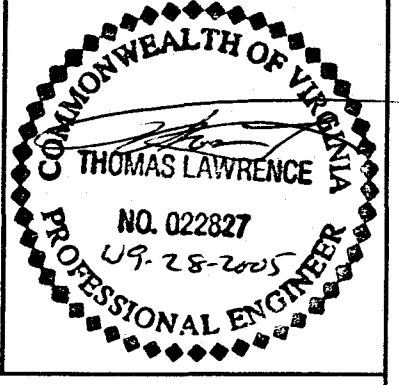

RCB Headwall and End Section Details.

AMERICAST®
A Division of VALLEY BLOX, Inc.

Harrisonburg Plant
210 Stone Spring Road
Harrisonburg, VA 22801
1-800-648-2278

Halltown Plant
PO Box 120
Halltown, WV 25423
1-800-648-4580

Ashland Plant
11352 Va. Precast Rd
Ashland, VA 23005
1-800-999-2278

			Date	By/Chk
For:	G Nice	Original:	07-21-2005	TL
Job:	Warhill Site James City Co., VA	Last Rev:		
		Scale:	1/2" = 1'-0"	
Str: RCB-4x4	Contract: D7079	Drw Num:	HW-ES	

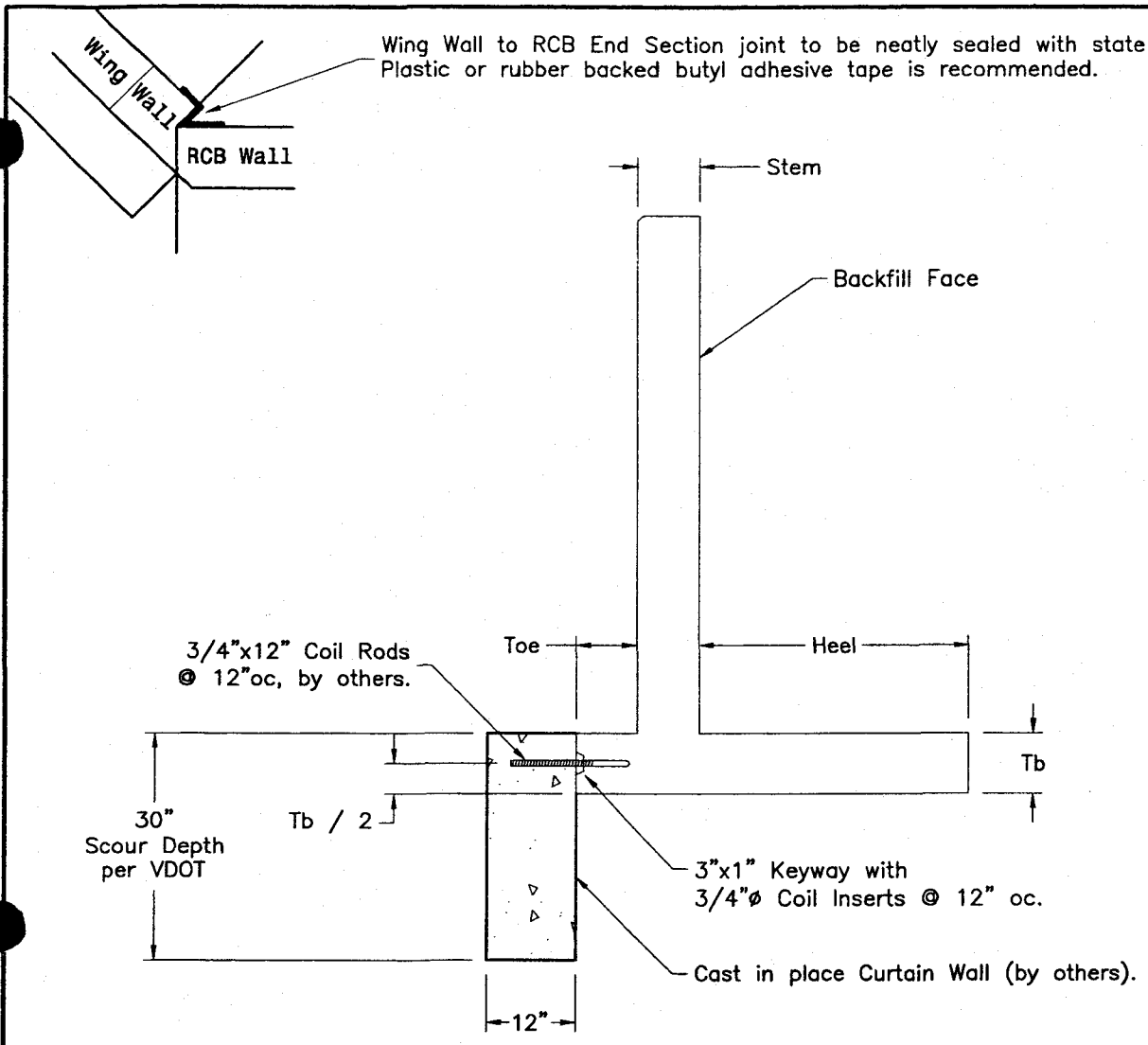

Curtain Wall at Wings

(Similar at RCB Invert)

Note:

1) 3/4" Coil Rods to be supplied and installed in field, by others.

2) Cast in place concrete, by others, to be in accordance with project plans and state specifications. Material properties: f'c = 4000 psi minimum concrete.

3) Cast in place curtain wall to extend 12" from invert face of precast as shown and be continuous from wing tip to wing tip, with expansion joints as needed.

4) Concrete Cover Over Reinforcement, CCOR = 2" minimum, unless noted.

5) Wing Wall to RCB End Section joint to be neatly sealed with state approved sealant. Plastic or rubber backed butyl adhesive tape is recommended.

Seal for Precast Only

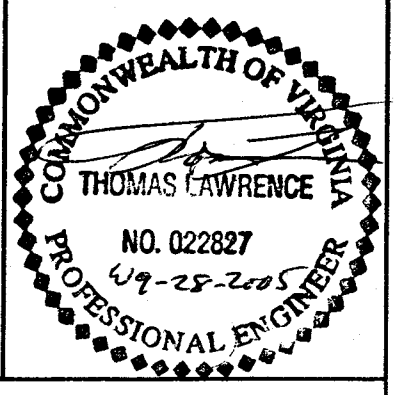

Cast In Place Curtain Wall

AMERICAST®
A Division of VALLEY BLOX, Inc.

Harrisonburg Plant
210 Stone Spring Road
Harrisonburg, VA 22801
1-800-648-2278

Halltown Plant
PO Box 120
Halltown, WV 25423
1-800-648-4580

Ashland Plant
11352 Va. Precast Rd
Ashland, VA 23005
1-800-999-2278

			Date	By/Chk
For:	G Nice	Original:	07-21-2005	TL
Job:	Warhill Site James City Co., VA	Last Rev:		
		Scale:	1/2" = 1'-0"	
Str: RCB-4x4	Contract: D7079	Drw Num:	Curtain	

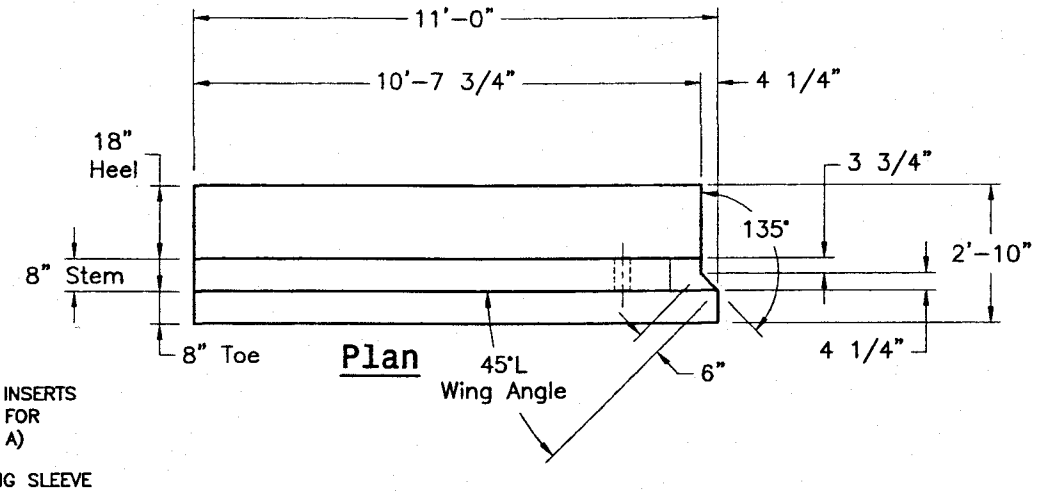

✦ = 1 1/4"ø COIL INSERTS (OPPOSITE FACE) FOR STRIPPING (CODE A)

✖ = 1 1/4"ø LIFTING SLEEVE (LIFT FROM BACK FACE) FOR HANDLING (CODE A)

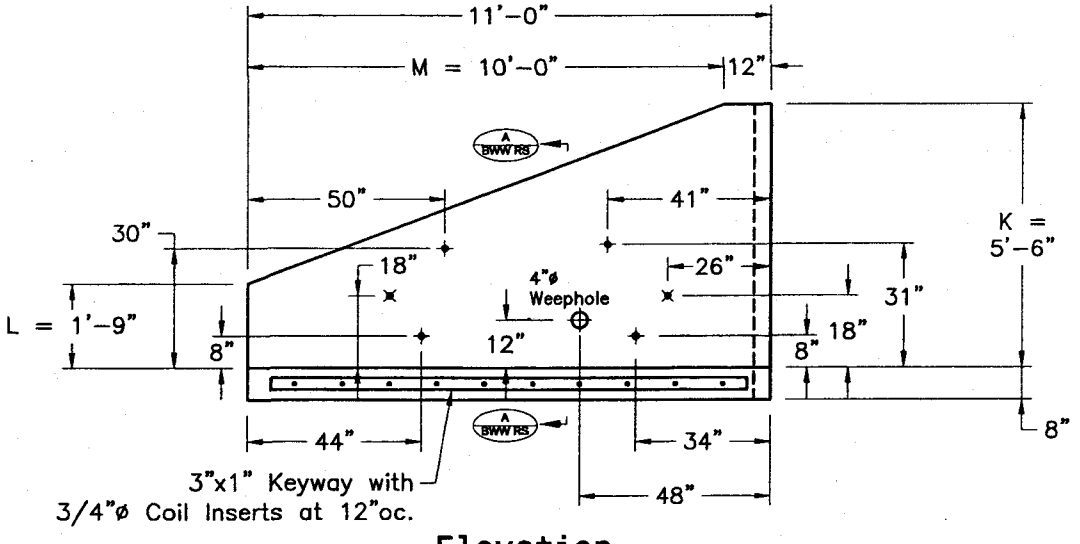

Elevation

Note:

1) Liftholes to be 1 1/4" Ø PVC for 1 1/4" Double Lift Plate Assembly. Lift from back face or both faces for best balance. Lift Code "A".

2) Strip Coils to be 1 1/4"Ø Threaded Coil Inserts. Strip Code "A".

3) See also Reinforcement Section detail BWW RS. Reinforcement to be A615 Deformed Bars or A497 Deformed WWF. Material properties: f'c = 4 ksi, fy = 60 ksi.

4) 3/4" Chamfer on Top-Front edge.

5) Concrete Cover Over Reinforcement, CCOR = 1.5" unless noted. Tolerance on Concrete Cover Over Reinforcement to be -0, +1/2".

Pc: LW1
Desc: BWW-21-4'-45°L
Spec: VDOT
LL: na
Wt: 7,100 LBs
Vol: 1.743 CY

Seal for Precast Only

COMMONWEALTH OF VIRGINIA
THOMAS LAWRENCE
NO. 022827
09-28-2005
PROFESSIONAL ENGINEER

4' Rise RCB Wing Wall
2:1 Slope, Type I, 45°L Wing Angle.

AMERICAST®
A Division of VALLEY BLOX, Inc.

Harrisonburg Plant
210 Stone Spring Road
Harrisonburg, VA 22801
1-800-648-2278

Halltown Plant
PO Box 120
Halltown, WV 25423
1-800-648-4580

Ashland Plant
11352 Va. Precast Rd
Ashland, VA 23005
1-800-999-2278

For: G Nice

Job: Warhill Site
James City Co., VA

	Date	By/Chk
Original:	09-28-2005	TL
Last Rev:		
Scale:	1/4" = 1'-0"	

Str: RCB-4x4 | Contract: D7079 | Drw Num: BWW-L

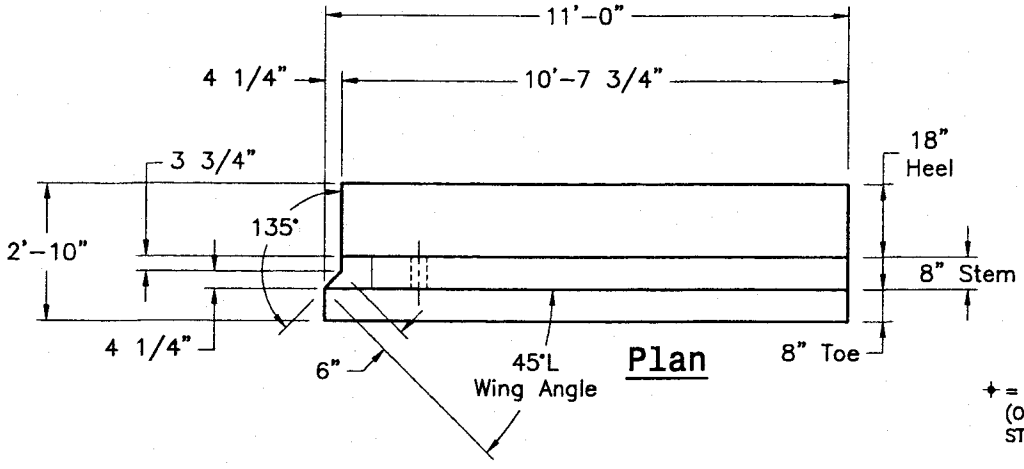

Plan

✦ = 1 1/4"ø COIL INSERTS (OPPOSITE FACE) FOR STRIPPING (CODE A)

✖ = 1 1/4"ø LIFTING SLEEVE (LIFT FROM BACK FACE) FOR HANDLING (CODE A)

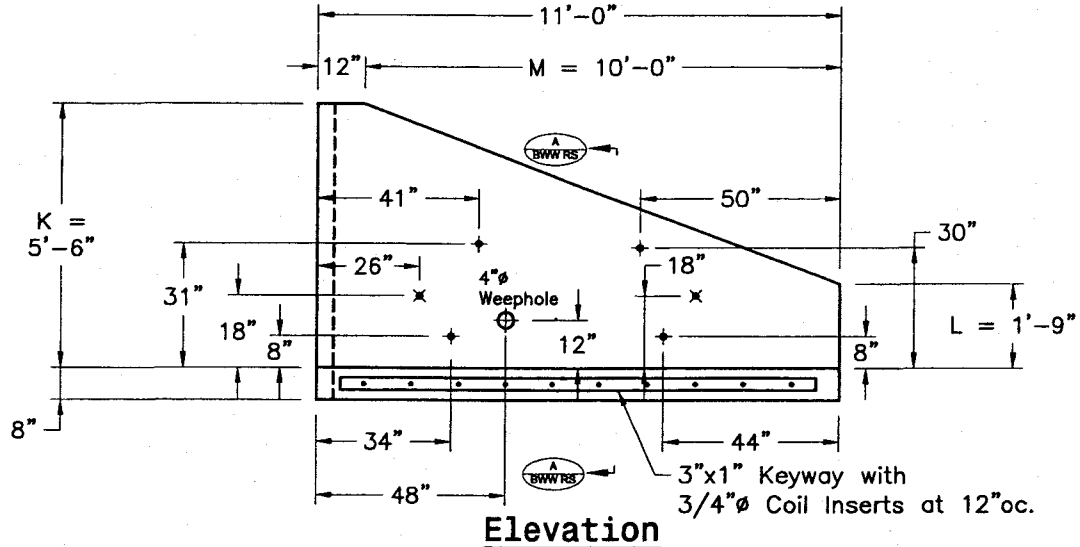

Elevation

Note:

1) Liftholes to be 1 1/4" Ø PVC for 1 1/4" Double Lift Plate Assembly. Lift from back face or both faces for best balance. Lift Code "A".

2) Strip Coils to be 1 1/4"Ø Threaded Coil Inserts. Strip Code "A".

3) See also Reinforcement Section detail BWW RS. Reinforcement to be A615 Deformed Bars or A497 Deformed WWF. Material properties: f'c = 4 ksi, fy = 60 ksi.

4) 3/4" Chamfer on Top-Front edge.

5) Concrete Cover Over Reinforcement, CCOR = 1.5" unless noted. Tolerance on Concrete Cover Over Reinforcement to be -0, +1/2".

Pc: RW1
Desc: BWW-21-4'-45°R
Spec: VDOT
LL: na
Wt: 7,100 LBs
Vol: 1.743 CY

Seal for Precast Only

COMMONWEALTH OF VIRGINIA
THOMAS LAWRENCE
NO. 022827
09-28-2005
PROFESSIONAL ENGINEER

4' Rise RCB Wing Wall
2:1 Slope, Type I, 45°R Wing Angle.

AMERICAST
A Division of VALLEY BLOX, Inc.

Harrisonburg Plant
210 Stone Spring Road
Harrisonburg, VA 22801
1-800-648-2278

Halltown Plant
PO Box 120
Halltown, WV 25423
1-800-648-4580

Ashland Plant
11352 Va. Precast Rd
Ashland, VA 23005
1-800-999-2278

			Date	By/Chk
For:	G Nice	Original:	09-28-2005	TL
Job:	Warhill Site James City Co., VA	Last Rev:		
		Scale:	1/4" = 1'-0"	
Str: RCB-4x4	Contract: D7079	Drw Num:	BWW-R	

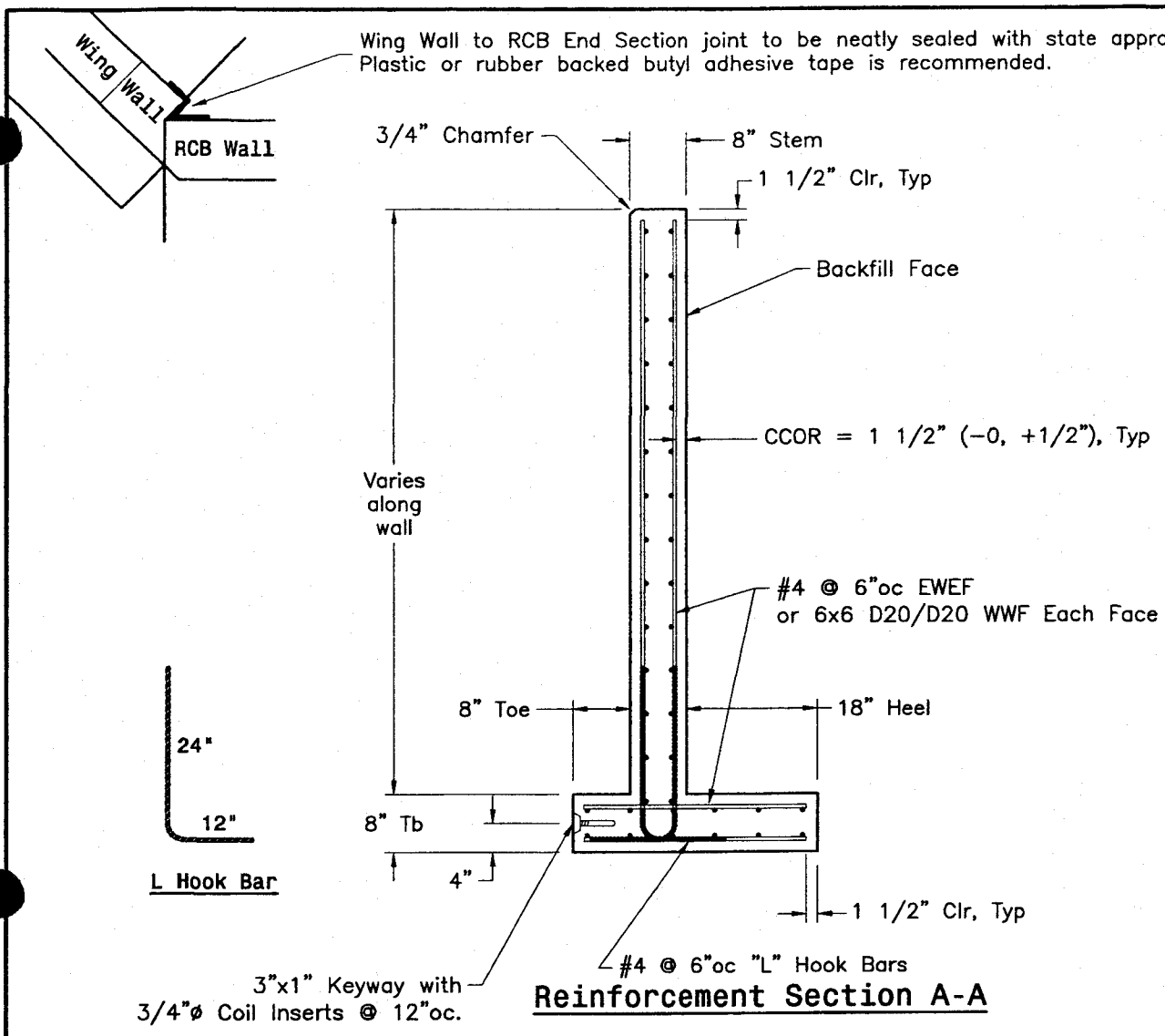

Reinforcement Section A-A

Note:

1) Reinforcement to be ASTM A615 Deformed Bars or ASTM A497 Deformed WWF.
   Material properties: f'c = 4 ksi, fy = 60 ksi.

2) Stem wall reinforcement to be tied to footer bottom reinforcement with "L" Hook Bars.
   Horizontal legs to extend from rear face forward into toe and from front face back into heel.
   If stem wall reinforcement is made from rebar, rebar may be bent at bottom and tied to continuous footer bottom reinforcement.

3) 3/4" Chamfer on Top-Front edge.

4) Concrete Cover Over Reinforcement, CCOR = 1.5" unless noted.
   Tolerance on Concrete Cover Over Reinforcement to be -0, +1/2".

5) Wing Wall to RCB End Section joint to be neatly sealed with state approved sealant.
   Plastic or rubber backed butyl adhesive tape is recommended.

Seal for Precast Only

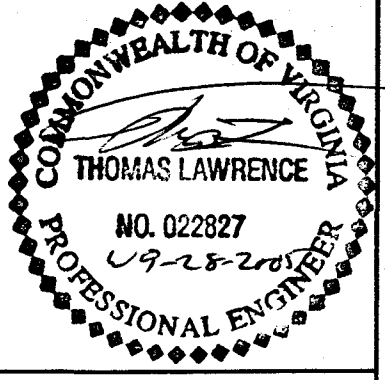

RCB Wing Wall
Reinforcement Section

AMERICAST®
A Division of VALLEY BLOX, Inc.

Harrisonburg Plant
210 Stone Spring Road
Harrisonburg, VA 22801
1-800-648-2278

Halltown Plant
PO Box 120
Halltown, WV 25423
1-800-648-4580

Ashland Plant
11352 Va. Precast Rd
Ashland, VA 23005
1-800-999-2278

For: G Nice		Date	By/Chk
	Original:	09-28-2005	TL
Job: Warhill Site, James City Co., VA	Last Rev:		
	Scale:	1/2" = 1'-0"	
Str: RCB-4x4	Contract: D7079	Drw Num: BWW RS	

Design Requirements: Precast Reinforced Concrete Box Section																			
Design			RCB Geometry					Dimensional Limits of Reinforcement					Circumferential Reinforcement (Sq.In./LF)						
Design Designation	Live Load	Fill Range	Tt	Tb	Twx	Twi	H	Zmt	Zmb	s1	s2	s3	As1	As2	As3	As4	As7	As8	AsC
S0404V205	ALT-I	02-05	8	8	8	8	8	2	2	4	4	4	0.192	0.232	0.192	0.192	0.192	0.192	na
No special notes.																			

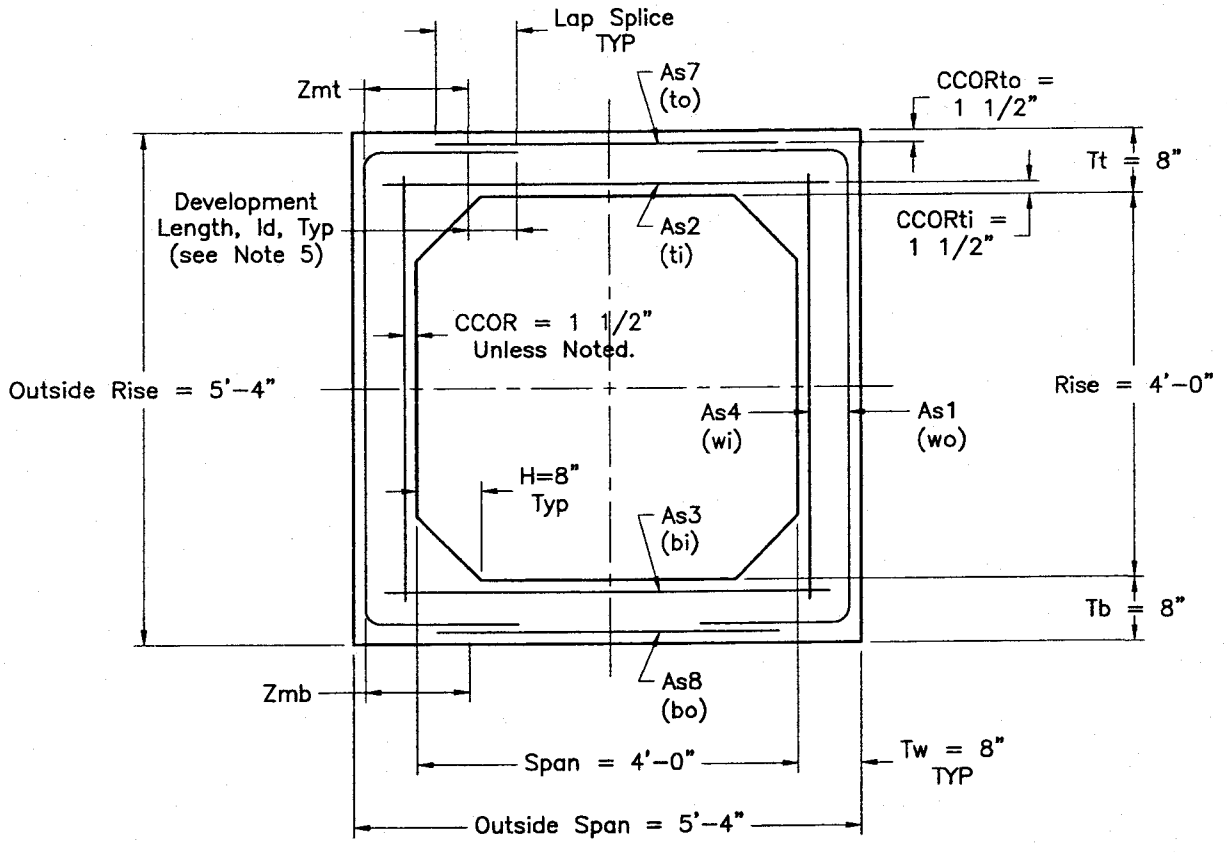

RCB Standard Section

Seal for Precast Only

COMMONWEALTH OF VIRGINIA
THOMAS LAWRENCE
NO. 022827
9-28-2005
PROFESSIONAL ENGINEER

Note:
1) RCB designed in accordance with ASTM C1433 Article 7.2, AASHTO Bridge Specifications Sections 16 and 8. Materials and purchasing in accordance with ASTM C1433. Material properties: f'c = 5 ksi, fy = 65 ksi. Installation criteria: AASHTO Division II Section 27.
2) Concrete Cover Over Reinforcement, CCOR = 1.5". For fills less than 2', top outside CCORto = 2.5", and top inside CCORti = 2.0".
3) Maximum spacings of circumferential wires for As1, As2, and As3 to be s1, s2 and s3 respectively listed in Design Requirements Table. These maximum spacings, limited by design for crack control, may be reduced to 2" minumum.
4) Reinforcement as shown is schematic only. Reinforcement units may be combined and welded wire fabric areas and styles may be substituted provided that the requirements of each unit are met.
5) Development of WWF in accordance with AASHTO Article 8.30; Splices of WWF in accordance with AASHTO Article 8.32, (one space + 2" minimum, more for larger areas).

RCB Reinforcement Section
Single 4'x4' VDOT-ASTM C1433 Alt-I for 2'-5' Fill.

AMERICAST. A Division of VALLEY BLOX, Inc.

Harrisonburg Plant
210 Stone Spring Road
Harrisonburg, VA 22801
1-800-648-2278

Halltown Plant
PO Box 120
Halltown, WV 25423
1-800-648-4580

Ashland Plant
11352 Va. Precast Rd
Ashland, VA 23005
1-800-999-2278

For:	G Nice		
Job:	Warhill Site James City Co., VA		
Str: RCB-4x4	Contract: D7079		

	Date	By/Chk
Original:	09-28-2005	TL
Last Rev:		
Scale:	1/2" = 1'-0"	
Drw Num:	RS	

Reinforcement Unit Summary: WWF Wire Style / Description							Concrete Cover Over Reinforcement
Tag	N @ Astl	Grid	Wire Sizes	Width(+OH) x Length(OH)	OA Length	R'Coat	
As178	1 @ 0.498	2x8	W8.3 / W4.0	94(+1,+0) x 131(1.5,1.5)	[10'-11"OA]	None	CCORto = 1.5" CCORti = 1.5" CCOR = 1.5" CCOR Tolerance: (-0, +1/2")
As234	1 @ 0.498	2x8	W8.3 / W4.0	94(+1,+0) x 131(1.5,1.5)	[10'-11"OA]	None	
Stock Steel							
As1, As7 and As8 integrated into a single unit: As178							Check Component Details for Additional Reinforcement
As2, As3 and As4 integrated into a single unit: As234							

Extension dimensions approximate, Hold Bend Dimensions.
Circumferential Wires toward Face of Concrete.

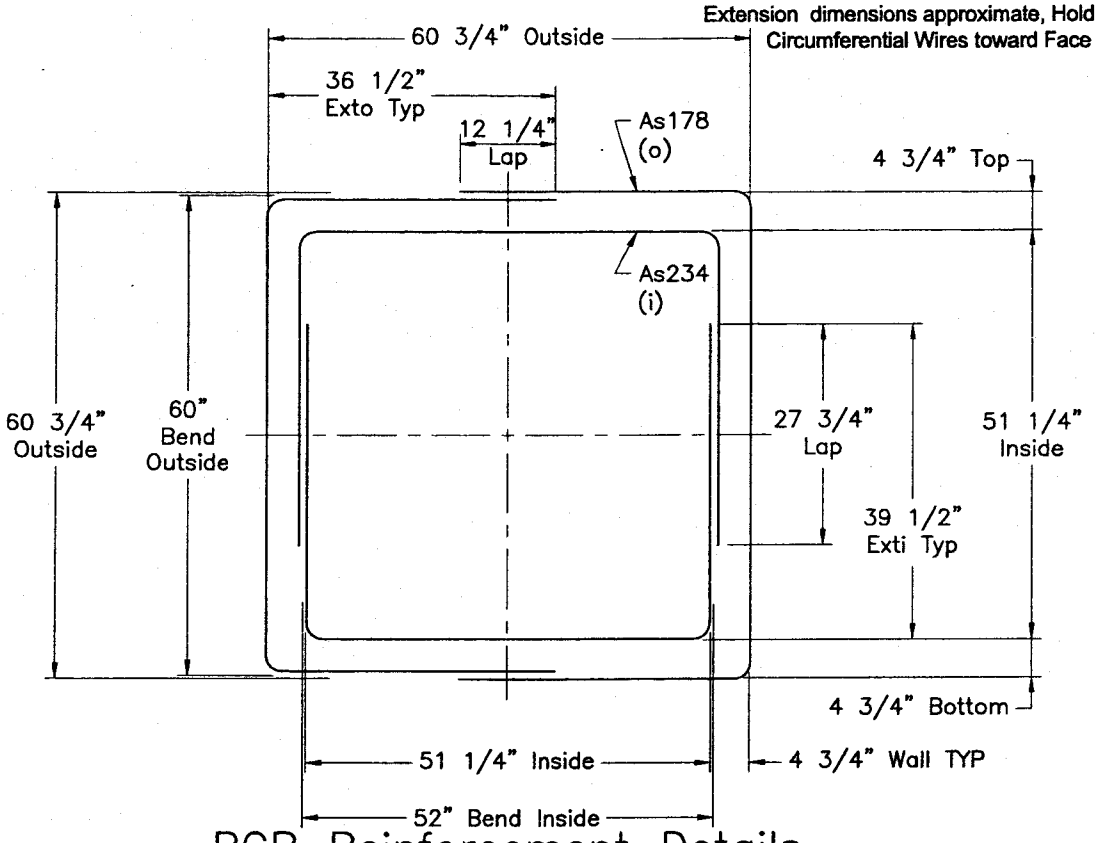

RCB Reinforcement Details

Seal for Precast Only

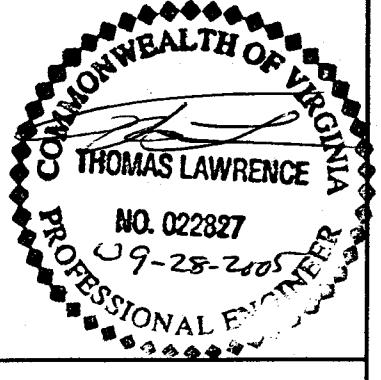

Note:
1) In accordance with ASTM C1433, reinforcement to be A185 Smooth WWF or A497 Deformed WWF. Material properties: f'c = 5 ksi, fy = 65 ksi.
2) Tolerance on Concrete Cover Over Reinforcement to be -0, +1/2".
3) Maximum spacings of circumferential wires for As1, As2, and As3 to be s1, s2 and s3 respectively listed in Design Requirements table. These maximum spacings, limited by design for crack control, may be reduced to 2" minumum.
Spacing of longitudinal wires to be 4" minimum to 8" maximum.
4) Reinforcement as shown is schematic only. Reinforcement units may be combined and welded wire fabric areas and styles may be substituted provided that the requirements of each unit are met.
5) Development of WWF in accordance with AASHTO Article 8.30;
Splices of WWF in accordance with AASHTO Article 8.32,
(one space + 2" minimum, more for larger areas).

RCB Reinforcement Detail
Single 4'x4' VDOT–ASTM C1433 Alt–I for 2'–5' Fill.

AMERICAST®
A Division of VALLEY BLOX, Inc.

Harrisonburg Plant
210 Stone Spring Road
Harrisonburg, VA 22801
1-800-648-2278

Halltown Plant
PO Box 120
Halltown, WV 25423
1-800-648-4580

Ashland Plant
11352 Va. Precast Rd
Ashland, VA 23005
1-800-999-2278

For: G Nice		Date	By/Chk
	Original:	09-28-2005	TL
Job: Warhill Site James City Co., VA	Last Rev:		
	Scale:	1/2" = 1'-0"	
Str: RCB-4x4 / Contract: D7079	Drw Num:	RD	

BOXCAR

Version 2.03 for Windows
12 March 2001

A Computer Program for the Structural Design of Reinforced Concrete Box Culverts

Developed by

Simpson Gumpertz & Heger Inc.
Arlington Massachusetts
in cooperation with

The Federal Highway Administration
and
The American Concrete Pipe Association

The successful application and use of this software product is dependent on the application of skilled engineering judgment and is the responsibility of the user. The user must select input values suitable to his specific installation. The information presented in the computer output is for review, interpretation, application and approval by a qualified engineer.

****

ANY IMPLIED OR EXPRESS WARRANTIES COVERING THE SOFTWARE PROGRAM OR PROGRAM USER MANUAL INCLUDING ANY WARRANTIES OF MERCHANTABILITY OR FITNESS FOR A PARTICULAR PURPOSE ARE EXPRESSLY EXCLUDED. SIMPSON GUMPERTZ & HEGER INC., THE AMERICAN CONCRETE PIPE ASSOCIATION, AND THE FEDERAL HIGHWAY ADMINISTRATION SHALL NOT BE LIABLE FOR SPECIAL, INCIDENTAL, CONSEQUENTIAL INDIRECT OR OTHER SIMILAR DAMAGES ARISING FROM BREACH OF WARRANTY, BREACH OF CONTRACT OR OTHER LEGAL THEORY EVEN IF SUCH PARTIES HAVE BEEN ADVISED OF SUCH DAMAGES.

****

Date: 09-28-2005
Time: 09:52:06

Filename - 0404V205
Job Description - 4'x4' VDOT-ASTM Alt-I 2'-5' Fill

GEOMETRY

Span	4. ft	Top Slab Thickness	8. in.
Rise	4. ft	Bottom Slab Thickness	8. in.
Min. Depth of Fill	2. ft	Sidewall Thickness	8. in.
Max. Depth of Fill	0. ft	Length of Precast Section	8. ft
Depth Increment	0. ft		

HAUNCH DIMENSIONS		CONCRETE COVERS	
Top Vertical	0. in.	Top Outside	1.50 in.
Top Horizontal	0. in.	Bottom Outside	1.50 in.
Bottom Vertical	0. in.	Sidewall Outside	1.50 in.
Bottom Horizontal	0. in.	Top Inside	1.50 in.
		Bottom Inside	1.50 in.
		Sidewall Inside	1.50 in.

MATERIAL PROPERTIES

Main Reinforcing Yield Stress	65000.	psi
Design Concrete Strength	5000.	psi
Concrete Density	150.	pcf

DESIGN SPECIFICATION AASHTO Standard

LOAD FACTORS

Dead Load:	Shear and Moment	1.30
	Thrust	1.00
Live Load:	Shear and Moment	2.17
	Thrust	1.00

LOAD MODIFIERS

Dead Load:	Shear and Moment	1.00
	Thrust	1.00
Live Load:	Shear and Moment	1.00
	Thrust	1.00

STRENGTH REDUCTION FACTORS

Flexure	0.90
Shear	0.85

REINFORCING DATA

	DIAMETER	SPACING
Top Slab Outside Face(AS7)	0.325 in.	4 in.
Bottom Slab Outside Face(AS8)	0.325 in.	4 in.
Sidewall Outside Face(AS1)	0.325 in.	4 in.
Top Slab Inside Face(AS2)	0.325 in.	4 in.
Bottom Slab Inside Face(AS3)	0.325 in.	4 in.
Sidewall Inside Face(AS4)	0.325 in.	4 in.

The diameters are used to estimate depth to tension reinforcing from compression face. They do not represent required reinforcing diameters.

SOIL LOAD DATA

Soil Density	120 pcf
Minimum Lateral Pressure Coefficient	0.13
Maximum Lateral Pressure Coefficient	0.50
Installation Type	Embankment/Compacted
Soil-Structure Interaction Factor	1.075

LIVE LOAD DATA

Live Load	Interstate(Alt. Military Loading)
Live Load Magnitude	24.0 kips
Tire Footprint Length	.0 in.
Tire Footprint Width	.0 in.
Live Load Distribution Factor	1.75
Direction of travel	Parallel to span
Impact Factor	1.10
Lane Load	0.0 psf

SURCHARGE LOADS

Vertical Pressure	0.0 psf
Horiz. Pressure at Culvert Top	0.0 psf
Horiz. Pressure at Culvert Bottom	0.0 psf
Application Code	Additional Dead Load

FLUID LOADS

Depth of Fluid	3.0 ft
Fluid Density	62.5 pcf

MEMBER LOADS
Load Conditions 1 to 10

Load Condition	Member	Load Intensity at Start of Load (k/in./ft)	Load Intensity at End of Load (k/in./ft)	Distance from A-End to Start of Load (in.)	Distance from A-End to End of Load (in.)
1	1	0.008	0.008	0.0	56.0
1	2	0.000	0.000	0.0	0.0
1	3	0.025	0.025	0.0	56.0
1	4	0.000	0.000	0.0	0.0
2	1	0.022	0.022	0.0	56.0
2	2	0.000	0.000	0.0	0.0
2	3	0.022	0.022	0.0	56.0
2	4	0.000	0.000	0.0	0.0
3	1	0.000	0.000	0.0	0.0
3	2	0.003	0.009	0.0	56.0
3	3	0.000	0.000	0.0	0.0
3	4	0.009	0.003	0.0	56.0
4	1	0.000	0.000	0.0	0.0
4	2	0.000	-0.016	16.0	52.0
4	3	-0.002	-0.002	4.0	52.0
4	4	-0.016	0.000	4.0	40.0
5	1	0.000	0.000	0.0	0.0
5	2	0.008	0.028	0.0	56.0
5	3	0.000	0.000	0.0	0.0
5	4	0.028	0.008	0.0	56.0
6	1	0.000	0.000	0.0	0.0
6	2	0.000	0.000	0.0	0.0
6	3	0.000	0.000	0.0	0.0
6	4	0.000	0.000	0.0	0.0
7	1	0.081	0.081	0.0	56.0
7	2	0.000	0.000	0.0	0.0
7	3	0.081	0.081	0.0	56.0
7	4	0.000	0.000	0.0	0.0
8	1	0.000	0.000	0.0	0.0
8	2	0.035	0.010	0.0	56.0
8	3	0.000	0.000	0.0	0.0
8	4	0.010	0.035	0.0	56.0
9	1	0.000	0.000	0.0	56.0
9	2	0.000	0.000	0.0	0.0
9	3	0.000	0.000	0.0	56.0
9	4	0.000	0.000	0.0	0.0
10	1	0.000	0.000	0.0	0.0
10	2	0.000	0.000	0.0	56.0
10	3	0.000	0.000	0.0	0.0
10	4	0.000	0.000	0.0	56.0

MEMBER LOADS
Load Conditions with Concentrated Wheel Loads

Load Condition	Member	Truck Wheel Number	Load Intensity at Start of Load (k/in./ft)	Load Intensity at End of Load (k/in./ft)	Distance from A-End to Start of Load (in.)	Distance from A-End to End of Load (in.)
11	1	1	0.000	0.000	0.0	0.0
11	1	2	0.114	0.114	0.0	21.5
11	1	3	0.000	0.000	0.0	0.0
11	1	4	0.000	0.000	0.0	0.0
11	3	-	0.000	0.152	23.7	56.0
12	1	1	0.000	0.000	0.0	0.0
12	1	2	0.114	0.114	10.3	53.4
12	1	3	0.000	0.000	0.0	0.0
12	1	4	0.000	0.000	0.0	0.0
12	3	-	0.124	0.052	0.0	56.0
13	1	1	0.000	0.000	0.0	0.0
13	1	2	0.114	0.114	10.3	53.4
13	1	3	0.000	0.000	0.0	0.0
13	1	4	0.000	0.000	0.0	0.0
13	3	-	0.124	0.052	0.0	56.0
14	1	1	0.000	0.000	0.0	0.0
14	1	2	0.114	0.114	8.4	51.4
14	1	3	0.000	0.000	0.0	0.0
14	1	4	0.000	0.000	0.0	0.0
14	3	-	0.106	0.070	0.0	56.0
15	1	1	0.000	0.000	0.0	0.0
15	1	2	0.114	0.114	7.5	50.5
15	1	3	0.000	0.000	0.0	0.0
15	1	4	0.000	0.000	0.0	0.0
15	3	-	0.097	0.079	0.0	56.0
16	1	1	0.000	0.000	0.0	0.0
16	1	2	0.114	0.114	6.5	49.5
16	1	3	0.000	0.000	0.0	0.0
16	1	4	0.000	0.000	0.0	0.0
16	3	-	0.088	0.088	0.0	56.0
17	1	1	0.000	0.000	0.0	0.0
17	1	2	0.114	0.114	5.5	48.5
17	1	3	0.000	0.000	0.0	0.0
17	1	4	0.000	0.000	0.0	0.0
17	3	-	0.079	0.097	0.0	56.0
18	1	1	0.000	0.000	0.0	0.0
18	1	2	0.114	0.114	4.6	47.6
18	1	3	0.000	0.000	0.0	0.0
18	1	4	0.000	0.000	0.0	0.0
18	3	-	0.070	0.106	0.0	56.0
19	1	1	0.000	0.000	0.0	0.0
19	1	2	0.114	0.114	2.6	45.7
19	1	3	0.000	0.000	0.0	0.0
19	1	4	0.000	0.000	0.0	0.0
19	3	-	0.052	0.124	0.0	56.0
20	1	1	0.000	0.000	0.0	0.0
20	1	2	0.114	0.114	2.6	45.7

20	1	3	0.000	0.000	0.0	0.0
20	1	4	0.000	0.000	0.0	0.0
20	3	-	0.052	0.124	0.0	56.0
21	1	1	0.000	0.000	0.0	0.0
21	1	2	0.114	0.114	34.5	56.0
21	1	3	0.000	0.000	0.0	0.0
21	1	4	0.000	0.000	0.0	0.0
21	3	-	0.152	0.000	0.0	32.3

ULTIMATE LOAD FORCES

Sect.	Max M+ (in.-kip/ft)	Max V+ (kip/ft)	Max P+ (kip/ft)	Max M- (in.-kip/ft)	Max V- (kip/ft)	Max P- (kip/ft)
1	71.25	.94	.08	.00	-.94	1.39
2	1.97	6.69	.02	-21.89	.00	1.45
3	1.97	6.69	.02	-21.89	.00	1.45
4	.00	.01	1.16	-37.47	-2.01	3.79
5	.00	.01	1.16	-37.47	-2.01	3.79
6	14.17	.15	1.16	-34.11	-.18	3.96
7	.00	1.90	1.16	-35.73	-.13	3.96
8	.00	1.90	1.16	-35.73	-.13	3.96
9	.60	.00	.07	-18.00	-6.49	1.47
10	.60	.00	.07	-18.00	-6.49	1.47
11	65.46	.85	.02	.00	-.85	1.53
12	28.95	5.25	.07	-5.60	.00	1.39
13	28.95	5.25	.07	-5.60	.00	1.39
14	3.58	.04	1.16	-34.85	-1.46	3.79
15	3.58	.04	1.16	-34.85	-1.46	3.79
16	.04	1.45	1.16	-33.65	-.08	3.96
17	.04	1.45	1.16	-33.65	-.08	3.96
18	29.96	.00	.02	-4.48	-4.53	1.53
19	29.96	.00	.02	-4.48	-4.53	1.53

******* SERVICE LOAD REINFORCEMENT TENSILE STRESSES TABLE *******

Design Location	As (in.²/ft)	Service Live Load Stress (ksi)	Total Service Load Stress (ksi)	Allowable Total Service Load Stress (ksi)
1	.192	.44	.00	34.92
2	.192	4.59	5.92	34.92
3	.192	4.59	5.92	34.92
4	.192	6.01	7.07	34.92
5	.192	6.01	7.07	34.92
6	.192	4.26	5.40	34.92
7	.192	3.82	6.74	34.92
8	.192	3.82	6.74	34.92
9	.192	3.37	5.05	34.92
10	.192	3.37	5.05	34.92
11	.192	1.05	.00	34.92
1	.232	21.00	27.13	34.92
6	.192	5.37	3.09	34.92
11	.192	21.00	31.58	34.92

******* FLEXURE DESIGN TABLE *******

Des Sec.	Wall, Sign of Moment	Depth to Reinf.	Ult. Moment	Ult. Thrust	Ult. Flex. Reinf. (1)	Crack Index	Governing Reinf. Area (2)	Governing Mode (3)
1	Top-Neg	6.34	0.0	1.39	0.000	0.00	0.192	Min Stl
2	Top-Neg	6.34	21.9	1.45	0.044	0.17	0.192	Min Stl
3	Top-Neg	6.34	21.9	1.45	0.044	0.17	0.192	Min Stl
4	Side-Neg	6.34	37.5	3.79	0.062	0.20	0.192	Min Stl
5	Side-Neg	6.34	37.5	3.79	0.062	0.20	0.192	Min Stl
6	Side-Neg	6.34	34.1	3.96	0.051	0.15	0.192	Min Stl
7	Side-Neg	6.34	35.7	3.96	0.055	0.19	0.192	Min Stl
8	Side-Neg	6.34	35.7	3.96	0.055	0.19	0.192	Min Stl
9	Bott-Neg	6.34	18.0	1.47	0.033	0.14	0.192	Min Stl
10	Bott-Neg	6.34	18.0	1.47	0.033	0.14	0.192	Min Stl
11	Bott-Neg	6.34	0.0	1.53	0.000	0.00	0.192	Min Stl
1	Top-Pos	6.34	71.2	0.08	0.196	0.78	0.232	Stl Strs
6	Side-Pos	6.34	14.2	1.16	0.026	0.09	0.192	Min Stl
11	Bott-Pos	6.34	65.5	0.02	0.180	0.90	0.192	Min Stl

Notes:

1. Required reinforcing to develop ultimate flexural strength.
2. Reinforcing required to meet all design criteria. The governing criteria is indicated under the column 'Governing Mode'.
3. If governing mode is listed as crack, the reinforcing may be reduced by decreasing the maximum reinforcing spacing.
4. Crack Index is defined as the total service load stress divided by the allowable total service load stress.
5. Minimum flexural reinforcing computed as 0.002 times the gross concrete section
6. Units for Flexure Design Table:

Depth to Reinforcement	(in.)
Ultimate Moment	(in.-kip/ft)
Ultimate Thrust	(kip/ft)
Ultimate Flexural Reinforcing	(in.^{2}/ft)
Governing Reinf. Area	(in.^{2}/ft)

******* SHEAR DESIGN METHOD 1 - AASHTO *******

Location	Ultimate Shear (kip/ft)	Allowable Shear (kip/ft)	Diagonal Tension Index	Depth to Reinf. (in.)	Stirrups Required?
12	5.2	9.1	.57	6.34	No
13	5.2	9.1	.57	6.34	No
14	1.5	9.1	.16	6.34	No
15	1.5	9.1	.16	6.34	No
16	1.5	9.1	.16	6.34	No
17	1.5	9.1	.16	6.34	No
18	4.5	9.1	.50	6.34	No
19	4.5	9.1	.50	6.34	No

Concrete shear strength taken as 2 times the square root of f'c, f'c in psi.

BOX CULVERT DESIGN SUMMARY SHEET
4.00 ft Span x 4.00 ft Rise

****

INSTALLATION DATA

Height of Fill Over Culvert, ft	2.00
Soil Unit Weight, pcf	120.
Minimum Lateral Soil Pressure Coefficient	0.125
Maximum Lateral Soil Pressure Coefficient	0.500
Soil-Structure Interaction Factor	1.075
Installation Type	Embankment/Compacted

LOADING DATA

Design Specification	AASHTO Standard
Dead Load Factor - Moment and Shear	1.30
Dead Load Factor - Thrust	1.00
Live Load Factor - Moment and Shear	2.17
Live Load Factor - Thrust	1.00
Dead Load Modifier - Moment and Shear	1.00
Dead Load Modifier - Thrust	1.00
Live Load Modifier - Moment and Shear	1.00
Live Load Modifier - Thrust	1.00
Strength Reduction Factor-Flexure	0.90
Strength Reduction Factor-Diagonal Tension	0.85
Live Load	
Live Load Type	AASHTO Interstate/HS
Live Load Magnitude, kips	24.0
Tire Footprint Length, in.	1.0
Tire Footprint Width, in.	1.0
Live Load Distribution Factor	1.75
Direction of travel	Parallel to span
Impact Factor	1.10
Lane Load, psf	0.0

MATERIAL PROPERTIES

Minimum Specified Reinforcing Yield Strength, ksi	65.0
Concrete - Specified Compressive Strength, ksi	5.0

GEOMETRY

Top Slab Thickness, in.	8.0
Side Wall Thickness, in.	8.0
Bottom Slab Thickness, in.	8.0
Top Horizontal Haunch Dimension, in.	0.0
Bottom Horizontal Haunch Dimension, in.	0.0
Top Vertical Haunch Dimension, in.	0.0

G E O M E T R Y (Continued)

Bottom Vertical Haunch Dimension, in.	0.0
Concrete Cover Over Steel, in.	
Top Slab - Outside Face	1.50
Bottom Slab - Outside Face	1.50
Side Wall - Outside Face	1.50
Top Slab - Inside Face	1.50
Bottom Slab - Inside Face	1.50
Side Wall - Inside Face	1.50

R E I N F O R C I N G D A T A

LOCATION		AREA (in.²/ft)	STIRRUPS REQUIRED?
TRANSVERSE			
Side Wall	- Outside Face (AS1)	0.192	No
Top Slab	- Inside Face (AS2)	0.232	No
Bottom Slab	- Inside Face (AS3)	0.192	No
Side Wall	- Inside Face (AS4)	0.192	No
Top Slab	- Outside Face (AS7)	0.192	No
Bottom Slab	- Outside Face (AS8)	0.192	No

Notes:

1 Top slab outside face steel(AS7) must extend completely across the top slab. The sidewall outside face steel (AS1) must be bent at the corner and extended across the top slab sufficiently to meet AASHTO requirements for tension laps.

2 Bottom slab outside face steel (AS8) must extend completely across the bottom slab. The sidewall outside face steel (AS1) must be bent at the corner and extended across the bottom slab sufficiently to meet AASHTO requirements for tension laps.

3 Negative moment may exist in the entire top slab

4 Negative moment may exist in the entire bottom slab

COMMONWEALTH OF VIRGINIA
THOMAS LAWRENCE
NO. 022827
09-28-2005
PROFESSIONAL ENGINEER

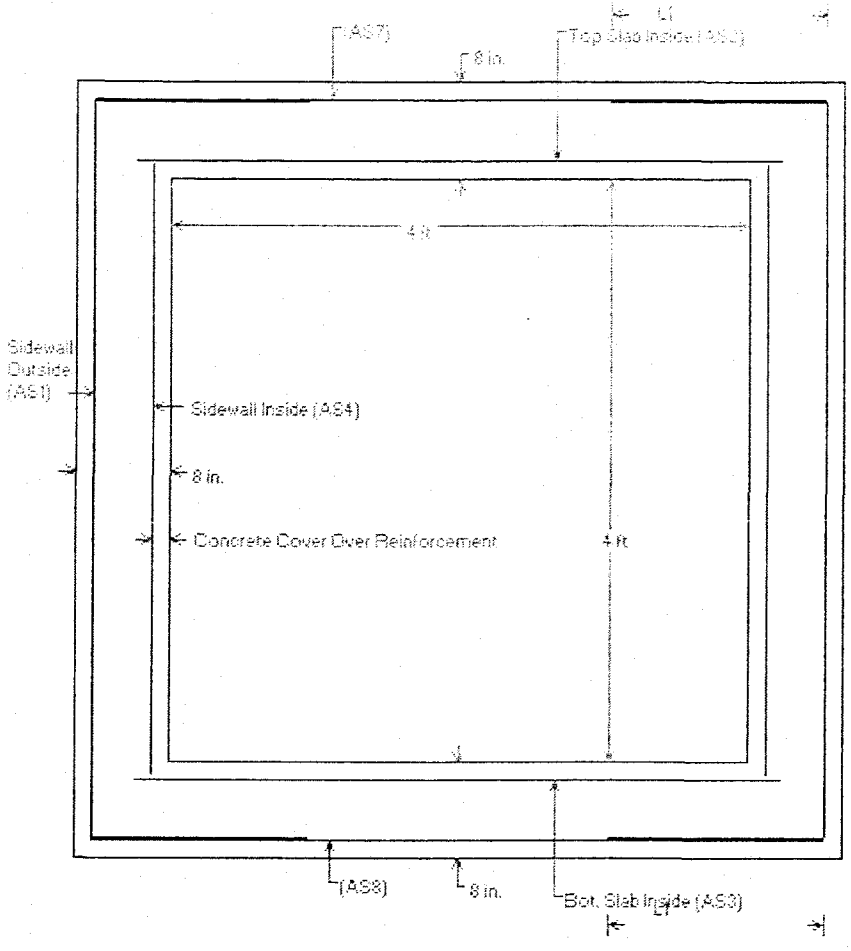

* <L1> is Splice Length
* (AS7) is Top Slab Outside
* (AS8) is Bottom Slab Outside
* See Box Culvert Design Summary Sheet for transverse and distribution reinforcement, as required.
* For sidewall thicknesses of 6 in. and above, extend AS2 and AS3 a min. of 4 in. beyond the inside face of the sidewall. For thicknesses less than 6 in., extend AS2 and AS3 at least to within 1-1/2 in. of the outside face of the sidewall.

Notes:

1) Other reinforcement schemes that provide the required reinforcement areas at all locations identified in the program output are acceptable.
2) Longitudinal reinforcement is not shown for clarity, see AASHTO M259 for longitudinal reinforcement and for additional requirements.

Geometry:

	Use		Defaults	
RCB Rise	4	Feet	6	Feet
Type (I,II)	I		I	
Slope (_:1)	2:1		2	
Wing Angle	45°		45°	
Scour Depth	30"			
Curtain Style	CIP			

[see Stability for Lt and Lh]

Stem Dim's:	feet	inches			inches
Wing Hgt, K	5.50'	66"	5.50'	OverAllHgt	74"
Wing Width, M	10.00'	120"	11.00'	OverAllWidth	132"
Tip Hgt, L	1.75'	21"	1.83'		

Thichnesses:	inches		Increments:	Use	Defaults
Toe, Ttoe	8"	8"	Min Heel	6"	6"
Heel, Th	8"	8"	Heel Incr	6"	6"
Stem, Ts	8"	8"			
			Min Toe	8"	8"
			Toe Incr	8"	8"
			Th Incr	4"	4"

WingAngle RAD	0.785398	cos	sin	Degrees
SigmaNormal	0.339837	0.942809	0.333333	19.471°
SigmaParrallel	0.339837	0.942809	0.333333	19.471°
(Sloped) FillHgt	80.36"	(varies with Lh)		

COMMONWEALTH OF VIRGINIA
THOMAS LAWRENCE
NO. 022827
9-28-2005
PROFESSIONAL ENGINEER

Design Parameters:

Installation

	Use		Defaults
LLsur Hsur	0		0
rhoE	120	pcf	120
Ka	0.25		0.25
Kp	4		4.00
Hp	0		0.00
mu Sliding	0.5		0.50
Min FSot	2.00		2.00
Min FSs	1.50		1.50
Pmax	3000	psf	3000

Reinf Conc Design

rhoC	150	pcf	150
fc	4000	psi	4000
fy	60000	psi	60000
Es	29000000	psi	29000000
Ec	3604997	psi	3604997
Zmax	98	kips/in	

External Wts and Forces:

WtStemVoid	-Ts * (WingHgt - TipHgt) * WingWidth / 12 ^ 3 * rhoC
	-3750 LBs (void not used in stability)
WtStem	Ts * OAH * WingWidth / 12 ^ 3 * rhoC
	6167 LBs
WtHeel	Lh * Th * WingWidth / 12 ^ 3 * rhoC
	1500 LBs
WtToe	Lt * Ttoe * WingWidth / 12 ^ 3 * rhoC
	667 LBs
WtCol	0 LBs
WtBWW	8333 LBs

Overturning Forces:

OTfSur	= Ka * rhoE * Hsur * OAH * WingWidth / 12 ^ 3
	0 LBs
OTfFill	= 0.5 * Ka * rhoE * FillHgt * FillHgt * WingWidth / 12 ^ 3 * cos(SigmaNormal)
	6343 LBs
OTfPassive	0 LBs
SlidingForce	6343 LBs

Resisting Force of Sloped Fill:

RfFill	= 0.5 * Ka * rhoE * FillHgt * FillHgt * WingWidth / 12 ^ 3 * sin(SigmaNormal)
	2242 LBs

Fill Wts:

WtFillOnHeel	Lh * (OAH - Th + Hsur) * WingWidth / 12 ^ 3 * rhoE
	9900 LBs
WtSlopedFillOnHeel	Lh * Lh * TAN(SigmaNormal) / 2 * WingWidth / 12 ^ 3 * rhoE
	477 LBs
WtFillOnToe	0 LBs
Resultant	20953 LBs

External Moments:

[Moments taken about Bottom-Front Edge of Toe]

Overturning Moments:

OTfSur	0 LBs	
yrSurcharge	= OAH	
	74"	
MotSur	0	in-kips
OTfFill	6343	
yrFill	FillHgt / 3	
	27"	
MotFill	170	in-kips
OTfPassive	0	
yrPassive	= Hp / 3	
yrPassive	0	
MotPassive =	0	
Mot =	= MotFill + MotPassive	
Mot =	170	in-kips

Resisting Moments:

xrRfFill	= Lt + Ts + Lh	
	34"	
MrRfFill	76	in-kips
xrFillOnHeel	= Lt + Ts + Lh / 2	
	25"	
MrFillOnHeel	248	in-kips
xrSlopedFillOnHeel	= Lt + Ts + Lh * 2 / 3	
	28"	
MrSlopedFillOnHeel	13	
xrFillOnToe	4"	
MrFillOnToe	0	in-kips
Mresist =	451	in-kips

Wing Wt Moments:
(centriods)

xrHeel	= Lt + Ts + Lh / 2	25"
yrHeel	= Th / 2	4"
xrStem	= Lt + Ts / 2	12"
yrStem	= OAH / 2	37"
xrToe	= Lt / 2	4"
yrToe	= Ttoe / 2	4"
xrCol	0	
yrCol	0	
MrHeel	38	
MrStem	74	
MrToe	3	
MrCol	0	
MrWt	114 in-kips	
cgx =	MrWt/WtBWW	13.7
MyHeel	6	
MyStem	228	
MyToe	3	
MyCol	0	
MyWt	237 in-kips	
cgy =	MyWt/WtBWW	28.42

Stability:

Lh = 18 [iterate Lh]
Lt = 8
OverAllLength = 34

Overtuning:

Fsot = Mresist / Mot
= 2.66 OK

Sliding:

FSs = muS * Resultant / SlidingForce
= 1.65 OK

Bearing Pressure:

xr = = (Mresist + MrFillOnToe - Mot) * 1000 / (Resultant + WtFillOnToe)
= 13.42841

e = 3.571592

eIndex = 0.630281 if Abs(eIndex) > 1, Pressure Distribution is Trianglar
if Abs(eIndex) <= 1, Pressure Distribution is Trapezoidal

Ptri = 2 * (Resultant + WtFillOnToe) / (3 * xr / 12 * WingWidth / 12)
= 1248
Ptrap = (Resultant + WtFillOnToe) / (OAL / 12 * WingWidth / 12) * (1 + 6 * ABS(e) / OAL)
= 1206

P = 1206 psf
OK

Internal Forces:

CCORs = 1.50"
d = Ts - CCORs - 0.25
= 6.24"
b = 12.00"

BetaE = 1.30
DLfmv = 1.30
DLfn = 1.00
UF = 12 inches per Unit foot

Mu = Lh / OAL * Mot * BetaE * DLfmv / WingWidth * UF
= 15.2 in-kips/LF

(see Reinf Design)

Vu = Lh / OAL * Resultant * BetaE * DLfmv / WingWidth * UF
= 1875 LBs/LF

Vc = 0.85 * 2 * SQRT(fc) * b * d
= 8051 LBs/LF

Shear Index, Vu/Vc = 0.23 OK

Reinforcement Design Calculations:

AsFlex = (g * phif * d - Nu - SQR(g * (g * (phif * d)^2 - Nu * (2 * phif * d -h) - 2 * Mu))) / fy
where g = 0.85 * b * fc = 40800 fc = 4000 fy = 60000

b = 12" phif = 0.9 PI = 3.141593

Es = 29,000,000 psi (non-prestressed) Ec = 57000*Sqrt(fc) = 3,604,997 n = Es/Ec = 8.04 z = 98

RCB Wing Wall

As = 0.393 1 @ D20.0 @ 6" plus none

		Ms =	9 in-kips
h =	8 in	Mu =	15 in-kips
d =	6.24 in	Nu =	0 kips

AsFlex =	0.045 Sqin/LF	rhoRf =	0.001
		MaxSpa =	4.31"
Qty #4 / LF =	0.2 Bars		
Qty #5 / LF =	0.1 Bars		
Qty #6 / LF =	0.1 Bars		
As D20.0 @ 6" =	0.393 Sqin/LF	use:	1
Add'l Qty #4 / LF =	-1.8 Bars	or = #4 @	-6"
Add'l Qty #5 / LF =	-1.1 Bars	or = #5 @	-6"
Add'l Qty #6 / LF =	-0.8 Bars	or = #6 @	-12"
		use #0 @	0"

use: 1 @ D20.0 @ 6" plus none

		AsProvide =	0.393 Sqin/LF
rhoRfp =	0.005	MaxSpa =	12.00"

AMERICAST®

RECEIVED
OCT 10 2005
BY:.....

Wednesday, September 28, 2005
George Nice & Sons, Inc.
143 Skimino Road
Williamsburg, VA 23188
Voz: (757) 565-2885
Fax: (757) 565-1526

Re: Americast Job D7079
Warhill Site
James City Co., VA
Str: RCB-4x4

102 07

ATTN:

Accompanying are submittal details for the above project (see Document List).
Please return one copy each with the engineer's comments or approval.

Please verify locations, directions and elevations. If needed, adjustments to meet field conditions to be performed in field, by others.

We understand that the 7'x 7' SWM Inlet/Outfall Box will be cast in place, by others. We intend to provide 6"± of exposed steel to facilitate the connection to the CIP.

Respectfully,

Thomas Lawrence, PE
Americast
tlawrence@AmericastUSA.Com

Document List

Drawings:

PD	RCB Project Data Double 4'x4' RCB.
LO	Layout Detail 36' Single 4'x4' RCB with 0° Skew and Precast Wing Walls.
Std	Standard Section Detail Single 4'x4'.
Pc 1	Outlet Detail Single 4'x4' RCB with 0° Skew and Precast Parapet.
Pc 5	Inlet Detail Single 4'x4' RCB with 0° Skew and Exposed Steel.
HW-ES	RCB Headwall and End Section Details.
Curtain	Cast In Place Curtain Wall.
BWW-L	4' Rise RCB Wing Wall 2:1 Slope, Type I, 45°L Wing Angle.
BWW-R	4' Rise RCB Wing Wall 2:1 Slope, Type I, 45°R Wing Angle.
BWW RS	RCB Wing Wall Reinforcement Section.
RS	RCB Reinforcement Section Single 4'x4' VDOT-ASTM C1433 Alt-I for 2'-5' Fill.
RD	RCB Reinforcement Detail Single 4'x4' VDOT-ASTM C1433 Alt-I for 2'-5' Fill.

Calculations:

S0404V205	Single 4'x4' RCB VDOT-ASTM 1433 Alt-I for 2'-5' Fill
BWW-21-4'-45°	RCB Wing Wall Design 2:1 Type I 45° Wing Angle.

Weights	Marking Instructions	STD Marking
Pc 1: 11,700 LBs 3 Stds: 16,000 LBs/Ea Pc 5: 11,800 LBs Pc LW1: 7,100 LBs Pc RW1: 7,100 LBs	Stencil all RCB Sections with information listed under STD Marking. Use Waterproof Paint. Plae label on inside & outside of sidewall. The word "TOP" shall be placed on the inside top surface.	GEORGE NICE & SONS WARHILL SITE JAMES CITY CO., VA VDOT–ASTM C1433 4'x4' RCB ALT–I 2'–5' FILL MANUFACTURE DATE ASHLAND PLT PC #

Shipping List – Piece Decriptions

Pc 1: Precast Headwall Parapet x Bell End Section.
Pc 2: Standard Section.
Pc 3: Standard Section.
Pc 4: Standard Section.
Pc 5: Spigot x Exposed Steel End Section

(20) Lifthole Plugs

LW1: BWW–21–4'–45°L RCB Wing Wall
RW1: BWW–21–4'–45°R RCB Wing Wall

Concrete Volumes

Pc 1: 2.691 CY RCB + 0.198 HW
3 Stds: 3.951 CY/Ea
Pc 5: 2.896 CY RCB

Pc LW1: 1.743 CY
Pc RW1: 1.743 CY

HANDLING INFORMATION

AMERICAST WILL FURNISH ONLY THE ITEMS LISTED BELOW FOR HANDLING AND ASSEMBLY OF THE PRECAST COMPONENTS. THESE ITEMS MUST BE RETURNED OR AN INVOICE WILL BE ISSUED.

(8) 1–1/4" DOUBLE SWIVEL LIFT PLATES
(4) 1–1/4" x 20" LONG COIL RODS
(4) 1/2" x 4" x 4" PLATE WASHERS
(12) 1–1/4" COIL NUTS
(4) 1–1/4" x 12" LONG COIL RODS
(2) 2 TON COME–A–LONGS

RCB Project Data
Single 4'x4' RCB.

AMERICAST®
A Division of VALLEY BLOX, Inc.

Harrisonburg Plant
210 Stone Spring Road
Harrisonburg, VA 22801
1–800–648–2278

Halltown Plant
PO Box 120
Halltown, WV 25423
1–800–648–4580

Ashland Plant
11352 Va. Precast Rd
Ashland, VA 23005
1–800–999–2278

			Date	By/Chk
For:	G Nice	Original:	09–28–2005	TL
Job:	Warhill Site James City Co., VA	Last Rev:		
		Scale:	0/0" = 1'–0"	
Str: RCB–4x4	Contract: D7079	Drw Num:	PD	

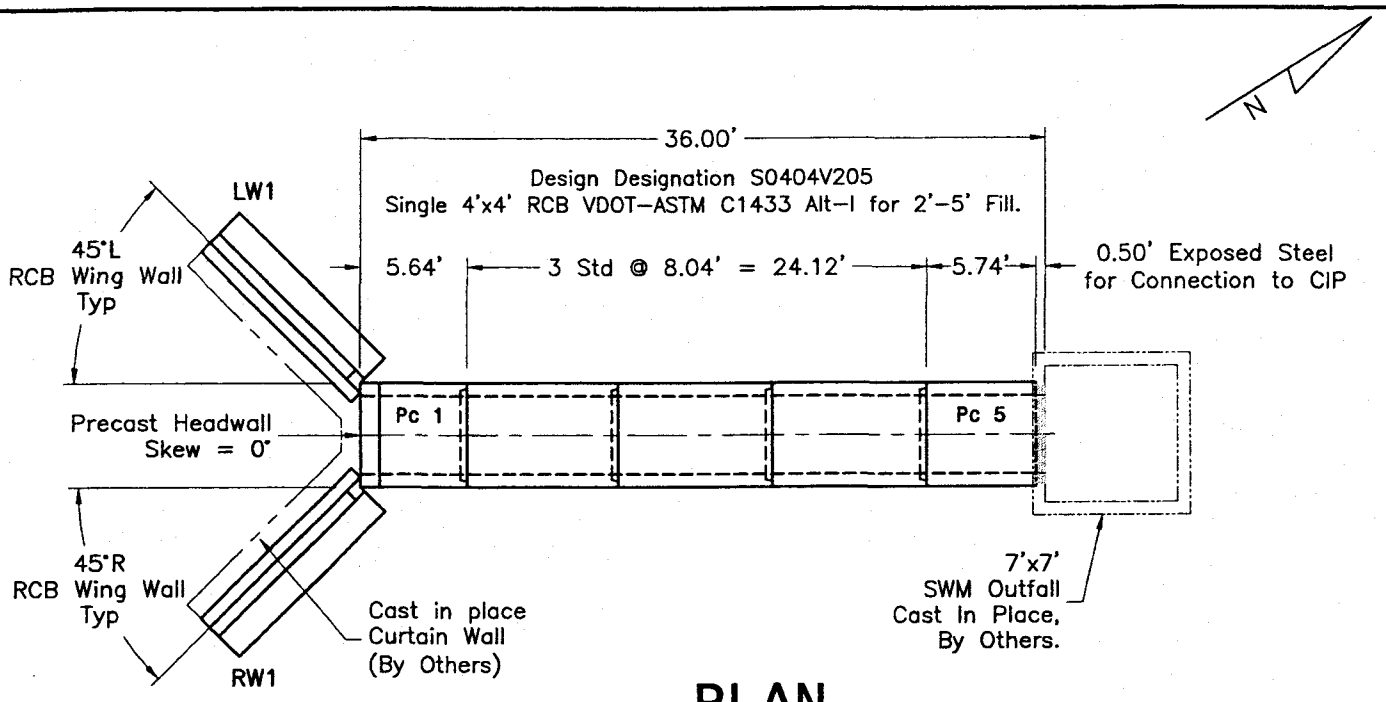

PLAN

LAY
Inv. Out = 57.00'

FLOW
Inv. In = 57.36'

Note:

1) RCB joints to be sealed in accordance with project plans and state specifications.
   1"x1" Closed Cell Neoprene attached to RCB tongue shoulder at plant unless noted.
   All handling points must be sealed with elastomeric plugs and/or non-shink grout.

2) Installation criteria to be in accordance with AASHTO Division II Section 27 and state specifications. Bedding to be 6" aggregate minimum.
   Install RCB sections bells ahead upstream unless noted.
   Pull joints together to 1/2" average gap (-1/2", +1/4), 3/4" max. gap.

3) Adjoining cast in place concrete (by others), if any, to be in accordance with project plans and state specifications.

4) This drawing supplied only as a guide; adjustment to meet field conditions must be made, by others, as needed.

Seal for Precast Only

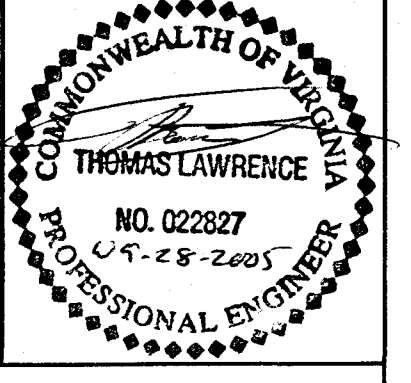

Layout Detail
36' Single 4'x4' RCB with 0° Skew and Precast Wing Walls.

AMERICAST®
A Division of VALLEY BLOX, Inc.

Harrisonburg Plant
210 Stone Spring Road
Harrisonburg, VA 22801
1-800-648-2278

Halltown Plant
PO Box 120
Halltown, WV 25423
1-800-648-4580

Ashland Plant
11352 Va. Precast Rd
Ashland, VA 23005
1-800-999-2278

For: G Nice		Date	By/Chk
	Original:	09-28-2005	TL
Job: Warhill Site James City Co., VA	Last Rev:		
	Scale:	1" = 10'	
Str: RCB-4x4	Contract: D7079	Drw Num:	LO

Upper Liftholes may be reproduced in bottom slab for stripping.

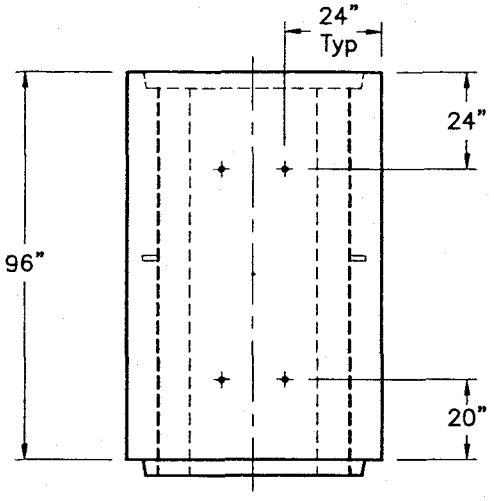

Top View

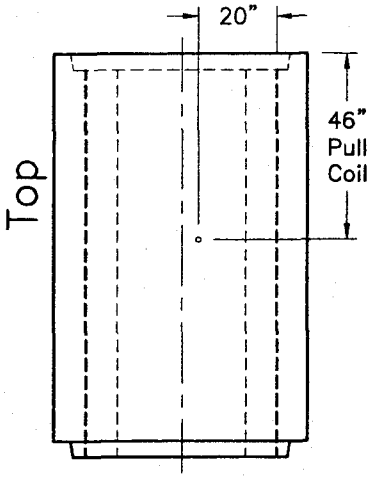

Side - Elev

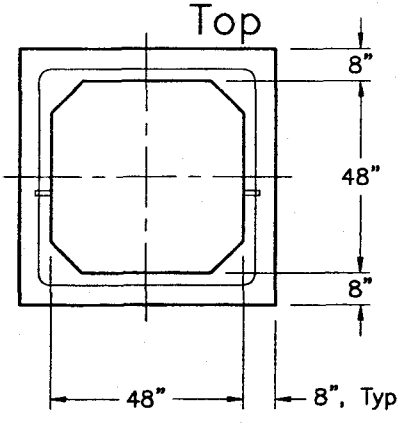

End - Elev

Pc: 2 thru 4 (3 stds req'd)
Desc: S-4x4 Standard Section
Spec: VDOT Alt-I 2'-5' Fill.
LL: 8.04'
Wt: 16,000 LBs
RCB CY: 3.951 CY

5000 psi minimum

Seal for Precast Only

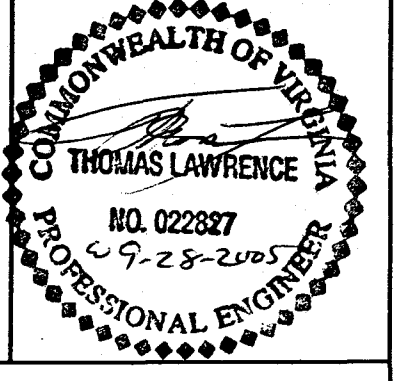

Note:
1) Liftholes to be 1 1/2" Ø PVC for 1 1/4" Double Lift Plate Assembly. Lift Code "A".

2) Pull Coils to be 1 1/4"Ø Threaded Coil Inserts for
1 1/4"Ø Threaded Rod and 1 1/4" Double Swivel Lift.

Standard Section Detail
Single 4'x4' RCB.

AMERICAST
A Division of VALLEY BLOX, Inc.

Harrisonburg Plant
210 Stone Spring Road
Harrisonburg, VA 22801
1-800-648-2278

Halltown Plant
PO Box 120
Halltown, WV 25423
1-800-648-4580

Ashland Plant
11352 Va. Precast Rd
Ashland, VA 23005
1-800-999-2278

			Date	By/Chk
For:	G Nice	Original:	09-28-2005	TL
Job:	Warhill Site James City Co., VA	Last Rev:		
		Scale:	1/4" = 1'-0"	
Str: RCB-4x4	Contract: D7079	Drw Num:	Std	

Upper Liftholes may be reproduced in bottom slab for stripping.

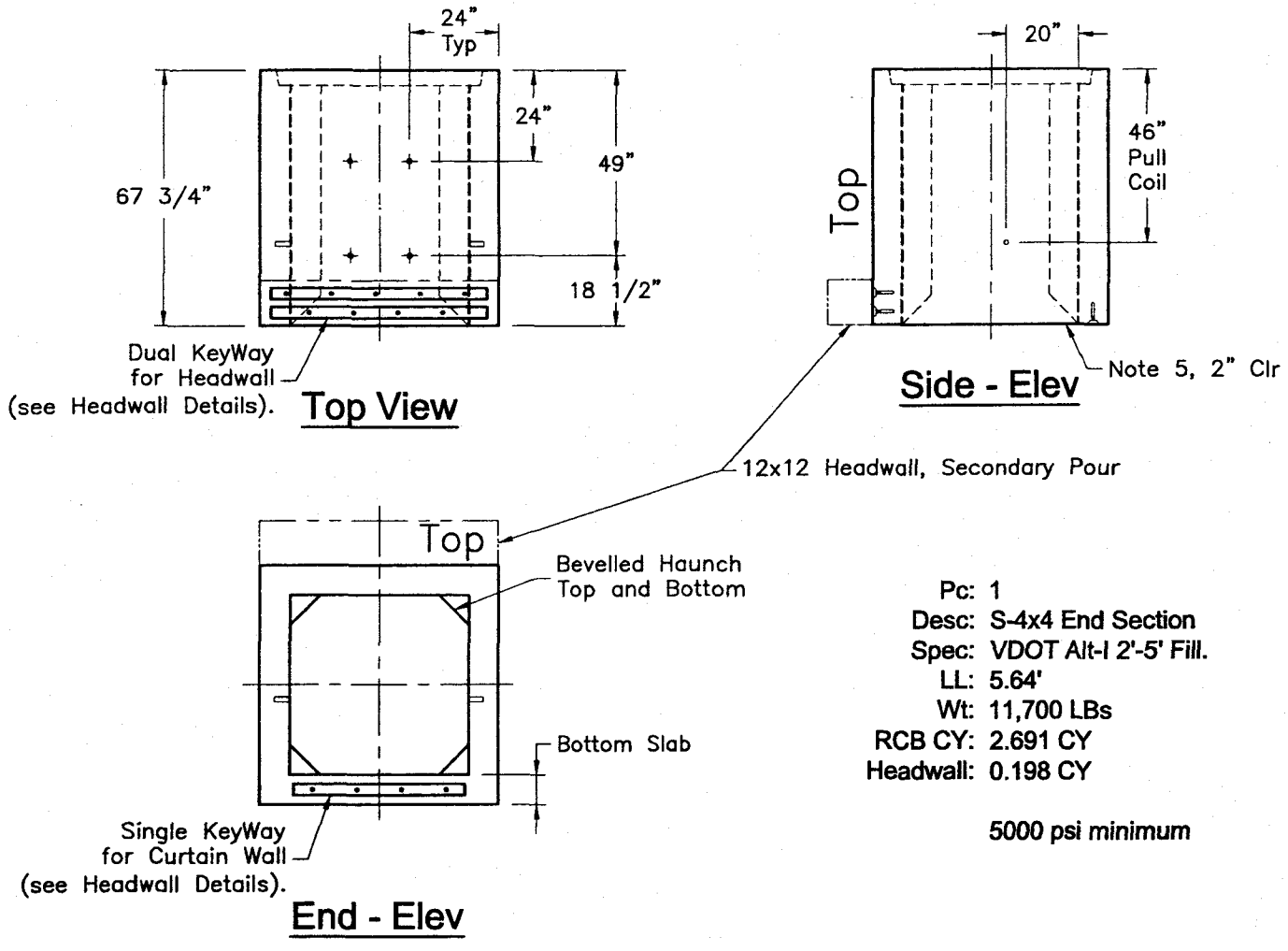

Pc: 1
Desc: S-4x4 End Section
Spec: VDOT Alt-I 2'-5' Fill.
LL: 5.64'
Wt: 11,700 LBs
RCB CY: 2.691 CY
Headwall: 0.198 CY

5000 psi minimum

Seal for Precast Only

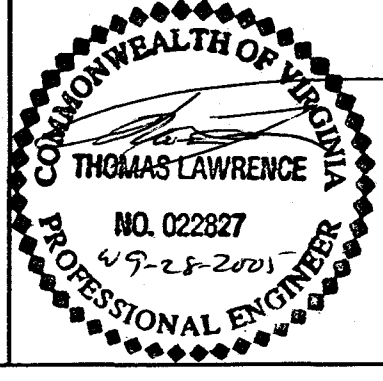

Note:

1) Liftholes to be 1 1/2" Ø PVC for 1 1/4" Double Lift Plate Assembly. Lift Code "A".

2) Pull Coils to be 1 1/4"Ø Threaded Coil Inserts for 1 1/4"Ø Threaded Rod and 1 1/4" Double Swivel Lift.

3) See Headwall Details for Headwall Parapet Reinforcement.

4) Headwall Parapet to be Secondary Pour, 4000 psi minimum concrete.

5) Provide finished face with 2" Clr minimum. Outlet to receive Bevelled Haunches.

Outlet Detail
Single 4'x4' RCB with 0° Skew and Precast Parapet.

AMERICAST
A Division of VALLEY BLOX, Inc.

Harrisonburg Plant
210 Stone Spring Road
Harrisonburg, VA 22801
1-800-648-2278

Halltown Plant
PO Box 120
Halltown, WV 25423
1-800-648-4580

Ashland Plant
11352 Va. Precast Rd
Ashland, VA 23005
1-800-999-2278

			Date	By/Chk
For:	G Nice	Original:	09-28-2005	TL
Job:	Warhill Site James City Co., VA	Last Rev:		
		Scale:	1/4" = 1'-0"	
Str: RCB-4x4	Contract: D7079	Drw Num:	Pc 1	

Upper Liftholes may be reproduced in bottom slab for stripping.

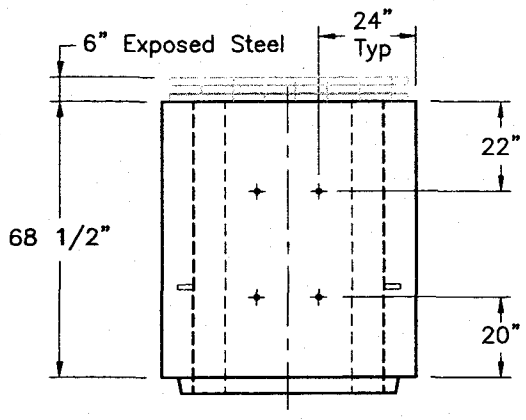

Top View

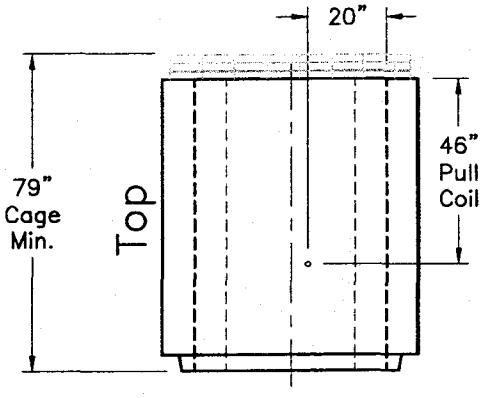

Side - Elev

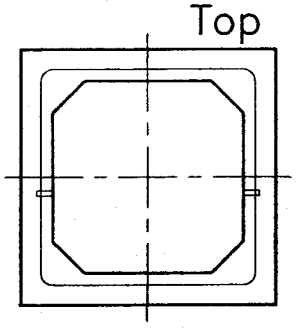

End - Elev

Pc: 5
Desc: S-4x4 End Section
Spec: VDOT Alt-I 2'-5' Fill.
LL: 5.74'
Wt: 11,800 LBs
RCB CY: 2.896 CY
Headwall: 0.000 CY

5000 psi minimum

Seal for Precast Only

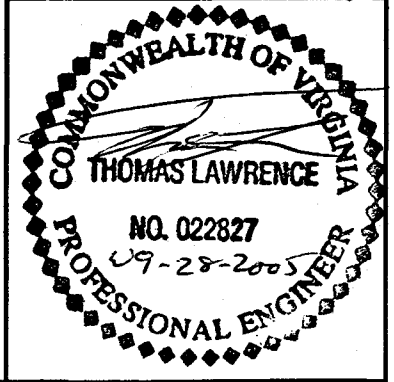

Note:
1) Liftholes to be 1 1/2" Ø PVC for 1 1/4" Double Lift Plate Assembly. Lift Code "A".

2) Pull Coils to be 1 1/4"Ø Threaded Coil Inserts for 1 1/4"Ø Threaded Rod and 1 1/4" Double Swivel Lift.

3) Provide 6" exposed steel for connection to cast in place.

Inlet Detail
Single 4'x4' RCB with 0° Skew and Exposed Steel.

AMERICAST
A Division of VALLEY BLOX, Inc.

Harrisonburg Plant
210 Stone Spring Road
Harrisonburg, VA 22801
1-800-648-2278

Halltown Plant
PO Box 120
Halltown, WV 25423
1-800-648-4580

Ashland Plant
11352 Va. Precast Rd
Ashland, VA 23005
1-800-999-2278

			Date	By/Chk
For:	G Nice	Original:	09-28-2005	TL
Job:	Warhill Site James City Co., VA	Last Rev:		
		Scale:	1/4" = 1'-0"	
Str: RCB-4x4	Contract: D7079	Drw Num:	Pc 5	

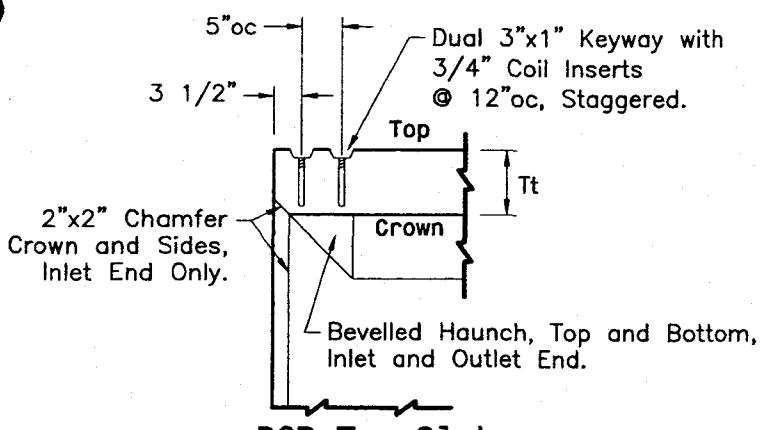

RCB Top Slab End Treatment

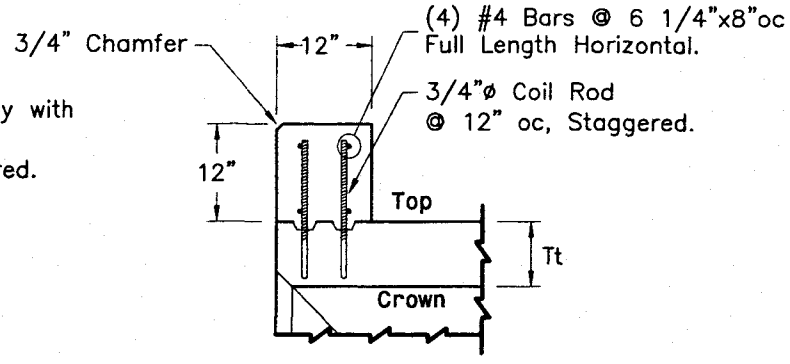

Precast Headwall Parapet

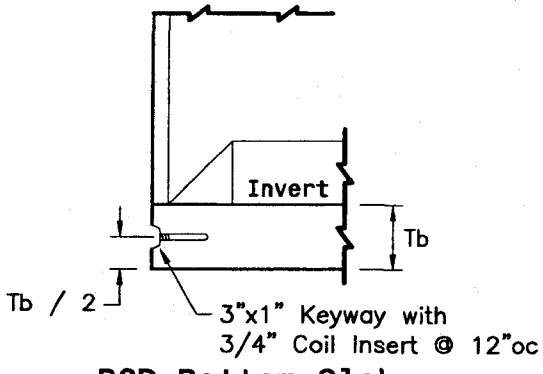

RCB Bottom Slab End Treatment

Note:

1) Inlet to receive 2"x2" Chamfer (Crown and Sides).
   Inlet and Outlet to receive Bevelled Haunches (Top and Bottom).
   3/4" Chamfer at Top-Front edge of Precast Headwall Parapet.

2) Precast Headwall Parapet to be mechanically connected to RCB End Section using 3/4" Coil Rods, supplied and installed by Americast at plant.

3) Secondary pour concrete to be in accordance with project plans and state specifications.
   Material properties: f'c = 4000 psi minimum concrete.

4) Precast Headwall Parapet to match extent and skew of Precast End Section.

5) Concrete Cover Over Reinforcement, CCOR = 2" minimum, unless noted.

Seal for Precast Only

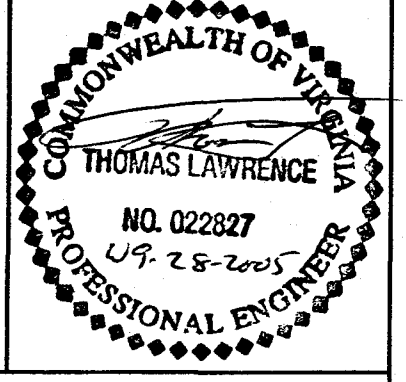

RCB Headwall and End Section Details.

AMERICAST
A Division of VALLEY BLOX, Inc.

Harrisonburg Plant
210 Stone Spring Road
Harrisonburg, VA 22801
1-800-648-2278

Halltown Plant
PO Box 120
Halltown, WV 25423
1-800-648-4580

Ashland Plant
11352 Va. Precast Rd
Ashland, VA 23005
1-800-999-2278

			Date	By/Chk
For:	G Nice	Original:	07-21-2005	TL
Job:	Warhill Site James City Co., VA	Last Rev:		
		Scale:	1/2" = 1'-0"	
Str: RCB-4x4	Contract: D7079	Drw Num:	HW-ES	

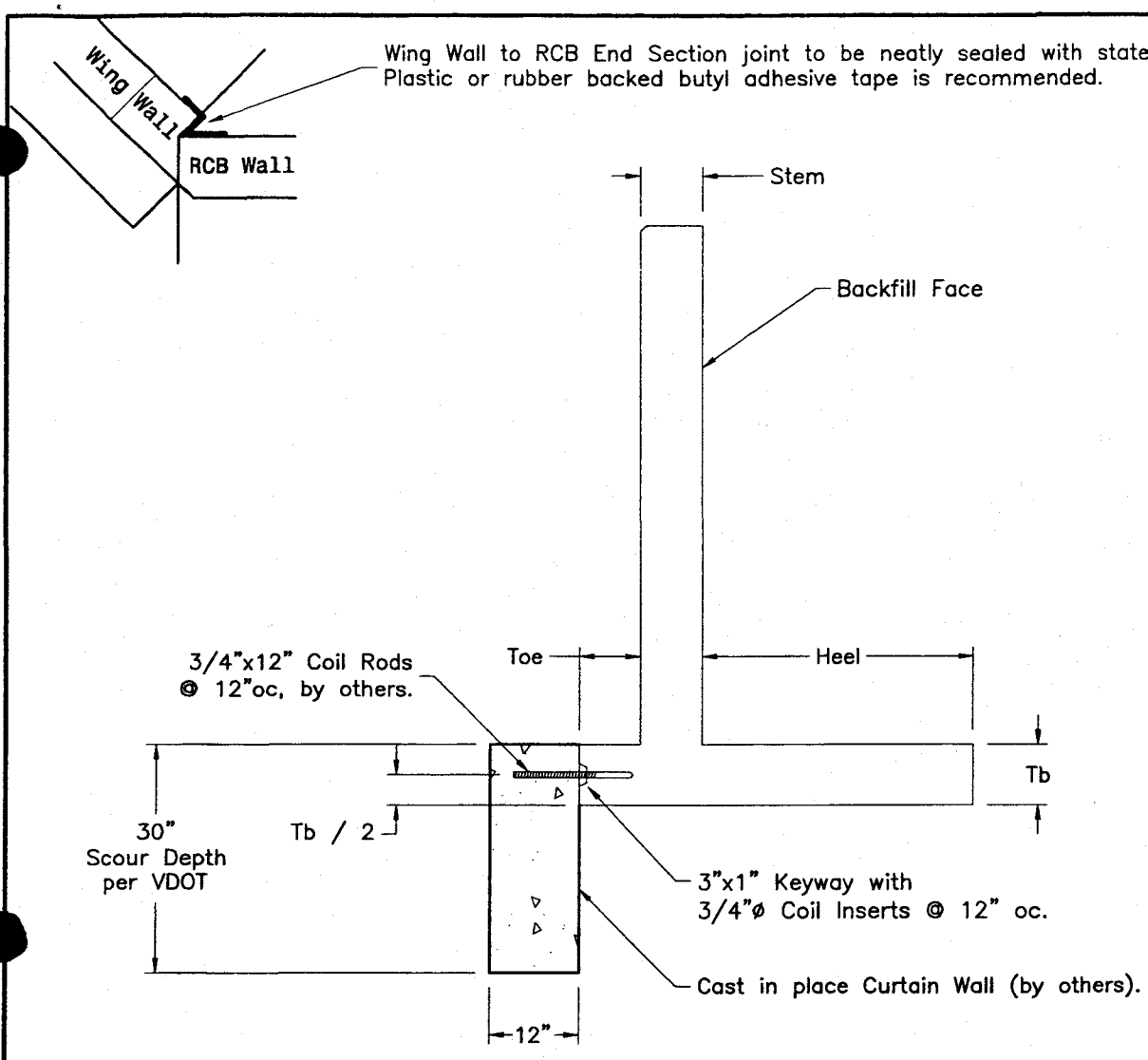

Curtain Wall at Wings

(Similar at RCB Invert)

Note:

1) 3/4" Coil Rods to be supplied and installed in field, by others.

2) Cast in place concrete, by others, to be in accordance with project plans and state specifications. Material properties: f'c = 4000 psi minimum concrete.

3) Cast in place curtain wall to extend 12" from invert face of precast as shown and be continuous from wing tip to wing tip, with expansion joints as needed.

4) Concrete Cover Over Reinforcement, CCOR = 2" minimum, unless noted.

5) Wing Wall to RCB End Section joint to be neatly sealed with state approved sealant. Plastic or rubber backed butyl adhesive tape is recommended.

Seal for Precast Only

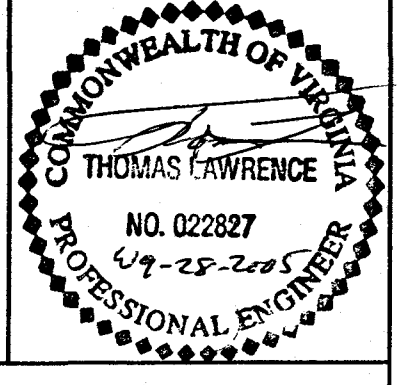

Cast In Place Curtain Wall

AMERICAST®
A Division of VALLEY BLOX, Inc.

Harrisonburg Plant
210 Stone Spring Road
Harrisonburg, VA 22801
1-800-648-2278

Halltown Plant
PO Box 120
Halltown, WV 25423
1-800-648-4580

Ashland Plant
11352 Va. Precast Rd
Ashland, VA 23005
1-800-999-2278

			Date	By/Chk
For:	G Nice	Original:	07-21-2005	TL
Job:	Warhill Site James City Co., VA	Last Rev:		
		Scale:	1/2" = 1'-0"	
Str: RCB-4x4	Contract: D7079	Drw Num:	Curtain	

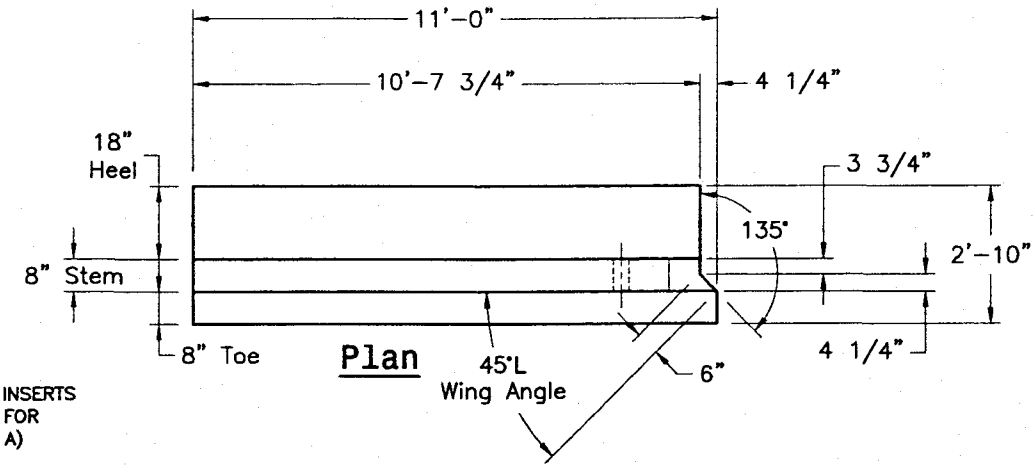

✦ = 1 1/4"ø COIL INSERTS (OPPOSITE FACE) FOR STRIPPING (CODE A)

✕ = 1 1/4"ø LIFTING SLEEVE (LIFT FROM BACK FACE) FOR HANDLING (CODE A)

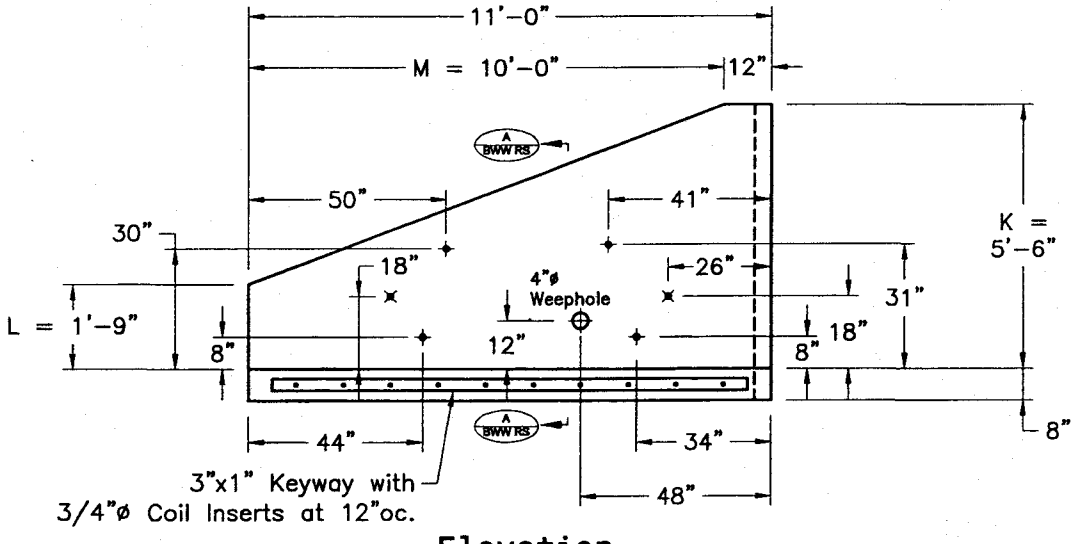

Elevation

Note:

1) Liftholes to be 1 1/4" Ø PVC for 1 1/4" Double Lift Plate Assembly. Lift from back face or both faces for best balance. Lift Code "A".

2) Strip Coils to be 1 1/4"Ø Threaded Coil Inserts. Strip Code "A".

3) See also Reinforcement Section detail BWW RS. Reinforcement to be A615 Deformed Bars or A497 Deformed WWF. Material properties: f'c = 4 ksi, fy = 60 ksi.

4) 3/4" Chamfer on Top-Front edge.

5) Concrete Cover Over Reinforcement, CCOR = 1.5" unless noted. Tolerance on Concrete Cover Over Reinforcement to be -0, +1/2".

Pc: LW1
Desc: BWW-21-4'-45°L
Spec: VDOT
LL: na
Wt: 7,100 LBs
Vol: 1.743 CY

Seal for Precast Only

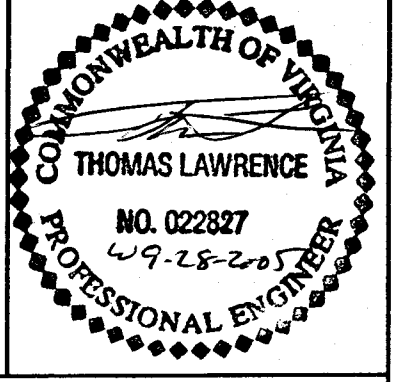

4' Rise RCB Wing Wall
2:1 Slope, Type I, 45°L Wing Angle.

AMERICAST
A Division of VALLEY BLOX, Inc.

Harrisonburg Plant
210 Stone Spring Road
Harrisonburg, VA 22801
1-800-648-2278

Halltown Plant
PO Box 120
Halltown, WV 25423
1-800-648-4580

Ashland Plant
11352 Va. Precast Rd
Ashland, VA 23005
1-800-999-2278

			Date	By/Chk
For:	G Nice	Original:	09-28-2005	TL
Job:	Warhill Site James City Co., VA	Last Rev:		
		Scale:	1/4" = 1'-0"	
Str: RCB-4x4	Contract: D7079	Drw Num:	BWW-L	

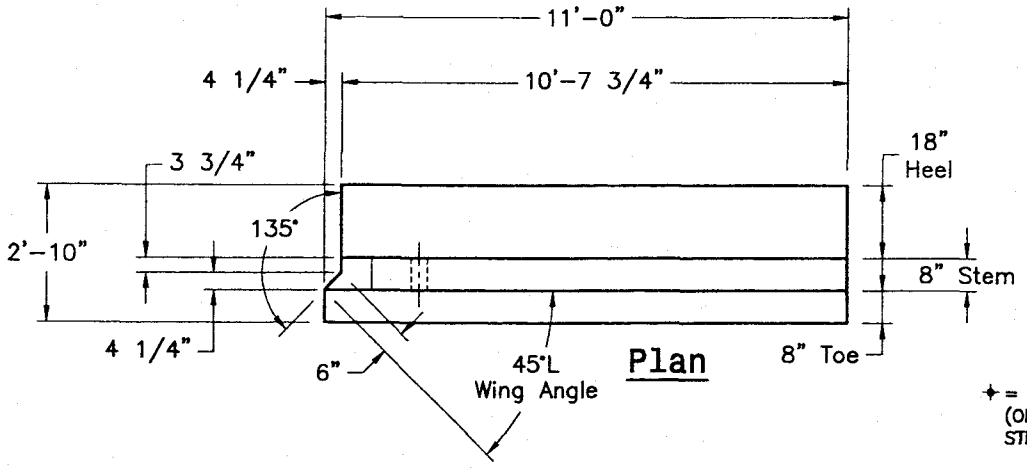

✦ = 1 1/4"ø COIL INSERTS (OPPOSITE FACE) FOR STRIPPING (CODE A)

✖ = 1 1/4"ø LIFTING SLEEVE (LIFT FROM BACK FACE) FOR HANDLING (CODE A)

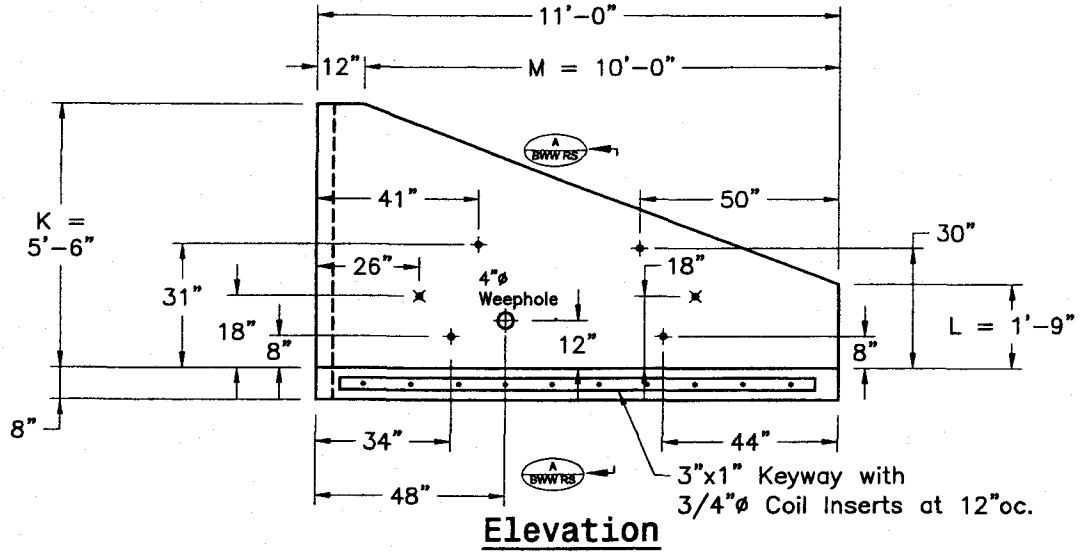

Elevation

Note:

1) Liftholes to be 1 1/4" Ø PVC for 1 1/4" Double Lift Plate Assembly. Lift from back face or both faces for best balance. Lift Code "A".

2) Strip Coils to be 1 1/4"Ø Threaded Coil Inserts. Strip Code "A".

3) See also Reinforcement Section detail BWW RS. Reinforcement to be A615 Deformed Bars or A497 Deformed WWF. Material properties: f'c = 4 ksi, fy = 60 ksi.

4) 3/4" Chamfer on Top-Front edge.

5) Concrete Cover Over Reinforcement, CCOR = 1.5" unless noted. Tolerance on Concrete Cover Over Reinforcement to be -0, +1/2".

Pc: RW1
Desc: BWW-21-4'-45°R
Spec: VDOT
LL: na
Wt: 7,100 LBs
Vol: 1.743 CY

Seal for Precast Only

COMMONWEALTH OF VIRGINIA
THOMAS LAWRENCE
NO. 022827
09-28-2005
PROFESSIONAL ENGINEER

4' Rise RCB Wing Wall
2:1 Slope, Type I, 45°R Wing Angle.

AMERICAST
A Division of VALLEY BLOX, Inc.

Harrisonburg Plant
210 Stone Spring Road
Harrisonburg, VA 22801
1-800-648-2278

Halltown Plant
PO Box 120
Halltown, WV 25423
1-800-648-4580

Ashland Plant
11352 Va. Precast Rd
Ashland, VA 23005
1-800-999-2278

For: G Nice

Job: Warhill Site
James City Co., VA

	Date	By/Chk
Original:	09-28-2005	TL
Last Rev:		
Scale:	1/4" = 1'-0"	

Str: RCB-4x4 | Contract: D7079 | Drw Num: BWW-R

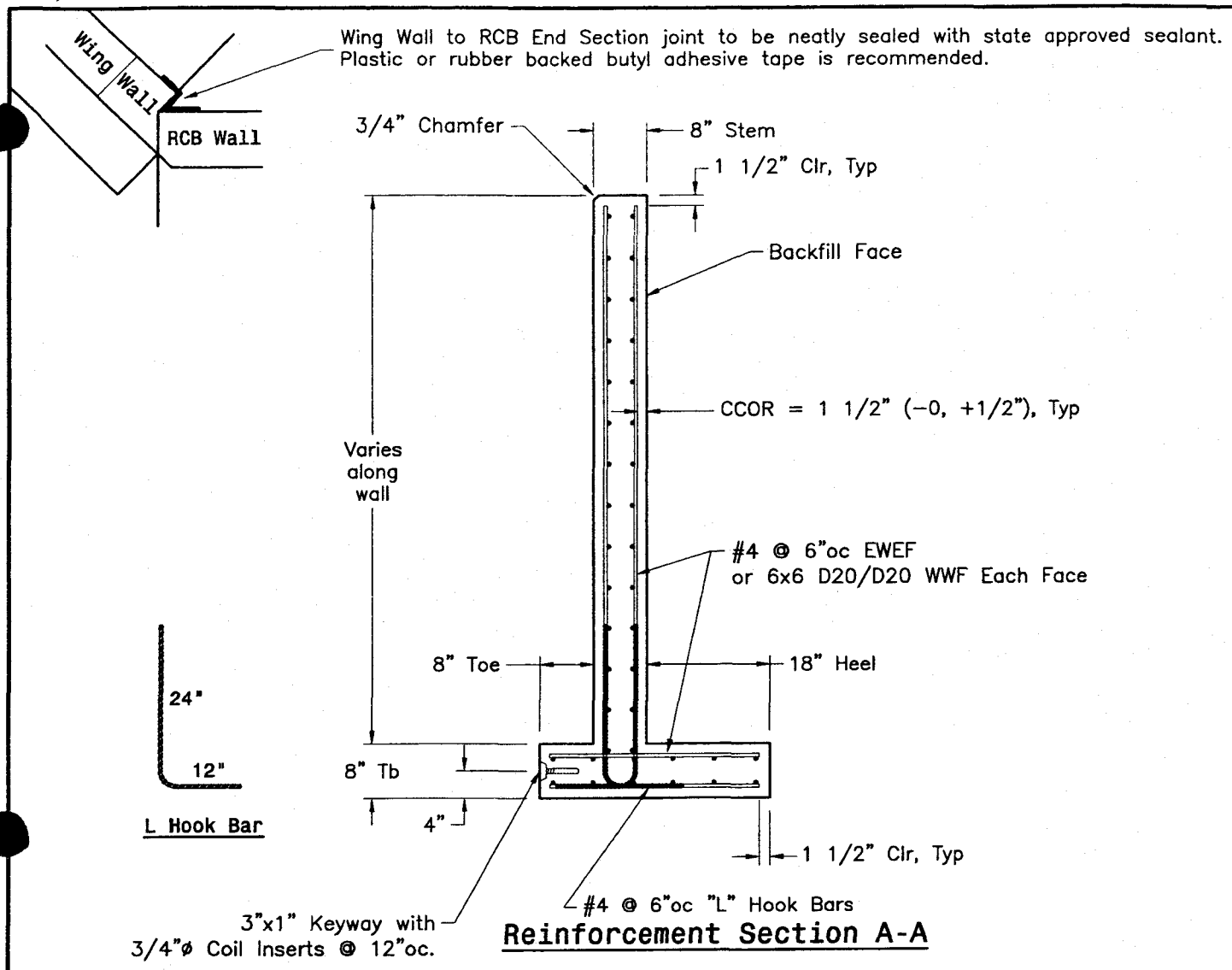

Reinforcement Section A-A

Note:

1) **Reinforcement to be ASTM A615 Deformed Bars or ASTM A497 Deformed WWF. Material properties: f'c = 4 ksi, fy = 60 ksi.**

2) **Stem wall reinforcement to be tied to footer bottom reinforcement with "L" Hook Bars. Horizontal legs to extend from rear face forward into toe and from front face back into heel. If stem wall reinforcement is made from rebar, rebar may be bent at bottom and tied to continuous footer bottom reinforcement.**

3) **3/4" Chamfer on Top-Front edge.**

4) **Concrete Cover Over Reinforcement, CCOR = 1.5" unless noted. Tolerance on Concrete Cover Over Reinforcement to be -0, +1/2".**

5) **Wing Wall to RCB End Section joint to be neatly sealed with state approved sealant. Plastic or rubber backed butyl adhesive tape is recommended.**

Seal for Precast Only

COMMONWEALTH OF VIRGINIA
THOMAS LAWRENCE
NO. 022827
09-28-2005
PROFESSIONAL ENGINEER

RCB Wing Wall
Reinforcement Section

AMERICAST
A Division of VALLEY BLOX, Inc.

Harrisonburg Plant
210 Stone Spring Road
Harrisonburg, VA 22801
1-800-648-2278

Halltown Plant
PO Box 120
Halltown, WV 25423
1-800-648-4580

Ashland Plant
11352 Va. Precast Rd
Ashland, VA 23005
1-800-999-2278

For: G Nice		Date	By/Chk
	Original:	09-28-2005	TL
Job: Warhill Site James City Co., VA	Last Rev:		
	Scale:	1/2" = 1'-0"	
Str: RCB-4x4	Contract: D7079	Drw Num: BWW RS	

Design Requirements: Precast Reinforced Concrete Box Section																			
Design			RCB Geometry					Dimensional Limits of Reinforcement					Circumferential Reinforcement (Sq.In./LF)						
Design Designation	Live Load	Fill Range	Tt	Tb	Twx	Twi	H	Zmt	Zmb	s1	s2	s3	As1	As2	As3	As4	As7	As8	AsC
S0404V205	ALT-I	02-05	8	8	8	8	8	2	2	4	4	4	0.192	0.232	0.192	0.192	0.192	0.192	na
No special notes.																			

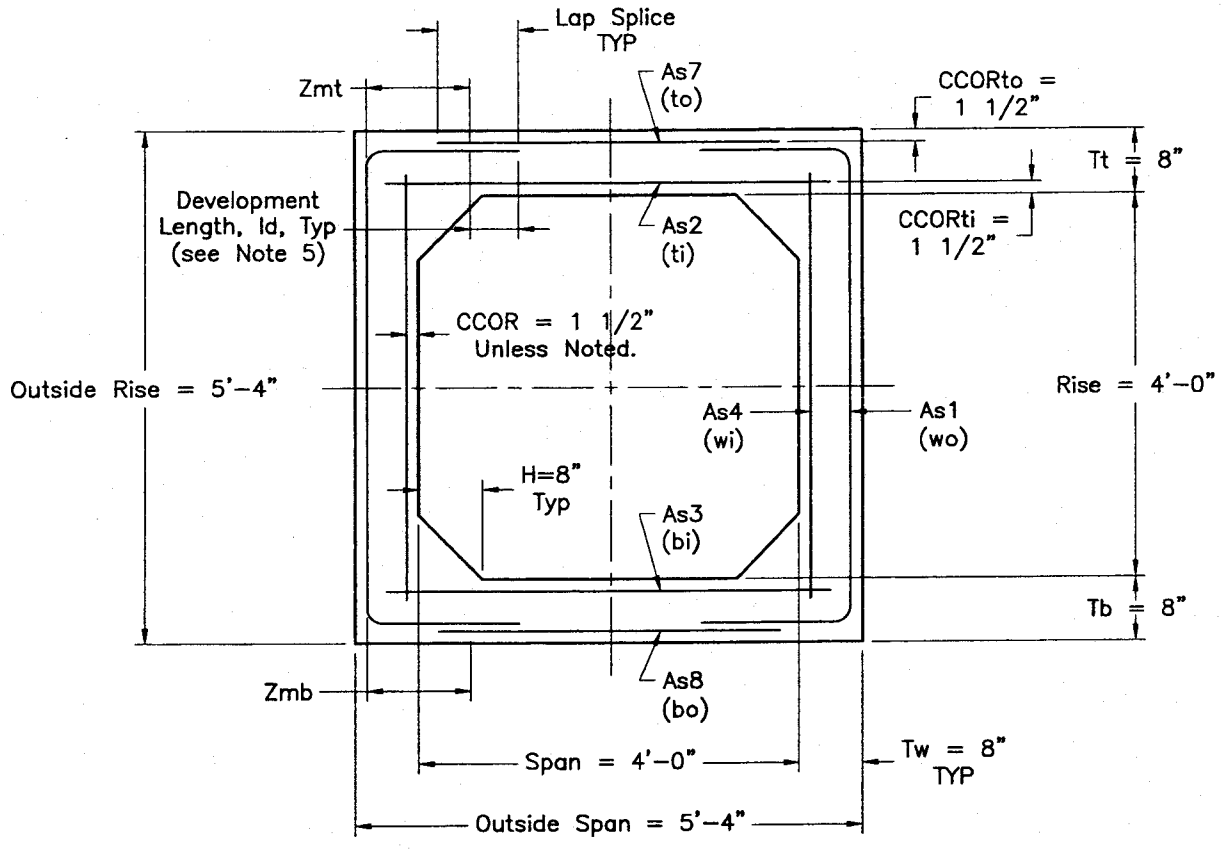

RCB Standard Section

Seal for Precast Only

COMMONWEALTH OF VIRGINIA
THOMAS LAWRENCE
NO. 022827
9-28-2005
PROFESSIONAL ENGINEER

Note:
1) RCB designed in accordance with ASTM C1433 Article 7.2, AASHTO Bridge Specifications Sections 16 and 8. Materials and purchasing in accordance with ASTM C1433. Material properties: f'c = 5 ksi, fy = 65 ksi. Installation criteria: AASHTO Division II Section 27.
2) Concrete Cover Over Reinforcement, CCOR = 1.5". For fills less than 2', top outside CCORto = 2.5", and top inside CCORti = 2.0".
3) Maximum spacings of circumferential wires for As1, As2, and As3 to be s1, s2 and s3 respectively listed in Design Requirements Table. These maximum spacings, limited by design for crack control, may be reduced to 2" minumum.
4) Reinforcement as shown is schematic only. Reinforcement units may be combined and welded wire fabric areas and styles may be substituted provided that the requirements of each unit are met.
5) Development of WWF in accordance with AASHTO Article 8.30; Splices of WWF in accordance with AASHTO Article 8.32, (one space + 2" minimum, more for larger areas).

RCB Reinforcement Section
Single 4'x4' VDOT-ASTM C1433 Alt-I for 2'-5' Fill.

AMERICAST® A Division of VALLEY BLOX, Inc.

Harrisonburg Plant
210 Stone Spring Road
Harrisonburg, VA 22801
1-800-648-2278

Halltown Plant
PO Box 120
Halltown, WV 25423
1-800-648-4580

Ashland Plant
11352 Va. Precast Rd
Ashland, VA 23005
1-800-999-2278

			Date	By/Chk
For:	G Nice	Original:	09-28-2005	TL
Job:	Warhill Site James City Co., VA	Last Rev:		
		Scale:	1/2" = 1'-0"	
Str: RCB-4x4	Contract: D7079	Drw Num:	RS	

Reinforcement Unit Summary: WWF Wire Style / Description							Concrete Cover Over Reinforcement
Tag	N @ Astl	Grid	Wire Sizes	Width(+OH) x Length(OH)	OA Length	R'Coat	
As178	1 @ 0.498	2x8	W8.3 / W4.0	94(+1,+0) x 131(1.5,1.5)	[10'-11"OA]	None	CCORto = 1.5" CCORti = 1.5" CCOR = 1.5" CCOR Tolerance: (-0, +1/2")
As234	1 @ 0.498	2x8	W8.3 / W4.0	94(+1,+0) x 131(1.5,1.5)	[10'-11"OA]	None	
Stock Steel							
As1, As7 and As8 integrated into a single unit: As178							Check Component Details for Additional Reinforcement
As2, As3 and As4 integrated into a single unit: As234							

Extension dimensions approximate, Hold Bend Dimensions.
Circumferential Wires toward Face of Concrete.

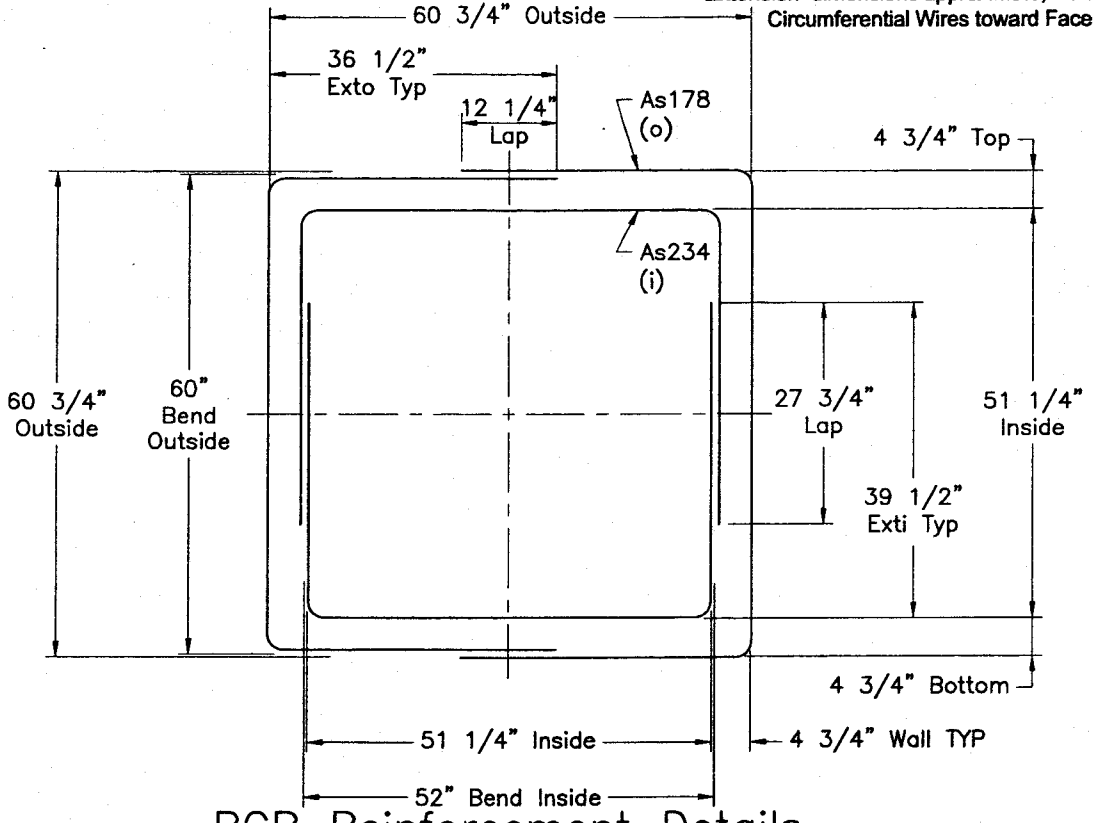

RCB Reinforcement Details

Note:
1) In accordance with ASTM C1433, reinforcement to be A185 Smooth WWF or A497 Deformed WWF. Material properties: f'c = 5 ksi, fy = 65 ksi.
2) Tolerance on Concrete Cover Over Reinforcement to be -0, +1/2".
3) Maximum spacings of circumferential wires for As1, As2, and As3 to be s1, s2 and s3 respectively listed in Design Requirements table. These maximum spacings, limited by design for crack control, may be reduced to 2" minumum.
Spacing of longitudinal wires to be 4" minimum to 8" maximum.
4) Reinforcement as shown is schematic only. Reinforcement units may be combined and welded wire fabric areas and styles may be substituted provided that the requirements of each unit are met.
5) Development of WWF in accordance with AASHTO Article 8.30;
Splices of WWF in accordance with AASHTO Article 8.32,
(one space + 2" minimum, more for larger areas).

Seal for Precast Only

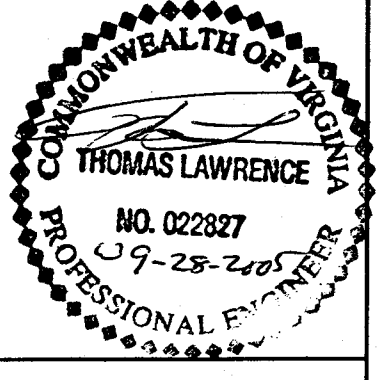

RCB Reinforcement Detail
Single 4'x4' VDOT–ASTM C1433 Alt–I for 2'–5' Fill.

AMERICAST
A Division of VALLEY BLOX, Inc.

Harrisonburg Plant
210 Stone Spring Road
Harrisonburg, VA 22801
1-800-648-2278

Halltown Plant
PO Box 120
Halltown, WV 25423
1-800-648-4580

Ashland Plant
11352 Va. Precast Rd
Ashland, VA 23005
1-800-999-2278

For: G Nice		Date	By/Chk
	Original:	09-28-2005	TL
Job: Warhill Site James City Co., VA	Last Rev:		
	Scale:	1/2" = 1'-0"	
Str: RCB-4x4	Contract: D7079	Drw Num: RD	

BOXCAR

Version 2.03 for Windows
12 March 2001

A Computer Program for the Structural
Design of Reinforced Concrete Box
Culverts

Developed by

Simpson Gumpertz & Heger Inc.
Arlington Massachusetts
in cooperation with

The Federal Highway Administration
and
The American Concrete Pipe Association

The successful application and use of this software product is dependent on the application of skilled engineering judgment and is the responsibility of the user. The user must select input values suitable to his specific installation. The information presented in the computer output is for review, interpretation, application and approval by a qualified engineer.

****

ANY IMPLIED OR EXPRESS WARRANTIES COVERING THE SOFTWARE PROGRAM OR PROGRAM USER MANUAL INCLUDING ANY WARRANTIES OF MERCHANTABILITY OR FITNESS FOR A PARTICULAR PURPOSE ARE EXPRESSLY EXCLUDED. SIMPSON GUMPERTZ & HEGER INC., THE AMERICAN CONCRETE PIPE ASSOCIATION, AND THE FEDERAL HIGHWAY ADMINISTRATION SHALL NOT BE LIABLE FOR SPECIAL, INCIDENTAL, CONSEQUENTIAL INDIRECT OR OTHER SIMILAR DAMAGES ARISING FROM BREACH OF WARRANTY, BREACH OF CONTRACT OR OTHER LEGAL THEORY EVEN IF SUCH PARTIES HAVE BEEN ADVISED OF SUCH DAMAGES.

****

Date: 09-28-2005
Time: 09:52:06

Filename - 0404V205
Job Description - 4'x4' VDOT-ASTM Alt-I 2'-5' Fill

GEOMETRY

Span	4. ft	Top Slab Thickness	8. in.
Rise	4. ft	Bottom Slab Thickness	8. in.
Min. Depth of Fill	2. ft	Sidewall Thickness	8. in.
Max. Depth of Fill	0. ft	Length of Precast Section	8. ft
Depth Increment	0. ft		

HAUNCH DIMENSIONS		CONCRETE COVERS	
Top Vertical	0. in.	Top Outside	1.50 in.
Top Horizontal	0. in.	Bottom Outside	1.50 in.
Bottom Vertical	0. in.	Sidewall Outside	1.50 in.
Bottom Horizontal	0. in.	Top Inside	1.50 in.
		Bottom Inside	1.50 in.
		Sidewall Inside	1.50 in.

MATERIAL PROPERTIES

Main Reinforcing Yield Stress	65000.	psi
Design Concrete Strength	5000.	psi
Concrete Density	150.	pcf

DESIGN SPECIFICATION AASHTO Standard

LOAD FACTORS

Dead Load:	Shear and Moment	1.30
	Thrust	1.00
Live Load:	Shear and Moment	2.17
	Thrust	1.00

LOAD MODIFIERS

Dead Load:	Shear and Moment	1.00
	Thrust	1.00
Live Load:	Shear and Moment	1.00
	Thrust	1.00

STRENGTH REDUCTION FACTORS

Flexure	0.90
Shear	0.85

REINFORCING DATA

	DIAMETER	SPACING
Top Slab Outside Face(AS7)	0.325 in.	4 in.
Bottom Slab Outside Face(AS8)	0.325 in.	4 in.
Sidewall Outside Face(AS1)	0.325 in.	4 in.
Top Slab Inside Face(AS2)	0.325 in.	4 in.
Bottom Slab Inside Face(AS3)	0.325 in.	4 in.
Sidewall Inside Face(AS4)	0.325 in.	4 in.

The diameters are used to estimate depth to tension reinforcing from compression face. They do not represent required reinforcing diameters.

SOIL LOAD DATA

Soil Density	120 pcf
Minimum Lateral Pressure Coefficient	0.13
Maximum Lateral Pressure Coefficient	0.50
Installation Type	Embankment/Compacted
Soil-Structure Interaction Factor	1.075

LIVE LOAD DATA

Live Load	Interstate(Alt. Military Loading)
Live Load Magnitude	24.0 kips
Tire Footprint Length	.0 in.
Tire Footprint Width	.0 in.
Live Load Distribution Factor	1.75
Direction of travel	Parallel to span
Impact Factor	1.10
Lane Load	0.0 psf

SURCHARGE LOADS

Vertical Pressure	0.0 psf
Horiz. Pressure at Culvert Top	0.0 psf
Horiz. Pressure at Culvert Bottom	0.0 psf
Application Code	Additional Dead Load

FLUID LOADS

Depth of Fluid	3.0 ft
Fluid Density	62.5 pcf

MEMBER LOADS
Load Conditions 1 to 10

Load Condition	Member	Load Intensity at Start of Load (k/in./ft)	Load Intensity at End of Load (k/in./ft)	Distance from A-End to Start of Load (in.)	Distance from A-End to End of Load (in.)
1	1	0.008	0.008	0.0	56.0
1	2	0.000	0.000	0.0	0.0
1	3	0.025	0.025	0.0	56.0
1	4	0.000	0.000	0.0	0.0
2	1	0.022	0.022	0.0	56.0
2	2	0.000	0.000	0.0	0.0
2	3	0.022	0.022	0.0	56.0
2	4	0.000	0.000	0.0	0.0
3	1	0.000	0.000	0.0	0.0
3	2	0.003	0.009	0.0	56.0
3	3	0.000	0.000	0.0	0.0
3	4	0.009	0.003	0.0	56.0
4	1	0.000	0.000	0.0	0.0
4	2	0.000	-0.016	16.0	52.0
4	3	-0.002	-0.002	4.0	52.0
4	4	-0.016	0.000	4.0	40.0
5	1	0.000	0.000	0.0	0.0
5	2	0.008	0.028	0.0	56.0
5	3	0.000	0.000	0.0	0.0
5	4	0.028	0.008	0.0	56.0
6	1	0.000	0.000	0.0	0.0
6	2	0.000	0.000	0.0	0.0
6	3	0.000	0.000	0.0	0.0
6	4	0.000	0.000	0.0	0.0
7	1	0.081	0.081	0.0	56.0
7	2	0.000	0.000	0.0	0.0
7	3	0.081	0.081	0.0	56.0
7	4	0.000	0.000	0.0	0.0
8	1	0.000	0.000	0.0	0.0
8	2	0.035	0.010	0.0	56.0
8	3	0.000	0.000	0.0	0.0
8	4	0.010	0.035	0.0	56.0
9	1	0.000	0.000	0.0	56.0
9	2	0.000	0.000	0.0	0.0
9	3	0.000	0.000	0.0	56.0
9	4	0.000	0.000	0.0	0.0
10	1	0.000	0.000	0.0	0.0
10	2	0.000	0.000	0.0	56.0
10	3	0.000	0.000	0.0	0.0
10	4	0.000	0.000	0.0	56.0

MEMBER LOADS
Load Conditions with Concentrated Wheel Loads

Load Condition	Member	Truck Wheel Number	Load Intensity at Start of Load (k/in./ft)	Load Intensity at End of Load (k/in./ft)	Distance from A-End to Start of Load (in.)	Distance from A-End to End of Load (in.)
11	1	1	0.000	0.000	0.0	0.0
11	1	2	0.114	0.114	0.0	21.5
11	1	3	0.000	0.000	0.0	0.0
11	1	4	0.000	0.000	0.0	0.0
11	3	-	0.000	0.152	23.7	56.0
12	1	1	0.000	0.000	0.0	0.0
12	1	2	0.114	0.114	10.3	53.4
12	1	3	0.000	0.000	0.0	0.0
12	1	4	0.000	0.000	0.0	0.0
12	3	-	0.124	0.052	0.0	56.0
13	1	1	0.000	0.000	0.0	0.0
13	1	2	0.114	0.114	10.3	53.4
13	1	3	0.000	0.000	0.0	0.0
13	1	4	0.000	0.000	0.0	0.0
13	3	-	0.124	0.052	0.0	56.0
14	1	1	0.000	0.000	0.0	0.0
14	1	2	0.114	0.114	8.4	51.4
14	1	3	0.000	0.000	0.0	0.0
14	1	4	0.000	0.000	0.0	0.0
14	3	-	0.106	0.070	0.0	56.0
15	1	1	0.000	0.000	0.0	0.0
15	1	2	0.114	0.114	7.5	50.5
15	1	3	0.000	0.000	0.0	0.0
15	1	4	0.000	0.000	0.0	0.0
15	3	-	0.097	0.079	0.0	56.0
16	1	1	0.000	0.000	0.0	0.0
16	1	2	0.114	0.114	6.5	49.5
16	1	3	0.000	0.000	0.0	0.0
16	1	4	0.000	0.000	0.0	0.0
16	3	-	0.088	0.088	0.0	56.0
17	1	1	0.000	0.000	0.0	0.0
17	1	2	0.114	0.114	5.5	48.5
17	1	3	0.000	0.000	0.0	0.0
17	1	4	0.000	0.000	0.0	0.0
17	3	-	0.079	0.097	0.0	56.0
18	1	1	0.000	0.000	0.0	0.0
18	1	2	0.114	0.114	4.6	47.6
18	1	3	0.000	0.000	0.0	0.0
18	1	4	0.000	0.000	0.0	0.0
18	3	-	0.070	0.106	0.0	56.0
19	1	1	0.000	0.000	0.0	0.0
19	1	2	0.114	0.114	2.6	45.7
19	1	3	0.000	0.000	0.0	0.0
19	1	4	0.000	0.000	0.0	0.0
19	3	-	0.052	0.124	0.0	56.0
20	1	1	0.000	0.000	0.0	0.0
20	1	2	0.114	0.114	2.6	45.7

20	1	3	0.000	0.000	0.0	0.0
20	1	4	0.000	0.000	0.0	0.0
20	3	-	0.052	0.124	0.0	56.0
21	1	1	0.000	0.000	0.0	0.0
21	1	2	0.114	0.114	34.5	56.0
21	1	3	0.000	0.000	0.0	0.0
21	1	4	0.000	0.000	0.0	0.0
21	3	-	0.152	0.000	0.0	32.3

ULTIMATE LOAD FORCES

Sect.	Max M+ (in.-kip/ft)	Max V+ (kip/ft)	Max P+ (kip/ft)	Max M- (in.-kip/ft)	Max V- (kip/ft)	Max P- (kip/ft)
1	71.25	.94	.08	.00	-.94	1.39
2	1.97	6.69	.02	-21.89	.00	1.45
3	1.97	6.69	.02	-21.89	.00	1.45
4	.00	.01	1.16	-37.47	-2.01	3.79
5	.00	.01	1.16	-37.47	-2.01	3.79
6	14.17	.15	1.16	-34.11	-.18	3.96
7	.00	1.90	1.16	-35.73	-.13	3.96
8	.00	1.90	1.16	-35.73	-.13	3.96
9	.60	.00	.07	-18.00	-6.49	1.47
10	.60	.00	.07	-18.00	-6.49	1.47
11	65.46	.85	.02	.00	-.85	1.53
12	28.95	5.25	.07	-5.60	.00	1.39
13	28.95	5.25	.07	-5.60	.00	1.39
14	3.58	.04	1.16	-34.85	-1.46	3.79
15	3.58	.04	1.16	-34.85	-1.46	3.79
16	.04	1.45	1.16	-33.65	-.08	3.96
17	.04	1.45	1.16	-33.65	-.08	3.96
18	29.96	.00	.02	-4.48	-4.53	1.53
19	29.96	.00	.02	-4.48	-4.53	1.53

******* SERVICE LOAD REINFORCEMENT TENSILE STRESSES TABLE *******

Design Location	As (in.²/ft)	Service Live Load Stress (ksi)	Total Service Load Stress (ksi)	Allowable Total Service Load Stress (ksi)
1	.192	.44	.00	34.92
2	.192	4.59	5.92	34.92
3	.192	4.59	5.92	34.92
4	.192	6.01	7.07	34.92
5	.192	6.01	7.07	34.92
6	.192	4.26	5.40	34.92
7	.192	3.82	6.74	34.92
8	.192	3.82	6.74	34.92
9	.192	3.37	5.05	34.92
10	.192	3.37	5.05	34.92
11	.192	1.05	.00	34.92
1	.232	21.00	27.13	34.92
6	.192	5.37	3.09	34.92
11	.192	21.00	31.58	34.92

******* FLEXURE DESIGN TABLE *******

Des Sec.	Wall, Sign of Moment	Depth to Reinf.	Ult. Moment	Ult. Thrust	Ult. Flex. Reinf. (1)	Crack Index	Governing Reinf. Area (2)	Governing Mode (3)
1	Top-Neg	6.34	0.0	1.39	0.000	0.00	0.192	Min Stl
2	Top-Neg	6.34	21.9	1.45	0.044	0.17	0.192	Min Stl
3	Top-Neg	6.34	21.9	1.45	0.044	0.17	0.192	Min Stl
4	Side-Neg	6.34	37.5	3.79	0.062	0.20	0.192	Min Stl
5	Side-Neg	6.34	37.5	3.79	0.062	0.20	0.192	Min Stl
6	Side-Neg	6.34	34.1	3.96	0.051	0.15	0.192	Min Stl
7	Side-Neg	6.34	35.7	3.96	0.055	0.19	0.192	Min Stl
8	Side-Neg	6.34	35.7	3.96	0.055	0.19	0.192	Min Stl
9	Bott-Neg	6.34	18.0	1.47	0.033	0.14	0.192	Min Stl
10	Bott-Neg	6.34	18.0	1.47	0.033	0.14	0.192	Min Stl
11	Bott-Neg	6.34	0.0	1.53	0.000	0.00	0.192	Min Stl
1	Top-Pos	6.34	71.2	0.08	0.196	0.78	0.232	Stl Strs
6	Side-Pos	6.34	14.2	1.16	0.026	0.09	0.192	Min Stl
11	Bott-Pos	6.34	65.5	0.02	0.180	0.90	0.192	Min Stl

Notes:

1. Required reinforcing to develop ultimate flexural strength.
2. Reinforcing required to meet all design criteria. The governing criteria is indicated under the column 'Governing Mode'.
3. If governing mode is listed as crack, the reinforcing may be reduced by decreasing the maximum reinforcing spacing.
4. Crack Index is defined as the total service load stress divided by the allowable total service load stress.
5. Minimum flexural reinforcing computed as 0.002 times the gross concrete section
6. Units for Flexure Design Table:

Depth to Reinforcement	(in.)
Ultimate Moment	(in.-kip/ft)
Ultimate Thrust	(kip/ft)
Ultimate Flexural Reinforcing	(in.^{2}/ft)
Governing Reinf. Area	(in.^{2}/ft)

******* SHEAR DESIGN METHOD 1 - AASHTO *******

Location	Ultimate Shear (kip/ft)	Allowable Shear (kip/ft)	Diagonal Tension Index	Depth to Reinf. (in.)	Stirrups Required?
12	5.2	9.1	.57	6.34	No
13	5.2	9.1	.57	6.34	No
14	1.5	9.1	.16	6.34	No
15	1.5	9.1	.16	6.34	No
16	1.5	9.1	.16	6.34	No
17	1.5	9.1	.16	6.34	No
18	4.5	9.1	.50	6.34	No
19	4.5	9.1	.50	6.34	No

Concrete shear strength taken as 2 times the square root of f'c, f'c in psi.

BOX CULVERT DESIGN SUMMARY SHEET
4.00 ft Span x 4.00 ft Rise

****

INSTALLATION DATA

Height of Fill Over Culvert, ft	2.00
Soil Unit Weight, pcf	120.
Minimum Lateral Soil Pressure Coefficient	0.125
Maximum Lateral Soil Pressure Coefficient	0.500
Soil-Structure Interaction Factor	1.075
Installation Type	Embankment/Compacted

LOADING DATA

Design Specification	AASHTO Standard
Dead Load Factor - Moment and Shear	1.30
Dead Load Factor - Thrust	1.00
Live Load Factor - Moment and Shear	2.17
Live Load Factor - Thrust	1.00
Dead Load Modifier - Moment and Shear	1.00
Dead Load Modifier - Thrust	1.00
Live Load Modifier - Moment and Shear	1.00
Live Load Modifier - Thrust	1.00
Strength Reduction Factor-Flexure	0.90
Strength Reduction Factor-Diagonal Tension	0.85
Live Load	
Live Load Type	AASHTO Interstate/HS
Live Load Magnitude, kips	24.0
Tire Footprint Length, in.	1.0
Tire Footprint Width, in.	1.0
Live Load Distribution Factor	1.75
Direction of travel	Parallel to span
Impact Factor	1.10
Lane Load, psf	0.0

MATERIAL PROPERTIES

Minimum Specified Reinforcing Yield Strength, ksi	65.0
Concrete - Specified Compressive Strength, ksi	5.0

GEOMETRY

Top Slab Thickness, in.	8.0
Side Wall Thickness, in.	8.0
Bottom Slab Thickness, in.	8.0
Top Horizontal Haunch Dimension, in.	0.0
Bottom Horizontal Haunch Dimension, in.	0.0
Top Vertical Haunch Dimension, in.	0.0

G E O M E T R Y (Continued)

Bottom Vertical Haunch Dimension, in.	0.0
Concrete Cover Over Steel, in.	
Top Slab - Outside Face	1.50
Bottom Slab - Outside Face	1.50
Side Wall - Outside Face	1.50
Top Slab - Inside Face	1.50
Bottom Slab - Inside Face	1.50
Side Wall - Inside Face	1.50

R E I N F O R C I N G D A T A

LOCATION	AREA (in.²/ft)	STIRRUPS REQUIRED?
TRANSVERSE		
Side Wall - Outside Face (AS1)	0.192	No
Top Slab - Inside Face (AS2)	0.232	No
Bottom Slab - Inside Face (AS3)	0.192	No
Side Wall - Inside Face (AS4)	0.192	No
Top Slab - Outside Face (AS7)	0.192	No
Bottom Slab - Outside Face (AS8)	0.192	No

Notes:

1 Top slab outside face steel(AS7) must extend completely across the top slab. The sidewall outside face steel (AS1) must be bent at the corner and extended across the top slab sufficiently to meet AASHTO requirements for tension laps.

2 Bottom slab outside face steel (AS8) must extend completely across the bottom slab. The sidewall outside face steel (AS1) must be bent at the corner and extended across the bottom slab sufficiently to meet AASHTO requirements for tension laps.

3 Negative moment may exist in the entire top slab

4 Negative moment may exist in the entire bottom slab

COMMONWEALTH OF VIRGINIA
THOMAS LAWRENCE
NO. 022827
09-28-2005
PROFESSIONAL ENGINEER

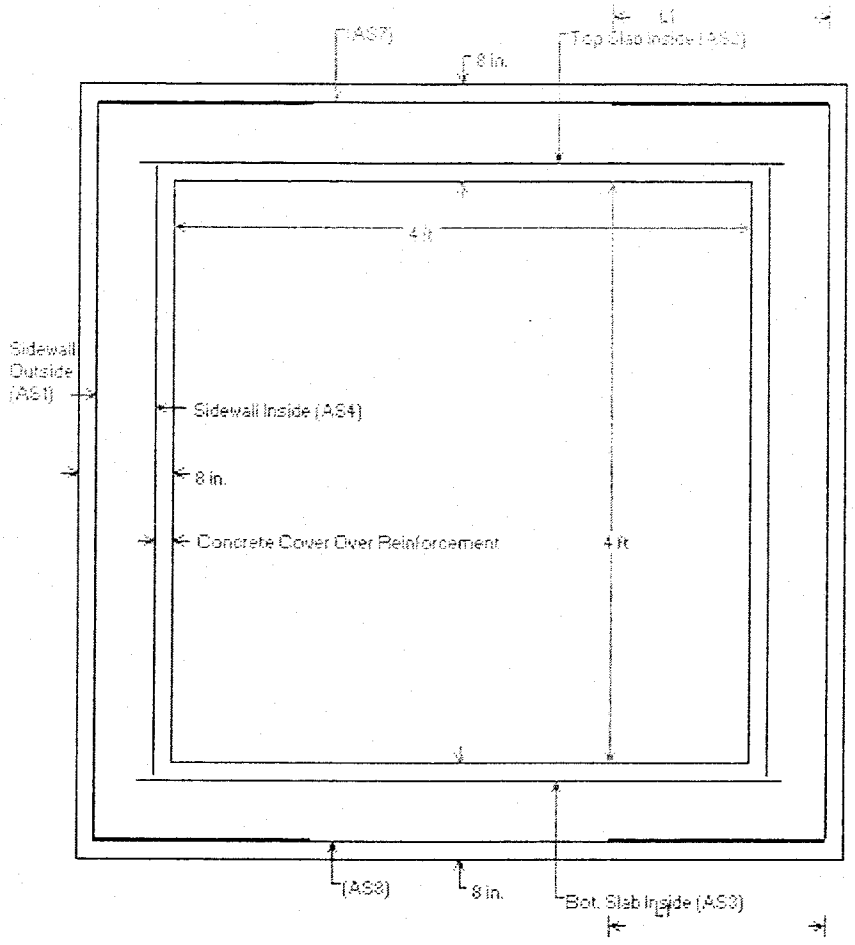

* <L1> is Splice Length
* (AS7) is Top Slab Outside
* (AS8) is Bottom Slab Outside
* See Box Culvert Design Summary Sheet for transverse and distribution reinforcement, as required.
* For sidewall thicknesses of 6 in. and above, extend AS2 and AS3 a min. of 4 in. beyond the inside face of the sidewall. For thicknesses less than 6 in., extend AS2 and AS3 at least to within 1-1/2 in. of the outside face of the sidewall.

Notes:

1) Other reinforcement schemes that provide the required reinforcement areas at all locations identified in the program output are acceptable.
2) Longitudinal reinforcement is not shown for clarity, see AASHTO M259 for longitudinal reinforcement and for additional requirements.

Geometry:

	Use		Defaults	
RCB Rise	4	Feet	6	Feet
Type (I,II)	I		I	
Slope (_:1)	2:1		2	
Wing Angle	45°		45°	
Scour Depth	30"			
Curtain Style	CIP			

[see Stability for Lt and Lh]

Stem Dim's:	feet	inches			inches
Wing Hgt, K	5.50'	66"	5.50'	OverAllHgt	74"
Wing Width, M	10.00'	120"	11.00'	OverAllWidth	132"
Tip Hgt, L	1.75'	21"	1.83'		

Thichnesses:	inches		Increments:	Use	Defaults
Toe, Ttoe	8"	8"	Min Heel	6"	6"
Heel, Th	8"	8"	Heel Incr	6"	6"
Stem, Ts	8"	8"			
			Min Toe	8"	8"
			Toe Incr	8"	8"
			Th Incr	4"	4"

WingAngle RAD	0.785398	cos	sin	Degrees
SigmaNormal	0.339837	0.942809	0.333333	19.471°
SigmaParrallel	0.339837	0.942809	0.333333	19.471°
(Sloped) FillHgt	80.36"	(varies with Lh)		

COMMONWEALTH OF VIRGINIA
THOMAS LAWRENCE
NO. 022827
9-28-2005
PROFESSIONAL ENGINEER

Design Parameters:

Installation

	Use	Defaults
LLsur Hsur	0	0
rhoE	120 pcf	120
Ka	0.25	0.25
Kp	4	4.00
Hp	0	0.00
mu Sliding	0.5	0.50
Min FSot	2.00	2.00
Min FSs	1.50	1.50
Pmax	3000 psf	3000

Reinf Conc Design

rhoC	150 pcf	150
fc	4000 psi	4000
fy	60000 psi	60000
Es	29000000 psi	29000000
Ec	3604997 psi	3604997

Zmax 98 kips/in

External Wts and Forces:

WtStemVoid	-Ts * (WingHgt - TipHgt) * WingWidth / 12 ^ 3 * rhoC
	-3750 LBs (void not used in stability)
WtStem	Ts * OAH * WingWidth / 12 ^ 3 * rhoC
	6167 LBs
WtHeel	Lh * Th * WingWidth / 12 ^ 3 * rhoC
	1500 LBs
WtToe	Lt * Ttoe * WingWidth / 12 ^ 3 * rhoC
	667 LBs
WtCol	0 LBs
WtBWW	8333 LBs

Overturning Forces:

OTfSur	= Ka * rhoE * Hsur * OAH * WingWidth / 12 ^ 3
	0 LBs
OTfFill	= 0.5 * Ka * rhoE * FillHgt * FillHgt * WingWidth / 12 ^ 3 * cos(SigmaNormal)
	6343 LBs
OTfPassive	0 LBs
SlidingForce	6343 LBs

Resisting Force of Sloped Fill:

RfFill	= 0.5 * Ka * rhoE * FillHgt * FillHgt * WingWidth / 12 ^ 3 * sin(SigmaNormal)
	2242 LBs

Fill Wts:

WtFillOnHeel	Lh * (OAH - Th + Hsur) * WingWidth / 12 ^ 3 * rhoE
	9900 LBs
WtSlopedFillOnHeel	Lh * Lh * TAN(SigmaNormal) / 2 * WingWidth / 12 ^ 3 * rhoE
	477 LBs
WtFillOnToe	0 LBs
Resultant	20953 LBs

External Moments:

[Moments taken about Bottom-Front Edge of Toe]

Overturning Moments:

OTfSur	0 LBs	
yrSurcharge = OAH		
	74"	
MotSur	0 in-kips	
OTfFill	6343	
yrFill FillHgt / 3		
	27"	
MotFill	170 in-kips	
OTfPassive	0	
yrPassive = Hp / 3		
yrPassive	0	
MotPassive =	0	
Mot = = MotFill + MotPassive		
Mot =	170 in-kips	

Resisting Moments:

xrRfFill = Lt + Ts + Lh		
	34"	
MrRfFill	76 in-kips	
xrFillOnHeel = Lt + Ts + Lh / 2		
	25"	
MrFillOnHeel	248 in-kips	
xrSlopedFillOnHeel = Lt + Ts + Lh * 2 / 3		
	28"	
MrSlopedFillOnHeel	13	
xrFillOnToe	4"	
MrFillOnToe	0 in-kips	
Mresist =	451 in-kips	

Wing Wt Moments:
(centriods)

xrHeel	= Lt + Ts + Lh / 2	25"
yrHeel	= Th / 2	4"
xrStem	= Lt + Ts / 2	12"
yrStem	= OAH / 2	37"
xrToe	= Lt / 2	4"
yrToe	= Ttoe / 2	4"
xrCol	0	
yrCol	0	
MrHeel	38	
MrStem	74	
MrToe	3	
MrCol	0	
MrWt	114 in-kips	
cgx =	MrWt/WtBWW	13.7
MyHeel	6	
MyStem	228	
MyToe	3	
MyCol	0	
MyWt	237 in-kips	
cgy =	MyWt/WtBWW	28.42

Stability:

Lh = 18 [iterate Lh]
Lt = 8
OverAllLength = 34

Overtuning:

Fsot = Mresist / Mot
= 2.66 OK

Sliding:

FSs = muS * Resultant / SlidingForce
= 1.65 OK

Bearing Pressure:

xr = = (Mresist + MrFillOnToe - Mot) * 1000 / (Resultant + WtFillOnToe)
= 13.42841

e = 3.571592

eIndex = 0.630281 if Abs(eIndex) > 1, Pressure Distribution is Trianglar
if Abs(eIndex) <= 1, Pressure Distribution is Trapezoidal

Ptri = 2 * (Resultant + WtFillOnToe) / (3 * xr / 12 * WingWidth / 12)
= 1248
Ptrap = (Resultant + WtFillOnToe) / (OAL / 12 * WingWidth / 12) * (1 + 6 * ABS(e) / OAL)
= 1206

P = 1206 psf
OK

Internal Forces:

CCORs = 1.50"
d = Ts - CCORs - 0.25
= 6.24"
b = 12.00"

BetaE = 1.30
DLfmv = 1.30
DLfn = 1.00
UF = 12 inches per Unit foot

Mu = Lh / OAL * Mot * BetaE * DLfmv / WingWidth * UF
= 15.2 in-kips/LF

(see Reinf Design)

Vu = Lh / OAL * Resultant * BetaE * DLfmv / WingWidth * UF
= 1875 LBs/LF

Vc = 0.85 * 2 * SQRT(fc) * b * d
= 8051 LBs/LF

Shear Index, Vu/Vc = 0.23 OK

Reinforcement Design Calculations:

AsFlex = (g * phif * d - Nu - SQR(g * (g * (phif * d)^2 - Nu * (2 * phif * d -h) - 2 * Mu))) / fy
where g = 0.85 * b * fc = 40800 fc = 4000 fy = 60000

b = 12" phif = 0.9 PI = 3.141593

Es = 29,000,000 psi (non-prestressed) Ec = 57000*Sqrt(fc) = 3,604,997 n = Es/Ec = 8.04 z = 98

RCB Wing Wall

As = 0.393 1 @ D20.0 @ 6" plus none

		Ms =	9 in-kips
h =	8 in	Mu =	15 in-kips
d =	6.24 in	Nu =	0 kips

AsFlex =	0.045 Sqin/LF	rhoRf =	0.001
		MaxSpa =	4.31"
Qty #4 / LF =	0.2 Bars		
Qty #5 / LF =	0.1 Bars		
Qty #6 / LF =	0.1 Bars		
As D20.0 @ 6" =	0.393 Sqin/LF	use:	1
Add'l Qty #4 / LF =	-1.8 Bars	or = #4 @	-6"
Add'l Qty #5 / LF =	-1.1 Bars	or = #5 @	-6"
Add'l Qty #6 / LF =	-0.8 Bars	or = #6 @	-12"
		use #0 @	0"

use: 1 @ D20.0 @ 6" plus none
AsProvide = 0.393 Sqin/LF
rhoRfp = 0.005 MaxSpa = 12.00"

Scott Thomas

From: Scott Thomas
Sent: Thursday, September 01, 2005 12:00 PM
To: Darryl Cook
Cc: Mike Woolson; William A. Cain
Subject: Warhill PPEA: Chesapeake Bay Exception

Attached are all items necessary for a Chesapeake Bay exception request needed for the **Warhill PPEA: District Park West Pond PC105 improvements**. In late May I approached you on how we are going to handle the exception requests necessary for the east and west dam as improvements are necessary but the current environmental inventory for the Warhill Tract shows the dams as in RPA/RPA buffer. Your preliminary determination at that time was that the exceptions will be administrative rather than a Ches Bay board review item. This was after you referred to the Ches Bay Act final regulation amendments adopted Dec 10, 2001 (effective March 1, 2002) which stated for dams/flood control structures "*any maintenance, alteration, use or improvement to an existing structure that does not degrade the quality of surface water discharge, as determined by local government, may be exempted from the requirements of this subsection.*" This preliminary determination was then forwarded to Timmons via email dated May 26th 2005 (copied to DEC) along with a list of items we requested from Timmons. They have now provided me with this information for your review and processing.

Attached is the following:

1. Exception Request letter dated Aug 31 to DEC.
2. Minor WQIA dated Aug 4
3. 8-1/2 x 11 Exhibit Map to accompany the MiWQIA.

Some other important things to remember:

1. The USACOE wetland permit has been received. It is 05-R1554 dated June 16, 2005.
2. An Alteration and Operation & Maintenance Permits have been issued from the State Dam Safety Board. The permit number is # 09528.
3. Improvements to the dam and use of the regional BMP is consistent strategies from Subwatershed 205 of the approved Powhatan Creek Watershed Management Plan (R205-4, ranked # 3 of 9)

Welcome to the wonderful world of PPEA. As expected, because it's associated with the Warhill PPEA, it is super-expedited and must be processed rather quickly. To save time, you can work directly with Andrew Gould with Timmons if you have any comments on the material or require changes. His contact information is as follows: Phone 804-200-6412, Email andrew.gould@timmons.com. Or if you prefer, you can work it through me and I will correspond with Drew. I think the approval letter should be directed to Steve Hicks with copy to me, Drew and Curtis Contracting Inc.

I will not be able to proceed with approval of the E&S plan which would delay issuance of a Land-Disturbing permit for this portion of the project until this is processed and approved accordingly. You have some time though as I am currently reviewing the revised plans. Also, this template can then be used for permanent improvements necessary for the District Park East Pond PC 106, once we receive that information. The east pond work is not lagging too far behind.

Scott J. Thomas, P.E.
James City County
Environmental Division

Scott Thomas

From: Scott Thomas

Sent: Tuesday, June 14, 2005 10:11 AM

To: 'Andrew Gould'

Cc: Wayland Bass; Steven W. Hicks; Christopher Johnson; Matthew Arcieri; 'Bill Richards'

Subject: RE: PPEA stormwater calculations

As we discussed, I got these computations via email from you before I received the revised storm trunk drawings. As I reviewed some of the computations already, I would prefer to get those comments to you rather than wait. When I review the revised storm trunk drawings under (Storm Trunk, E&SC # 3; SP-59-05) I can include them again. But I think it's better to give you a jump start, especially those related to the west dam improvement.

Storm Trunk Computations (E&SC # 3)

As I did not have the revised plan, I will check pipe/inlet data in the design report against the construction plan later.

Pipe velocity for the 36-inch pipe between inlet # 5-10 to # 5-11 and the 36-inch pipe between inlet # 5-11 to MH-3 is shown at 71.9 fps. This is unacceptable even for concrete pipe. Check these numbers.

As expected, the storm computations show two pipe segments inadequate to handle the 10-year storm and will be in surcharge condition. The pipe segments are the 36-inch pipe between inlet # 5-10 to # 5-11 and the 36-inch pipe between inlet # 5-11 to MH-33.

As expected, many of the pipe segments do not have adequate capacity for the 100-year design "check" storm event. This is not an issue with us.

Total time of concentration computed for the storm trunk line (23 minutes) does not match that used for west pond improvement design (0.55 hours/33 minutes). Be reasonably consistent.

As a note, the inlet hydraulic grade line computations show that none of the inlets/structures will surcharge for the 10-year design storm event. Preliminary design expected some surcharging at certain inlets. If surcharging of the system is not occurring - great, but make sure the computations are correct as this was an expected condition.

No comments on the inlet spread computations. Make sure inlet lengths per the design computations match the construction plan.

The velocity at the end of the paved channel which connects the storm trunk pipe to the forebay is shown as 17.86 feet per second. An energy dissipator device will be necessary at the outfall end of the channel.

District Park West Pond Improvement Computations (Phase 3A & 3B)

To avoid confusion between the east and west pond, make sure computations show the County BMP ID Code Number designations (west pond PC 105, east pond PC 106). I don't want to be confusing pond computations.

The computations do not show 24-hour detention of the 1-year, 24 hour storm inflow to meet County Stream Channel Protection requirements. Based on the hydrology, it appears the 1-year storm inflow volume into the west pond is 21.447 acre-ft. Computations must show that this volume does not drawdown quicker than 24-hours through the weir box.

The Pondpack routing shows outflow for the BMP after it is improved for the 1-, 2-, 5-, 10-, 25-, 50- and 100-year events. Even though it will be designed to meet the County's stream channel protection criteria, we would want to compare outflows from the pond as modified to the pond in it's current condition for the 1-, 2-, 10- and 100- year event

Total time of concentration computed for the storm trunk line (23 minutes) does not match that used for west pond improvement design (0.55 hours/33 minutes). Be reasonably consistent.

The PondPack model used for pond design shows a user defined value input for time of concentration at 0.55 hours. Provide more information.

PondPack hydrology used for pond design shows a total drainage area of 199.90 acres with a composite CN of 83. Most of the runoff curve numbers seem consistent for upland development except for the TNCC subarea (CN of 88, 52.1 acres) and for the Stadium (CN of 88; 31.8 acres). Check these values against current known site layouts.

Forebay sizing computations show a drainage area of 187.72 acres; however, pond design shows 199.9 acres. Drainage areas must be consistent throughout the design report.

Impervious area computations show a total of 58.77 acres of impervious area upland. Ensure this number includes impervious cover associated with the L-Road, the stadium access road and the Phase I basketball facility within the District Park. Our Division is currently reviewing a plan for the Phase I basketball facility (SP-66-05). It shows proposed impervious cover for the site at 1.26 acres.

Check the stage-storage curve developed for the west pond. Storage at Elevation 61 is 22.76 acre-feet and storage at Elevation 64 is 21.3 acre-feet. It would be expected that the higher elevation would have more storage and there may be a bust in the table.

It would appear that based on the routing for the 100-year storm, that design high water elevation is at El. 64.09; therefore, minimum top of dam elevation would be at El. 65.09.

Outlet Flow. There appears to be a problem with the composite outflow curve summary (page 5.05 of the PondPack Model) as there is no flow (0 cfs) at El. 61. It would be expected that there is flow through weir # 4 (0.83 feet) at this elevation.

Pond Outlet Structure. It would appear the height of the outlet pipe box culvert through the dam (4 feet) would exceed the height of the control weir box (3.62 feet). Therefore the top of the box culvert is higher than the principal flow control structure. Ensure this is an arrangement that is preferred. If it is the pond model may need to be adjusted accordingly.

This is all I have for now. Let me know if you have any questions. I will continue with my review of the revised plan set as received yesterday at the June 13th team meeting.

Scott J. Thomas, P.E.
James City County
Environmental Division

-----Original Message-----
From: Andrew Gould [mailto:Andrew.Gould@timmons.com]
Sent: Wednesday, June 08, 2005 4:12 PM
To: Wayland Bass; Scott Thomas
Cc: Chris Kiefer; Mark Parrott; Brent Epps; Ray Nice; Andy Curtis
Subject: PPEA stormwater calculations
Importance: High

Wayland and Scott - please find attached stormwater calculations for the PPEA project.

These include:
- Hydrology Calculations
- HGL calcs
- Inlet spread calcs
- Concrete channel calcs
- Forebay sizing calcs
- Preliminary pond routing of western pond dam after improvements

Please let me know if you would like me to submit these in hardcopy format.

Also please let me know once you have had a chance to review these. We can get together if you would like to go through them together.

Drew

Scott Thomas

From: Andrew Gould [Andrew.Gould@timmons.com]
Sent: Wednesday, June 08, 2005 4:12 PM
To: Wayland Bass; Scott Thomas
Cc: Chris Kiefer; Mark Parrott; Brent Epps; Ray Nice; Andy Curtis
Subject: PPEA stormwater calculations
Importance: High

Wayland and Scott - please find attached stormwater calculations for the PPEA project.

These include:
- Hydrology Calculations
- HGL calcs
- Inlet spread calcs
- Concrete channel calcs
- Forebay sizing calcs
- Preliminary pond routing of western pond dam after improvements

Please let me know if you would like me to submit these in hardcopy format.

Also please let me know once you have had a chance to review these. We can get together if you would like to go through them together.

Drew

Scott Thomas

From: Scott Thomas
Sent: Friday, June 24, 2005 11:43 AM
To: 'Gordon, Michael'
Cc: Wayland Bass; William Porter
Subject: Zion Baptist Church Expansion

GPIN 2430100047
6373 Richmond Road

Mike – As promised I am responding back to you with some guidance as you move forward with the expansion plan for the Zion Baptist Church at the intersection of Richmond and Centerville Roads. Some time ago we met at the site and discussed what would be required for erosion and sediment control and stormwater management for the building and parking additions as envisioned. At that time, the proposed improvements under the Warhill PPEA and TNCC was not well-defined and I instructed you that additional impervious cover for the expansion would be subject to water quality and County stream channel protection requirements.

Well a lot has happened in the past year or so as it pertains to the Warhill PPEA project and I can give you some better guidance. As part of the Warhill PPEA project, the District Park West pond (BMP ID Code: PC105) will be upgraded as a BMP to serve the outlet mall, the TNCC site and the road improvements for the Warhill tract. This basin will serve about 200 acres of which about 60 acres will be impervious and will be upgraded to provide water quality and stream channel protection control for the upland improvements. As drainage from the Zion Church site will eventually get into manmade drainage systems which gets into the proposed storm trunk line and go to the District Park West Pond, it is our Division's intention to include the church site in this framework. I have briefly discussed this intent with Bill Porter, Assistant County Administrator, who is currently negotiating with the church due to Centerville Road and Richmond Road expansions necessary under the PPEA project and Wayland Bass, County Engineer, who is assigned to the stormwater management team for the Warhill PPEA project. I believe we are all in agreement with this at this time.

Therefore, here is revised guidance. You can attach this email to your plan of development submission when you finally submit it to Planning.

- Provide an Environmental Inventory
- Provide an Erosion and Sediment Control Plan for land-disturbing activities for the expansion portion.
- Address Water Quality requirements with onsite BMPs.
- Stream Channel Protection requirements will be handled by the downstream regional facility and will not be required to be addressed onsite.
- Address Special Stormwater Criteria which was adopted by the BOS on December 14, 2005 (attached). SSC is based on the anticipated disturbed area for the project and there are about 40 choices to choose from to comply with the criteria.

It would be anticipated that there will be a strip of wooded buffer natural area between the church and the TNCC improvement site; therefore, although stream channel protection will not be required onsite, the outfall of proposed onsite drainage system (channel, pipe, etc.) should be non-erosive and comply with Minimum Standard # 19 of the Virginia Erosion and Sediment Control regulations. Simply put a level spreader or other similar feature should be placed at the outfall of the proposed system to ensure that gully erosion does not occur within the natural wooded area.

I know it's early in your process, but we are advancing with the design of the upgrades for the District Park West Pond rather quickly. I prefer that we incorporate the runoff characteristics of the proposed church site now into that design – at least as much as we know at this point. Therefore, I request that you provide me some preliminary site information to the best of your knowledge at this point. I need the following information on the church site.

Total Site Area – Based on County GIS, the parcel is 2.45 acres
Existing Impervious Cover of the Site
Proposed Impervious Cover Associated with the expansion

We will need this to tabulate total impervious cover to the west pond and also to determine runoff curve numbers for the drainage subarea the church is in when it is completed (for stream channel protection purposes. Please email me back and I will forward it on appropriately.

Scott J. Thomas, P.E.
James City County
Environmental Division

Visit:
http://www.james-city.va.us/resources/devmgmt/div_devmgmt_environ.html
and
www.protectedwithpride.org

Scott Thomas --

From: Scott Thomas

Sent: Tuesday, June 14, 2005 10:11 AM

To: 'Andrew Gould'

Cc: Wayland Bass; Steven W. Hicks; Christopher Johnson; Matthew Arcieri; 'Bill Richards'

Subject: RE: PPEA stormwater calculations

As we discussed, I got these computations via email from you before I received the revised storm trunk drawings. As I reviewed some of the computations already, I would prefer to get those comments to you rather than wait. When I review the revised storm trunk drawings under (Storm Trunk, E&SC # 3; SP-59-05) I can include them again. But I think it's better to give you a jump start, especially those related to the west dam improvement.

Storm Trunk Computations (E&SC # 3)

As I did not have the revised plan, I will check pipe/inlet data in the design report against the construction plan later.

✓ Pipe velocity for the 36-inch pipe between inlet # 5-10 to # 5-11 and the 36-inch pipe between inlet # 5-11 to MH-3 is shown at 71.9 fps. This is unacceptable even for concrete pipe. Check these numbers. (TYPO)

✓ As expected, the storm computations show two pipe segments inadequate to handle the 10-year storm and will be in surcharge condition. The pipe segments are the 36-inch pipe between inlet # 5-10 to # 5-11 and the 36-inch pipe between inlet # 5-11 to MH-33. AWARE BUT OK

✓ As expected, many of the pipe segments do not have adequate capacity for the 100-year design "check" storm event. This is not an issue with us.

✓ Total time of concentration computed for the storm trunk line (23 minutes) does not match that used for west pond improvement design (0.55 hours/33 minutes). Be reasonably consistent. REVISE WEST POND. STORM AT 23 MINUTES.

✓ As a note, the inlet hydraulic grade line computations show that none of the inlets/structures will surcharge for the 10-year design storm event. Preliminary design expected some surcharging at certain inlets. If surcharging of the system is not occurring - great, but make sure the computations are correct as this was an expected condition. NO INLET SURCHARGING EVER EXPECTED. W/O SCHOOL 72" IS OK.

✓ No comments on the inlet spread computations. Make sure inlet lengths per the design computations match the construction plan. WILL DO

✓ The velocity at the end of the paved channel which connects the storm trunk pipe to the forebay is shown as 17.86 feet per second. An energy dissipator device will be necessary at the outfall end of the channel.

District Park West Pond Improvement Computations (Phase 3A & 3B)

To avoid confusion between the east and west pond, make sure computations show the County BMP ID Code Number designations (west pond PC 105, east pond PC 106). I don't want to be confusing pond computations. OK ✓

The computations do not show 24-hour detention of the 1-year, 24 hour storm inflow to meet County Stream Channel Protection requirements. Based on the hydrology, it appears the 1-year storm inflow volume into the west pond is 21.447 acre-ft. Computations must show that this volume does not drawdown quicker than 24-hours through the weir box. WILL SHOW

The Pondpack routing shows outflow for the BMP after it is improved for the 1-, 2-, 5-, 10-, 25-, 50- and 100-year events. Even though it will be designed to meet the County's stream channel protection criteria, we would want to compare outflows from the pond as modified to the pond in it's current condition for the 1-, 2-, 10- and 100- year event MAY PROVIDE

Total time of concentration computed for the storm trunk line (23 minutes) does not match that used for west pond improvement design (0.55 hours/33 minutes). Be reasonably consistent. WILL USE 23 MIN.

The PondPack model used for pond design shows a user defined value input for time of concentration at 0.55 hours. Provide more information. 23 MIN.

PondPack hydrology used for pond design shows a total drainage area of 199.90 acres with a composite CN of 83. Most of the runoff curve numbers seem consistent for upland development except for the TNCC subarea (CN of 88, 52.1 acres) and for the Stadium (CN of 88; 31.8 acres). Check these values against current known site layouts.

Forebay sizing computations show a drainage area of 187.72 acres; however, pond design shows 199.9 acres. Drainage areas must be consistent throughout the design report.

Impervious area computations show a total of 58.77 acres of impervious area upland. Ensure this number includes impervious cover associated with the L-Road, the stadium access road and the Phase I basketball facility within the District Park. Our Division is currently reviewing a plan for the Phase I basketball facility (SP-66-05). It shows proposed impervious cover for the site at 1.26 acres. HAS 3X REQUIRED

Check the stage-storage curve developed for the west pond. Storage at Elevation 61 is 22.76 acre-feet and storage at Elevation 64 is 21.3 acre-feet. It would be expected that the higher elevation would have more storage and there may be a bust in the table. WILL FIX

It would appear that based on the routing for the 100-year storm, that design high water elevation is at El. 64.09; therefore, minimum top of dam elevation would be at El. 65.09. NOW DHW 63.81 TOD 65.0

Outlet Flow. There appears to be a problem with the composite outflow curve summary (page 5.05 of the PondPack Model) as there is no flow (0 cfs) at El. 61. It would be expected that there is flow through weir # 4 (0.83 feet) at this elevation.

Pond Outlet Structure. It would appear the height of the outlet pipe box culvert through the dam (4 feet) would exceed the height of the control weir box (3.62 feet). Therefore the top of the box culvert is higher than the principal flow control structure. Ensure this is an arrangement that is preferred. If it is the pond model may need to be adjusted accordingly.

This is all I have for now. Let me know if you have any questions. I will continue with my review of the revised plan set as received yesterday at the June 13th team meeting.

Scott J. Thomas, P.E.
James City County
Environmental Division

-----Original Message-----
From: Andrew Gould [mailto:Andrew.Gould@timmons.com]
Sent: Wednesday, June 08, 2005 4:12 PM
To: Wayland Bass; Scott Thomas
Cc: Chris Kiefer; Mark Parrott; Brent Epps; Ray Nice; Andy Curtis
Subject: PPEA stormwater calculations
Importance: High

Wayland and Scott - please find attached stormwater calculations for the PPEA project.

These include:

- Hydrology Calculations
- HGL calcs
- Inlet spread calcs
- Concrete channel calcs
- Forebay sizing calcs
- Preliminary pond routing of western pond dam after improvements

James City County – PPEA Site
Stormwater Pond Sediment Forebay Calculations

June 3, 2005

The James City County Stormwater BMP regulations require a sediment forebay sized to contain 0.1 inches per impervious acre of contributing drainage.

The Virginia Stormwater Management Handbook Minimum Standard 3.04 requires a sediment forebay sized to contain a maximum of 0.25 inches or a minimum of 0.1 inches per impervious acre of contributing drainage.

Total drainage area to basin = 187.72 acres — Pond Design shows 199.9 AC.
Total amount of impervious area = 58.77 acres

Volume formula: Vr (ft^3) = Impervious area (ft^2) * (inches of rainfall per imp. acre) / (12 in/ft)

*Forebay volume required for 0.25 inches of rainfall per impervious acre

Vr (ft^3) = 2,560,021.2 (ft^2) * (0.25 in) / (12 in/ft) = 53,333 ft^3

*Forebay volume required for 0.1 inches of rainfall per impervious acre

Vr (ft^3) = 2,560,021.2 (ft^2) * (0.1 in) / (12 in/ft) = 21,333 ft^3

Forebay volume provided at elevation 58.0 = 56,079 ft^3

PPEA Impervious Area Summary

Lightfoot/Warhill Site
James City County, Virginia

Does it include:
Outlet Mall (14.3AC.?)
L-Road
Stadium Access Rd.
PH 1 BB FACILITY

Total Site Area 187.72 acres

Impervious Area Breakout:

TNCC Site:		
Buildings	4.54	acres
Parking/Roads	20.68	acres
Subtotal:	25.22	acres
Stadium Site:		
Parking/Roads	8.64	acres
Buildings/stands	1.21	acres
Subtotal:	9.85	acres
Sports complex:		
Parking/Roads	3.58	acres
Buildings	1.32	acres
Subtotal:	4.90	acres
Shopping Center:	14.3	acres
State Roads:	4.5	acres
Total Imp. Area:	58.77	acres

OUTLET MALL SR 614

Stormwater Basin Volume Requirements:

Volume= 2" runoff/acre of impervious area

58.77 ac* 43560 ft^2/ac =	2,560,021.20	ft^2
2,560,021.20 * 2" / 12"/foot =	426,670.20	ft^3
=	9.80	ac/ft

Estimated volume of existing pond = 29.50 ac/ft

6/3/2005

==========
JOB TITLE
==========

Project Date: 6/6/2005
Project Engineer: Michael L. Claud, P.E.
Project Title: PPEA Site Stormwater BMP
Project Comments:
This is the pond routing for the PPEA site improvements
Stormwater Management BMP

Routing of Western Pond
After proposed improvements

Table of Contents

********** MASTER SUMMARY **********

Watershed..... Master Network Summary 1.01

********** TC CALCULATIONS **********

SUBAREA 10..... Tc Calcs 2.01

********** CN CALCULATIONS **********

SUBAREA 10..... Runoff CN-Area 3.01

********** POND VOLUMES **********

PROP POND..... Vol: Elev-Area 4.01

********** OUTLET STRUCTURES **********

Prop Outlet..... Outlet Input Data 5.01
Composite Rating Curve 5.05

********** POND ROUTING **********

PROP POND OUT 1
Pond Routing Summary 6.01

Table of Contents (continued)

PROP POND OUT 2
Pond Routing Summary 6.02

PROP POND OUT 5
Pond Routing Summary 6.03

PROP POND OUT 10
Pond Routing Summary 6.04

PROP POND OUT 25
Pond Routing Summary 6.05

PROP POND OUT 50
Pond Routing Summary 6.06

PROP POND OUT 100
Pond Routing Summary 6.07

MASTER DESIGN STORM SUMMARY

Network Storm Collection: James City Count

Return Event	Total Depth in	Rainfall Type	RNF ID
1	2.8000	Synthetic Curve	TypeII 24hr
2	3.5000	Synthetic Curve	TypeII 24hr
5	4.5000	Synthetic Curve	TypeII 24hr
10	5.5000	Synthetic Curve	TypeII 24hr
25	6.0000	Synthetic Curve	TypeII 24hr
50	7.0000	Synthetic Curve	TypeII 24hr
100	8.0000	Synthetic Curve	TypeII 24hr

MASTER NETWORK SUMMARY
SCS Unit Hydrograph Method

(*Node=Outfall; +Node=Diversion;)
(Trun= HYG Truncation: Blank=None; L=Left; R=Rt; LR=Left&Rt)

Node ID	Type	Return Event	HYG Vol ac-ft	Trun	Qpeak hrs	Qpeak cfs	Max WSEL ft	Max Pond Storage ac-ft
*OUT 10	JCT	1	.129		24.6500	.66		
*OUT 10	JCT	2	9.647		16.5500	13.06		
*OUT 10	JCT	5	24.091		13.6000	44.98		
*OUT 10	JCT	10	39.157		13.1000	92.55		
*OUT 10	JCT	25	46.847		13.0000	118.34		
*OUT 10	JCT	50	62.448		12.9000	175.88		
*OUT 10	JCT	100	78.269		12.8000	241.51		
PROP POND IN	POND	1	21.447		12.2500	201.52		
PROP POND IN	POND	2	30.965		12.2500	293.20		
PROP POND IN	POND	5	45.409		12.2000	431.55		
PROP POND IN	POND	10	60.475		12.2000	573.63		
PROP POND IN	POND	25	68.165		12.2000	645.27		
PROP POND IN	POND	50	83.766		12.2000	789.05		
PROP POND IN	POND	100	99.587		12.2000	932.99		

Show 24-hour det SCPV

MASTER NETWORK SUMMARY
SCS Unit Hydrograph Method

(*Node=Outfall; +Node=Diversion;)
(Trun= HYG Truncation: Blank=None; L=Left; R=Rt; LR=Left&Rt)

Node ID	Type	Return Event	HYG Vol ac-ft	Trun	Qpeak hrs	Qpeak cfs	Max WSEL ft	Max Pond Storage ac-ft
PROP POND	OUT POND	1	.129		24.6500	.66	61.01	52.881
PROP POND	OUT POND	2	9.647		16.5500	13.06	61.22	54.570
PROP POND	OUT POND	5	24.091		13.6000	44.98	61.75	59.209
PROP POND	OUT POND	10	39.157		13.1000	92.55	62.45	65.893
PROP POND	OUT POND	25	46.847		13.0000	118.34	62.80	69.500
PROP POND	OUT POND	50	62.448		12.9000	175.88	63.46	76.641
PROP POND	OUT POND	100	78.269		12.8000	241.51	64.09 DHW	83.881
SUBAREA 10	AREA	1	21.447		12.2500	201.52		
SUBAREA 10	AREA	2	30.965		12.2500	293.20		
SUBAREA 10	AREA	5	45.409		12.2000	431.55		
SUBAREA 10	AREA	10	60.475		12.2000	573.63		
SUBAREA 10	AREA	25	68.165		12.2000	645.27		
SUBAREA 10	AREA	50	83.766		12.2000	789.05		
SUBAREA 10	AREA	100	99.587		12.2000	932.99		

MIN TOD
64.09
1.00
65.09

File.... R:\000 - Timmons Group\22303\Pond\calc\Pond Pack\PPEA SITE POND MODEL PROPOSED.PPW

TIME OF CONCENTRATION CALCULATOR

Segment #1: Tc: User Defined

Segment #1 Time: .5500 hrs

Total Tc: .5500 hrs

comps?

23 minutes per storm comps

File.... R:\000 - Timmons Group\22303\Pond\calc\Pond Pack\PPEA SITE POND MODEL PROPOSED.PPW

Tc Equations used...

==== User Defined ==========

Tc = Value entered by user

Where: Tc = Time of concentration

File.... R:\000 - Timmons Group\22303\Pond\calc\Pond Pack\PPEA SITE POND MODEL PROPOSED.PPW

RUNOFF CURVE NUMBER DATA

Soil/Surface Description	CN	Area acres	Impervious Adjustment %C	Impervious Adjustment %UC	Adjusted CN
Shopping Center	96	14.300			96.00
Community College	88	52.100			88.00
High School (soccer fields & roads)	88	6.600			88.00
Sports Complex	88	31.800			88.00
State Roads & R/W	92	4.500			92.00
Forested Land	70	41.800			70.00
Existing Pond	100	7.200			100.00
Utility Easement	75	6.400			75.00
Existing Church Site	90	2.500			90.00
Stadium Site	88	12.600			88.00
High School (assumed pre-dev condit	70	16.800			70.00
Existing residential development	77	3.300			77.00
COMPOSITE AREA & WEIGHTED CN --->		199.900			83.25 (83)

Forebay Comp Shows 187.82 AC

File.... R:\000 - Timmons Group\22303\Pond\calc\Pond Pack\PPEA SITE POND MODEL PROPOSED.PPW

Elevation (ft)	Planimeter (sq.in)	Area (acres)	A1+A2+sqr(A1*A2) (acres)	Volume (ac-ft)	Volume Sum (ac-ft)
50.00	-----	1.4715	.0000	.000	.000
55.00	-----	4.0866	8.0103	13.351	13.351
58.00	-----	7.1800	16.6834	16.683	30.034
61.00	-----	8.0000	22.7589	22.759	52.793
62.00	-----	9.5168	26.2423	8.747	61.540
64.00	-----	11.8541	31.9923	21.328	82.868
66.00	-----	14.3800	39.2902	26.193	109.062

MIN T.O.D. 65.09

POND VOLUME EQUATIONS

* Incremental volume computed by the Conic Method for Reservoir Volumes.

Volume = (1/3) * (EL2-EL1) * (Area1 + Area2 + sq.rt.(Area1*Area2))

where: EL1, EL2 = Lower and upper elevations of the increment
Area1,Area2 = Areas computed for EL1, EL2, respectively
Volume = Incremental volume between EL1 and EL2

✓ check plan for pond contours

✓ why EL 61 22.7 AC-FT
EL 64 21.3 AC-FT

File.... R:\000 - Timmons Group\22303\Pond\calc\Pond Pack\PPEA SITE POND MODEL PROPOSED.PPW

REQUESTED POND WS ELEVATIONS:

Min. Elev.= 50.00 ft
Increment = 1.00 ft
Max. Elev.= 66.00 ft

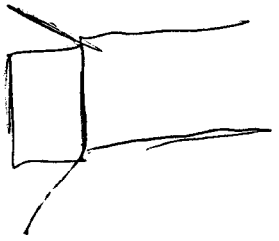

****
OUTLET CONNECTIVITY
****

---> Forward Flow Only (UpStream to DnStream)
<--- Reverse Flow Only (DnStream to UpStream)
<---> Forward and Reverse Both Allowed

Structure	No.		Outfall	E1, ft	E2, ft
Inlet Box	1	--->	2	61.000	66.000
Weir-Rectangular	4	--->	2	58.200	61.000
Culvert-Box	2	--->	TW	57.380	66.000
Weir-XY Points	3	--->	TW	63.000	66.000

TW SETUP, DS Channel

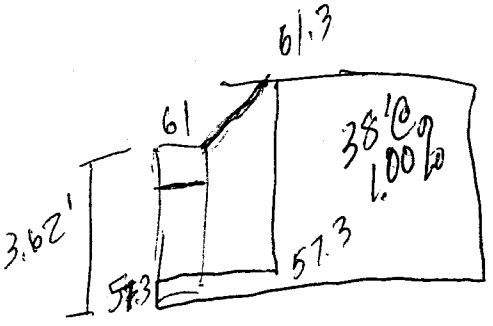

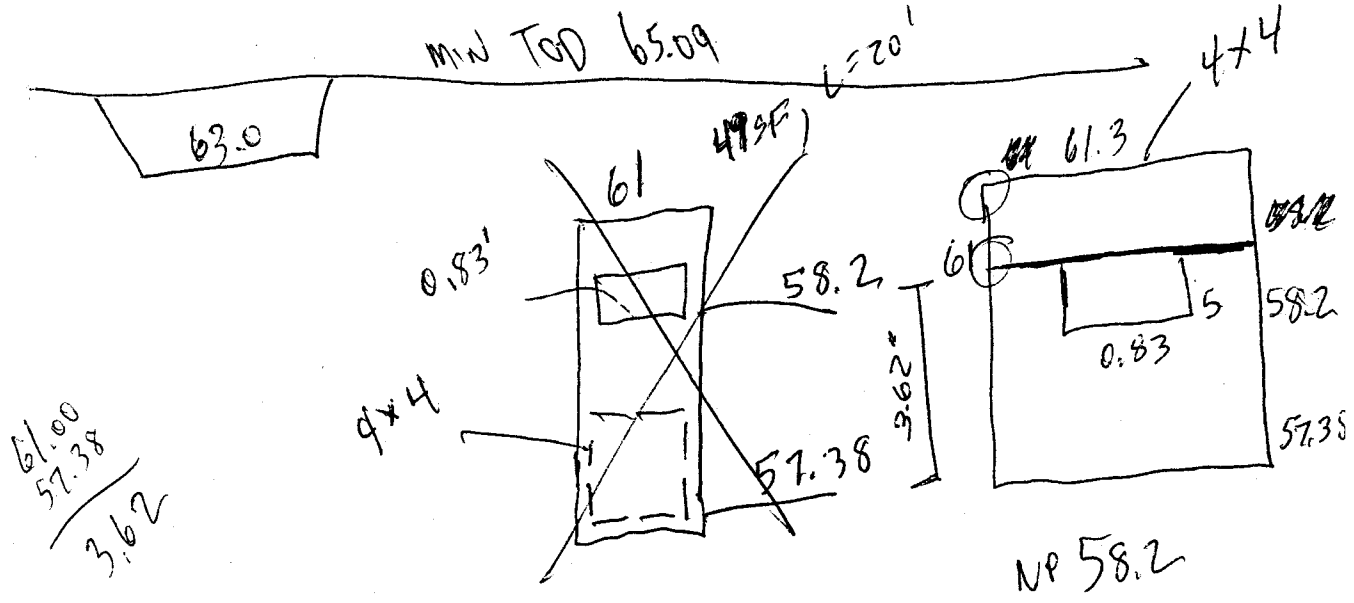

WHY NOT 4x4 BOTTOM FLUSH W/ TOP OF WEIR WALL?

OUTLET STRUCTURE INPUT DATA

```
Structure ID       = 1
Structure Type     = Inlet Box
-----------------------------------
# of Openings      =         1
Invert Elev.       =     61.00 ft
Orifice Area       =   49.0000 sq.ft
Orifice Coeff.     =      .500
Weir Length        =     20.00 ft
Weir Coeff.        =     3.000
K, Submerged       =      .000
K, Reverse         =     1.000
Kb,Barrel          =   .000000  (per ft of full flow)
Barrel Length      =       .00 ft
Mannings n         =     .0000


Structure ID       = 4
Structure Type     = Weir-Rectangular
-----------------------------------
# of Openings      =         1
Crest Elev.        =     58.20 ft
Weir Length        =       .83 ft
Weir Coeff.        =  3.000000

Weir TW effects      (Use adjustment equation)
```

File.... R:\000 - Timmons Group\22303\Pond\calc\Pond Pack\PPEA SITE POND MODEL PROPOSED.PEW

OUTLET STRUCTURE INPUT DATA

CULV-BOX BARREL Bot height is higher than riser

```
Structure ID       = 2
Structure Type     = Culvert-Box
-----------------------------------
No. Barrels        =         1
Barrel Height      =      4.00 ft
Barrel Width       =      4.00 ft
Upstream Invert    =     57.38 ft
Dnstream Invert    =     57.00 ft
Horiz. Length      =     38.00 ft
Barrel Length      =     38.00 ft
Barrel Slope       =    .01000 ft/ft

OUTLET CONTROL DATA...
Mannings n         =     .0130
Ke                 =     .5000  (forward entrance loss)
Kb                 =   .004925  (per ft of full flow)
Kr                 =     .5000  (reverse entrance loss)
HW Convergence     =      .001  +/- ft

INLET CONTROL DATA...
Equation form      =         1
Inlet Control K    =     .0260
Inlet Control M    =    1.0000
Inlet Control c    =    .03470
Inlet Control Y    =     .8100
T1 ratio (HW/D)    =     1.173
T2 ratio (HW/D)    =     1.360
Slope Factor       =     -.500
Calc inlet only    = Yes
```

Use unsubmerged inlet control Form 1 equ. below T1 elev.
Use submerged inlet control Form 1 equ. above T2 elev.

In transition zone between unsubmerged and submerged inlet control,
interpolate between flows at T1 & T2...
At T1 Elev = 62.07 ft ---> Flow = 112.00 cfs
At T2 Elev = 62.82 ft ---> Flow = 128.00 cfs

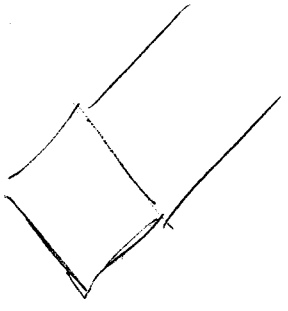

OUTLET STRUCTURE INPUT DATA

Structure ID = 3
Structure Type = Weir-XY Points

# of Openings = 1
WEIR X-Y GROUND POINTS

X, ft	Elev, ft
.00	66.00
18.00	63.00
38.00	63.00
56.00	66.00

Lowest Elev. = 63.00 ft

Weir Coeff. = 2.800000

Weir TW effects (Use adjustment equation)

Structure ID = TW
Structure Type = TW SETUP, DS Channel

FREE OUTFALL CONDITIONS SPECIFIED

CONVERGENCE TOLERANCES...
Maximum Iterations= 30
Min. TW tolerance = .01 ft
Max. TW tolerance = .01 ft
Min. HW tolerance = .01 ft
Max. HW tolerance = .01 ft
Min. Q tolerance = .10 cfs
Max. Q tolerance = .10 cfs

File.... R:\000 - Timmons Group\22303\Pond\calc\Pond Pack\PPEA SITE POND MODEL PROPOSED.PPW

***** COMPOSITE OUTFLOW SUMMARY ****

WS Elev, Total Q		Notes		
		Converge		
Elev. ft	Q cfs	TW Elev ft	Error +/-ft	Contributing Structures
50.00	.00	Free Outfall		(no Q: 1,4,2,3)
51.00	.00	Free Outfall		(no Q: 1,4,2,3)
52.00	.00	Free Outfall		(no Q: 1,4,2,3)
53.00	.00	Free Outfall		(no Q: 1,4,2,3)
54.00	.00	Free Outfall		(no Q: 1,4,2,3)
55.00	.00	Free Outfall		(no Q: 1,4,2,3)
56.00	.00	Free Outfall		(no Q: 1,4,2,3)
57.00	.00	Free Outfall		(no Q: 1,4,2,3)
57.38	.00	Free Outfall		(no Q: 1,4,2,3)
58.00	.00	Free Outfall		(no Q: 1,4,2,3)
58.20	.00	Free Outfall		(no Q: 1,4,2,3)
59.00	1.44	Free Outfall		4,2 (no Q: 1,3)
60.00	3.43	Free Outfall		4,2 (no Q: 1,3)
61.00	.00	Free Outfall		(no Q: 1,4,2,3)
62.00	59.99	Free Outfall		1,2 (no Q: 4,3)
63.00	133.04	Free Outfall		1,2 (no Q: 4,3)
64.00	226.24	Free Outfall		1,2,3 (no Q: 4)
65.00	405.74	Free Outfall		1,2,3 (no Q: 4)
66.00	675.77	Free Outfall		1,2,3 (no Q: 4)

NP 58.2

PROBLEM — SHOULD HAVE FLOW THRU 0.83' WEIR

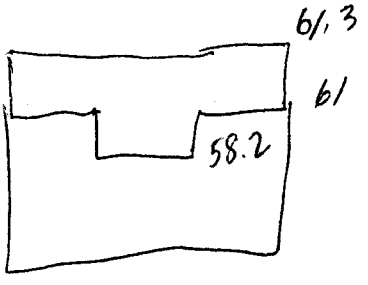

LEVEL POOL ROUTING SUMMARY

```
HYG Dir          = R:\000 - Timmons Group\22303\Pond\calc\Pond Pack\
Inflow  HYG file = NONE STORED - PROP POND    IN  1
Outflow HYG file = NONE STORED - PROP POND    OUT 1

Pond Node   Data = PROP POND
Pond Volume Data = PROP POND
Pond Outlet Data = Prop Outlet

No Infiltration

INITIAL CONDITIONS
----------------------------------
Starting WS Elev   =    58.20 ft
Starting Volume    =   31.475 ac-ft
Starting Outflow   =      .00 cfs
Starting Infiltr.  =      .00 cfs
Starting Total Qout=      .00 cfs
Time Increment     =    .0500 hrs


INFLOW/OUTFLOW HYDROGRAPH SUMMARY
====================================================
Peak Inflow       =    201.52 cfs    at   12.2500 hrs
Peak Outflow      =       .66 cfs    at   24.6500 hrs
----------------------------------------------------
Peak Elevation    =     61.01 ft
Peak Storage =          52.881 ac-ft
====================================================


MASS BALANCE (ac-ft)
--------------------------
+ Initial Vol  =      31.475
+ HYG Vol IN   =      21.447
- Infiltration =        .000
- HYG Vol OUT  =        .129
- Retained Vol =      52.793
                  ----------
Unrouted Vol =       -.000 ac-ft  (.002% of Inflow Volume)
```

Volume 1-YEAR
STORM
21.447 AC-FT

LEVEL POOL ROUTING SUMMARY

```
HYG Dir          = R:\000 - Timmons Group\22303\Pond\calc\Pond Pack\
Inflow  HYG file = NONE STORED - PROP POND    IN  2
Outflow HYG file = NONE STORED - PROP POND    OUT 2

Pond Node   Data = PROP POND
Pond Volume Data = PROP POND
Pond Outlet Data = Prop Outlet

No Infiltration

INITIAL CONDITIONS
----------------------------------
Starting WS Elev   =    58.20 ft
Starting Volume    =   31.475 ac-ft
Starting Outflow   =      .00 cfs
Starting Infiltr.  =      .00 cfs
Starting Total Qout=      .00 cfs
Time Increment     =    .0500 hrs


INFLOW/OUTFLOW HYDROGRAPH SUMMARY
====================================================
Peak Inflow       =    293.20 cfs    at   12.2500 hrs
Peak Outflow      =     13.06 cfs    at   16.5500 hrs
----------------------------------------------------
Peak Elevation    =     61.22 ft
Peak Storage =         54.570 ac-ft
====================================================


MASS BALANCE (ac-ft)
--------------------------
+ Initial Vol  =      31.475
+ HYG Vol IN   =      30.965
- Infiltration =        .000
- HYG Vol OUT  =       9.647
- Retained Vol =      52.793
                  ----------
Unrouted Vol =       -.000 ac-ft  (.001% of Inflow Volume)
```

LEVEL POOL ROUTING SUMMARY

```
HYG Dir          = R:\000 - Timmons Group\22303\Pond\calc\Pond Pack\
Inflow  HYG file = NONE STORED - PROP POND    IN  5
Outflow HYG file = NONE STORED - PROP POND    OUT 5

Pond Node   Data = PROP POND
Pond Volume Data = PROP POND
Pond Outlet Data = Prop Outlet

No Infiltration

INITIAL CONDITIONS
----------------------------------
Starting WS Elev   =    58.20 ft
Starting Volume    =   31.475 ac-ft
Starting Outflow   =      .00 cfs
Starting Infiltr.  =      .00 cfs
Starting Total Qout=      .00 cfs
Time Increment     =    .0500 hrs


INFLOW/OUTFLOW HYDROGRAPH SUMMARY
=====================================================
Peak Inflow        =    431.55 cfs    at   12.2000 hrs
Peak Outflow       =     44.98 cfs    at   13.6000 hrs
-----------------------------------------------------
Peak Elevation     =     61.75 ft
Peak Storage =          59.209 ac-ft
=====================================================


MASS BALANCE (ac-ft)
--------------------------
+ Initial Vol  =      31.475
+ HYG Vol IN   =      45.409
- Infiltration =        .000
- HYG Vol OUT  =      24.091
- Retained Vol =      52.793
                  ----------
Unrouted Vol =       -.000 ac-ft  (.001% of Inflow Volume)
```

LEVEL POOL ROUTING SUMMARY

```
HYG Dir          = R:\000 - Timmons Group\22303\Pond\calc\Pond Pack\
Inflow  HYG file = NONE STORED - PROP POND    IN  10
Outflow HYG file = NONE STORED - PROP POND    OUT 10

Pond Node   Data = PROP POND
Pond Volume Data = PROP POND
Pond Outlet Data = Prop Outlet

No Infiltration

INITIAL CONDITIONS
----------------------------------
Starting WS Elev   =    58.20 ft
Starting Volume    =   31.475 ac-ft
Starting Outflow   =      .00 cfs
Starting Infiltr.  =      .00 cfs
Starting Total Qout=      .00 cfs
Time Increment     =    .0500 hrs


INFLOW/OUTFLOW HYDROGRAPH SUMMARY
=====================================================
Peak Inflow       =    573.63 cfs    at   12.2000 hrs
Peak Outflow      =     92.55 cfs    at   13.1000 hrs
-----------------------------------------------------
Peak Elevation    =     62.45 ft
Peak Storage =         65.893 ac-ft
=====================================================


MASS BALANCE (ac-ft)
--------------------------
+ Initial Vol  =      31.475
+ HYG Vol IN   =      60.475
- Infiltration =        .000
- HYG Vol OUT  =      39.157
- Retained Vol =      52.793
                 ----------
Unrouted Vol =       -.000 ac-ft  (.001% of Inflow Volume)
```

LEVEL POOL ROUTING SUMMARY

```
HYG Dir          = R:\000 - Timmons Group\22303\Pond\calc\Pond Pack\
Inflow  HYG file = NONE STORED - PROP POND    IN  25
Outflow HYG file = NONE STORED - PROP POND    OUT 25

Pond Node   Data = PROP POND
Pond Volume Data = PROP POND
Pond Outlet Data = Prop Outlet

No Infiltration

INITIAL CONDITIONS
----------------------------------
Starting WS Elev   =    58.20 ft
Starting Volume    =   31.475 ac-ft
Starting Outflow   =      .00 cfs
Starting Infiltr.  =      .00 cfs
Starting Total Qout=      .00 cfs
Time Increment     =    .0500 hrs


INFLOW/OUTFLOW HYDROGRAPH SUMMARY
=====================================================
Peak Inflow        =    645.27 cfs    at   12.2000 hrs
Peak Outflow       =    118.34 cfs    at   13.0000 hrs
-----------------------------------------------------
Peak Elevation     =     62.80 ft
Peak Storage =          69.500 ac-ft
=====================================================


MASS BALANCE (ac-ft)
--------------------------
+ Initial Vol  =      31.475
+ HYG Vol IN   =      68.165
- Infiltration =        .000
- HYG Vol OUT  =      46.847
- Retained Vol =      52.793
                 ----------
Unrouted Vol =       -.000 ac-ft  (.001% of Inflow Volume)
```

LEVEL POOL ROUTING SUMMARY

```
HYG Dir          = R:\000 - Timmons Group\22303\Pond\calc\Pond Pack\
Inflow  HYG file = NONE STORED - PROP POND    IN  50
Outflow HYG file = NONE STORED - PROP POND    OUT 50

Pond Node   Data = PROP POND
Pond Volume Data = PROP POND
Pond Outlet Data = Prop Outlet

No Infiltration

INITIAL CONDITIONS
----------------------------------
Starting WS Elev   =    58.20 ft
Starting Volume    =   31.475 ac-ft
Starting Outflow   =      .00 cfs
Starting Infiltr.  =      .00 cfs
Starting Total Qout=      .00 cfs
Time Increment     =    .0500 hrs


INFLOW/OUTFLOW HYDROGRAPH SUMMARY
=====================================================
Peak Inflow       =    789.05 cfs    at   12.2000 hrs
Peak Outflow      =    175.88 cfs    at   12.9000 hrs
-----------------------------------------------------
Peak Elevation    =     63.46 ft
Peak Storage =         76.641 ac-ft
=====================================================


MASS BALANCE (ac-ft)
--------------------------
+ Initial Vol  =      31.475
+ HYG Vol IN   =      83.766
- Infiltration =        .000
- HYG Vol OUT  =      62.448
- Retained Vol =      52.793
                 ----------
Unrouted Vol =       -.000 ac-ft  (.001% of Inflow Volume)
```

LEVEL POOL ROUTING SUMMARY

```
HYG Dir          = R:\000 - Timmons Group\22303\Pond\calc\Pond Pack\
Inflow  HYG file = NONE STORED - PROP POND    IN  100
Outflow HYG file = NONE STORED - PROP POND    OUT 100

Pond Node   Data = PROP POND
Pond Volume Data = PROP POND
Pond Outlet Data = Prop Outlet

No Infiltration

INITIAL CONDITIONS
---------------------------------
Starting WS Elev   =    58.20 ft
Starting Volume    =   31.475 ac-ft
Starting Outflow   =      .00 cfs
Starting Infiltr.  =      .00 cfs
Starting Total Qout=      .00 cfs
Time Increment     =    .0500 hrs


INFLOW/OUTFLOW HYDROGRAPH SUMMARY
=====================================================
Peak Inflow       =    932.99 cfs    at   12.2000 hrs
Peak Outflow      =    241.51 cfs    at   12.8000 hrs
-----------------------------------------------------
Peak Elevation    =     64.09 ft
Peak Storage =         83.881 ac-ft
=====================================================


MASS BALANCE (ac-ft)
--------------------------
+ Initial Vol  =      31.475
+ HYG Vol IN   =      99.587
- Infiltration =        .000
- HYG Vol OUT  =      78.269
- Retained Vol =      52.793
                   ----------
Unrouted Vol =       -.000 ac-ft  (.000% of Inflow Volume)
```

D.H.W

Scott Thomas

From: Scott Thomas

Sent: Thursday, May 26, 2005 10:32 AM

To: 'Andrew Gould'; 'bob.roop@timmons.com'; Darryl Cook

Cc: Steven W. Hicks; 'Bill Richards'; Wayland Bass

Subject: Warhill PPEA- District Park West Dam Improvement (PC 105)

In follow-up to our discussions at standing team meeting last Monday, I am providing more information on permits required for proposed improvements associated with the District Park West Pond, project Phase 3B (County BMP ID Code: PC 105). At the meeting, you distributed an application package that went to the USACOE for improvements proposed to the west pond. As this was the first our Division saw any sketches of improvements to the pond, it was immediately realized that there would be impacts to RPA Buffer due to this work plan.

I brought this information back to our office for review and determination. Our director has made a determination that this exception will be administrative rather than a Chesapeake Bay Board review item. Therefore, our Division must receive a Chesapeake Bay Exception request in writing. A minor WQIA will be necessary along with a letter request to Darryl Cook, Director of the Environmental Division. Our WQIA requirements were previously provided to Timmons and the section related to Minor WQIA's can be used as guidance. Primary focus in the WQIA should be quantification of impacts in the RPA and/or RPA buffer and complete description of improvements and how improvement to the dam will benefit water quality. Also, provide a small sketch similar to the one developed for the USACOE application for the WQIA. I've attached a basic fact sheet of information compiled for the west pond.

The same will also be true for the District Park East Pond (PC 106), once we are far enough along with knowing what improvements may be necessary on an interim or permanent basis.

(Note: Although I am primary contact for the Warhill PPEA project, Darryl is Chesapeake Bay administrator and reviews and approval all RPA waiver/exception requests. His phone number is 253-6670 and email is decook@james-city.va.us)

Scott J. Thomas, P.E.
James City County
Environmental Division

Warhill Site & Roadway Improvements
Chesapeake Bay Exception

District Park West Pond
Phase 3B
County BMP ID Code: PC 105

Knowns:

- Part of County PPEA project

- Required improvements to District Park West Pond dam in order to accept drainage from the proposed Warhill PPEA trunk storm line. The trunk storm line will convey drainage from the outlet mall, Centerville Road, the TNCC site, a portion of the stadium and from the main access, secondary and stadium access road.

- Impacts due to: abandon existing riser/barrel structure; tree removal on dam embankment; dam and emergency spillway regrading (slope grading only – no fill); top of dam improvements; installation of a principle flow control structure (weir box, pipe and concrete flume); and plunge-pool energy dissipater.

- Wetland Impacts: 526.33 square feet (0.01 acres) of forested wetland impacts.

- Jurisdiction Determination: COE Project No. 05-R0844, March 28th 2005.

- Pending Corps. Permits: Authorization under NWP # 3. Request submitted 5/20/05.

- Improvements are consistent with recommendations from the approved Powhatan Creek Watershed Management Plan for Warhill R205-4, ranked # 3 or # 4 of 9, (Subwatershed 205). Potential regional pond to manage runoff from future development as well as from existing development.

- This will be a administrative Chesapeake Bay Exception review.

discharges, that is reviewed and found by the board to achieve water quality protection equivalent to that required by this subsection; and

(3) Compliance with a site-specific VPDES permit issued by the Department of Environmental Quality, provided that the local government specifically determines that the permit requires measures that collectively achieve water quality protection equivalent to that required by this subsection.

b. Any maintenance, alteration, use or improvement to an existing structure that does not degrade the quality of surface water discharge, as determined by the local government, may be exempted from the requirements of this subsection.

c. Stormwater management criteria for redevelopment shall apply to any redevelopment, whether or not it is located within an Intensely Developed Area designated by a local government.

9. Land upon which agricultural activities are being conducted, including but not limited to crop production, pasture, and dairy and feedlot operations, or lands otherwise defined as agricultural land by the local government, shall have a soil and water quality conservation assessment conducted that evaluates the effectiveness of existing practices pertaining to soil erosion and sediment control, nutrient management, and management of pesticides and, where necessary, results in a plan that outlines additional practices needed to ensure that water quality protection is being accomplished consistent with the Act and this chapter.

a. Recommendations for additional conservation practices need address only those conservation issues applicable to the tract or field being assessed. Any soil and water quality conservation practices that are recommended as a result of such an assessment and are subsequently implemented with financial assistance from federal or state cost-share programs must be designed, consistent with cost-share practice standards effective in January 1999 in the "Field Office Technical Guide" of the U.S. Department of Agriculture Natural Resource Conservation Service or the January 2001 edition of the "Virginia Agricultural BMP Manual" of the Virginia Department of Conservation and Recreation, respectively. Unless otherwise specified in this section, general standards pertaining to the various agricultural conservation practices being assessed shall be as follows:

(1) For erosion and sediment control recommendations, the goal shall be, where feasible, to prevent erosion from exceeding the soil loss tolerance level, referred to as "T," as defined in the "National Soil Survey Handbook" of November 1996 in the "Field Office Technical Guide" of the U.S. Department of Agriculture Natural Resource Conservation Service. However, in no case shall erosion exceed the soil loss consistent with an Alternative Conservation System, referred to as an "ACS", as defined in the "Field Office Technical Guide" of the U.S. Department of Agriculture Natural Resource Conservation Service.

(2) For nutrient management, whenever nutrient management plans are developed, the operator or landowner must provide soil test information, consistent with the Virginia Nutrient Management Training and Certification Regulations (4 VAC 5-15-10 et seq.).

(3) For pest chemical control, referrals shall be made to the local cooperative extension agent or an Integrated Pest Management Specialist of the Virginia Cooperative Extension Service. Recommendations shall include copies of applicable information from the "Virginia Pest Management Guide" or other Extension materials related to pest control.

b. A higher priority shall be placed on conducting assessments of agricultural fields and tracts adjacent to Resource Protection Areas. However, if the landowner or operator of such a tract also has Resource Management Area fields or tracts in his operation, the assessment for that landowner or operator may be conducted for all fields or tracts in the operation. When such an expanded assessment is completed, priority must return to Resource Protection Area fields and tracts.

c. The findings and recommendations of such assessments and any resulting soil and water quality conservation plans will be submitted to the local Soil and Water Conservation District Board, which will be the plan-approving authority.

10. Silvicultural activities in Chesapeake Bay Preservation Areas are exempt from this chapter provided that silvicultural operations adhere to water quality protection procedures prescribed by the Virginia Department of Forestry in the January 1997 edition of "Forestry Best Management Practices for Water Quality in Virginia Technical Guide." The Virginia Department of Forestry will oversee and document

Warhill Site & Roadway Improvements
Chesapeake Bay Exception

District Park West Pond
Phase 3B
County BMP ID Code: PC 105

Knowns:

- Part of County PPEA project

- Required improvements to District Park West Pond dam in order to accept drainage from the proposed Warhill PPEA trunk storm line. The trunk storm line will convey drainage from the outlet mall, Centerville Road, the TNCC site, a portion of the stadium and from the main access, secondary and stadium access road.

- Impacts due to: abandon existing riser/barrel structure; tree removal on dam embankment; dam and emergency spillway regrading (slope grading only – no fill); top of dam improvements; installation of a principle flow control structure (weir box, pipe and concrete flume); and plunge-pool energy dissipater.

- Wetland Impacts: 526.33 square feet (0.01 acres) of forested wetland impacts.

- Jurisdiction Determination: COE Project No. 05-R0844, March 28th 2005.

- Pending Corps. Permits: Authorization under NWP # 3. Request submitted 5/20/05.

- Improvements are consistent with recommendations from the approved Powhatan Creek Watershed Management Plan for Warhill R205-4, ranked # 3 or # 4 of 9, (Subwatershed 205). Potential regional pond to manage runoff from future development as well as from existing development.

Questions:

- Administrative or Ches Bay Board review? Due to encroachment into seaward 50 ft. it would appear it would be a Board review item.

- Earliest Board agenda date? Process?

  - June 1st for July 13 meeting
  - June 29th for the August 10 meeting.

- We need to give Timmons guidance on whether a WQIA is needed and if so what are the requirements?

- Who handles presentation of the case to the Bay Board as it will be a County project?

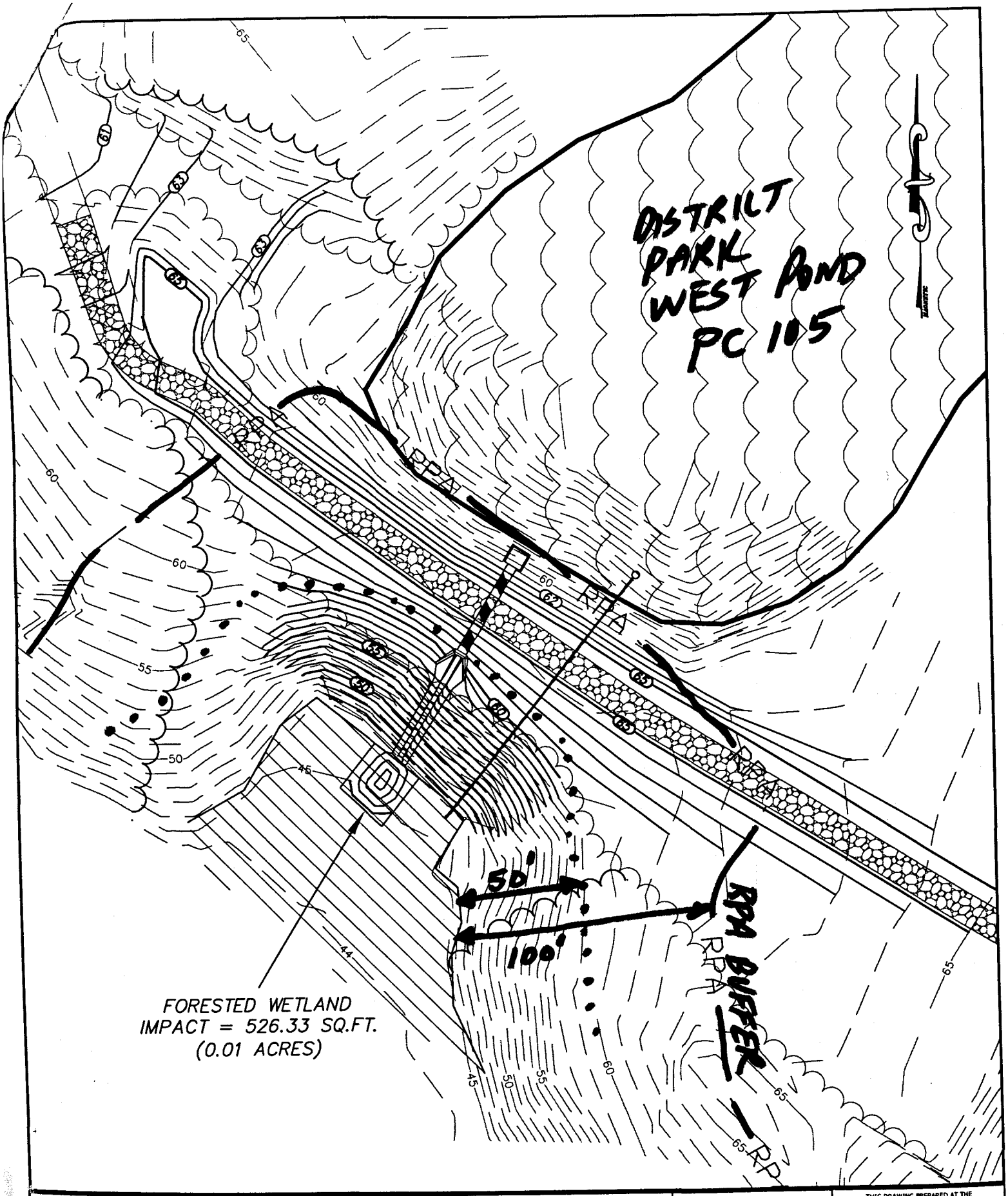

TIMMONS GROUP

YOUR VISION ACHIEVED THROUGH OURS.

THIS DRAWING PREPARED AT THE CORPORATE OFFICE
1001 Boulders Parkway, Suite 300 | Richmond, VA 23225
TEL 804.200.6500 FAX 804.560.1016 www.timmons.com

Site Development | Residential | Infrastructure | Technology

JOB NO.		SCALE	DATE	DATE	REVISION DESCRIPTION
22303	JAMES CITY COUNTY PPEA	1" = 50'	5/18/05		
SHEET NO. 1	JAMES CITY COUNTY, VIRGINIA	CHECKED BY	DRAWN BY D.A.	DESIGNED BY	
	IMPACT DETAIL				

These plans and associated documents are the exclusive property of TIMMONS GROUP and may not be reproduced in whole or in part and shall not be used for any purpose whatsoever, inclusive, but not limited to construction, bidding, and/or construction staking without the express written consent of TIMMONS GROUP.

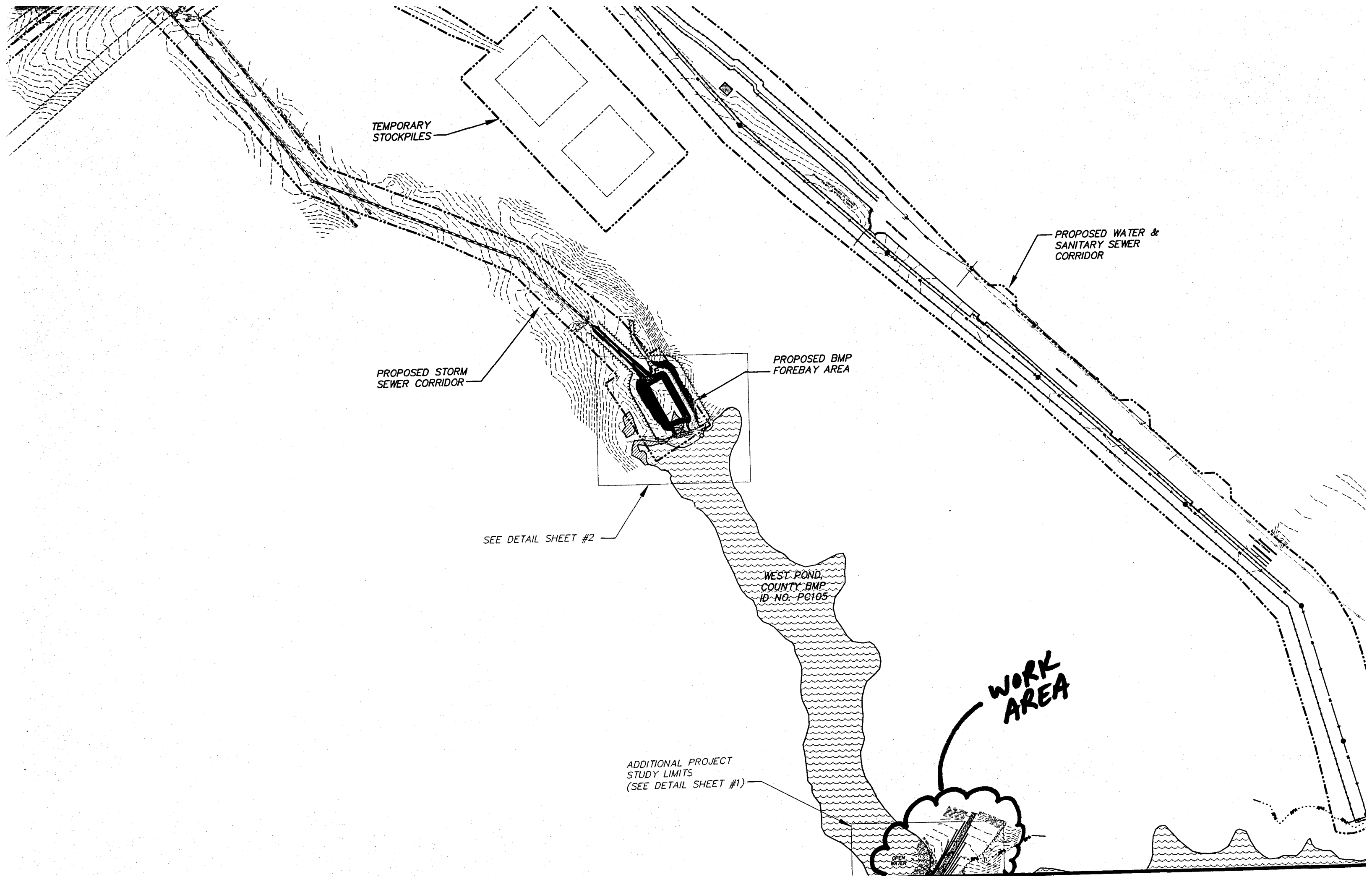
TEMPORARY STOCKPILES
PROPOSED WATER & SANITARY SEWER CORRIDOR
PROPOSED STORM SEWER CORRIDOR
PROPOSED BMP FOREBAY AREA
SEE DETAIL SHEET #2
WEST POND, COUNTY BMP ID NO. PC105
WORK AREA
ADDITIONAL PROJECT STUDY LIMITS (SEE DETAIL SHEET #1)
OPEN WATER

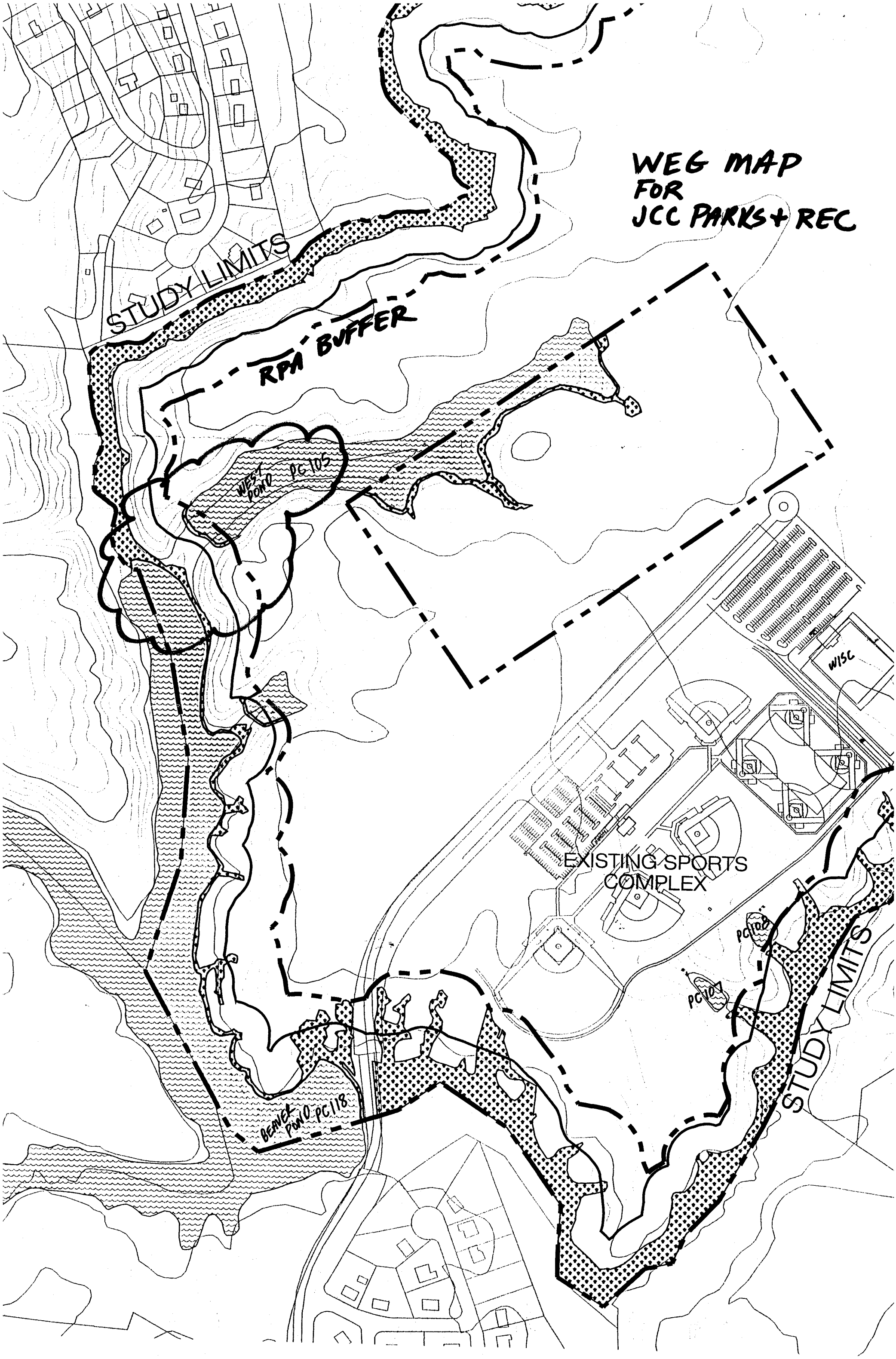
WEG MAP
FOR
JCC PARKS + REC
STUDY LIMITS
RPA BUFFER
WEST POND PC 105
WISC
EXISTING SPORTS
COMPLEX
PC108
PC107
STUDY LIMITS
BEAVER POND PC118

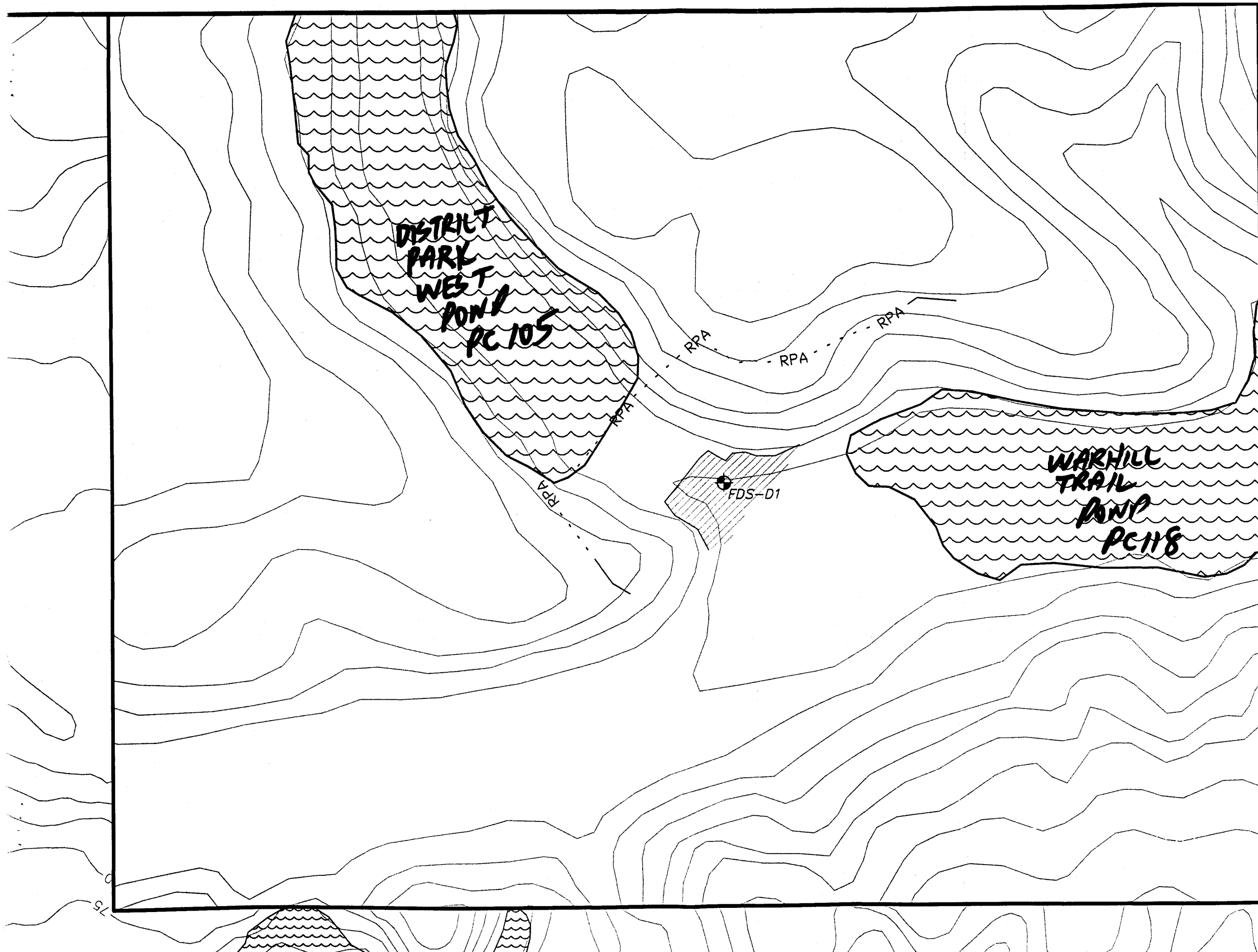

THIS DRAWING PREPARED AT THE
CORPORATE OFFICE

1001 Boulders Parkway, Suite 300 | Richmond, VA 23225
TEL 804.200.6500 FAX 804.560.1016 www.timmons.com

HIEVED THROUGH OURS.

pment | Residential | Infrastructure | Technology

	REVISION DESCRIPTION
05	*REVISED PER DESIGN CHANGE*

TOTAL	$ 400,000.00

B. **Dam Improvements and Vehicular Access** - Design and construct the necessary improvements to the existing dam (upper western pond) to facilitate vehicular access across the facility. This work will consist of reinforcing the upstream and the downstream sides of the existing dam, installation of a box culvert for overflow, and the construction of a gravel roadway for emergency vehicular travel across the dam. A new rip-rap plunge pool will be provided. The existing spillway culvert will be abandoned.

Design	$ 16,340.00
QC/QA	$ 4,780.00
Construction	$ 99,596.00
TOTAL	$ 120,716.00

C. **Domestic Water System** - Design and construct the necessary valves and piping to stub out for connections to the proposed developable site (8.77 acres) and for the future elevated water storage tank.

Design	$ 0.00
QC/QA	$ 0.00
Construction	$ 21,946.00
TOTAL	$ 21,946.00

D. **Sanitary Sewer** - Provide for stub out connections to the proposed developable site (8.77 acres) and provide for manhole stubs at eight (8) other locations as identified by Owner. Provide additional mainline depth (+ or – 2') for sewer main length (approximately 3,000 linear feet) located north of utility corridor in order to increase service reach of sewer main.

Design	$ 0.00

TRANSMITTAL SHEET

ENVIRONMENTAL → STORMWATER

Project: WARHILL PPEA
WESTPOND DAM PC105, FOREBAY + TRUNK LINE

County Plan No. SP-82-05 + SP-143-05

Assigned BMP No.: PC105

BMP Type: WET POND (UPGRADED FOR PPEA)

Information Enclosed:

RECEIVED ON
SEP 14 '09
Stormwater Division

- ☑ Record Drawings (Asbuilts)
- ☑ Construction Certification
- ☑ Computations
- ☑ Other :

SP-82-05 WESTPOND DAM + FOREBAY
SP-143-05 STORM TRUNK LINE

Name: Scott J. Thomas

Date: 09/11/09

Signature: Scott Thomas

James City County, Virginia
Environmental Division

Warhill Site Roadways & Improvements
Environmental Division Comments

Record Drawings (As-builts)
West Pond Dam/Storm Trunk/Forebay
SP-82-05/SP-143-05

PC 105 : FOREBAY (SP-82-05)
AND 54"/72" TRUNK LINE (SP-143-05)

JCC/WARHILL SITE ROADWAYS & IMPROVEMENTS

WARHILL PPEA

WEST POND DAM SP-82-05

West Pond Dam

James City County, Virginia
Environmental Division

Stormwater Management / BMP Facilities
Record Drawing and Construction Certification Forms

(Note: In accordance with the requirements of the Chesapeake Bay Preservation Ordinance, Chapter 23, Section 23-10(4), BMP's shall be designed and constructed in accordance with the manual entitled James City County Guidelines for Design and Construction of Stormwater Management BMP's. Erosion and sediment control policy and approved plans generally require that at the completion of the project and prior to release of surety, an "as-built" plan prepared by a registered Professional Engineer or Certified Land Surveyor must be provided for the drainage system for the project, including any Best Management Practice (BMP) facilities. In addition, for BMP facilities involving the construction of an impounding structure or dam embankment, certification is required by a Professional Engineer who has inspected the structure during its construction. Currently there are over 20 water quality type BMP's accepted by the County.)

Section 1 - Site Information:

Project Name: Warhill Site Roadways & Improvements - Stormwater As-builts
Structure/BMP Name: Western Pond Dam (PC-105)
Project Location: Near Rt. 199 & Rt. 60
BMP Location: JCC District Park Sports Complex
County Plan No.: SP - 57 - 05 TRUNK
82 05 DAM

Project Type: ☐ Residential ☐ Business ☐ Commercial ☐ Office ☐ Institutional ☐ Industrial ☒ Public ☐ Roadway ☐ Other _____

Tax Map/Parcel No.: _____
BMP ID Code (if known): PC-105
Zoning District:: _____
Land Use: _____
Site Area (sf or acres): 588 Acres

Brief Description of Stormwater Management/BMP Facility: wet pond w/ upstream forebay

Nearest Visible Landmark to SWM/BMP Facility: JCC District Park Sports Complex

Nearest Vertical Ground Control (if known):
☐ JCC Geodetic Ground Control ☐ USGS ☐ Temporary ☐ Arbitrary ☐ Other
Station Number or Name: See Plan Sheets
Datum or Reference Elevation: _____
Control Description: _____
Control Location from Subject Facility: _____

Section 2 - Stormwater Management / BMP Facility Construction Information:

PreConstruction Meeting Held for Construction of SWM/BMP Facility: ☒ Yes ☐ No ☐ Unknown
Approx. Construction Start Date for SWM/BMP Facility: July 05
Facility Monitored by County Representative during Construction: ☒ Yes ☐ No ☐ Unknown
Name of Site Work Contractor Who Constructed Facility: Curtis Contracting / George Nice & Sons
Name of Professional Firm Who Routinely Monitored Construction: Timmons Group
Date of Completion for SWM/BMP Facility: January 06
Date of Record Drawing/Construction Certification Submittal: 4/10/06

(Note: Record Drawing and Construction Certifications are required within thirty (30) days of the completion of Stormwater Management and/or BMP facility construction. Record Drawings and Construction Certifications must be reviewed and approved by the James City County Environmental Division prior to final inspection, acceptance and bond or surety release.)

Section 3 - Owner / Designer / Contractor Information:

Owner/Developer: *(Note: Site Owner or Applicant responsible for development of the project.)*

Name: Curtis Contracting for James City County
Mailing Address: PO Box 769
West Point, VA 23181
Business Phone: 804-843-4633 Fax: 804-842-2545
Contact Person: Andy Curtis Title: Project Manager

Design Professional: *(Note: Professional Engineer or Certified Land Surveyor responsible for the design and preparation of plans and specifications for the Stormwater Management / BMP facility.)*

Firm Name: Timmons Group
Mailing Address: 1001 Boulders Parkway, Suite 300
Richmond, VA 23225
Business Phone: 804-200-6412
Fax: 804-560-1438
Responsible Plan Preparer: Andrew Gould
Title: Stormwater Services Manager
Plan Name: Warhill Site Roadways & Improvements / West Pond Dam Improvements
Firm's Project No. 22303
Plan Date: 7/11/05
Sheet No.'s Applicable to SWM/BMP Facility: C3.01 C3.11 C5.01 — 1 C9.2

BMP Contractor: *(Note: Site Work Contractor directly responsible for construction of the Stormwater Management / BMP facility.)*

Name: George Nice & Sons
Mailing Address: 743 Skimino Road
Williamsburg, VA 23188
Business Phone: 757-565-2885
Fax: 757-565-1526
Contact Person: Ray Nice
Site Foreman/Supervisor:
Specialty Subcontractors & Purpose (for BMP Construction Only): N/A

Section 4 - Professional Certifications:

Certifying Professionals: *(Note: A Registered Professional Engineer or Certified Land Surveyor is responsible for preparation of a Record Drawing, sometimes referred to as an As-Built plan, for the drainage system for the project including any Stormwater Management/BMP Facilities. A Registered Professional Engineer is responsible for the inspection, monitoring and certification of Stormwater Management / BMP facilities during its construction.)*

Record Drawing and Construction Certifications for Stormwater Management / BMP Facilities

Record Drawing Certification

Firm Name: Andrew Gould / Timmons Group
Mailing Address: 1001 Boulders Parkway
Richmond, VA 23225
Business Phone: 804-200-6412
Fax: 804-560-1438

Name: Andrew Gould
Title: Stormwater Services Manager

Signature: [signature]
Date: 4-10-06

I hereby certify to the best of my knowledge and belief that this record drawing represents the actual condition of the Stormwater Management / BMP facility. The facility appears to conform with the provisions of the approved design plan, specifications and stormwater management plan, except as specifically noted.

COMMONWEALTH OF VIRGINIA
ANDREW P. GOULD
NO. 030591
PROFESSIONAL ENGINEER

_____ (Seal)

Virginia Registered Professional Engineer or Certified Land Surveyor

Construction Certification

Firm Name: Timmons Group
Mailing Address: 1001 Boulders Parkway
Richmond, VA 23225
Business Phone: 804-200-6412
Fax: 804-560-1438

Name: Andrew Gould
Title: Stormwater Services Manager

Signature: [signature]
Date: 4-10-06

I hereby certify to the best of my knowledge and belief that this Stormwater Management/BMP facility was monitored and constructed in accordance with the provisions of the approved design plan, specifications and stormwater management plan, except as specifically noted.

COMMONWEALTH OF VIRGINIA
ANDREW P. GOULD
NO. 030591
PROFESSIONAL ENGINEER

_____ (Seal)

Virginia Registered Professional Engineer

RESOLUTION

DEDICATION OF OPPORTUNITY WAY INTO THE STATE SECONDARY HIGHWAY SYSTEM

WHEREAS, the Williamsburg Residency Office of the Virginia Department of Transportation recommends that the street(s) referenced in this Board's resolution be added to the secondary system of State highways as a no-cost rural addition pursuant to Section 33.1-229 and Commonwealth Transportation Board policy, because the street(s) meets current minimum standards, the condition of the existing hard surface is serviceable, the street(s) has provided continuous public service since its establishment in March 31, 2008, and currently serves a public school and public recreational facilities; and

WHEREAS, the Williamsburg Residency Office of the Virginia Department of Transportation confirms that no Department funds are required to improve the street(s) described on the attached additions form AM-4.3 to meet current minimum design or maintenance standards of the Department.

NOW, THEREFORE, BE IT RESOLVED by the Board of Supervisors of James City County, Virginia, that this Board requests the Virginia Department of Transportation to add the street(s) described on the attached additions form AM-4.3 to the secondary system of State highways, pursuant to Section 33.1-229, Code of Virginia and the Rural Addition Policy of the Commonwealth Transportation Board of the Virginia Department of Transportation.

BE IT FURTHER RESOLVED, this Board guarantees a clear and unrestricted right-of-way, as described on the attached form AM-4.3, and any necessary easements for cuts, fills and drainage.

BE IT FURTHER RESOLVED, that a certified copy of this resolution be forwarded to the Residency Administrator of the Virginia Department of Transportation.

James G. Kennedy
Chairman, Board of Supervisors

SUPERVISOR	VOTE
GOODSON	ABSENT
JONES	AYE
MCGLENNON	AYE
ICENHOUR	AYE
KENNEDY	AYE

ATTEST:

Sanford B. Wanner
Clerk to the Board

Adopted by the Board of Supervisors of James City County, Virginia, this 8th day of September, 2009.

I hereby certify that the foregoing document is a true and correct copy of the original document.

Michelle Salnoske
Communications Assistant

In the County of James City

By resolution of the governing body adopted September 08, 2009

The following VDOT Form AM-4.3 is hereby attached and incorporated as part of the governing body's resolution
for changes in the secondary system of state highways.

A Copy Testee *Signed (County Official):*

Report of Changes in the Secondary System of State Highways

Project/Subdivision **Opportunity Way**

Type Change to the Secondary System of State Highways: **Addition**

The following additions to the Secondary System of State Highways, pursuant to the statutory provision or provisions cited, are hereby requested; the right of way for which, including additional easements for cuts, fills and
drainage, as required, is hereby guaranteed:

Reason for Change: **Rural Addition (CTB Policy - No Cost)**
Pursuant to Code of Virginia Statute: **§33.1-229**

Street Name and/or Route Number

- **Opportunity Way, State Route Number 1035**
  Old Route Number: 0
  - From: Centerville Road (RTE. 614)
    To: .16 Mi. SW of Route 614, a distance of: 0.16 miles.

    Recordation Reference: Document # 060002226
    Right of Way width (feet) = 120 feet
- **Opportunity Way, State Route Number 1035**
  Old Route Number: 0
  - From: .16 Mi. SW of Route 614
    To: T Turn Around, a distance of: 0.30 miles.

    Recordation Reference: Document # 060002226
    Right of Way width (feet) = 120 feet

TIMMONS GROUP

YOUR VISION ACHIEVED THROUGH OURS.

2nd SP-82-05

April 11, 2007

RECEIVED
APR 12
ENVIRONMENTAL DIVISION

Mr. Scott Thomas P.E.
James City County
Environmental Division
101 Mounts Bay Road
Williamsburg, Virginia 23187-8784

RE: Warhill Site Roadways & Improvements
West Pond Dam – As-built Drawing Review
County Plan #SP-82-05 (PC 105)

Dear Scott:

We are submitting a set of revised as-built plans for the above referenced project. In regards to your review comment letter dated May 5, 2006 for the above referenced project, we offer the following responses:

Record Drawings

1. ✓ Reference the approved site plan number (SP-82-05) on the cover sheet.

   - The site plan number has been referenced on the cover sheet.

2. ✓ Provide an as-built elevation for the new normal pool elevation of the lake. *(Note: It appears the low elevation at the bottom of the weir slot (ie. BOW bottom of wall) is 58.11 which would control the normal pool elevation of the lake.)* NP=58.24

   - The normal pool elevation for the lake has been added to the plan sheet.

3. ✓ Provide an as-built elevation for the invert bottom of the 1-year storm notch on the principal spillway structure.

   - An as-built elevation for the1-year storm notch bottom invert has been added to the plan sheet. PLAN 58.2 / AB 58.24

4. ✓ Provide as-built information for the constructed dimensions of the 1-year storm notch on the principal spillway structure. The approved design called for a 1.1 ft. wide by 2.7 ft. high notch.

   - The 1-year storm notch was constructed in accordance with the design plans and the as-built dimensions were confirmed in the field. PER PLAN

5. ✓ Provide an as-built elevation for the upstream invert in of the 4 x 4 box culvert. The approved design called this invert at El. 57.36. Similarly, provide an as-built elevation for the downstream invert out of the 4 x 4 box. AB 57.5 / PLAN 57.36

   - As-built invert elevations for the box culvert have been added to the plan sheet.

1001 Boulders Parkway, Suite 300 | Richmond, Virginia 23225
TEL 804.200.6500 FAX 804.560.1016
Site Development | Residential | Infrastructure | Technology
www.timmons.com

6. Use Sections B-B and C-C as provided on as-built drawing C1.5 to effectively show as-built information for the concrete principal spillway box structure.

    - As-built information has been added to sections B-B and C-C as requested.

7. Provide as-built information to show the emergency spillway crest met the approved plan specifications. The approved plan showed the crest elevation of the emergency spillway at El. 63.0.

    - As-built spot elevation information for the emergency spillway has been added to the plan sheet. CALLED MIKE CLAUD 4/16/07. ONE ES SPOT ELEV. MISSING.

8. It is preferred, if possible, that Section A-A from approved plan Sheet C1.6, annotated as necessary with as-built information, be included on the as-built drawing set as well as the maintenance plan for the BMP as provided on approved plan Sheet C1.4. This information will be crucial for future inspection and maintenance by the County.

    - This information has been added to the as-built drawing set as requested.

Please feel free to contact Drew Gould at (804) 433-2982 or me at (804) 200-6413 if you have any questions or need any additional information.

Sincerely,

Michael L. Claud, P.E.

cc: Wayland Bass, P.E. – James City County
Andrew Gould, P.E. – Timmons Group
Andy Curtis – Curtis Contracting

TIMMONS GROUP
YOUR VISION ACHIEVED THROUGH OURS.

Transmittal

Date: April 11, 2007

Job No.: 22547

RECEIVED
APR 12 2007
ENVIRONMENTAL DIVISION

To:
Scott Thomas P. E.
James City County
Environmental Division
101 Mounts Bay Road
Williamsburg, Virginia 23187-8784

Regarding: Warhill Site East and West Pond Dams As-built Drawings

We are sending you the following items: ☒ Attached ☐ Under separate cover via _____

☐ Shop Drawings ☐ Prints ☒ Plans ☐ Specifications
☐ Copy of Letter ☐ Change Order ☐ Other _____

Copies	Date	Description
1		Set of updated plans for the West Pond Dam
2		Sets of final as-built plans for the East Pond Dam
1		Sets of mylar as-built plans for the East Pond Dam

This information is transmitted as checked below:

☐ For Approval ☐ Approved as submitted ☐ Resubmit _____ copies for approval
☒ For your use ☐ Approved as noted ☐ Submit _____ copies for distribution
☒ As requested ☐ Returned for corrections ☐ Return _____ corrected prints
☐ For review/comment ☐ Other _____ ☐ for bids due _____
☐ Prints returned after loan to us

Remarks:
Scott,

Here are the plans you requested for the East Pond Dam and also a set of plans to address your latest comments for the West Pond dam. If you are satisfied with the West Pond dam plans we will get the additional sets printed and sent to you. Let me know if you have any questions.

thanks, Mike

Copy to:

Signed: _____
Michael L. Claud, P.E.
Phone: (804) 200-6413

If enclosures are not as noted, please notify us at once

1001 Boulders Parkway, Suite 300 | Richmond, VA 23225
Site Development | Residential | Infrastructure | Technology

Scott Thomas

From: Scott Thomas
Sent: Friday, May 05, 2006 3:55 PM
To: 'Andrew Gould'; 'Bill Richards'; Steven W. Hicks
Cc: Wayland Bass; Matthew J. Smolnik; Darryl Cook
Subject: Warhill PPEA: Review of Submitted Asbuilts
Attachments: SP-082-05.0.AB.doc; SP-143-05.0.AB.doc

Attached are two sets of County Environmental Division comments for the record drawings (asbuilts) and construction certifications as provided for the Warhill PPEA West Pond Dam PC 105, the storm trunk line (and associated road storm drainage piping) and the sediment forebay. One set of comments is for the West Pond PC 105, County Plan No. SP-82-05. The other set is for the Storm Trunk, Forebay and associated roadside storm drainage subsystem piping, County Plan No. SP-143-05.

Scott J. Thomas, P.E.
Chief Engineer - Stormwater
James City County
Environmental Division

SJT

ENVIRONMENTAL DIVISION REVIEW COMMENTS
WARHILL SITE ROADWAYS AND IMPROVEMENTS
WEST POND DAM - ASBUILT DRAWING REVIEW
COUNTY PLAN NO. SP – 82 - 05
May 5, 2006

Note: This review is associated with record drawings (asbuilts) as provided for the Western Pond Dam, County BMP ID Code PC 105. Applicable drawing sheets include cover C1.0 and C1.5.

Record Drawings

1. Reference the approved site plan number (SP-82-05) on the cover sheet.

2. Provide an asbuilt elevation for the new normal pool elevation of the lake. *(Note: It appears the low elevation at the bottom of the weir slot (ie. BOW bottom of wall) is 58.11 which would control the normal pool elevation of the lake.)*

3. Provide an asbuilt elevation for the invert bottom of the 1-year storm notch on the principal spillway structure.

4. Provide asbuilt information for the constructed dimensions of the 1-year storm notch on the principal spillway structure. The approved design called for a 1.1 ft. wide by 2.7 ft. high notch.

5. Provide an asbuilt elevation for the upstream invert in of the 4 x 4 box culvert. The approved design called this invert at El. 57.36. Similarly, provide an asbuilt elevation for the downstream invert out of the 4 x 4 box.

7. Use Sections B-B and C-C as provided on asbuilt drawing C1.5 to effectively show asbuilt information for the concrete principal spillway box structure.

8. Provide asbuilt information to show the emergency spillway crest met the approved plan specifications. The approved plan showed the crest elevation of the emergency spillway at El. 63.0.

9. It is preferred, if possible, that Section A-A from approved plan Sheet C1.6, annotated as necessary with asbuilt information, be included on the asbuilt drawing set as well as the maintenance plan for the BMP as provided on approved plan Sheet C1.4. This information will be crucial for future inspection and maintenance by the County.

Certification Report

10. Daily report logs in the bound "Construction Certification Forms" report appear to be also for other features than the West Pond Dam. It appears to include construction from other site activities including construction of the storm trunk line, utilities, roadways, forebay, etc. As the bound report is specific to the West Pond Dam, clarify on the report title or table of contents that daily reports reflect other items in addition to the west pond dam (ie. forebay, trunk line, etc.).

SJT

ENVIRONMENTAL DIVISION REVIEW COMMENTS
WARHILL SITE ROADWAYS AND IMPROVEMENTS
STORM TRUNK LINE AND FOREBAY - ASBUILT DRAWING REVIEW
COUNTY PLAN NO. SP – 143-05
May 5, 2006

Note: This review is associated with record drawings (asbuilts) as provided for the primary storm trunk line along Opportunity Way and the High School Access Road, associated incidental roadway inlets and storm drainage piping sub-sytems and the pretreatment sediment forebay upstream of the West Pond Dam PC 105. Applicable drawing sheets include cover C1.0, C5.0, C5.1, C6.0, C6.1, C7.0, C7.1, C8.0, C8.1, C9.0, C9.1 and C9.2.

Record Drawings

1. As a reminder, asbuilt drawings were required for the entire storm drainage piping system associated with this project in order to meet the provisions of Special Stormwater Criteria.

2. Reference the approved site plan number (SP-143-05) on the cover sheet.

3. Darken manhole (MH) structure labels on all plan sheets for the primary storm trunk line. They are difficult to read on the sheets as provided. This is for MH-2 to MH-16 along the main trunk alignment, plan and profile sheets.

4. Provide asbuilt information for JB-1 structure # 5-5 along Centerville Road.

5. Profile Sheet C5.1 shows that a flatter pipe slope was constructed for the 54-inch pipe segment between storm drainage structures MH-3 and MH-4. The approved design plan called for a slope of 0.0040 ft. per ft.; however, asbuilt information reflects a pipe slope of 0.0037 ft. per ft. Ensure that a flatter pipe slope for this segment does not affect the hydraulics of the storm trunk line.

6. Based on information on Sheet C6.0, it is unclear why the 24-inch pipe stub into storm structure # 6-6 was not constructed. This is pipe segment # 6-5 to # 6-6. The purpose of this pipe was for future connection to the storm trunk line from the unprogrammed County property situated to the west.

7. Asbuilt information shown for storm drainage structure # 6-7 on plan Sheet C6.0 shows the upstream invert elevation of the 24-inch east pipe stub to MH-7 was constructed approximately 2.14 feet higher than the approved design plan. As this culvert is a future connection to the TNCC site, ensure this elevation will not have a significant effect on the future drainage plan for the TNCC site.

8. On Sheet C6.0, provide asbuilt information for the 42-inch storm pipe segment # 6-10 to # 6-11.

9. Profile Sheet C6.1 shows that a flatter pipe slope was constructed for the 60-inch pipe segment between storm drainage structures MH-6 and MH-7. The approved design plan called for a slope of 0.0040 ft. per ft.; however, asbuilt information reflects a pipe slope of 0.0033 ft. per ft. Ensure that a flatter pipe slope for this segment does not affect the hydraulics of the storm trunk line.

10. On Sheet C6.1, show the asbuilt pipe slope for the 72-inch pipe segment between storm drainage structures MH-8 and MH-9. The asbuilt elevations shown for MH-8 and MH-9 would change the design plan pipe slope (0.0040 ft. per ft.). If flatter than the approved design plan, ensure that it does not affect the hydraulics of the storm trunk line.

11. On profile Sheet C7.1, show the asbuilt pipe slope for the 36-inch pipe segment between storm drainage structures # 7-6 to # 6-10. The asbuilt elevations shown for # 7-6 and # 6-10 would change the design plan pipe slope (0.010 ft. per ft.). If flatter than the approved design plan, ensure that it does not affect the hydraulics of the storm drainage system.

12. On profile Sheet C7.1, show the asbuilt pipe slope for the 36-inch pipe segment between storm drainage structures # 7-4 to # 7-6. The asbuilt elevations shown for # 7-4 and # 7-6 would change the design plan pipe slope (0.010 ft. per ft.). If flatter than the approved design plan, ensure that it does not affect the hydraulics of the storm drainage system.

13. On profile Sheet C7.1, show the asbuilt pipe slope for the 36-inch pipe segment between storm drainage structures # 7-4 to # 7-2. The asbuilt elevations shown for # 7-4 and # 7-2 would change the design plan pipe slope (0.015 ft. per ft.). If flatter than the approved design plan, ensure that it does not affect the hydraulics of the storm drainage system.

14. Profile Sheet C8.1 shows that a flatter pipe slope was constructed for the 72-inch pipe segment between storm drainage structures MH-11 and MH-12. The approved design plan called for a slope of 0.0040 ft. per ft.; however, asbuilt information reflects a pipe slope of 0.00332 ft. per ft. Ensure that a flatter pipe slope for this segment does not affect the hydraulics of the storm trunk line. *(Note: This was the boring across the existing powerline easement which has always been a critical segment in the hydraulic efficiency of the entire storm trunk line, especially as build out of the Warhill site progresses.)*

15. Profile Sheet C9.0 shows that a flatter pipe slope was constructed for the 72-inch pipe segment between storm drainage structures MH-13 and MH-14. The approved design plan called for a slope of 0.0060 ft. per ft.; however, asbuilt information reflects a pipe slope of 0.0057 ft. per ft. Ensure that a flatter pipe slope for this segment does not affect the hydraulics of the storm trunk line.

16. Profile Sheet C9.0 shows that a flatter pipe slope was constructed for the 72-inch pipe segment between storm drainage structures MH-14 and MH-15. The approved design plan called for a slope of 0.0060 ft. per ft.; however, asbuilt information reflects a pipe slope of 0.0056 ft. per ft. Ensure that a flatter pipe slope for this segment does not affect the hydraulics of the storm trunk line.

17. Profile Sheet C9.1 shows that a flatter pipe slope was constructed for the 72-inch pipe segment between storm drainage structures MH-15 and MH-16. The approved design plan called for a slope of 0.0060 ft. per ft.; however, asbuilt information reflects a pipe slope of 0.0057 ft. per ft. Ensure that a flatter pipe slope for this segment does not affect the hydraulics of the storm trunk line.

18. Show the asbuilt slope for the PG-5 paved channel on Sheet C9.1 based on the asbuilt inverts at the 72-inch storm outfall (El. 62.55), the actual constructed channel length and the outfall of the paved channel (El. 58.48).

19. Asbuilts and construction certification will be required for the storm drainage piping systems associated with the Centerville Road and Richmond Road portions of the project once completed.

Construction Certifications

20. Provide construction certification for the pretreatment sediment forebay. The standard form from the Page 4 of the *James City County Environmental Division, Stormwater Management/BMP Facilities, Record Drawing and Construction Certification Forms* can be used for this purpose.

21. Provide construction certification for the storm trunk line and associated roadway and site storm drainage subsystems which are conveyed to the trunk line. The standard form from the Page 4 of the *James City County Environmental Division, Stormwater Management/BMP Facilities, Record Drawing and Construction Certification Forms* can be used for this purpose.

Field-Related Comments

22. Based on our preliminary walk-through of the storm trunk line as performed on January 26th 2006, ensure the interior of storm drainage structure MH-11 is properly sealed against infiltration.

23. The "Sediment Depth Marker" as indicated on Sheet C9.2 of the approved plan was not found in the field.

TIMMONS GROUP
YOUR VISION ACHIEVED THROUGH OURS.

Transmittal

To:
Scott Thomas P. E.
James City County
Environmental Division
101 Mounts Bay Road
Williamsburg, Virginia 23187-8784

Date: April 17, 2007

Job No.: 22303

RECEIVED
APR 1 8 2007
ENVIRONMENTAL DIVISION

Regarding: Warhill Site West Pond Dam

We are sending you the following items: ☒ Attached ☐ Under separate cover via _____

☐ Shop Drawings ☐ Prints ☒ Plans ☐ Specifications
☐ Copy of Letter ☐ Change Order ☐ Other _____

Copies	Date	Description
2		Sets of as-built plans
1		set of as-built mylars

This information is transmitted as checked below:

☐ For Approval ☐ Approved as submitted ☐ Resubmit _____ copies for approval
☒ For your use ☐ Approved as noted ☐ Submit _____ copies for distribution
☒ As requested ☐ Returned for corrections ☐ Return _____ corrected prints
☐ For review/comment ☐ Other _____ ☐ for bids due _____
☐ Prints returned after loan to us

Remarks:
Scott,

Here are the plans and mylars for the West Pond Dam project. Please let me know if you need anything else.

thanks, Mike

Copy to:

Signed: _____
Michael L. Claud, P.E.
Phone: (804) 200-6413

If enclosures are not as noted, please notify us at once

1001 Boulders Parkway, Suite 300 | Richmond, VA 23225
TEL 804.200.6500 FAX 804.560.1016
Site Development | Residential | Infrastructure | Technology
www.timmons.com

File.... R:\000 - Timmons Group\22303\Pond\calc\Pond Pack\PPEA SITE INTERCONNECTED POND MODEL.PPW

Elevation (ft)	Planimeter (sq.in)	Area (acres)	A1+A2+sqr(A1*A2) (acres)	Volume (ac-ft)	Volume Sum (ac-ft)
39.00	-----	3.0600	.0000	.000	.000
40.00	-----	4.5100	11.2849	3.762	3.762
41.00	-----	6.4000	16.2825	5.428	9.189
42.00	-----	12.2600	27.5180	9.173	18.362
43.00	-----	16.2700	42.6534	14.218	32.580
44.00	-----	20.9300	55.6535	18.551	51.131
45.00	-----	22.2300	64.7302	21.577	72.708
50.00	-----	52.6700	109.1177	181.863	254.570
51.00	-----	56.3100	163.4396	54.480	309.050

POND VOLUME EQUATIONS

* Incremental volume computed by the Conic Method for Reservoir Volumes.

Volume = (1/3) * (EL2-EL1) * (Area1 + Area2 + sq.rt.(Area1*Area2))

where: EL1, EL2 = Lower and upper elevations of the increment
Area1,Area2 = Areas computed for EL1, EL2, respectively
Volume = Incremental volume between EL1 and EL2

File.... R:\000 - Timmons Group\22303\Pond\calc\Pond Pack\PPEA SITE INTERCONNECTED POND MODEL.PPW

REQUESTED POND WS ELEVATIONS:

Min. Elev.= 39.00 ft
Increment = 1.00 ft
Max. Elev.= 51.00 ft

****
OUTLET CONNECTIVITY
****

---> Forward Flow Only (UpStream to DnStream)
<--- Reverse Flow Only (DnStream to UpStream)
<---> Forward and Reverse Both Allowed

Structure	No.		Outfall	E1, ft	E2, ft
Culvert-Circular	3	--->	TW	46.000	51.000
Stand Pipe	1	--->	2	44.000	51.000
Culvert-Circular	2	--->	TW	39.750	51.000
TW SETUP, DS Channel					

OUTLET STRUCTURE INPUT DATA

```
Structure ID       = 3
Structure Type     = Culvert-Circular
-----------------------------------
No. Barrels        =         4
Barrel Diameter    =    4.5000 ft
Upstream Invert    =     46.00 ft
Dnstream Invert    =     44.00 ft
Horiz. Length      =     50.00 ft
Barrel Length      =     50.04 ft
Barrel Slope       =    .04000 ft/ft

OUTLET CONTROL DATA...
Mannings n         =     .0130
Ke                 =     .0000  (forward entrance loss)
Kb                 =   .004209  (per ft of full flow)
Kr                 =     .0000  (reverse entrance loss)
HW Convergence     =      .001  +/- ft

INLET CONTROL DATA...
Equation form      =         1
Inlet Control K    =     .0098
Inlet Control M    =    2.0000
Inlet Control c    =    .03980
Inlet Control Y    =     .6700
T1 ratio (HW/D)    =     1.140
T2 ratio (HW/D)    =     1.287
Slope Factor       =     -.500
Calc inlet only    = Yes
```

Use unsubmerged inlet control Form 1 equ. below T1 elev.
Use submerged inlet control Form 1 equ. above T2 elev.

In transition zone between unsubmerged and submerged inlet control,
interpolate between flows at T1 & T2...
At T1 Elev = 51.13 ft ---> Flow = 118.08 cfs
At T2 Elev = 51.79 ft ---> Flow = 134.95 cfs

File.... R:\000 - Timmons Group\22303\Pond\calc\Pond Pack\PPEA SITE INTERCONNECTED POND MODEL.PPW

OUTLET STRUCTURE INPUT DATA

```
Structure ID      = 1
Structure Type    = Stand Pipe
-----------------------------------
# of Openings     =         1
Invert Elev.      =     44.00 ft
Diameter          =    3.0000 ft
Orifice Area      =    7.0686 sq.ft
Orifice Coeff.    =      .600
Weir Length       =      9.42 ft
Weir Coeff.       =     2.800
K, Submerged      =      .000
K, Reverse        =     1.000
Kb,Barrel         =   .000000  (per ft of full flow)
Barrel Length     =       .00 ft
Mannings n        =     .0000
```

File.... R:\000 - Timmons Group\22303\Pond\calc\Pond Pack\PPEA SITE INTERCONNECTED POND MODEL.PPW

OUTLET STRUCTURE INPUT DATA

```
Structure ID      = 2
Structure Type    = Culvert-Circular
-----------------------------------
No. Barrels       =         1
Barrel Diameter   =    2.0000 ft
Upstream Invert   =     39.75 ft
Dnstream Invert   =     38.75 ft
Horiz. Length     =    100.00 ft
Barrel Length     =    100.01 ft
Barrel Slope      =    .01000 ft/ft

OUTLET CONTROL DATA...
Mannings n        =     .0130
Ke                =     .0000  (forward entrance loss)
Kb                =   .012411  (per ft of full flow)
Kr                =     .0000  (reverse entrance loss)
HW Convergence    =      .001  +/- ft

INLET CONTROL DATA...
Equation form     =         1
Inlet Control K   =     .0045
Inlet Control M   =    2.0000
Inlet Control c   =    .03170
Inlet Control Y   =     .6900
T1 ratio (HW/D)   =     1.090
T2 ratio (HW/D)   =     1.192
Slope Factor      =     -.500
Calc inlet only   = Yes

Use unsubmerged inlet control Form 1 equ. below T1 elev.
Use   submerged inlet control Form 1 equ. above T2 elev.

In transition zone between unsubmerged and submerged inlet control,
interpolate between flows at T1 & T2...
At T1 Elev =     41.93 ft  --->  Flow =     15.55 cfs
At T2 Elev =     42.13 ft  --->  Flow =     17.77 cfs


Structure ID      = TW
Structure Type    = TW SETUP, DS Channel
-----------------------------------
FREE OUTFALL CONDITIONS SPECIFIED

CONVERGENCE TOLERANCES...
Maximum Iterations=    30
Min. TW tolerance =    .01 ft
Max. TW tolerance =    .01 ft
Min. HW tolerance =    .01 ft
Max. HW tolerance =    .01 ft
Min.  Q tolerance =    .10 cfs
Max.  Q tolerance =    .10 cfs
```

File.... R:\000 - Timmons Group\22303\Pond\calc\Pond Pack\PPEA SITE INTERCONNECTED POND MODEL.PPW

***** COMPOSITE OUTFLOW SUMMARY ****

WS Elev, Total Q		Converge		Notes
Elev. ft	Q cfs	TW Elev ft	Error +/-ft	Contributing Structures
39.00	.00	Free Outfall		(no Q: 3,1,2)
39.75	.00	Free Outfall		(no Q: 3,1,2)
40.00	.00	Free Outfall		(no Q: 3,1,2)
41.00	.00	Free Outfall		(no Q: 3,1,2)
42.00	.00	Free Outfall		(no Q: 3,1,2)
43.00	.00	Free Outfall		(no Q: 3,1,2)
44.00	.00	Free Outfall		(no Q: 3,1,2)
45.00	26.39	Free Outfall		1,2 (no Q: 3)
46.00	38.98	Free Outfall		1,2 (no Q: 3)
47.00	75.69	Free Outfall		3,1,2
48.00	157.67	Free Outfall		3,1,2
49.00	268.11	Free Outfall		3,1,2
50.00	390.18	Free Outfall		3,1,2
51.00	512.46	Free Outfall		3,1,2

TIME vs. ELEVATION (ft)

Output Time increment = .0500 hrs
Time on left represents time for first value in each row.

Time hrs					
65.7500	58.77	58.76	58.76	58.76	58.76
66.0000	58.76	58.76	58.76	58.76	58.76
66.2500	58.76	58.76	58.76	58.76	58.75
66.5000	58.75	58.75	58.75	58.75	58.75
66.7500	58.75	58.75	58.75	58.75	58.75
67.0000	58.75	58.75	58.74	58.74	58.74
67.2500	58.74	58.74	58.74	58.74	58.74
67.5000	58.74	58.74	58.74	58.74	58.74
67.7500	58.73	58.73	58.73	58.73	58.73
68.0000	58.73	58.73	58.73	58.73	58.73
68.2500	58.73	58.73	58.73	58.73	58.72
68.5000	58.72	58.72	58.72	58.72	58.72
68.7500	58.72	58.72	58.72	58.72	58.72
69.0000	58.72	58.72	58.72	58.71	58.71
69.2500	58.71	58.71	58.71	58.71	58.71
69.5000	58.71	58.71	58.71	58.71	58.71
69.7500	58.71	58.71	58.70	58.70	58.70
70.0000	58.70	58.70	58.70	58.70	58.70
70.2500	58.70	58.70	58.70	58.70	58.70
70.5000	58.70	58.70	58.69	58.69	58.69
70.7500	58.69	58.69	58.69	58.69	58.69
71.0000	58.69	58.69	58.69	58.69	58.69
71.2500	58.69	58.68	58.68	58.68	58.68
71.5000	58.68	58.68	58.68	58.68	58.68
71.7500	58.68	58.68	58.68	58.68	58.68
72.0000	58.68	58.68	58.67	58.67	58.67
72.2500	58.67	58.67	58.67	58.67	58.67
72.5000	58.67	58.67	58.67	58.67	58.67
72.7500	58.67	58.67	58.66	58.66	58.66
73.0000	58.66	58.66	58.66	58.66	58.66
73.2500	58.66	58.66	58.66	58.66	58.66
73.5000	58.66	58.66	58.66	58.65	58.65
73.7500	58.65	58.65	58.65	58.65	58.65
74.0000	58.65	58.65	58.65	58.65	58.65
74.2500	58.65	58.65	58.65	58.65	58.64
74.5000	58.64	58.64	58.64	58.64	58.64
74.7500	58.64	58.64	58.64	58.64	58.64
75.0000	58.64	58.64	58.64	58.64	58.64
75.2500	58.63	58.63	58.63	58.63	58.63
75.5000	58.63	58.63	58.63	58.63	58.63
75.7500	58.63	58.63	58.63	58.63	58.63
76.0000	58.63	58.63	58.62	58.62	58.62
76.2500	58.62	58.62	58.62	58.62	58.62
76.5000	58.62	58.62	58.62	58.62	58.62

TIME vs. ELEVATION (ft)

Output Time increment = .0500 hrs
Time on left represents time for first value in each row.

Time hrs					
76.7500	58.62	58.62	58.62	58.62	58.62
77.0000	58.61	58.61	58.61	58.61	58.61
77.2500	58.61	58.61	58.61	58.61	58.61
77.5000	58.61	58.61	58.61	58.61	58.61
77.7500	58.61	58.61	58.60	58.60	58.60
78.0000	58.60	58.60	58.60	58.60	58.60
78.2500	58.60	58.60	58.60	58.60	58.60
78.5000	58.60	58.60	58.60	58.60	58.60
78.7500	58.59	58.59	58.59	58.59	58.59
79.0000	58.59	58.59	58.59	58.59	58.59
79.2500	58.59	58.59	58.59	58.59	58.59
79.5000	58.59	58.59	58.59	58.59	58.58
79.7500	58.58	58.58	58.58	58.58	58.58
80.0000	58.58	58.58	58.58	58.58	58.58
80.2500	58.58	58.58	58.58	58.58	58.58
80.5000	58.58	58.58	58.58	58.57	58.57
80.7500	58.57	58.57	58.57	58.57	58.57
81.0000	58.57	58.57	58.57	58.57	58.57
81.2500	58.57	58.57	58.57	58.57	58.57
81.5000	58.57	58.57	58.57	58.56	58.56
81.7500	58.56	58.56	58.56	58.56	58.56
82.0000	58.56	58.56	58.56	58.56	58.56
82.2500	58.56	58.56	58.56	58.56	58.56
82.5000	58.56	58.56	58.56	58.55	58.55
82.7500	58.55	58.55	58.55	58.55	58.55
83.0000	58.55	58.55	58.55	58.55	58.55
83.2500	58.55	58.55	58.55	58.55	58.55
83.5000	58.55	58.55	58.55	58.55	58.54
83.7500	58.54	58.54	58.54	58.54	58.54
84.0000	58.54	58.54	58.54	58.54	58.54
84.2500	58.54	58.54	58.54	58.54	58.54
84.5000	58.54	58.54	58.54	58.54	58.54
84.7500	58.53	58.53	58.53	58.53	58.53
85.0000	58.53	58.53	58.53	58.53	58.53
85.2500	58.53	58.53	58.53	58.53	58.53
85.5000	58.53	58.53	58.53	58.53	58.53
85.7500	58.53	58.53	58.52	58.52	58.52
86.0000	58.52	58.52	58.52	58.52	58.52
86.2500	58.52	58.52	58.52	58.52	58.52
86.5000	58.52	58.52	58.52	58.52	58.52
86.7500	58.52	58.52	58.52	58.52	58.52
87.0000	58.51	58.51	58.51	58.51	58.51
87.2500	58.51	58.51	58.51	58.51	58.51
87.5000	58.51	58.51	58.51	58.51	58.51

Type.... Time-Elev
Name.... PC105 Tag: 1 Event: 1 yr
File.... R:\000 - Timmons Group\22303\Pond\calc\Pond Pack\PPEA SITE INTERCONNECTED POND MODEL.PPW
Storm... TypeII 24hr Tag: 1

TIME vs. ELEVATION (ft)

Output Time increment = .0500 hrs
Time on left represents time for first value in each row.

Time hrs					
87.7500	58.51	58.51	58.51	58.51	58.51
88.0000	58.51	58.51	58.51	58.50	58.50
88.2500	58.50	58.50	58.50	58.50	58.50
88.5000	58.50	58.50	58.50	58.50	58.50
88.7500	58.50	58.50	58.50	58.50	58.50
89.0000	58.50	58.50	58.50	58.50	58.50
89.2500	58.50	58.50	58.49	58.49	58.49
89.5000	58.49	58.49	58.49	58.49	58.49
89.7500	58.49	58.49	58.49	58.49	58.49
90.0000	58.49	58.49	58.49	58.49	58.49
90.2500	58.49	58.49	58.49	58.49	58.49
90.5000	58.49	58.49	58.48	58.48	58.48
90.7500	58.48	58.48	58.48	58.48	58.48
91.0000	58.48	58.48	58.48	58.48	58.48
91.2500	58.48	58.48	58.48	58.48	58.48
91.5000	58.48	58.48	58.48	58.48	58.48
91.7500	58.48	58.48	58.48	58.47	58.47
92.0000	58.47	58.47	58.47	58.47	58.47
92.2500	58.47	58.47	58.47	58.47	58.47
92.5000	58.47	58.47	58.47	58.47	58.47
92.7500	58.47	58.47	58.47	58.47	58.47
93.0000	58.47	58.47	58.47	58.47	58.47
93.2500	58.46	58.46	58.46	58.46	58.46
93.5000	58.46	58.46	58.46	58.46	58.46
93.7500	58.46	58.46	58.46	58.46	58.46
94.0000	58.46	58.46	58.46	58.46	58.46
94.2500	58.46	58.46	58.46	58.46	58.46
94.5000	58.46	58.46	58.46	58.45	58.45
94.7500	58.45	58.45	58.45	58.45	58.45
95.0000	58.45	58.45	58.45	58.45	58.45
95.2500	58.45	58.45	58.45	58.45	58.45
95.5000	58.45	58.45	58.45	58.45	58.45
95.7500	58.45	58.45	58.45	58.45	58.45
96.0000	58.45	58.45	58.44	58.44	58.44
96.2500	58.44	58.44	58.44	58.44	58.44
96.5000	58.44	58.44	58.44	58.44	58.44
96.7500	58.44	58.44	58.44	58.44	58.44
97.0000	58.44	58.44	58.44	58.44	58.44
97.2500	58.44	58.44	58.44	58.44	58.44
97.5000	58.44	58.44	58.43	58.43	58.43
97.7500	58.43	58.43	58.43	58.43	58.43
98.0000	58.43	58.43	58.43	58.43	58.43
98.2500	58.43	58.43	58.43	58.43	58.43
98.5000	58.43	58.43	58.43	58.43	58.43

TIME vs. ELEVATION (ft)

Output Time increment = .0500 hrs
Time on left represents time for first value in each row.

Time hrs					
98.7500	58.43	58.43	58.43	58.43	58.43
99.0000	58.43	58.43	58.43	58.43	58.42
99.2500	58.42	58.42	58.42	58.42	58.42
99.5000	58.42	58.42	58.42	58.42	58.42
99.7500	58.42	58.42	58.42	58.42	58.42
100.0000	58.42	58.42	58.42	58.42	58.42
100.2500	58.42	58.42	58.42	58.42	58.42
100.5000	58.42	58.42	58.42	58.42	58.42
100.7500	58.42	58.42	58.41	58.41	58.41
101.0000	58.41	58.41	58.41	58.41	58.41
101.2500	58.41	58.41	58.41	58.41	58.41
101.5000	58.41	58.41	58.41	58.41	58.41
101.7500	58.41	58.41	58.41	58.41	58.41
102.0000	58.41	58.41	58.41	58.41	58.41
102.2500	58.41	58.41	58.41	58.41	58.41
102.5000	58.41	58.40	58.40	58.40	58.40
102.7500	58.40	58.40	58.40	58.40	58.40
103.0000	58.40	58.40	58.40	58.40	58.40
103.2500	58.40	58.40	58.40	58.40	58.40
103.5000	58.40	58.40	58.40	58.40	58.40
103.7500	58.40	58.40	58.40	58.40	58.40
104.0000	58.40	58.40	58.40	58.40	58.40
104.2500	58.40	58.40	58.40	58.39	58.39
104.5000	58.39	58.39	58.39	58.39	58.39
104.7500	58.39	58.39	58.39	58.39	58.39
105.0000	58.39	58.39	58.39	58.39	58.39
105.2500	58.39	58.39	58.39	58.39	58.39
105.5000	58.39	58.39	58.39	58.39	58.39
105.7500	58.39	58.39	58.39	58.39	58.39
106.0000	58.39	58.39	58.39	58.39	58.39
106.2500	58.39	58.38	58.38	58.38	58.38
106.5000	58.38	58.38	58.38	58.38	58.38
106.7500	58.38	58.38	58.38	58.38	58.38
107.0000	58.38	58.38	58.38	58.38	58.38
107.2500	58.38	58.38	58.38	58.38	58.38
107.5000	58.38	58.38	58.38	58.38	58.38
107.7500	58.38	58.38	58.38	58.38	58.38
108.0000	58.38	58.38	58.38	58.38	58.38
108.2500	58.38	58.37	58.37	58.37	58.37
108.5000	58.37	58.37	58.37	58.37	58.37
108.7500	58.37	58.37	58.37	58.37	58.37
109.0000	58.37	58.37	58.37	58.37	58.37
109.2500	58.37	58.37	58.37	58.37	58.37
109.5000	58.37	58.37	58.37	58.37	58.37

TIME vs. ELEVATION (ft)

Output Time increment = .0500 hrs
Time on left represents time for first value in each row.

Time hrs					
109.7500	58.37	58.37	58.37	58.37	58.37
110.0000	58.37	58.37	58.37	58.37	58.37
110.2500	58.37	58.37	58.37	58.37	58.36
110.5000	58.36	58.36	58.36	58.36	58.36
110.7500	58.36	58.36	58.36	58.36	58.36
111.0000	58.36	58.36	58.36	58.36	58.36
111.2500	58.36	58.36	58.36	58.36	58.36
111.5000	58.36	58.36	58.36	58.36	58.36
111.7500	58.36	58.36	58.36	58.36	58.36
112.0000	58.36	58.36	58.36	58.36	58.36
112.2500	58.36	58.36	58.36	58.36	58.36
112.5000	58.36	58.36	58.36	58.36	58.35
112.7500	58.35	58.35	58.35	58.35	58.35
113.0000	58.35	58.35	58.35	58.35	58.35
113.2500	58.35	58.35	58.35	58.35	58.35
113.5000	58.35	58.35	58.35	58.35	58.35
113.7500	58.35	58.35	58.35	58.35	58.35
114.0000	58.35	58.35	58.35	58.35	58.35
114.2500	58.35	58.35	58.35	58.35	58.35
114.5000	58.35	58.35	58.35	58.35	58.35
114.7500	58.35	58.35	58.35	58.35	58.35
115.0000	58.35	58.35	58.35	58.34	58.34
115.2500	58.34	58.34	58.34	58.34	58.34
115.5000	58.34	58.34	58.34	58.34	58.34
115.7500	58.34	58.34	58.34	58.34	58.34
116.0000	58.34	58.34	58.34	58.34	58.34
116.2500	58.34	58.34	58.34	58.34	58.34
116.5000	58.34	58.34	58.34	58.34	58.34
116.7500	58.34	58.34	58.34	58.34	58.34
117.0000	58.34	58.34	58.34	58.34	58.34
117.2500	58.34	58.34	58.34	58.34	58.34
117.5000	58.34	58.34	58.34	58.34	58.33
117.7500	58.33	58.33	58.33	58.33	58.33
118.0000	58.33	58.33	58.33	58.33	58.33
118.2500	58.33	58.33	58.33	58.33	58.33
118.5000	58.33	58.33	58.33	58.33	58.33
118.7500	58.33	58.33	58.33	58.33	58.33
119.0000	58.33	58.33	58.33	58.33	58.33
119.2500	58.33	58.33	58.33	58.33	58.33
119.5000	58.33	58.33	58.33	58.33	58.33
119.7500	58.33	58.33	58.33	58.33	58.33
120.0000	58.33	58.33	58.33	58.33	58.33
120.2500	58.33	58.33	58.33	58.33	58.33
120.5000	58.32	58.32	58.32	58.32	58.32

TIME vs. ELEVATION (ft)

Output Time increment = .0500 hrs
Time on left represents time for first value in each row.

Time hrs					
120.7500	58.32	58.32	58.32	58.32	58.32
121.0000	58.32	58.32	58.32	58.32	58.32
121.2500	58.32	58.32	58.32	58.32	58.32
121.5000	58.32	58.32	58.32	58.32	58.32
121.7500	58.32	58.32	58.32	58.32	58.32
122.0000	58.32	58.32	58.32	58.32	58.32
122.2500	58.32	58.32	58.32	58.32	58.32
122.5000	58.32	58.32	58.32	58.32	58.32
122.7500	58.32	58.32	58.32	58.32	58.32
123.0000	58.32	58.32	58.32	58.32	58.32
123.2500	58.32	58.32	58.32	58.32	58.32
123.5000	58.32	58.31	58.31	58.31	58.31
123.7500	58.31	58.31	58.31	58.31	58.31
124.0000	58.31	58.31	58.31	58.31	58.31
124.2500	58.31	58.31	58.31	58.31	58.31
124.5000	58.31	58.31	58.31	58.31	58.31
124.7500	58.31	58.31	58.31	58.31	58.31
125.0000	58.31	58.31	58.31	58.31	58.31
125.2500	58.31	58.31	58.31	58.31	58.31
125.5000	58.31	58.31	58.31	58.31	58.31
125.7500	58.31	58.31	58.31	58.31	58.31
126.0000	58.31	58.31	58.31	58.31	58.31
126.2500	58.31	58.31	58.31	58.31	58.31
126.5000	58.31	58.31	58.31	58.31	58.31
126.7500	58.31	58.31	58.30	58.30	58.30
127.0000	58.30	58.30	58.30	58.30	58.30
127.2500	58.30	58.30	58.30	58.30	58.30
127.5000	58.30	58.30	58.30	58.30	58.30
127.7500	58.30	58.30	58.30	58.30	58.30
128.0000	58.30	58.30	58.30	58.30	58.30
128.2500	58.30	58.30	58.30	58.30	58.30
128.5000	58.30	58.30	58.30	58.30	58.30
128.7500	58.30	58.30	58.30	58.30	58.30
129.0000	58.30	58.30	58.30	58.30	58.30
129.2500	58.30	58.30	58.30	58.30	58.30
129.5000	58.30	58.30	58.30	58.30	58.30
129.7500	58.30	58.30	58.30	58.30	58.30
130.0000	58.30	58.30	58.30	58.30	58.30
130.2500	58.30	58.30	58.30	58.30	58.29
130.5000	58.29	58.29	58.29	58.29	58.29
130.7500	58.29	58.29	58.29	58.29	58.29
131.0000	58.29	58.29	58.29	58.29	58.29
131.2500	58.29	58.29	58.29	58.29	58.29
131.5000	58.29	58.29	58.29	58.29	58.29

TIME vs. ELEVATION (ft)

Output Time increment = .0500 hrs
Time on left represents time for first value in each row.

Time hrs					
131.7500	58.29	58.29	58.29	58.29	58.29
132.0000	58.29	58.29	58.29	58.29	58.29
132.2500	58.29	58.29	58.29	58.29	58.29
132.5000	58.29	58.29	58.29	58.29	58.29
132.7500	58.29	58.29	58.29	58.29	58.29
133.0000	58.29	58.29	58.29	58.29	58.29
133.2500	58.29	58.29	58.29	58.29	58.29
133.5000	58.29	58.29	58.29	58.29	58.29
133.7500	58.29	58.29	58.29	58.29	58.29
134.0000	58.29	58.29	58.29	58.29	58.29
134.2500	58.29	58.29	58.29	58.29	58.29
134.5000	58.28	58.28	58.28	58.28	58.28
134.7500	58.28	58.28	58.28	58.28	58.28
135.0000	58.28	58.28	58.28	58.28	58.28
135.2500	58.28	58.28	58.28	58.28	58.28
135.5000	58.28	58.28	58.28	58.28	58.28
135.7500	58.28	58.28	58.28	58.28	58.28
136.0000	58.28	58.28	58.28	58.28	58.28
136.2500	58.28	58.28	58.28	58.28	58.28
136.5000	58.28	58.28	58.28	58.28	58.28
136.7500	58.28	58.28	58.28	58.28	58.28
137.0000	58.28	58.28	58.28	58.28	58.28
137.2500	58.28	58.28	58.28	58.28	58.28
137.5000	58.28	58.28	58.28	58.28	58.28
137.7500	58.28	58.28	58.28	58.28	58.28
138.0000	58.28	58.28	58.28	58.28	58.28
138.2500	58.28	58.28	58.28	58.28	58.28
138.5000	58.28	58.28	58.28	58.28	58.28
138.7500	58.28	58.28	58.28	58.28	58.28
139.0000	58.28	58.27	58.27	58.27	58.27
139.2500	58.27	58.27	58.27	58.27	58.27
139.5000	58.27	58.27	58.27	58.27	58.27
139.7500	58.27	58.27	58.27	58.27	58.27
140.0000	58.27	58.27	58.27	58.27	58.27
140.2500	58.27	58.27	58.27	58.27	58.27
140.5000	58.27	58.27	58.27	58.27	58.27
140.7500	58.27	58.27	58.27	58.27	58.27
141.0000	58.27	58.27	58.27	58.27	58.27
141.2500	58.27	58.27	58.27	58.27	58.27
141.5000	58.27	58.27	58.27	58.27	58.27
141.7500	58.27	58.27	58.27	58.27	58.27
142.0000	58.27	58.27	58.27	58.27	58.27
142.2500	58.27	58.27	58.27	58.27	58.27
142.5000	58.27	58.27	58.27	58.27	58.27

TIME vs. ELEVATION (ft)

Output Time increment = .0500 hrs
Time on left represents time for first value in each row.

Time hrs					
142.7500	58.27	58.27	58.27	58.27	58.27
143.0000	58.27	58.27	58.27	58.27	58.27
143.2500	58.27	58.27	58.27	58.27	58.27
143.5000	58.27	58.27	58.27	58.27	58.27
143.7500	58.27	58.27	58.27	58.27	58.27
144.0000	58.27	58.27	58.27	58.27	58.27
144.2500	58.26	58.26	58.26	58.26	58.26
144.5000	58.26	58.26	58.26	58.26	58.26
144.7500	58.26	58.26	58.26	58.26	58.26
145.0000	58.26	58.26	58.26	58.26	58.26
145.2500	58.26	58.26	58.26	58.26	58.26
145.5000	58.26	58.26	58.26	58.26	58.26
145.7500	58.26	58.26	58.26	58.26	58.26
146.0000	58.26	58.26	58.26	58.26	58.26
146.2500	58.26	58.26	58.26	58.26	58.26
146.5000	58.26	58.26	58.26	58.26	58.26
146.7500	58.26	58.26	58.26	58.26	58.26
147.0000	58.26	58.26	58.26	58.26	58.26
147.2500	58.26	58.26	58.26	58.26	58.26
147.5000	58.26	58.26	58.26	58.26	58.26
147.7500	58.26	58.26	58.26	58.26	58.26
148.0000	58.26	58.26	58.26	58.26	58.26
148.2500	58.26	58.26	58.26	58.26	58.26
148.5000	58.26	58.26	58.26	58.26	58.26
148.7500	58.26	58.26	58.26	58.26	58.26
149.0000	58.26	58.26	58.26	58.26	58.26
149.2500	58.26	58.26	58.26	58.26	58.26
149.5000	58.26	58.26	58.26	58.26	58.26
149.7500	58.26	58.26	58.26	58.26	58.26
150.0000	58.26				

File.... R:\000 - Timmons Group\22303\Pond\calc\Pond Pack\PPEA SITE INTERCONNECTED POND MODEL.PPW

PC105

Elevation (ft)	Planimeter (sq.in)	Area (acres)	A1+A2+sqr(A1*A2) (acres)	Volume (ac-ft)	Volume Sum (ac-ft)
50.00	-----	1.4715	.0000	.000	.000
55.00	-----	4.0866	8.0103	13.351	13.351
58.00	-----	7.1800	16.6834	16.683	30.034
61.00	-----	8.0000	22.7589	22.759 ?	52.793
62.00	-----	9.5168	26.2423	8.747	61.540
64.00	-----	11.8541	31.9923	21.328	82.868
66.00	-----	14.3800	39.2902	26.193	109.062

POND VOLUME EQUATIONS

* Incremental volume computed by the Conic Method for Reservoir Volumes.

Volume = (1/3) * (EL2-EL1) * (Area1 + Area2 + sq.rt.(Area1*Area2))

where: EL1, EL2 = Lower and upper elevations of the increment
Area1,Area2 = Areas computed for EL1, EL2, respectively
Volume = Incremental volume between EL1 and EL2

TIME vs. ELEVATION (ft)

Output Time increment = .0500 hrs
Time on left represents time for first value in each row.

Time hrs					
21.7500	60.13	60.13	60.13	60.13	60.13
22.0000	60.13	60.13	60.13	60.13	60.13
22.2500	60.13	60.13	60.13	60.13	60.13
22.5000	60.13	60.13	60.13	60.13	60.13
22.7500	60.13	60.13	60.13	60.13	60.13
23.0000	60.13	60.13	60.13	60.13	60.13
23.2500	60.13	60.13	60.13	60.13	60.13
23.5000	60.13	60.13	60.13	60.12	60.12
23.7500	60.12	60.12	60.12	60.12	60.12
24.0000	60.12	60.12	60.12	60.12	60.12
24.2500	60.12	60.12	60.11	60.11	60.11
24.5000	60.11	60.10	60.10	60.10	60.10
24.7500	60.09	60.09	60.09	60.08	60.08
25.0000	60.08	60.07	60.07	60.07	60.07
25.2500	60.06	60.06	60.06	60.05	60.05
25.5000	60.05	60.04	60.04	60.04	60.04
25.7500	60.03	60.03	60.03	60.02	60.02
26.0000	60.02	60.02	60.01	60.01	60.01
26.2500	60.00	60.00	60.00	59.99	59.99
26.5000	59.99	59.99	59.98	59.98	59.98
26.7500	59.97	59.97	59.97	59.97	59.96
27.0000	59.96	59.96	59.95	59.95	59.95
27.2500	59.95	59.94	59.94	59.94	59.94
27.5000	59.93	59.93	59.93	59.92	59.92
27.7500	59.92	59.92	59.91	59.91	59.91
28.0000	59.90	59.90	59.90	59.90	59.89
28.2500	59.89	59.89	59.89	59.88	59.88
28.5000	59.88	59.87	59.87	59.87	59.87
28.7500	59.86	59.86	59.86	59.86	59.85
29.0000	59.85	59.85	59.85	59.84	59.84
29.2500	59.84	59.83	59.83	59.83	59.83
29.5000	59.82	59.82	59.82	59.82	59.81
29.7500	59.81	59.81	59.81	59.80	59.80
30.0000	59.80	59.80	59.79	59.79	59.79
30.2500	59.79	59.78	59.78	59.78	59.78
30.5000	59.77	59.77	59.77	59.77	59.76
30.7500	59.76	59.76	59.76	59.75	59.75
31.0000	59.75	59.75	59.74	59.74	59.74
31.2500	59.74	59.73	59.73	59.73	59.73
31.5000	59.72	59.72	59.72	59.72	59.71
31.7500	59.71	59.71	59.71	59.71	59.70
32.0000	59.70	59.70	59.70	59.69	59.69
32.2500	59.69	59.69	59.68	59.68	59.68
32.5000	59.68	59.67	59.67	59.67	59.67

TIME vs. ELEVATION (ft)

Output Time increment = .0500 hrs
Time on left represents time for first value in each row.

Time hrs					
32.7500	59.67	59.66	59.66	59.66	59.66
33.0000	59.65	59.65	59.65	59.65	59.64
33.2500	59.64	59.64	59.64	59.64	59.63
33.5000	59.63	59.63	59.63	59.62	59.62
33.7500	59.62	59.62	59.62	59.61	59.61
34.0000	59.61	59.61	59.60	59.60	59.60
34.2500	59.60	59.60	59.59	59.59	59.59
34.5000	59.59	59.58	59.58	59.58	59.58
34.7500	59.58	59.57	59.57	59.57	59.57
35.0000	59.57	59.56	59.56	59.56	59.56
35.2500	59.56	59.55	59.55	59.55	59.55
35.5000	59.54	59.54	59.54	59.54	59.54
35.7500	59.53	59.53	59.53	59.53	59.53
36.0000	59.52	59.52	59.52	59.52	59.52
36.2500	59.51	59.51	59.51	59.51	59.51
36.5000	59.50	59.50	59.50	59.50	59.50
36.7500	59.49	59.49	59.49	59.49	59.49
37.0000	59.48	59.48	59.48	59.48	59.48
37.2500	59.47	59.47	59.47	59.47	59.47
37.5000	59.46	59.46	59.46	59.46	59.46
37.7500	59.45	59.45	59.45	59.45	59.45
38.0000	59.44	59.44	59.44	59.44	59.44
38.2500	59.44	59.43	59.43	59.43	59.43
38.5000	59.43	59.42	59.42	59.42	59.42
38.7500	59.42	59.41	59.41	59.41	59.41
39.0000	59.41	59.41	59.40	59.40	59.40
39.2500	59.40	59.40	59.39	59.39	59.39
39.5000	59.39	59.39	59.39	59.38	59.38
39.7500	59.38	59.38	59.38	59.37	59.37
40.0000	59.37	59.37	59.37	59.37	59.36
40.2500	59.36	59.36	59.36	59.36	59.36
40.5000	59.35	59.35	59.35	59.35	59.35
40.7500	59.34	59.34	59.34	59.34	59.34
41.0000	59.34	59.33	59.33	59.33	59.33
41.2500	59.33	59.33	59.32	59.32	59.32
41.5000	59.32	59.32	59.32	59.31	59.31
41.7500	59.31	59.31	59.31	59.31	59.30
42.0000	59.30	59.30	59.30	59.30	59.30
42.2500	59.29	59.29	59.29	59.29	59.29
42.5000	59.29	59.28	59.28	59.28	59.28
42.7500	59.28	59.28	59.27	59.27	59.27
43.0000	59.27	59.27	59.27	59.27	59.26
43.2500	59.26	59.26	59.26	59.26	59.26
43.5000	59.25	59.25	59.25	59.25	59.25

TIME vs. ELEVATION (ft)

Output Time increment = .0500 hrs
Time on left represents time for first value in each row.

Time hrs					
43.7500	59.25	59.25	59.24	59.24	59.24
44.0000	59.24	59.24	59.24	59.23	59.23
44.2500	59.23	59.23	59.23	59.23	59.23
44.5000	59.22	59.22	59.22	59.22	59.22
44.7500	59.22	59.21	59.21	59.21	59.21
45.0000	59.21	59.21	59.21	59.20	59.20
45.2500	59.20	59.20	59.20	59.20	59.20
45.5000	59.19	59.19	59.19	59.19	59.19
45.7500	59.19	59.19	59.18	59.18	59.18
46.0000	59.18	59.18	59.18	59.18	59.17
46.2500	59.17	59.17	59.17	59.17	59.17
46.5000	59.17	59.16	59.16	59.16	59.16
46.7500	59.16	59.16	59.16	59.15	59.15
47.0000	59.15	59.15	59.15	59.15	59.15
47.2500	59.14	59.14	59.14	59.14	59.14
47.5000	59.14	59.14	59.14	59.13	59.13
47.7500	59.13	59.13	59.13	59.13	59.13
48.0000	59.12	59.12	59.12	59.12	59.12
48.2500	59.12	59.12	59.12	59.11	59.11
48.5000	59.11	59.11	59.11	59.11	59.11
48.7500	59.10	59.10	59.10	59.10	59.10
49.0000	59.10	59.10	59.10	59.09	59.09
49.2500	59.09	59.09	59.09	59.09	59.09
49.5000	59.09	59.08	59.08	59.08	59.08
49.7500	59.08	59.08	59.08	59.08	59.07
50.0000	59.07	59.07	59.07	59.07	59.07
50.2500	59.07	59.07	59.06	59.06	59.06
50.5000	59.06	59.06	59.06	59.06	59.06
50.7500	59.06	59.05	59.05	59.05	59.05
51.0000	59.05	59.05	59.05	59.05	59.04
51.2500	59.04	59.04	59.04	59.04	59.04
51.5000	59.04	59.04	59.03	59.03	59.03
51.7500	59.03	59.03	59.03	59.03	59.03
52.0000	59.03	59.02	59.02	59.02	59.02
52.2500	59.02	59.02	59.02	59.02	59.02
52.5000	59.01	59.01	59.01	59.01	59.01
52.7500	59.01	59.01	59.01	59.01	59.00
53.0000	59.00	59.00	59.00	59.00	59.00
53.2500	59.00	59.00	59.00	58.99	58.99
53.5000	58.99	58.99	58.99	58.99	58.99
53.7500	58.99	58.99	58.98	58.98	58.98
54.0000	58.98	58.98	58.98	58.98	58.98
54.2500	58.98	58.97	58.97	58.97	58.97
54.5000	58.97	58.97	58.97	58.97	58.97

TIME vs. ELEVATION (ft)

Output Time increment = .0500 hrs
Time on left represents time for first value in each row.

Time hrs					
54.7500	58.97	58.96	58.96	58.96	58.96
55.0000	58.96	58.96	58.96	58.96	58.96
55.2500	58.95	58.95	58.95	58.95	58.95
55.5000	58.95	58.95	58.95	58.95	58.95
55.7500	58.94	58.94	58.94	58.94	58.94
56.0000	58.94	58.94	58.94	58.94	58.94
56.2500	58.93	58.93	58.93	58.93	58.93
56.5000	58.93	58.93	58.93	58.93	58.93
56.7500	58.92	58.92	58.92	58.92	58.92
57.0000	58.92	58.92	58.92	58.92	58.92
57.2500	58.91	58.91	58.91	58.91	58.91
57.5000	58.91	58.91	58.91	58.91	58.91
57.7500	58.90	58.90	58.90	58.90	58.90
58.0000	58.90	58.90	58.90	58.90	58.90
58.2500	58.89	58.89	58.89	58.89	58.89
58.5000	58.89	58.89	58.89	58.89	58.89
58.7500	58.89	58.88	58.88	58.88	58.88
59.0000	58.88	58.88	58.88	58.88	58.88
59.2500	58.88	58.88	58.87	58.87	58.87
59.5000	58.87	58.87	58.87	58.87	58.87
59.7500	58.87	58.87	58.86	58.86	58.86
60.0000	58.86	58.86	58.86	58.86	58.86
60.2500	58.86	58.86	58.86	58.85	58.85
60.5000	58.85	58.85	58.85	58.85	58.85
60.7500	58.85	58.85	58.85	58.85	58.85
61.0000	58.84	58.84	58.84	58.84	58.84
61.2500	58.84	58.84	58.84	58.84	58.84
61.5000	58.84	58.83	58.83	58.83	58.83
61.7500	58.83	58.83	58.83	58.83	58.83
62.0000	58.83	58.83	58.82	58.82	58.82
62.2500	58.82	58.82	58.82	58.82	58.82
62.5000	58.82	58.82	58.82	58.82	58.81
62.7500	58.81	58.81	58.81	58.81	58.81
63.0000	58.81	58.81	58.81	58.81	58.81
63.2500	58.81	58.80	58.80	58.80	58.80
63.5000	58.80	58.80	58.80	58.80	58.80
63.7500	58.80	58.80	58.80	58.79	58.79
64.0000	58.79	58.79	58.79	58.79	58.79
64.2500	58.79	58.79	58.79	58.79	58.79
64.5000	58.78	58.78	58.78	58.78	58.78
64.7500	58.78	58.78	58.78	58.78	58.78
65.0000	58.78	58.78	58.78	58.77	58.77
65.2500	58.77	58.77	58.77	58.77	58.77
65.5000	58.77	58.77	58.77	58.77	58.77

File.... R:\000 - Timmons Group\22303\Pond\calc\Pond Pack\PPEA SITE INTERCONNECTED POND MODEL.PPW

RUNOFF CURVE NUMBER DATA

Soil/Surface Description	CN	Area acres	Impervious Adjustment %C	Impervious Adjustment %UC	Adjusted CN
Residential 1/2 acre lots	80	79.700			80.00
Residential 1/3 acre lots	81	804.500			81.00
Forested Land	70	74.100			70.00
Existing pond	100	30.200			100.00
State roads & R/W	92	16.600			92.00
Utility easement	75	11.900			75.00
COMPOSITE AREA & WEIGHTED CN --->		1017.000			80.79 (81)

WARHILL TRAIL POND

TIME vs. ELEVATION (ft)

Output Time increment = .0500 hrs
Time on left represents time for first value in each row.

Time hrs					
.0000	58.00	58.00	58.00	58.00	58.00
.2500	58.00	58.00	58.00	58.00	58.00
.5000	58.00	58.00	58.00	58.00	58.00
.7500	58.00	58.00	58.00	58.00	58.00
1.0000	58.00	58.00	58.00	58.00	58.00
1.2500	58.00	58.00	58.00	58.00	58.00
1.5000	58.00	58.00	58.00	58.00	58.00
1.7500	58.00	58.00	58.00	58.00	58.00
2.0000	58.00	58.00	58.00	58.00	58.00
2.2500	58.00	58.00	58.00	58.00	58.00
2.5000	58.00	58.00	58.00	58.00	58.00
2.7500	58.00	58.00	58.00	58.00	58.00
3.0000	58.00	58.00	58.00	58.00	58.00
3.2500	58.00	58.00	58.00	58.00	58.00
3.5000	58.00	58.00	58.00	58.00	58.00
3.7500	58.00	58.00	58.00	58.00	58.00
4.0000	58.00	58.00	58.00	58.00	58.00
4.2500	58.00	58.00	58.00	58.00	58.00
4.5000	58.00	58.00	58.00	58.00	58.00
4.7500	58.00	58.00	58.00	58.00	58.00
5.0000	58.00	58.00	58.00	58.00	58.00
5.2500	58.00	58.00	58.00	58.00	58.00
5.5000	58.00	58.00	58.00	58.00	58.00
5.7500	58.00	58.00	58.00	58.00	58.00
6.0000	58.00	58.00	58.00	58.00	58.00
6.2500	58.00	58.00	58.00	58.00	58.00
6.5000	58.00	58.00	58.00	58.00	58.00
6.7500	58.00	58.00	58.00	58.00	58.00
7.0000	58.00	58.00	58.00	58.00	58.00
7.2500	58.00	58.00	58.00	58.00	58.00
7.5000	58.00	58.00	58.00	58.00	58.00
7.7500	58.00	58.00	58.00	58.00	58.00
8.0000	58.00	58.00	58.00	58.00	58.00
8.2500	58.00	58.00	58.00	58.00	58.00
8.5000	58.00	58.00	58.00	58.00	58.00
8.7500	58.00	58.00	58.00	58.00	58.00
9.0000	58.00	58.00	58.00	58.00	58.00
9.2500	58.00	58.00	58.00	58.00	58.00
9.5000	58.00	58.00	58.00	58.00	58.00
9.7500	58.00	58.00	58.00	58.00	58.00
10.0000	58.00	58.01	58.01	58.01	58.01
10.2500	58.01	58.01	58.01	58.01	58.01
10.5000	58.02	58.02	58.02	58.02	58.02

TIME vs. ELEVATION (ft)

Output Time increment = .0500 hrs
Time on left represents time for first value in each row.

Time hrs					
10.7500	58.02	58.03	58.03	58.03	58.03
11.0000	58.04	58.04	58.04	58.05	58.05
11.2500	58.06	58.06	58.07	58.07	58.08
11.5000	58.08	58.09	58.10	58.11	58.12
11.7500	58.14	58.16	58.20	58.25	58.32
12.0000	58.41	58.52	58.65	58.79	58.92
12.2500	59.03	59.13	59.21	59.28	59.34
12.5000	59.39	59.43	59.46	59.50	59.52
12.7500	59.55	59.57	59.59	59.61	59.63
13.0000	59.64	59.66	59.67	59.68	59.70
13.2500	59.71	59.72	59.73	59.74	59.75
13.5000	59.76	59.77	59.78	59.79	59.80
13.7500	59.81	59.82	59.82	59.83	59.84
14.0000	59.85	59.85	59.86	59.87	59.87
14.2500	59.88	59.88	59.89	59.89	59.90
14.5000	59.91	59.91	59.92	59.92	59.93
14.7500	59.93	59.94	59.94	59.95	59.95
15.0000	59.95	59.96	59.96	59.97	59.97
15.2500	59.98	59.98	59.98	59.99	59.99
15.5000	59.99	60.00	60.00	60.01	60.01
15.7500	60.01	60.02	60.02	60.02	60.02
16.0000	60.03	60.03	60.03	60.04	60.04
16.2500	60.04	60.04	60.04	60.05	60.05
16.5000	60.05	60.05	60.06	60.06	60.06
16.7500	60.06	60.06	60.07	60.07	60.07
17.0000	60.07	60.07	60.08	60.08	60.08
17.2500	60.08	60.08	60.09	60.09	60.09
17.5000	60.09	60.09	60.09	60.10	60.10
17.7500	60.10	60.10	60.10	60.10	60.10
18.0000	60.11	60.11	60.11	60.11	60.11
18.2500	60.11	60.11	60.11	60.12	60.12
18.5000	60.12	60.12	60.12	60.12	60.12
18.7500	60.12	60.12	60.12	60.12	60.13
19.0000	60.13	60.13	60.13	60.13	60.13
19.2500	60.13	60.13	60.13	60.13	60.13
19.5000	60.13	60.13	60.13	60.13	60.13
19.7500	60.13	60.13	60.14	60.14	60.14
20.0000	60.14	60.14	60.14	60.14	60.14
20.2500	60.14	60.14	60.14	60.14	60.14
20.5000	60.14	60.14	60.14	60.14	60.14
20.7500	60.14	60.14	60.14	60.14	60.14
21.0000	60.14	60.14	60.14	60.14	60.14
21.2500	60.14	60.14	60.14	60.14	60.14
21.5000	60.13	60.13	60.13	60.13	60.13

File.... R:\000 - Timmons Group\22303\Pond\calc\Pond Pack\PPEA SITE INTERCONNECTED POND MODEL.PPW

::
TIME OF CONCENTRATION CALCULATOR
::

Segment #1: Tc: User Defined

Segment #1 Time: .3833 hrs

==========
Total Tc: .3833 hrs
==========

File.... R:\000 - Timmons Group\22303\Pond\calc\Pond Pack\PPEA SITE INTERCONNECTED POND MODEL.PPW

Tc Equations used...

==== User Defined ==========

Tc = Value entered by user

Where: Tc = Time of concentration

File.... R:\000 - Timmons Group\22303\Pond\calc\Pond Pack\PPEA SITE INTERCONNECTED POND MODEL.PPW

::
TIME OF CONCENTRATION CALCULATOR
::

Segment #1: Tc: User Defined

Segment #1 Time: 2.1300 hrs

==========
Total Tc: 2.1300 hrs
==========

File.... R:\000 - Timmons Group\22303\Pond\calc\Pond Pack\PPEA SITE INTERCONNECTED POND MODEL.PPW

Tc Equations used...

==== User Defined ==========

Tc = Value entered by user

Where: Tc = Time of concentration

File.... R:\000 - Timmons Group\22303\Pond\calc\Pond Pack\PPEA SITE INTERCONNECTED POND MODEL.PPW

RUNOFF CURVE NUMBER DATA
::

Soil/Surface Description	CN	Area acres	Impervious Adjustment %C	%UC	Adjusted CN
Shopping Center	96	14.300	18.5?		96.00
Community College	86	52.100			86.00
High School (soccer fields & roads)	88	6.600			88.00
Sports Complex	88	31.800			88.00
State Roads & R/W	92	4.500			92.00
Forested Land	70	41.800			70.00
Existing Pond	100	7.200			100.00
Utility Easement	75	6.400			75.00
Existing Church Site	90	2.500			90.00
Stadium Site	93	12.600			93.00
High School (assumed pre-dev condit	70	16.800			70.00
Existing residential development	77	3.300			77.00
COMPOSITE AREA & WEIGHTED CN --->		199.900			83.04 (83)

::

WEST POND

FINAL ROUTING - DISTRICT PARK WEST POND PC 105

TIMMONS GROUP

YOUR VISION ACHIEVED THROUGH OURS.

WORKSHEET FOR SCS HYDROLOGIC PARAMETERS

Site Conditions:		Existing	**Project:** James City County PPEA Dam
	X	Proposed	**Subarea Number:** D1
Off-Site Land Use:	X	Existing	**By:** M. Claud
		Proposed	**Date:** 3/7/2005

RUNOFF CURVE NUMBER

	Land Use or Zoning		Area (acres)	RCN	RCN x Area
	On-Site	High School (soccer fields & roads)	6.6	88	580.8
	On-Site	Community College	52.1	88	4584.8
	Off-Site	Shopping Center 18.5?	14.3	96	1372.8
	On-Site	Forested Land	41.8	70	2926
	On-Site	Existing Pond	7.2	100	720
	Off-Site	State Roads & R/W	4.5	92	414
	On-Site	Sports Complex	31.8	88	2798.4
	On-Site	Utility Easment	6.4	75	480
	On-Site	Stadium Site	12.6	88	1108.8
	Off-Site	Existing Church Site	2.5	90	225
	On-Site	High School (assume pre-dev conditions)	16.8	70	1176
	Off-Site	Existing residential development	3.3	77	254.1

Total Area 199.9 ac 0.312 sq. mi **Weighted RCN =** 83.2

(80.9 Hectares)

TIME OF CONCENTRATION

ID	Type of Flow	n	Length (ft)	Slope (ft/ft)	Area (sf)	Wet P (ft)	Velocity (fps)	Tc (hrs)
Sheet Flow (P_2= 3.5 in.)								
A	Grass (long)	0.24	100	0.01	$T_t = \frac{0.007\,(nL)^{0.8}}{(P_2)^{0.5}\,S^{0.4}}$			0.30
Shallow Concentrated Flow							Fig. 3.1, TR-55	T_t=L/3600V)
B	Paved		1000	0.010			5	0.06
Channel Flow								T_t=L/3600V)
C	Piped	0.09	5000	0.0100			7.00	0.20
							Total T_c	0.55

TIMMONS GROUP

YOUR VISION ACHIEVED THROUGH OURS.

WORKSHEET FOR SCS HYDROLOGIC PARAMETERS

Site Conditions:		Existing	**Project:** James City County PPEA Dam
	X	Proposed	**Subarea Number:** D2
Off-Site Land Use:	X	Existing	**By:** M. Claud
		Proposed	**Date:** 3/8/2005

RUNOFF CURVE NUMBER

	Land Use or Zoning		Area (acres)	RCN	RCN x Area
	On-Site	Residential - 1/2 acre lots	79.7	80	6376
	On-Site	Residential - 1/3 acre lots	804.5	81	65164.5
	On-Site	Forested Land	74.1	70	5187
	On-Site	Existing Pond	30.2	100	3020
	On-Site	State Roads & R/W	16.6	92	1527.2
	On-Site	Utility Easment	11.9	75	892.5
					0
					0
					0
					0
					0
					0

Total Area 1017.0 ac 1.589 sq. mi **Weighted RCN =** 80.8

(411.6 Hectares)

TIME OF CONCENTRATION

ID	Type of Flow	n	Length (ft)	Slope (ft/ft)	Area (sf)	Wet P (ft)	Velocity (fps)	Tc (hrs)
Sheet Flow (P_2= 3.5 in.)					$T_t = \frac{0.007\,(nL)^{0.8}}{(P_2)^{0.5}\,S^{0.4}}$			
A	Grass (long)	0.24	150	0.013				0.37
Shallow Concentrated Flow						Fig. 3.1, TR-55		T_t=L/3600V)
B	Paved		4950	0.013			2.3	0.60
Channel Flow								T_t=L/3600V)
C		0.09	6500	0.0038	30	16	1.56	1.16
							Total T_c	2.13

==========
JOB TITLE
==========

Project Date: 7/7/2005
Project Engineer: Michael L. Claud, P.E.
Project Title: Warhill Site Western Pond (PC 105) Dam Renovations
Project Comments:
This is the pond routing for the Warhill Site Western Pond (PC 105) Dam Renovations Project

Table of Contents

********** MASTER SUMMARY **********

Watershed..... Master Network Summary 1.01

********** TC CALCULATIONS **********

SUBAREA D1..... Tc Calcs 2.01

SUBAREA D2..... Tc Calcs 2.03

********** CN CALCULATIONS **********

SUBAREA D1..... Runoff CN-Area 3.01

SUBAREA D2..... Runoff CN-Area 3.02

********** TIME VS.ELEV **********

PC105..... 1
Time-Elev 4.01

********** POND VOLUMES **********

PC105..... Vol: Elev-Area 5.01

PC118..... Vol: Elev-Area 5.02

********** OUTLET STRUCTURES **********

Warhill Rd Out.. Outlet Input Data 6.01

Table of Contents (continued)

Composite Rating Curve 6.05

MASTER DESIGN STORM SUMMARY

Network Storm Collection: James City Count

Return Event	Total Depth in	Rainfall Type	RNF ID
1	2.8000	Synthetic Curve	TypeII 24hr
2	3.5000	Synthetic Curve	TypeII 24hr
10	5.5000	Synthetic Curve	TypeII 24hr
100	8.0000	Synthetic Curve	TypeII 24hr

ICPM CALCULATION TOLERANCES

Target Convergence= .000 cfs +/-
Max. Iterations = 35 loops
ICPM Time Step = .0500 hrs
Output Time Step = .0500 hrs
ICPM Ending Time = 150.0000 hrs

MASTER NETWORK SUMMARY
SCS Unit Hydrograph Method

(*Node=Outfall; +Node=Diversion;)
(Trun= HYG Truncation: Blank=None; L=Left; R=Rt; LR=Left&Rt)

Node ID	Type	Return Event	HYG Vol ac-ft	Trun	Qpeak hrs	Qpeak cfs	Max WSEL ft	Max Pond Storage ac-ft
*OUT 20	JCT	1	117.791		19.2000	45.80		
*OUT 20	JCT	2	173.418		18.2000	76.06		
*OUT 20	JCT	10	348.711		15.7000	306.80		
*OUT 20	JCT	100	545.141		14.1500	512.46		
PC105	POND	1	21.440		12.1000	250.16		
PC105	POND	2	30.954		12.1000	365.20		
PC105	POND	10	60.455		12.1000	712.40		
PC105	POND	100	99.555		12.1000	1155.82		

```
-------------------------------
ICPM CALCULATION TOLERANCES
-------------------------------
Target Convergence=      .000 cfs +/-
Max. Iterations    =       35 loops
ICPM   Time Step   =    .0500 hrs
Output Time Step   =    .0500 hrs
ICPM Ending Time   = 150.0000 hrs
-------------------------------
```

MASTER NETWORK SUMMARY
SCS Unit Hydrograph Method

(*Node=Outfall; +Node=Diversion;)
(Trun= HYG Truncation: Blank=None; L=Left; R=Rt; LR=Left&Rt)

PC105 routed

Node ID	Type	Return Event	HYG Vol ac-ft	Trun	Qpeak hrs	Qpeak cfs	Max WSEL ft	Max Pond Storage ac-ft
PC105 OUT	POND	1	19.501		19.9500	5.67	60.14	46.241
PC105 OUT	POND	2	28.860		17.9000	10.90	61.02	52.928
PC105 OUT	POND	10	58.339		12.8000	103.38	62.16	63.281
PC105 OUT	POND	100	97.430		12.6000	280.35	63.83 DHW	81.064
PC118	POND	1	117.959		13.3500	344.13		
PC118	POND	2	173.660		13.3500	516.88		
PC118	POND	10	349.123		13.2000	1138.76		
PC118	POND	100	584.087		13.1000	1959.57		
PC118 OUT	POND	1	117.791		19.2000	45.80	46.19	115.835
PC118 OUT	POND	2	173.418		18.2000	76.06	47.00	145.620
PC118 OUT	POND	10	348.711		15.7000	306.80	49.32	229.724
PC118 OUT	POND	100	545.141		14.1500	512.46	51.00	309.050
SUBAREA D1	AREA	1	21.440		12.1000	250.16		
SUBAREA D1	AREA	2	30.954		12.1000	365.20		
SUBAREA D1	AREA	10	60.455		12.1000	712.40		
SUBAREA D1	AREA	100	99.555		12.1000	1155.82		
SUBAREA D2	AREA	1	98.457		13.3500	339.67		
SUBAREA D2	AREA	2	144.800		13.3500	510.16		
SUBAREA D2	AREA	10	290.784		13.3000	1038.36		
SUBAREA D2	AREA	100	486.656		13.1000	1738.51		

Scott Thomas

From: Scott Thomas

Sent: Tuesday, November 01, 2005 2:19 PM

To: Andrew Gould (andrew.gould@timmons.com); 'michael.claud@timmons.com'; 'Bill Richards'

Cc: Wayland Bass; Steven W. Hicks; Matthew Arcieri

Subject: Warhill PPEA: Revisions to Forebay & West Pond Dam

Our Division has reviewed two cut sheets as provided by Timmons at the Halloween Oct 31, 2005 Warhill PPEA Standing Team meeting. The two submittals were as follows:

1) Revised Detail for Paved Channel Upstream of Forebay (transmittal dated 10/31/05)
2) Revised Inlet Box Structure for the Western Pond Dam (email dated 10/28/05)

Our Division has no comments on the transmittals as forwarded; however, I thought I had made it clear at the PPEA meeting of October 17, 2005 that the process involved was to revise the applicable approved plan sheet(s) and that these changes would not just be covered on asbuilts. It is our intent to keep the approved plans as up to date as possible, especially since the forebay and west pond dam are subject to other regulatory permits (ie. wetland, dam safety, etc.) Based on my records, it would appear the following drawings need revised and two (2) sets forwarded to Matt Arcieri, Planning for insertion into the approved plan set.

Forebay/Channel (per # 1 above): Sheets C3.0, C9.1 and C9.2 from approved plan SP-57-05/SP-59-05.

West Pond Dam (per # 2 above): Sheets C-1.5 and C-1.6 from approved plan SP-82-05.

Scott J. Thomas, P.E.
James City County
Environmental Division

Andrew Gould

From: Mike Claud
Sent: Friday, October 28, 2005 8:06 AM
To: rnice@gniceandsons.com
Cc: Andrew Gould
Subject: Warhill Site Western Pond Dam
Attachments: Revised Inlet Structure 10-28-2005.pdf

Ray,

Attached is a file containing 3 drawings for the revised inlet box structure. We have moved the box back into the slope 6 as you requested. We are proposing to construct wingwalls off of the box culvert head wall to contain the slopes around the inlet box. The box culvert is now shown as 34 feet. Please review and let me know if you have any questions or concerns. If you are satisfied with this revision, we will submit the changes to the County for their approval.

thanks,

Michael L. Claud, P.E.
Timmons Group
YOUR VISION ACHIEVED THROUGH OURS
1001 Boulders Parkway, Suite 300
Richmond, Virginia 23225
Phone: (804) 200-6413
Fax: (804) 560-1438
Email: mike.claud@timmons.com
Web: www.timmons.com

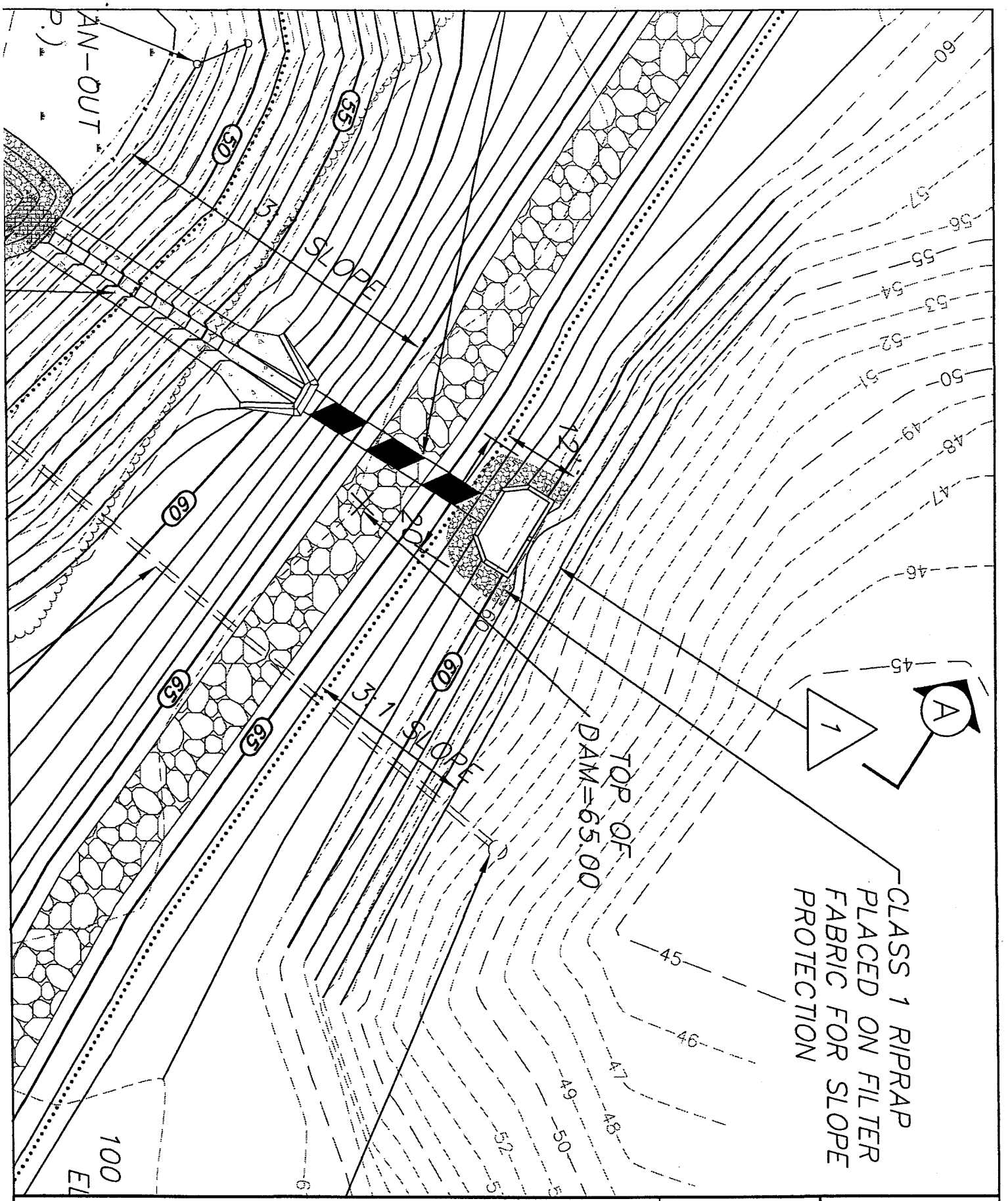

TIMMONS GROUP

YOUR VISION ACHIEVED THROUGH OURS.

THIS DRAWING PREPARED AT THE CORPORATE OFFICE
1001 Boulders Parkway, Suite 300 | Richmond, VA 23225
TEL 804.200.6500 FAX 804.560.1016 www.timmons.com

Site Development | Residential | Infrastructure | Technology

REV-1	SHEET NO.	22303	JOB NO.	1"=20'	SCALE	CHECKED BY	DESIGNED BY M. CLAUD	DRAWN BY 10/28/2005 DATE

WARHILL SITE WESTERN POND (PC105) DAM RENOVATIONS

JAMES CITY COUNTY, VIRGINIA

REVISED INLET BOX PLAN LAYOUT

DATE	REVISION DESCRIPTION

These plans and associated documents are the exclusive property of TIMMONS GROUP and may not be reproduced in whole or in part and shall not be used for any purpose whatsoever, inclusive, but not limited to construction, bidding, and/or construction staking without the express written consent of TIMMONS GROUP.

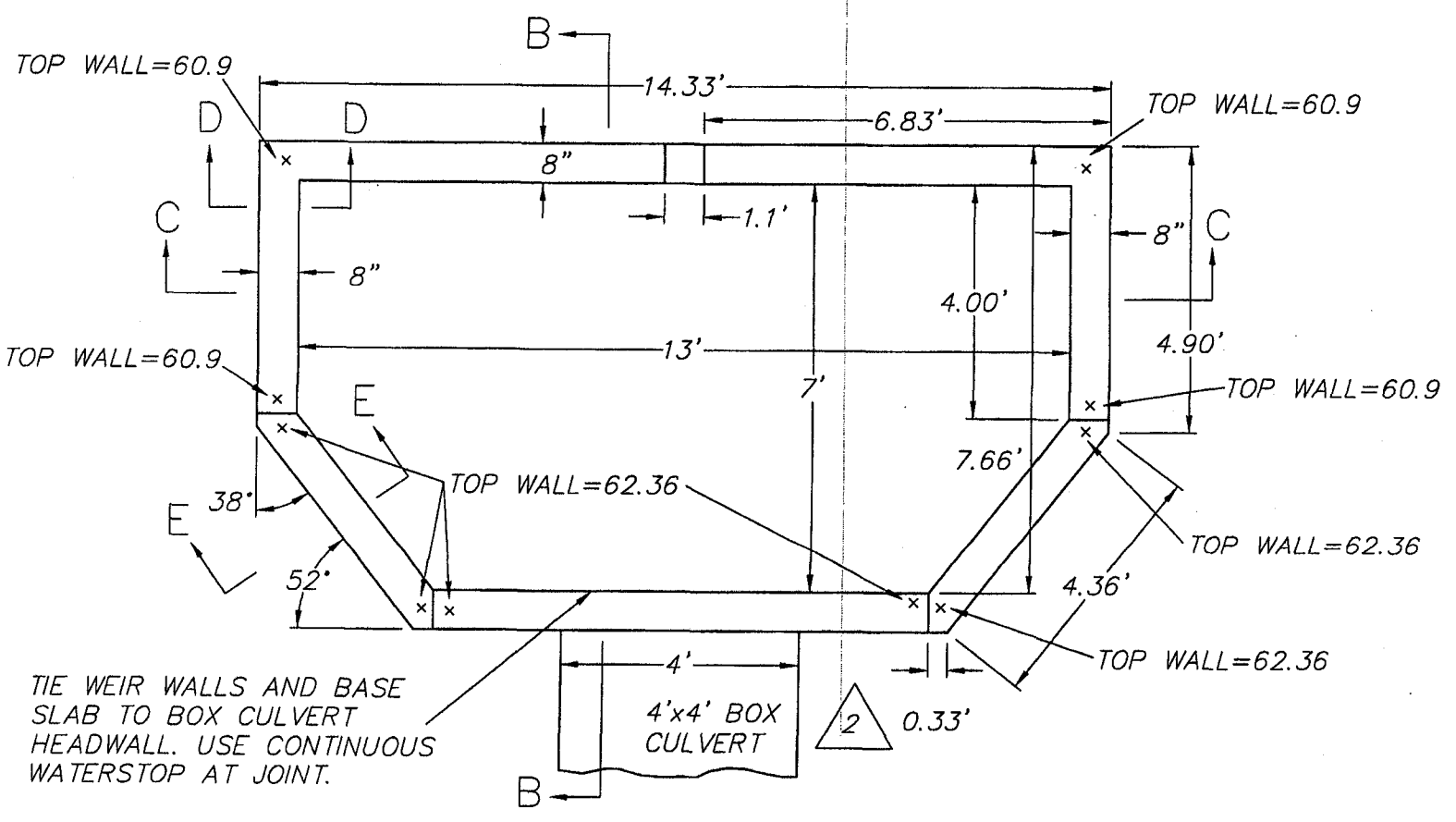

PRINCIPAL SPILLWAY PLAN

NO SCALE

THIS DRAWING PREPARED AT THE CORPORATE OFFICE
1001 Boulders Parkway, Suite 300 | Richmond, VA 23225
TEL 804.200.6500 FAX 804.560.1016 www.timmons.com

YOUR VISION ACHIEVED THROUGH OURS.

Site Development | Residential | Infrastructure | Technology

REVISION DESCRIPTION	DATE

DATE 10/28/2005
DRAWN BY M. CLAUD
DESIGNED BY
CHECKED BY
SCALE NONE

TIMMONS GROUP

WARHILL SITE WESTERN POND (PC105) DAM RENOVATIONS
JAMES CITY COUNTY, VIRGINIA
REVISED INLET BOX DETAIL

JOB NO. 22303
SHEET NO. REV-2

These plans and associated documents are the exclusive property of TIMMONS GROUP and may not be reproduced in whole or in part and shall not be used for any purpose whatsoever, inclusive, but not limited to construction, bidding, and/or construction staking without the express written consent of TIMMONS GROUP.

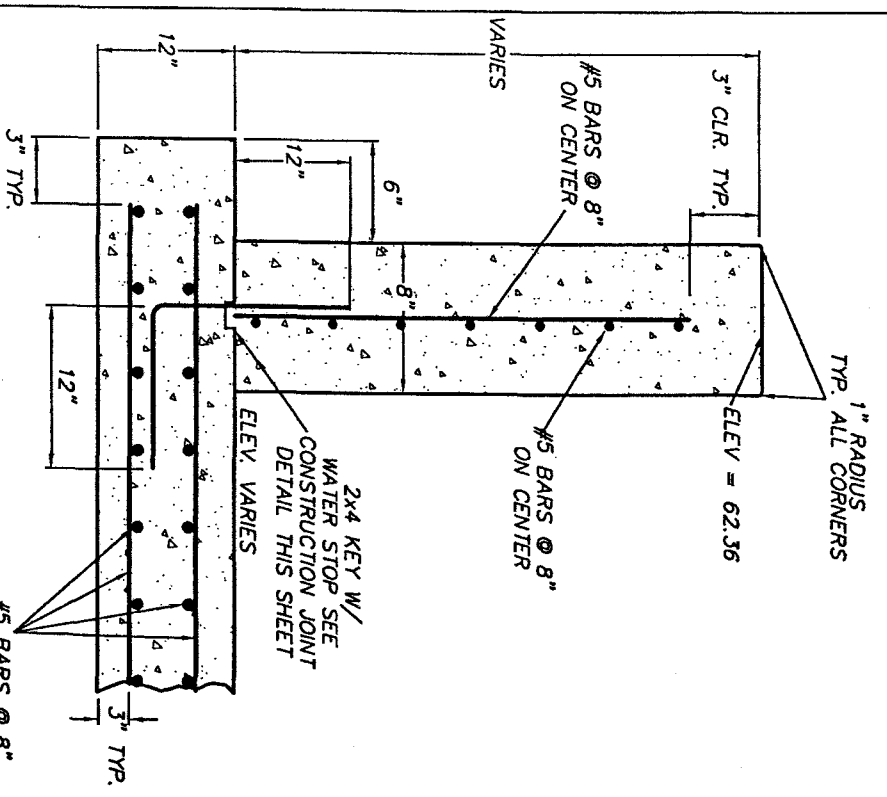

SECTION E-E WEIR WALL
NOT TO SCALE

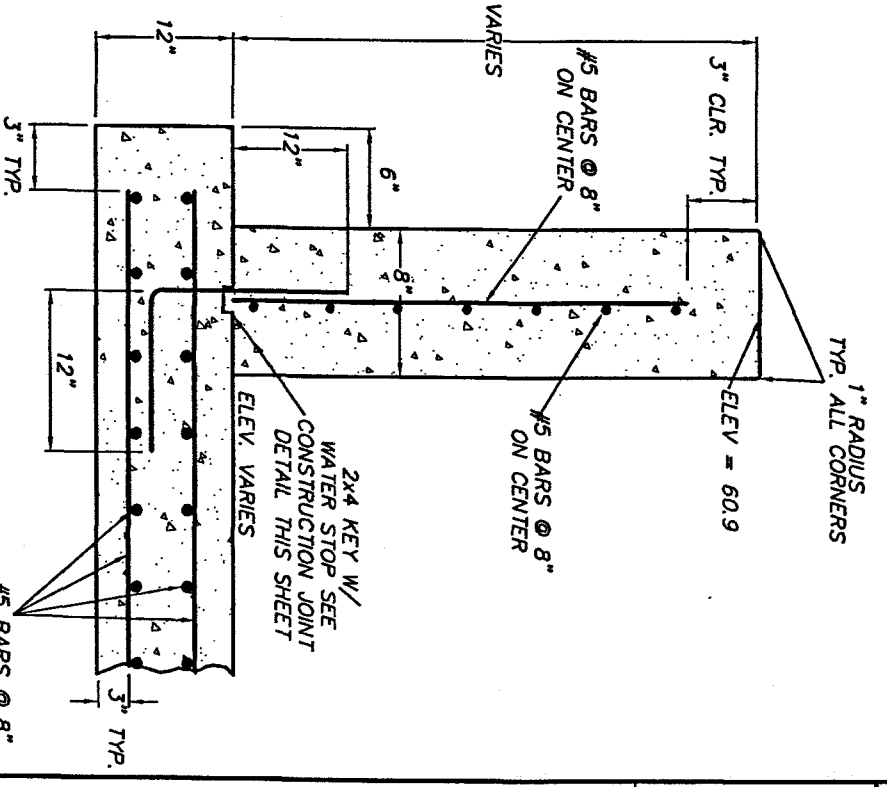

SECTION D-D WEIR WALL
NOT TO SCALE

TIMMONS GROUP

YOUR VISION ACHIEVED THROUGH OURS.

THIS DRAWING PREPARED AT THE CORPORATE OFFICE
1001 Boulders Parkway, Suite 300 | Richmond, VA 23225
TEL 804.200.6500 FAX 804.560.1016 www.timmons.com

Site Development | Residential | Infrastructure | Technology

REV-3	SHEET NO.	22303	JOB NO.	NONE	SCALE	CHECKED BY	DESIGNED BY M. CLAUD	DRAWN BY 10/28/2005	DATE

WARHILL SITE WESTERN POND (PC105) DAM RENOVATIONS
JAMES CITY COUNTY, VIRGINIA
REVISED INLET BOX DETAILS

DATE	REVISION DESCRIPTION

These plans and associated documents are the exclusive property of TIMMONS GROUP and may not be reproduced in whole or in part and shall not be used for any purpose whatsoever, inclusive, but not limited to construction, bidding, and/or construction staking without the express written consent of TIMMONS GROUP.

GEOTECH REPORT TOE DRAIN - FABRIC ISSUE REVIEWED BY SJT 9-15-05

TIMMONS GROUP

YOUR VISION ACHIEVED THROUGH OURS.

MEMORANDUM

TO:	Andrew Gould, P.E
FROM:	Mike Hall, P.E.
DATE:	August 25, 2005
RE:	**District Park West Pond Dam (PC 105), James City County Warhill Tract**

STABILITY

As requested, I have taken a look at the back slope of the western pond dam and modeled the stability of the slope under rapid drawdown conditions. The way I have approached this problem is as follows:

1. The water levels measured in the two borings that were drilled through the crest of the dam was assumed to correspond to the upper seepage line when the water level behind the dam was at EL. 58.20 (normal WSE).
2. Then, a similar seepage line was projected upward to correspond to what might occur when the water behind the dam is at EL. 63.81 (100-year WSE). It was this water level that was assumed in the rapid drawdown model. This is likely a conservative assumption, because the drawdown, while assumed to be instantaneous, will take some time, and the soil may drain almost as quickly.
3. Two soil types were modeled. Soil above EL. 50 was modeled as an SM (φ=28° and c=0) and the soil below EL. 50 was modeled as an SM/SC (φ=28° and c=50 psf). Below EL. 40, a third soil type (another SM) could have been assumed; however, the failure surface does not seem to reach that layer, so it was ignored.

   A graph of the results is provided on the following page.

<u>The factor of safety seems to be about 1.1.</u> Although close to unity, I'm not too concerned, mainly because I have made what I consider to be conservative assumptions.

TOE DRAIN

Based on a very good reference (Geosynthetic Design & Construction Guidelines, FHWA, March 1995), the geotextile (Mirafi 140N Filter Fabric) proposed for the toe drains should satisfy a couple of conditions:

1. <u>Retention Criterion</u> (for steady state flow, which we almost surely will have):

   $AOS \leq (B)*(D_{85\ soil})$

where: AOS = Apparent Opening Size of the fabric (0.212 mm for Mirafi 140N), and B ranges from 0.5 to 2.0 and is a function of the uniformity coefficient C_u of the soil being retained

2. <u>Clogging Resistance Criterion</u> (For Cu > 3):

$$AOS \geq (3)*(D_{15\ soil})$$

If Cu ≤ 3, select a geotextile with the maximum AOS value from the equation given for Retention Criterion. There are some other qualifiers that this reference gives with respect to clogging resistance, when clogging is a possibility.

What needs to be kept in mind, and this reference discusses this issue, is that the level of severity (or criticality) of the application needs to be kept in mind. In other words, if fabric is not well suited for the conditions, and it fails (say it clogs), is it a big problem? I tend to think the answer to that question in this case is probably "no."

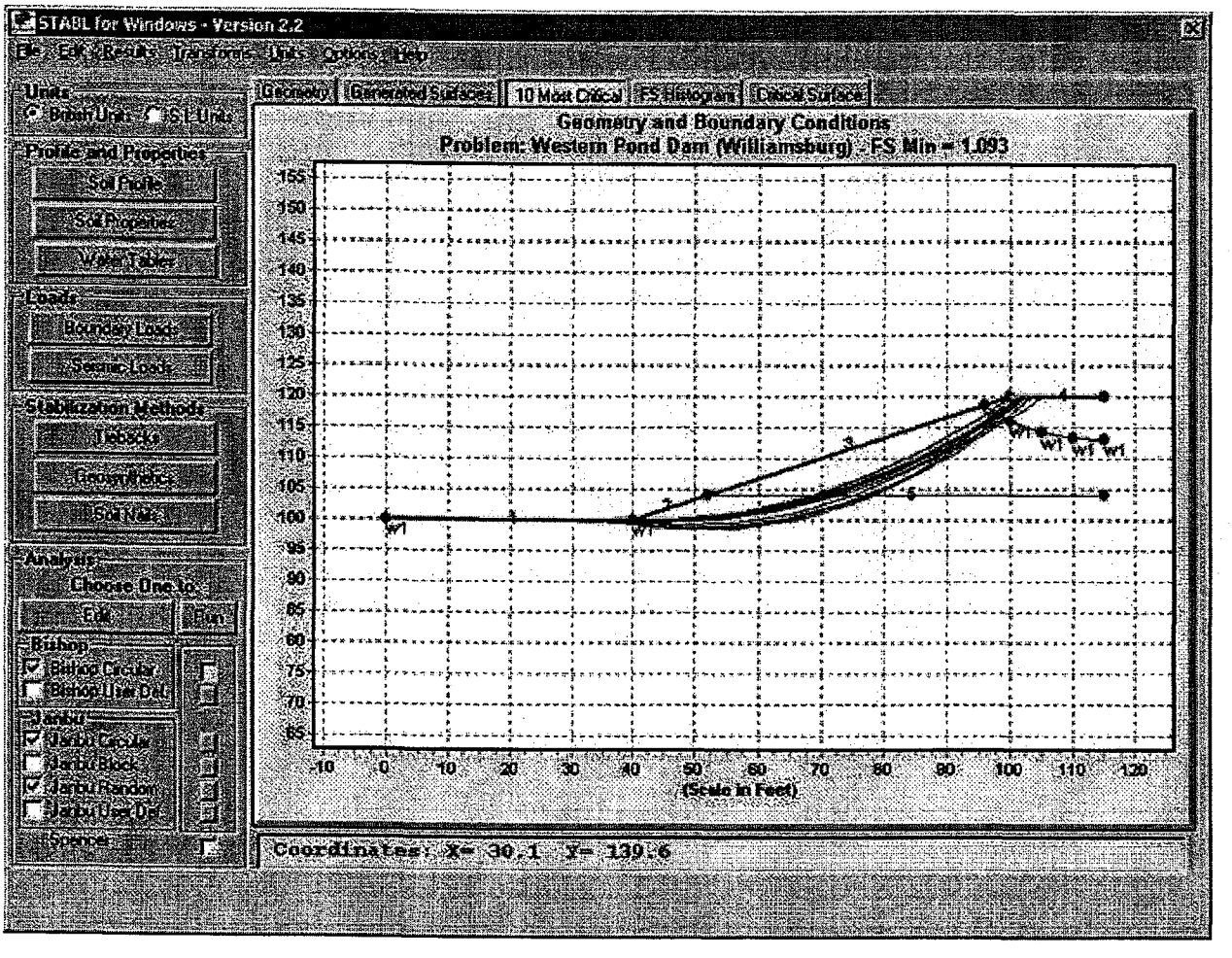

Figure 1

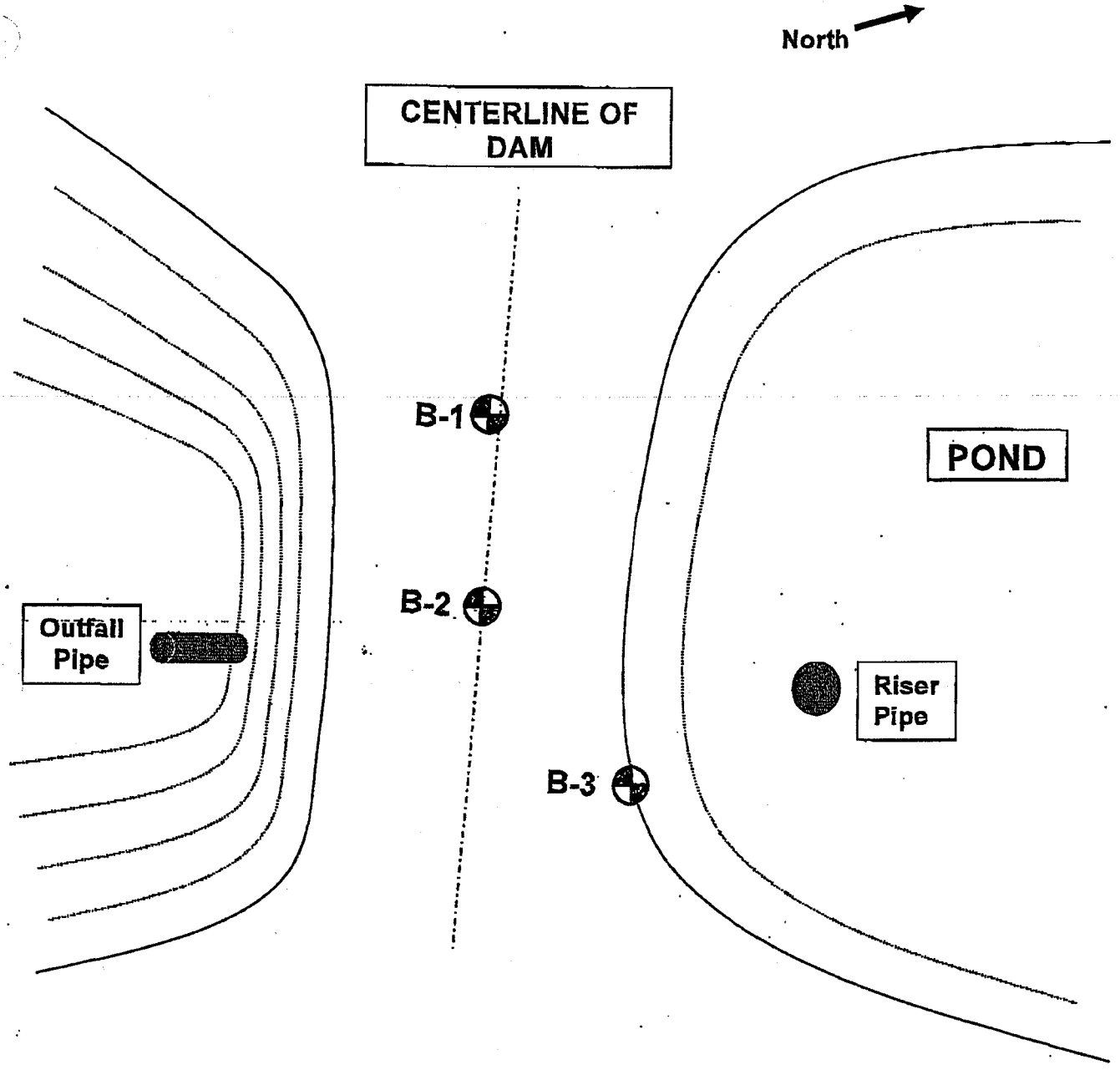

Locations are approximate

BORING LOCATION PLAN

PROJECT:	Dam Alignment – JCC Sports District Sports Complex James City County, Virginia	SCALE: NTS
PROJECT NO:	WM05-135G	DATE: 3/11/05
CLIENT:	Timmons Group	PLOT BY: JW

Geotechnical Environmental Testing Solutions, Inc.

LOG OF BORING No. B-1

PROJECT: Dam Alignment - JCC District Park Sports Complex **PROJECT NO.:** WM05-135G
CLIENT: Timmons Group
PROJECT LOCATION: James City County, Virginia
LOCATION: See Attached Boring Location Plan **ELEVATION:**
DRILLER: GET Solutions, Inc. **LOGGED BY:** S Peterson
DRILLING METHOD: Hollow Stem Augering **DATE:** 03-09-05
DEPTH TO - WATER> INITIAL: ∇ 12 **AFTER 24 HOURS:** ∇ **CAVING>** ⊥

Depth (feet)	Description	Graphic	Sample No.	Blow Counts	% < #200	TEST RESULTS (Plastic Limit ⊢—⊣ Liquid Limit; Water Content - ●; Penetration - ▨; 10 20 30 40 50 60 70)
0						
	6 inches of topsoil					
	0.5 Brown, moist, Silty, fine to medium SAND (SM), Very Loose		1	1 1 1		
	3 Dark brown/brown, moist, Silty, fine to medium SAND (SM) with trace organics, Very Loose		2	0 0 2		
5			3	1 2 3		
	6 Orangish brown, moist to wet, Silty, Clayey, fine to medium SAND (SM), Very Loose		4	2 2 2		
			5	2 2 3		
10	∇					
	13 Orangish brown, wet, Silty, Clayey, fine to medium SAND (SM-SC) with trace Clay and organics, Very Loose		6	1 1 3		
15						
	19 Gray, wet, Silty, fine to medium SAND (SM), Loose		7	3 4 3		
20						
	Marine shell fragments at 23 to 25 Feet		8	5 4 4		
25	Boring terminated at 25 ft.					
30						
35						

This information pertains only to this boring and would not be interpreted as being indicitive of the site.

Geotechnical Environmental Testing Solutions, Inc.

LOG OF BORING No. B-2

PROJECT: Dam Alignment - JCC District Park Sports Complex **PROJECT NO.:** WM05-135G
CLIENT: Timmons Group
PROJECT LOCATION: James City County, Virginia
LOCATION: See Attached Boring Location Plan **ELEVATION:**
DRILLER: GET Solutions, Inc. **LOGGED BY:** S Peterson
DRILLING METHOD: Hollow Stem Augering **DATE:** 03-09-05
DEPTH TO - WATER> INITIAL: ▽ 12 **AFTER 24 HOURS:** ▽ **CAVING>** ⊥

Depth (feet)	Description	Graphic	Sample No.	Blow Counts	% < #200	TEST RESULTS (Plastic Limit ⊢—⊣ Liquid Limit; Water Content - ●; Penetration - ▨; 10 20 30 40 50 60 70)
0	Orangish brown, moist, Silty, fine to medium SAND (SM), Very Loose		1	0 1 1		
2	Dark brown, moist, Silty, fine to medium SAND (SM) with trace organics, Very Loose		2	1 1 2		
5			3	2 1 3		
6	Orangish brown, moist, Silty, fine to medium SAND (SM), Very Loose		4	2 3 2		
8	Orangish brown, moist to wet, Silty, Clayey SAND (SM-SC), Very Loose to Loose		5	2 3 3		
10						
13			6	1 2 3		
19.5	Gray, wet, Silty, fine to medium SAND (SM), Loose		7	3 4 4		
20	Marine shell fragments at 23 to 25 Feet		8	4 5 4		
25	Boring terminated at 25 ft.					
30						
35						

This information pertains only to this boring and would not be interpreted as being indicitive of the site.

Geotechnical Environmental Testing Solutions, Inc.

LOG OF BORING No. B-3

PROJECT: Dam Alignment - JCC District Park Sports Complex **PROJECT NO.:** WM05-135G
CLIENT: Timmons Group
PROJECT LOCATION: James City County, Virginia
LOCATION: See Attached Boring Location Plan **ELEVATION:**
DRILLER: GET Solutions, Inc. **LOGGED BY:** S Peterson
DRILLING METHOD: Hollow Stem Augering **DATE:** 03-09-05
DEPTH TO - WATER> INITIAL: ▽ 9 **AFTER 24 HOURS:** ▽ **CAVING>** C

Depth (feet)	Description	Graphic	Sample No.	Blow Counts	% < #200
0	Orangish brown, moist, Silty, Clayey, fine to medium SAND (SM-SC), Very Loose		1	2 2 3	
2	Orangish brown, moist, Clayey SAND (SC), Very Loose to Loose		2	2 2 2	
5			3	2 3 4	
6	Brown, moist to wet, Silty, fine to medium SAND (SM), Loose to Medium Dense		4	2 3 4	
▽ 10			5	7 6 7	
13	Brown, wet, CLAY (CL), with little Sand and trace organics, Soft		6	2 2 2	
15					
18	Gray, wet, Silty, fine to medium SAND (SM), Very Loose		7	1 1 1	
20	Boring terminated at 20 ft.				
25					
30					
35					

TEST RESULTS
Plastic Limit ├──┤ Liquid Limit
Water Content - ●
Penetration - ▨
10 20 30 40 50 60 70

This information pertains only to this boring and would not be interpreted as being indicitive of the site.

Figure

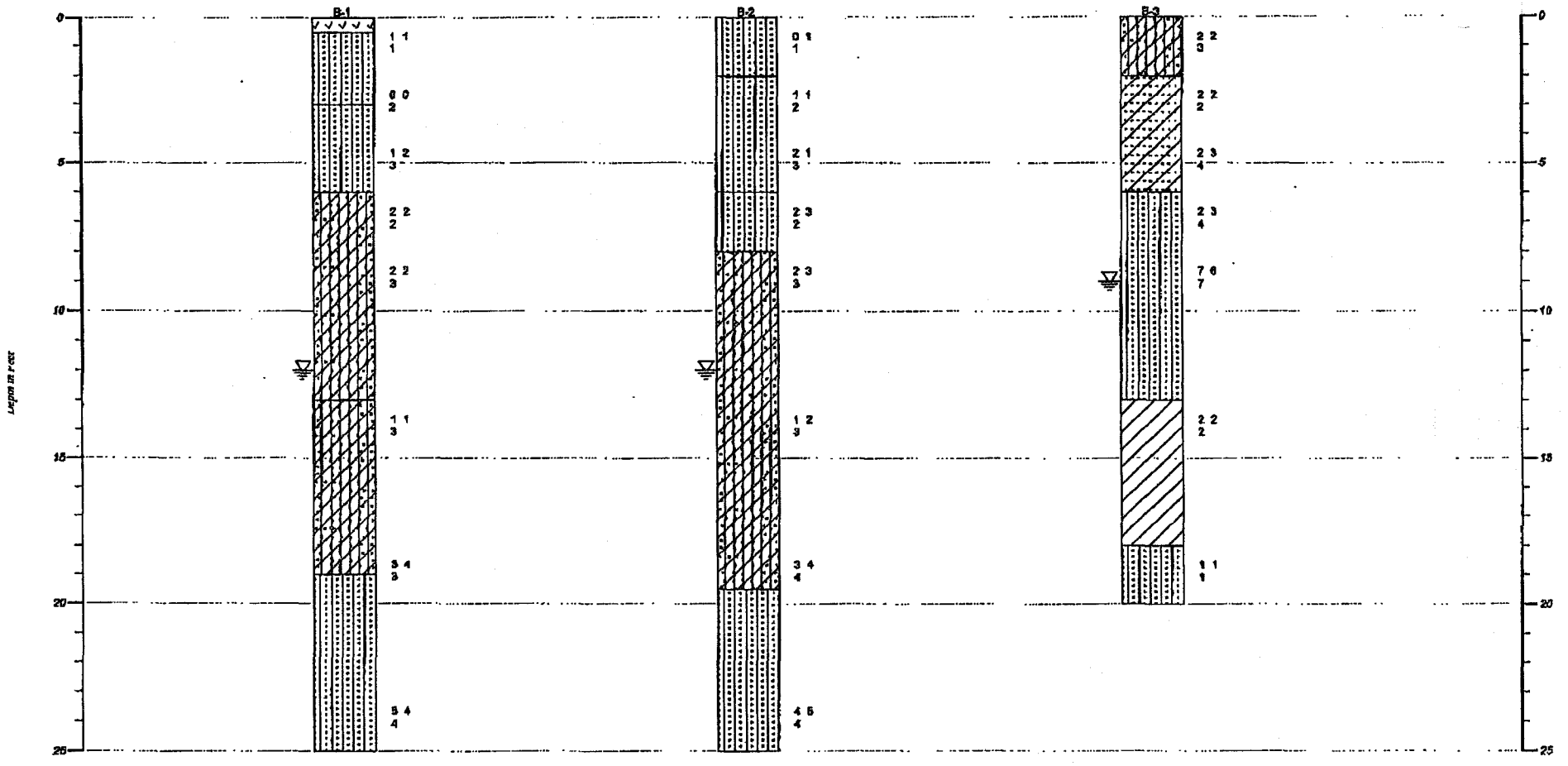

Strata symbols

- Topsoil
- Silty sand
- Poorly graded clayey silty sand
- Clayey sand
- Low plasticity clay

GET Solutions, Inc. GENERALIZED SOIL PROFILE		
HORIZONTAL SCALE: VERTICAL SCALE: 1"=1'	DRAWN BY/APPROVED BY S Peterson	DATE DRAWN 3/11/2005
Dam Alignment - JCC District Park Sports Complex James City County, Virginia		
PROJECT NO. WM05-135G		FIGURE NUMBER 1

Scott Thomas

From: Scott Thomas
Sent: Tuesday, August 02, 2005 3:28 PM
To: 'Andrew Gould'
Cc: Wayland Bass
Subject: RE: draw down calcs for District Park west dam

SCP ✓
. Prelim. Comps.
. See Final Comps.

I believe this shows that the West Pond PC 105 design will comply with the County's stream channel protection requirements. The weir slot gives variable drawdown based on head. If a 1-year storm hits and fills to the level shown by design WSEL's, the first foot or so drawdown will occurring in about ~~5 or 6~~ 15 hours and the next foot of drawdown will take about 75 hours until the pond level is back to permanent pool.

Scott J. Thomas, P.E.
James City County
Environmental Division

-----Original Message-----
From: Andrew Gould [mailto:Andrew.Gould@timmons.com]
Sent: Tuesday, August 02, 2005 2:48 PM
To: Scott Thomas
Cc: Mike Claud
Subject: draw down calcs for District Park west dam
Importance: High

Scott - As we discussed, here is the draw down routing for the west dam outlet structure. I have marked the time of the peak 1 year WSE and then 48 hours after the peak.

Please review and let me know if this is acceptable to you.

We will be resubmitting revised plans and calcs addressing all other comments on Monday.

Thanks for your help with this.

Drew

TIMMONS GROUP
YOUR VISION ACHIEVED THROUGH OURS.
Drew Gould, P.E.
1001 Boulders Parkway
Suite 300
Richmond, VA 23225
Tel: 804.200.6412
Fax: 804.560.1438
Cell: 804.334.9284
E-mail: andrew.gould@timmons.com
www.timmons.com

-----Original Message-----
From: timmons [mailto:dt-canon@timmons.com]
Sent: Tuesday, August 02, 2005 2:46 PM
To: Andrew Gould
Subject: Attached Image
Importance: High

Scott Thomas

From: Andrew Gould [Andrew.Gould@timmons.com]
Sent: Tuesday, August 02, 2005 2:48 PM
To: Scott Thomas
Cc: Mike Claud
Subject: draw down calcs for District Park west dam
Importance: High

PC 105 WEST POND SCPV

Scott - As we discussed, here is the draw down routing for the west dam outlet structure. I have marked the time of the peak 1 year WSE and then 48 hours after the peak.

Please review and let me know if this is acceptable to you.

We will be resubmitting revised plans and calcs addressing all other comments on Monday.

Thanks for your help with this.

Drew

TIMMONS GROUP
YOUR VISION ACHIEVED THROUGH OURS.
Drew Gould, P.E.
1001 Boulders Parkway
Suite 300
Richmond, VA 23225
Tel: 804.200.6412
Fax: 804.560.1438
Cell: 804.334.9284
E-mail: andrew.gould@timmons.com
www.timmons.com

-----Original Message-----
From: timmons [mailto:dt-canon@timmons.com]
Sent: Tuesday, August 02, 2005 2:46 PM
To: Andrew Gould
Subject: Attached Image
Importance: High

START 10

START PEAK 60.14 21.5 4.75 hrs

15.0 hrs 60 26.25 10.25 hrs

59.5 36.5

59.0 53.0 35.25 hrs

77 hrs. 58.5 88.25 41.75

58.3 130.00

60.14
58.2
1.94' slot

TIME vs. ELEVATION (ft)

Output Time increment = .0500 hrs
Time on left represents time for first value in each row.

Time hrs					
.0000	58.00	58.00	58.00	58.00	58.00
.2500	58.00	58.00	58.00	58.00	58.00
.5000	58.00	58.00	58.00	58.00	58.00
.7500	58.00	58.00	58.00	58.00	58.00
1.0000	58.00	58.00	58.00	58.00	58.00
1.2500	58.00	58.00	58.00	58.00	58.00
1.5000	58.00	58.00	58.00	58.00	58.00
1.7500	58.00	58.00	58.00	58.00	58.00
2.0000	58.00	58.00	58.00	58.00	58.00
2.2500	58.00	58.00	58.00	58.00	58.00
2.5000	58.00	58.00	58.00	58.00	58.00
2.7500	58.00	58.00	58.00	58.00	58.00
3.0000	58.00	58.00	58.00	58.00	58.00
3.2500	58.00	58.00	58.00	58.00	58.00
3.5000	58.00	58.00	58.00	58.00	58.00
3.7500	58.00	58.00	58.00	58.00	58.00
4.0000	58.00	58.00	58.00	58.00	58.00
4.2500	58.00	58.00	58.00	58.00	58.00
4.5000	58.00	58.00	58.00	58.00	58.00
4.7500	58.00	58.00	58.00	58.00	58.00
5.0000	58.00	58.00	58.00	58.00	58.00
5.2500	58.00	58.00	58.00	58.00	58.00
5.5000	58.00	58.00	58.00	58.00	58.00
5.7500	58.00	58.00	58.00	58.00	58.00
6.0000	58.00	58.00	58.00	58.00	58.00
6.2500	58.00	58.00	58.00	58.00	58.00
6.5000	58.00	58.00	58.00	58.00	58.00
6.7500	58.00	58.00	58.00	58.00	58.00
7.0000	58.00	58.00	58.00	58.00	58.00
7.2500	58.00	58.00	58.00	58.00	58.00
7.5000	58.00	58.00	58.00	58.00	58.00
7.7500	58.00	58.00	58.00	58.00	58.00
8.0000	58.00	58.00	58.00	58.00	58.00
8.2500	58.00	58.00	58.00	58.00	58.00
8.5000	58.00	58.00	58.00	58.00	58.00
8.7500	58.00	58.00	58.00	58.00	58.00
9.0000	58.00	58.00	58.00	58.00	58.00
9.2500	58.00	58.00	58.00	58.00	58.00
9.5000	58.00	58.00	58.00	58.00	58.00
9.7500	58.00	58.00	58.00	58.00	58.00
10.0000	58.00	58.01	58.01	58.01	58.01
10.2500	58.01	58.01	58.01	58.01	58.01
10.5000	58.02	58.02	58.02	58.02	58.02

TIME vs. ELEVATION (ft)

Output Time increment = .0500 hrs
Time on left represents time for first value in each row.

Time hrs					
10.7500	58.02	58.03	58.03	58.03	58.03
11.0000	58.04	58.04	58.04	58.05	58.05
11.2500	58.06	58.06	58.07	58.07	58.08
11.5000	58.08	58.09	58.10	58.11	58.12
11.7500	58.14	58.16	58.20	58.25	58.32
12.0000	58.41	58.52	58.65	58.79	58.92
12.2500	59.03	59.13	59.21	59.28	59.34
12.5000	59.39	59.43	59.46	59.50	59.52
12.7500	59.55	59.57	59.59	59.61	59.63
13.0000	59.64	59.66	59.67	59.68	59.70
13.2500	59.71	59.72	59.73	59.74	59.75
13.5000	59.76	59.77	59.78	59.79	59.80
13.7500	59.81	59.82	59.82	59.83	59.84
14.0000	59.85	59.85	59.86	59.87	59.87
14.2500	59.88	59.88	59.89	59.89	59.90
14.5000	59.91	59.91	59.92	59.92	59.93
14.7500	59.93	59.94	59.94	59.95	59.95
15.0000	59.95	59.96	59.96	59.97	59.97
15.2500	59.98	59.98	59.98	59.99	59.99
15.5000	59.99	60.00	60.00	60.01	60.01
15.7500	60.01	60.02	60.02	60.02	60.02
16.0000	60.03	60.03	60.03	60.04	60.04
16.2500	60.04	60.04	60.04	60.05	60.05
16.5000	60.05	60.05	60.06	60.06	60.06
16.7500	60.06	60.06	60.07	60.07	60.07
17.0000	60.07	60.07	60.08	60.08	60.08
17.2500	60.08	60.08	60.09	60.09	60.09
17.5000	60.09	60.09	60.09	60.10	60.10
17.7500	60.10	60.10	60.10	60.10	60.10
18.0000	60.11	60.11	60.11	60.11	60.11
18.2500	60.11	60.11	60.11	60.12	60.12
18.5000	60.12	60.12	60.12	60.12	60.12
18.7500	60.12	60.12	60.12	60.12	60.13
19.0000	60.13	60.13	60.13	60.13	60.13
19.2500	60.13	60.13	60.13	60.13	60.13
19.5000	60.13	60.13	60.13	60.13	60.13
19.7500	60.13	60.13	60.14	60.14	60.14
20.0000	60.14	60.14	60.14	60.14	60.14
20.2500	60.14	60.14	60.14	60.14	60.14
20.5000	60.14	60.14	60.14	60.14	60.14
20.7500	60.14	60.14	60.14	60.14	60.14
21.0000	60.14	60.14	60.14	60.14	[illegible]
[illegible]	60.14	60.14	60.14	60.14	60.14
[illegible]1.5000	60.13	60.13	60.13	60.13	[illegible]

Peak W.S.E.

TIME vs. ELEVATION (ft)

Output Time increment = .0500 hrs
Time on left represents time for first value in each row.

Time hrs					
21.7500	60.13	60.13	60.13	60.13	60.13
22.0000	60.13	60.13	60.13	60.13	60.13
22.2500	60.13	60.13	60.13	60.13	60.13
22.5000	60.13	60.13	60.13	60.13	60.13
22.7500	60.13	60.13	60.13	60.13	60.13
23.0000	60.13	60.13	60.13	60.13	60.13
23.2500	60.13	60.13	60.13	60.13	60.13
23.5000	60.13	60.13	60.13	60.12	60.12
23.7500	60.12	60.12	60.12	60.12	60.12
24.0000	60.12	60.12	60.12	60.12	60.12
24.2500	60.12	60.12	60.11	60.11	60.11
24.5000	60.11	60.10	60.10	60.10	60.10
24.7500	60.09	60.09	60.09	60.08	60.08
25.0000	60.08	60.07	60.07	60.07	60.07
25.2500	60.06	60.06	60.06	60.05	60.05
25.5000	60.05	60.04	60.04	60.04	60.04
25.7500	60.03	60.03	60.03	60.02	60.02
26.0000	60.02	60.02	60.01	60.01	60.01
26.2500	60.00	60.00	60.00	59.99	59.99
26.5000	59.99	59.99	59.98	59.98	59.98
26.7500	59.97	59.97	59.97	59.97	59.96
27.0000	59.96	59.96	59.95	59.95	59.95
27.2500	59.95	59.94	59.94	59.94	59.94
27.5000	59.93	59.93	59.93	59.92	59.92
27.7500	59.92	59.92	59.91	59.91	59.91
28.0000	59.90	59.90	59.90	59.90	59.89
28.2500	59.89	59.89	59.89	59.88	59.88
28.5000	59.88	59.87	59.87	59.87	59.87
28.7500	59.86	59.86	59.86	59.86	59.85
29.0000	59.85	59.85	59.85	59.84	59.84
29.2500	59.84	59.83	59.83	59.83	59.83
29.5000	59.82	59.82	59.82	59.82	59.81
29.7500	59.81	59.81	59.81	59.80	59.80
30.0000	59.80	59.80	59.79	59.79	59.79
30.2500	59.79	59.78	59.78	59.78	59.78
30.5000	59.77	59.77	59.77	59.77	59.76
30.7500	59.76	59.76	59.76	59.75	59.75
31.0000	59.75	59.75	59.74	59.74	59.74
31.2500	59.74	59.73	59.73	59.73	59.73
31.5000	59.72	59.72	59.72	59.72	59.71
31.7500	59.71	59.71	59.71	59.71	59.70
32.0000	59.70	59.70	59.70	59.69	59.69
32.2500	59.69	59.69	59.68	59.68	59.68
32.5000	59.68	59.67	59.67	59.67	59.67

TIME vs. ELEVATION (ft)

Output Time increment = .0500 hrs
Time on left represents time for first value in each row.

Time hrs					
32.7500	59.67	59.66	59.66	59.66	59.66
33.0000	59.65	59.65	59.65	59.65	59.64
33.2500	59.64	59.64	59.64	59.64	59.63
33.5000	59.63	59.63	59.63	59.62	59.62
33.7500	59.62	59.62	59.62	59.61	59.61
34.0000	59.61	59.61	59.60	59.60	59.60
34.2500	59.60	59.60	59.59	59.59	59.59
34.5000	59.59	59.58	59.58	59.58	59.58
34.7500	59.58	59.57	59.57	59.57	59.57
35.0000	59.57	59.56	59.56	59.56	59.56
35.2500	59.56	59.55	59.55	59.55	59.55
35.5000	59.54	59.54	59.54	59.54	59.54
35.7500	59.53	59.53	59.53	59.53	59.53
36.0000	59.52	59.52	59.52	59.52	59.52
36.2500	59.51	59.51	59.51	59.51	59.51
36.5000	59.50	59.50	59.50	59.50	59.50
36.7500	59.49	59.49	59.49	59.49	59.49
37.0000	59.48	59.48	59.48	59.48	59.48
37.2500	59.47	59.47	59.47	59.47	59.47
37.5000	59.46	59.46	59.46	59.46	59.46
37.7500	59.45	59.45	59.45	59.45	59.45
38.0000	59.44	59.44	59.44	59.44	59.44
38.2500	59.44	59.43	59.43	59.43	59.43
38.5000	59.43	59.42	59.42	59.42	59.42
38.7500	59.42	59.41	59.41	59.41	59.41
39.0000	59.41	59.41	59.40	59.40	59.40
39.2500	59.40	59.40	59.39	59.39	59.39
39.5000	59.39	59.39	59.39	59.38	59.38
39.7500	59.38	59.38	59.38	59.37	59.37
40.0000	59.37	59.37	59.37	59.37	59.36
40.2500	59.36	59.36	59.36	59.36	59.36
40.5000	59.35	59.35	59.35	59.35	59.35
40.7500	59.34	59.34	59.34	59.34	59.34
41.0000	59.34	59.33	59.33	59.33	59.33
41.2500	59.33	59.33	59.32	59.32	59.32
41.5000	59.32	59.32	59.32	59.31	59.31
41.7500	59.31	59.31	59.31	59.31	59.30
42.0000	59.30	59.30	59.30	59.30	59.30
42.2500	59.29	59.29	59.29	59.29	59.29
42.5000	59.29	59.28	59.28	59.28	59.28
42.7500	59.28	59.28	59.27	59.27	59.27
43.0000	59.27	59.27	59.27	59.27	59.26
43.2500	59.26	59.26	59.26	59.26	59.26
43.5000	59.25	59.25	59.25	59.25	59.25

TIME vs. ELEVATION (ft)

Output Time increment = .0500 hrs
Time on left represents time for first value in each row.

Time hrs					
43.7500	59.25	59.25	59.24	59.24	59.24
44.0000	59.24	59.24	59.24	59.23	59.23
44.2500	59.23	59.23	59.23	59.23	59.23
44.5000	59.22	59.22	59.22	59.22	59.22
44.7500	59.22	59.21	59.21	59.21	59.21
45.0000	59.21	59.21	59.21	59.20	59.20
45.2500	59.20	59.20	59.20	59.20	59.20
45.5000	59.19	59.19	59.19	59.19	59.19
45.7500	59.19	59.19	59.18	59.18	59.18
46.0000	59.18	59.18	59.18	59.18	59.17
46.2500	59.17	59.17	59.17	59.17	59.17
46.5000	59.17	59.16	59.16	59.16	59.16
46.7500	59.16	59.16	59.16	59.15	59.15
47.0000	59.15	59.15	59.15	59.15	59.15
47.2500	59.14	59.14	59.14	59.14	59.14
47.5000	59.14	59.14	59.14	59.13	59.13
47.7500	59.13	59.13	59.13	59.13	59.13
48.0000	59.12	59.12	59.12	59.12	59.12
48.2500	59.12	59.12	59.12	59.11	59.11
48.5000	59.11	59.11	59.11	59.11	59.11
48.7500	59.10	59.10	59.10	59.10	59.10
49.0000	59.10	59.10	59.10	59.09	59.09
49.2500	59.09	59.09	59.09	59.09	59.09
49.5000	59.09	59.08	59.08	59.08	59.08
49.7500	59.08	59.08	59.08	59.08	59.07
50.0000	59.07	59.07	59.07	59.07	59.07
50.2500	59.07	59.07	59.06	59.06	59.06
50.5000	59.06	59.06	59.06	59.06	59.06
50.7500	59.06	59.05	59.05	59.05	59.05
51.0000	59.05	59.05	59.05	59.05	59.04
51.2500	59.04	59.04	59.04	59.04	59.04
51.5000	59.04	59.04	59.03	59.03	59.03
51.7500	59.03	59.03	59.03	59.03	59.03
52.0000	59.03	59.02	59.02	59.02	59.02
52.2500	59.02	59.02	59.02	59.02	59.02
52.5000	59.01	59.01	59.01	59.01	59.01
52.7500	59.01	59.01	59.01	59.01	59.00
53.0000	59.00	59.00	59.00	59.00	59.00
53.2500	59.00	59.00	59.00	58.99	58.99
53.5000	58.99	58.99	58.99	58.99	58.99
53.7500	58.99	58.99	58.98	58.98	58.98
54.0000	58.98	58.98	58.98	58.98	58.98
54.2500	58.98	58.97	58.97	58.97	58.97
54.5000	58.97	58.97	58.97	58.97	58.97

TIMMONS GROUP
YOUR VISION ACHIEVED THROUGH OURS.

Transmittal

To:
Scott Thomas P. E.
James City County
Environmental Division
101 Mounts Bay Road
Williamsburg, Virginia 23187-8784

Date: March 29, 2007

Job No.: 22303

RECEIVED
MAR 30 2007
ENVIRONMENTAL DIVISION

Regarding: Warhill Site Storm Trunk Sewer and Pond Forebay As-built Plans

We are sending you the following items: ☒ Attached ☐ Under separate cover via _____

☐ Shop Drawings ☐ Prints ☒ Plans ☐ Specifications
☐ Copy of Letter ☐ Change Order ☒ Other Certification form

Copies	Date	Description
2		Sets of as-built plans
1		Mylar set of as-built plans

This information is transmitted as checked below:

☐ For Approval ☐ Approved as submitted ☐ Resubmit _____ copies for approval
☒ For your use ☐ Approved as noted ☐ Submit _____ copies for distribution
☒ As requested ☐ Returned for corrections ☐ Return _____ corrected prints
☐ For review/comment ☐ Other _____ ☐ for bids due _____
☐ Prints returned after loan to us

Remarks:
Scott,

Here is the information you requested for the Warhill Site storm trunk sewer and pond forebay as-built plans. Please let me know if you need any additional information.

thanks, Mike

Copy to:

Signed: _____
Michael L. Claud, P.E.
Phone: (804) 200-6413

If enclosures are not as noted, please notify us at once

1001 Boulders Parkway, Suite 300 | Richmond, VA 23225
TEL 804.200.6500 FAX 804.560.1016
Site Development | Residential | Infrastructure | Technology
www.timmons.com

WARHILL PPEA FIELD INSPECTION REPORTS

Note:

These are daily inspection log reports from the County's consultant (Timmons Group) for the storm trunk line under County Plan No. SP-143-05 and for the District Park West Pond Dam and Forebay (PC105). Dates are from July 25, 2005 to January 31, 2006.

JCC/WARHILL SITE ROADWAYS & IMPROVEMENTS

WARHILL PPEA

STORM TRUNK LINE & FOREBAY SP-57-05

STORM TRUNK SEWER & POND FOREBAY

RECEIVED
MAR 30 2007
ENVIRONMENTAL DIVISION

James City County, Virginia
Environmental Division

Stormwater Management / BMP Facilities Record Drawing and Construction Certification

Standard Forms & Instructions

Contents

			Page
Record Drawing and Construction Certification Forms			
	Section 1 - Site Information		1
	Section 2 - Construction Information		2
	Section 3 - Owner / Designer / Contractor Information		2
	Section 4 - Professional Certifications		3
	Section 5 - Certification Requirements and Instructions		4
Record Drawing Checklist			
I.	Methods and Presentation	(Required for All Facilities)	6
II.	Minimum Standards	(Required for All Facilities)	6
III.	Group A - Wet Ponds		8
IV.	Group B - Wetlands		9
V.	Group C - Infiltration Practices		10
VI.	Group D - Filtering Systems		11
VII.	Group E - Open Channel Systems		12
VIII.	Group F - Extended Dry Detention		13
IX.	Group G - Open Spaces		14
X.	Storm Drainage Systems	(Associated with BMP's Only)	15
XII.	Other Systems		15
XIII.	References		16

STORM TRUNK LINE & FOREBAY

APPROVED
James City County
Environmental Division
By: [signature]
Date: 04-02-07

Issue Date
February 1, 2001

James City County, Virginia
Environmental Division

Stormwater Management / BMP Facilities
Record Drawing and Construction Certification Forms

(Note: In accordance with the requirements of the Chesapeake Bay Preservation Ordinance, Chapter 23, Section 23-10(4), BMP's shall be designed and constructed in accordance with the manual entitled James City County Guidelines for Design and Construction of Stormwater Management BMP's. Erosion and sediment control policy and approved plans generally require that at the completion of the project and prior to release of surety, an "as-built" plan prepared by a registered Professional Engineer or Certified Land Surveyor must be provided for the drainage system for the project, including any Best Management Practice (BMP) facilities. In addition, for BMP facilities involving the construction of an impounding structure or dam embankment, certification is required by a Professional Engineer who has inspected the structure during its construction. Currently there are over 20 water quality type BMP's accepted by the County.)

Section 1 - Site Information:

Project Name: WARHILL SITE ROADWAYS & IMPROVEMENTS
Structure/BMP Name: STORM TRUNK LINE & FOREBAY
Project Location: WARHILL SITE - JAMES CITY COUNTY, VA
BMP Location:
County Plan No.: SP - 143 - 05

Project Type: ☐ Residential ☐ Business ☐ Commercial ☐ Office ☐ Institutional ☐ Industrial ☐ Public ☐ Roadway ☐ Other _____

Tax Map/Parcel No.:
BMP ID Code (if known): TO PC105 WEST POND DAM
Zoning District::
Land Use:
Site Area (sf or acres): 588.21

Brief Description of Stormwater Management/BMP Facility: STORM TRUNK SEWER TO SERVE THE WARHILL TRACT AND SEDIMENT FOREBAY FOR THE WESTERN POND (PC105).

Nearest Visible Landmark to SWM/BMP Facility:

Nearest Vertical Ground Control (if known):
☐ JCC Geodetic Ground Control ☐ USGS ☐ Temporary ☐ Arbitrary ☐ Other
Station Number or Name:
Datum or Reference Elevation:
Control Description:
Control Location from Subject Facility:

Section 2 - Stormwater Management / BMP Facility Construction Information:

PreConstruction Meeting Held for Construction of SWM/BMP Facility: ☐ Yes ☐ No ☐ Unknown
Approx. Construction Start Date for SWM/BMP Facility: _____
Facility Monitored by County Representative during Construction: ☐ Yes ☐ No ☐ Unknown
Name of Site Work Contractor Who Constructed Facility: Curtis Contracting
Name of Professional Firm Who Routinely Monitored Construction: Timmons Group
Date of Completion for SWM/BMP Facility: _____
Date of Record Drawing/Construction Certification Submittal: October 12, 2006

(Note: Record Drawing and Construction Certifications are required within thirty (30) days of the completion of Stormwater Management and/or BMP facility construction. Record Drawings and Construction Certifications must be reviewed and approved by the James City County Environmental Division prior to final inspection, acceptance and bond or surety release.)

Section 3 - Owner / Designer / Contractor Information:

Owner/Developer: *(Note: Site Owner or Applicant responsible for development of the project.)*

Name: James City County
Mailing Address: 101 E. Mounts Bay Rd, Williamsburg, VA 23187

Business Phone: 757-253-6671 Fax: 757-253-6850
Contact Person: Wayland Bass Title: County Engineer

Design Professional: *(Note: Professional Engineer or Certified Land Surveyor responsible for the design and preparation of plans and specifications for the Stormwater Management / BMP facility.)*

Firm Name: Timmons Group
Mailing Address: 1001 Boulders Parkway, Suite 300
Richmond, VA 23225
Business Phone: 804-200-6500
Fax: 804-560-1016
Responsible Plan Preparer: Andrew Gould, P.E.
Title: Senior Associate
Plan Name: Warhill Site Roadways & Improvements
Firm's Project No. 22303
Plan Date: 3/3/06
Sheet No.'s Applicable to SWM/BMP Facility: ____/____/____/____/____

BMP Contractor: *(Note: Site Work Contractor directly responsible for construction of the Stormwater Management / BMP facility.)*

Name: Curtis Contracting, Inc.
Mailing Address: 7481 Theron Road, West Point, VA 23181

Business Phone: 804-843-4633
Fax: 804-843-2545
Contact Person: Andy Curtis
Site Foreman/Supervisor: _____
Specialty Subcontractors & Purpose (for BMP Construction Only): _____

Section 4 - Professional Certifications:

Certifying Professionals: *(Note: A Registered Professional Engineer or Certified Land Surveyor is responsible for preparation of a Record Drawing, sometimes referred to as an As-Built plan, for the drainage system for the project including any Stormwater Management/BMP Facilities. A Registered Professional Engineer is responsible for the inspection, monitoring and certification of Stormwater Management / BMP facilities during its construction.)*

Record Drawing and Construction Certifications for Stormwater Management / BMP Facilities

Record Drawing Certification

Firm Name: Timmons Group
Mailing Address: 1001 Boulders Pkwy, Suite 300
Richmond VA 23225
Business Phone: 804-200-6500
Fax: 804-560-1016

Name: Andrew P. Gould
Title: Stormwater Services Manager

Signature:
Date: 10-13-06

I hereby certify to the best of my knowledge and belief that this record drawing represents the actual condition of the Stormwater Management / BMP facility. The facility appears to conform with the provisions of the approved design plan, specifications and stormwater management plan, except as specifically noted.

COMMONWEALTH OF VIRGINIA
ANDREW P. GOULD
NO. 030591
10-13-06
PROFESSIONAL ENGINEER

_____ (Seal)

Virginia Registered Professional Engineer
or Certified Land Surveyor

Construction Certification

Firm Name: TIMMONS GROUP
Mailing Address: 1001 BOULDERS PKWY, SUITE 300
RICHMOND VA 23225
Business Phone: 804-200-6580
Fax: 804-794-1899

Name: GENE W. HATCHER
Title: CONSTRUCTION SERVICES MAN.

Signature:
Date:

I hereby certify to the best of my knowledge and belief that this Stormwater Management/BMP facility was monitored and constructed in accordance with the provisions of the approved design plan, specifications and stormwater management plan, except as specifically noted.

COMMONWEALTH OF VIRGINIA
GENE W. HATCHER
NO. 13067
3-27-07
PROFESSIONAL ENGINEER

_____ (Seal)

Virginia Registered
Professional Engineer

Section 5 - Record Drawing and Construction Certification Requirements and Instructions:

- ☐ PreConstruction Meeting - Provides an opportunity to review SWM / BMP facility construction, maintenance and operation plans and address any questions regarding construction and/or monitoring of the structure. The design engineer, certifying professionals (if different), Owner/Applicant, Contractor and County representative(s) are encouraged to attend the preconstruction meeting. Advanced notice to the Environmental Division is requested. Usually, this requirement can be met simultaneously with Erosion and Sediment Control preconstruction meetings held for the project.

- ☐ A fully completed ***STORMWATER MANAGEMENT / BMP FACILITIES, RECORD DRAWING and CONSTRUCTION CERTIFICATION FORM*** and ***RECORD DRAWING CHECKLIST***. All applicable sections shall be completed in their entirety and certification statements signed and sealed by the registered professional responsible for individual record drawing and/or construction certification.

- ☐ The Record Drawing shall be prepared by a Registered Professional Engineer or Certified Land Surveyor for the drainage system of the project including any Best Management Practices.

- ☐ Construction Certification. Construction of Stormwater Management / BMP facilities which contain impoundments, embankments and related engineered appurtenances including subgrade preparation, compacted soils, structural fills, liners, geosynthetics, filters, seepage controls, cutoffs, toe drains, hydraulic flow control structures, etc. shall be visually observed and monitored by a Registered Professional Engineer or his/her authorized representative. The Engineer must certify that the structure, embankment and associated appurtenances were built in accordance with the approved design plan, specifications and stormwater management plan and standard accepted construction practice and shall submit a written certification and/or drawings to the Environmental Division as required. Soil and compaction test reports, concrete test reports, inspection reports, logs and other required construction material or installation documentation may be required by the Environmental Division to substantiate the certification, if specifically requested. The Engineer shall have the authority and responsibility to make minor changes to the approved plan, in coordination with the assigned County inspector, in order to compensate for unsafe or unusual conditions encountered during construction such as those related to bedrock, soils, groundwater, topography, etc. as long as changes do not adversely affect the integrity of the structure(s). Major changes to the approved design plan or structure must be reviewed and approved by the original design professional and the James City County Environmental Division.

- ☐ Record Drawing and Construction Certifications are required within **thirty (30) days** of the completion of Stormwater Management / BMP facility construction. Submittals must be reviewed and accepted by James City County Environmental Division prior to final inspection, acceptance and bond/surety release.

Dual Purpose Facilities - Completion of construction also includes an interim stage for Stormwater Management / BMP facilities which serve dual purpose as temporary sediment basins during construction and as permanent stormwater management / BMP facilities following construction, once development and stabilization are substantially complete. For these dual purpose facilities, construction certification is required once the temporary sediment basin phase of construction is complete. Final record drawing and construction certification of additional permanent components is required once permanent facility construction is complete.

Interim Construction Certification is required for those dual purpose embankment-type facilities that are generally ten (10) feet or greater in dam height (*) and may not be converted, modified or begin function as a permanent SWM / BMP structure for a period generally ranging from six (6) to eighteen (18) months or more from issuance of a Land Disturbance permit for construction.

Interim or final record drawing and construction certifications are not required for temporary sediment basins which are designed and constructed in accordance with current minimum standards and specifications for temporary sediment basins per the Virginia Erosion and Sediment Control Handbook (VESCH); have a temporary service life of less than eighteen (18) months; and will be removed completely once associated disturbed areas are stabilized, unless a distinct hazard to the public's health, safety and welfare is determined by the Environmental Division due to the size or presence of the structure or due to evidence of improper construction.

(*Note: Dam Height as referenced above is generally defined as the vertical distance from the natural bed of the stream or waterway at the downstream toe of the embankment to the top of the embankment structure in accordance with 4VAC50-20-30, Virginia Impoundment Structure Regulations and the Virginia Dam Safety Program.)

- ☐ Record Drawings shall provide, at a minimum, all information as shown within these requirements and the attached **RECORD DRAWING CHECKLIST** specific to the type of SWM/BMP facility being constructed. Other additional record data may be formally requested by the James City County Environmental Division. *(Note: Refer to the current edition of the James City County Guidelines for Design and Construction of Stormwater Management BMP's manual for a complete list of acceptable BMP's. Currently there are over 20 acceptable water quality type BMP's accepted by the County.)*

- ☐ Record Drawings shall consist of blue/black line prints and a reproducible (mylar, sepia, diazo, etc.) set of the approved stormwater management plan including applicable plan views, profiles, sections, details, maintenance plans, etc. as related to the subject SWM / BMP facility. The set shall indicate **"RECORD DRAWING "** in large text in the lower right hand corner of each sheet with record elevations, dimensions and data drawn in a clearly annotated format and/or boxed beside design values. Approved design plan values, dimensions and data shall not be removed or erased. Drawing sheet revision blocks shall be modified as required to indicate record drawing status. Elevations to the nearest 0.1' are sufficiently accurate except where higher accuracy is needed to show positive drainage. Certification statements as shown in Section 4 of the Record Drawing and Construction Certification Form, ***or similar forms thereof***, and professional signatures and seals, with dates matching that of the record drawing status in the revision or title block, are also required on all associated record drawing plans, prints or reproducibles.

- ☐ Submission Requirements. Initial and subsequent submissions for review shall consist of a minimum of one (1) blue/black line set for record drawings and one copy of the construction certification documents with appropriate transmittal. Under certain circumstances, it is understood that the record drawing and construction certification submissions may be performed by different professional firms. Therefore, record drawing submission may be in advance of construction certification or vice versa. Upon approval and prior to release of bond/surety, final submission shall include one (1) reproducible set of the record drawings, one (1) blue/black line set of the record drawings and one (1) copy of the construction certification. Also for current and/or future incorporation into the County BMP database and GIS system, it is requested that the record drawings also be submitted to the Environmental Division on a diskette or CD-ROM in an acceptable electronic file format such as *.dxf, *.dwg, etc. or in a standard scanned and readable format. The electronic file requirement can be discussed and coordinated with Environmental Division staff at the time of final submission.

STORMWATER MANAGEMENT / BMP FACILITIES
RECORD DRAWING CHECKLIST

(Key for Checklist is as follows: XX Acceptable N/A Not Applicable Inc Incomplete)

I. Methods and Presentation: *(Required for all Stormwater Management / BMP facilities.)*

XX 1. All constructed facilities meet approved design plans, unless otherwise shown. Record information or deviations from approved design plan shown in clearly annotated format and/or boxed beside design values.

XX 2. Elevations to the nearest 0.1' unless higher accuracy is needed to show positive drainage.

XX 3. All plan sheets labeled with "RECORD DRAWING" in large text in lower right hand corner (Approved County Plan Number and BMP ID Code can be included if known).

XX 4. All plan sheet revision blocks modified to indicate date and record drawing status.

XX 5. All plan sheets have certification statements and certifying professional's signature and seal.

II. Minimum Standards: *(Required for all Stormwater Management / BMP facilities, as applicable.)*

XX 1. All requirements of Section I (Methods and Presentation) apply to this section.

XX 2. Plan Views: Show general location, arrangement and dimensions. Location and alignment shall generally match approved design plans.

XX 3. Profile or elevations along top or berm of the facility. At a minimum, elevations are required at each end, at intervals not to exceed 50 feet and where low spots may be present. Top of embankment or berm elevations must be no less than design elevation plus any settlement allowances.

XX 4. Top widths, berm widths and embankment side slopes.

N/A 5. Show length, width and depth of facility or grading, contours or spot elevations as required to verify permanent pool and design storage volumes were met or were reasonably close to the approved design. Evaluation of as-built grading, contours, spot elevations, or cross-sections, may be necessary by the professional to ensure approved design configurations, depths and volumes were closely maintained. If grading or elevations are significantly different from the approved plan, the Environmental Division shall be contacted immediately to determine whether the variation is acceptable or whether further evidence will be required. Facilities which do not closely resemble approved plan grades, elevations or configurations may require regrading by the Contractor; check volumetric computations; and/or a check hydraulic routing to ensure approved design water surface elevations, discharges or freeboard were closely maintained.

N/A 6. Cross-section of the embankment through the principal spillway or outlet barrel. Must extend at least 100 ft. downstream of the pipe outlet or to recorded site property line, whichever is closer. Proper correlation is required between principal spillway (control structure) crest, emergency spillway crest, orifice and weirs and the top of the dam or facility. All elevations and dimensions must reasonably match the design plan or be sequentially relative to each other and the facility must reflect the required design storage volume(s) and/or design depth.

N/A 7. Profile or elevations along the entire centerline of the emergency spillway. Emergency spillway may be steeper, but no flatter or narrower than design.

N/A 8. Elevation of the principal spillway crest or outlet crest of the structure.

N/A 9. Primary control structure (riser) diameter or dimensions, height, type of material and base size. Indicate provisions for access that are present such as steps, ladders, etc.

N/A 10. Dimensions, locations and elevations of outlet orifices, weirs, slots and drains.

N/A 11. Type and size of anti-vortex and trash rack device. Height, diameter, dimensions, bar spacings (if applicable) and elevations relative to the principal spillway crest. Indicate if lockable hatch is present or not.

N/A 12. Type, location, size and number of anti-seep collars or documentation of other methods utilized for seepage control. **May need to obtain this information during construction.**

N/A 13. Top of impervious core embankment, core trench limits and elevation of cut-off trench bottom. **May need to obtain this information during construction.**

N/A 14. Elevation of the principal spillway barrel (outlet pipe) inlet and outlet invert.

N/A 15. Outlet barrel diameter, length, slope, type and thickness class of material and type of flared end sections, headwall or endwall.

N/A 16. Outfall protection dimension, type and depth of rock and if underlain filter fabric is present.

N/A 17. BMP interior and periphery landscaping zones conform with arrangements and requirements of the approved design plan.

N/A 18. Maintenance plan taken from approved design plan transposed onto record drawing set.

N/A 19. Fencing location and type, if applicable to facility.

XX 20. BMP vicinity properly cleaned of stockpiles and construction debris.

XX 21. No visual signs of erosion or channel degradation immediately downstream of facility.

XX 22. Any other information formally requested by the Environmental Division specific to the constructed SWM/BMP facility.

(Key for Checklist is as follows: XX Acceptable N/A Not Applicable Inc Incomplete)

III. Group A - Wet Ponds *(Includes A-1 Small Wet Ponds; A-2 Wet Ponds; A-3 Wet Ext Det Ponds.)*

N/A A1. All requirements of Section II, Minimum Standards, apply to Group A facilities.

N/A A2. Principal spillway consists of reinforced concrete pipe with O-Ring gaskets for watertight joint construction.

N/A A3. Sediment forebays or pretreatment devices provided at inlets to pond. Generally 4 to 6 ft. deep.

N/A A4. Access for maintenance and equipment is provided to the forebay(s). Access corridors are at least 12 ft. wide, have a maximum slope of 15 percent and are adequately stabilized to withstand heavy equipment or vehicle use.

N/A A5. Adequate fixed vertical sediment depth markers installed in the forebay(s) for future sediment monitoring purposes.

N/A A6. Pond liner (if required) provided. Either clay liners, polyliners, bentonite liners or use of chemical soil additives based on requirements of the approved plan.

N/A A7. Minimum 6 percent slope safety bench extending a minimum of 15 feet outward from normal pool edge and/or an aquatic bench extending a minimum of 10 feet inward from the normal shoreline with a maximum depth of 12 inches below the normal pool elevation, if applicable, per the approved design plans. (Note: Safety benches may be waived if pond side slopes are no steeper than 4H:1V).

N/A A8. No trees are present within a zone 15 feet around the embankment toe and 25 feet from the principal spillway structure.

N/A A9. Wet permanent pool, typically 3 to 6 feet deep, is provided and maintains level within facility.

N/A A10. Low flow orifice has a non-clogging mechanism.

N/A A11. A pond drain pipe with valve was provided.

N/A A12. Pond side slopes are not steeper than 3H:1V, unless approved plan allowed for steeper slope.

N/A A13. End walls above barrels (outlet pipe) greater than 48 inch in diameter are fenced to prevent a fall hazard.

STORMWATER MANAGEMENT / BMP FACILITIES
RECORD DRAWING CHECKLIST

(Key for Checklist is as follows: XX Acceptable N/A Not Applicable Inc Incomplete)

IV. Group B - Wetlands *(Includes B-1 Shallow Marsh; B-2 Ext Det Shallow Wetlands; B-3 Pond Wetland System and B-4 Pocket Wetland)*

N/A B1. Same requirements as Group A Wet Ponds.

N/A B2. Minimum 2:1 length to width flow path provided across the facility.

N/A B3. Micropool provided at or around outlet from BMP (generally 3 to 6 ft. deep).

N/A B4. Wetland type landscaping provided in accordance with approved plan. Includes correct pondscaping zones, plant species, planting arrangements, wetland beds, etc. Wetland plants include 5 to 7 emergent wetland species. Individual plants at 18 inches on center in clumps.

N/A B5. Adequate wetland buffer provided (Typically 25 ft. outward from maximum design water surface elevation and 15 ft. setback to structures).

N/A B6. No more than one-half (½) of the wetland surface area is planted.

N/A B7. Topsoil or wetland mulch provided to support vigorous growth of wetland plants.

N/A B8. Planting zones staked or flagged in field and locations subsequently established by appropriate field surveying methods for record drawing presentation.

STORMWATER MANAGEMENT / BMP FACILITIES
RECORD DRAWING CHECKLIST

(Key for Checklist is as follows: XX Acceptable N/A Not Applicable Inc Incomplete)

V. Group C - Infiltration Practices

(Includes C-1 Infiltration Trench; C-2 Infiltration Trench; C-3 Infiltration Basin; and C-4 Infiltration Basin)

N/A C1. All requirements of Section II, Minimum Standards, apply to Group C facilities as applicable.

N/A C2. Facility is not located on fill slopes or on natural ground in excess of six (6) percent.

N/A C3. Pretreatment devices provided prior to entry into the infiltration facility. Acceptable pretreatment devices include sediment forebays, sediment basins, sediment traps, sump pits or inlets, grass channels, plunge pools or other acceptable measures.

N/A C4. Three (3) or more of the following pretreatment devices provided to protect long term integrity of structure: grass channel; grass filter strip; bottom sand layer; upper filter fabric layer; use of washed bank run gravel aggregate.

N/A C5. Sides of infiltration practice lined with filter fabric.

N/A C6. Facility was not used for erosion and sediment control purposes and sediment was prevented from entering the facility to the greatest extent possible during construction.

N/A C7. Stabilization and acceptable vegetative cover established over contributing drainage area prior to conveyance of stormwater to the facility.

N/A C8. Minimum one hundred (100) foot separation horizontally from any known water supply well and minimum one hundred (100) foot separation upslope from any building.

N/A C9. Minimum twenty-five (25) foot separation down gradient from any structure.

N/A C10. Stormwater outfalls provided for overflow associated with larger design storms.

N/A C11. No visual signs of erosion or channel degradation immediately downstream of facility.

N/A C12. Facility does not currently cause any apparent surface or subsurface water problems to downgrade properties.

N/A C13. Observation well provided.

N/A C14. Adequate, direct access provided to the facility for future maintenance, operation and inspection.

STORMWATER MANAGEMENT / BMP FACILITIES
RECORD DRAWING CHECKLIST

(Key for Checklist is as follows: XX Acceptable N/A Not Applicable Inc Incomplete)

VI. Group D - Filtering Systems

(Includes D-1 Bioretention Cells; D-2 Surface Sand Filters; D-3 Underground Sand Filters; D-4 Perimeter Sand Filters; D-5 Organic Filters; and D-6 Pocket Sand Filters)

N/A D1. All requirements of Section II, Minimum Standards, apply to Group D facilities.

N/A D2. Sediment pretreatment devices provided.

N/A D3. For D-1 BMPs (Bioretention Cells), pretreatment consisting of a grass filter strip below level spreader (deflector); a gravel diaphragm; and mulch and planting soil layers were provided.

N/A D4. For D-1 BMPs (Bioretention Cells), plantings consist of native plant species; vegetation provided was based on zones of hydric tolerances; trees and understory of shrubs and herbaceous materials were provided; woody vegetation is absent from inflow locations; and trees are located around facility perimeter.

N/A D5. Facility was not used for erosion and sediment control purposes and sediment was prevented from entering the facility to the greatest extent possible during construction.

N/A D6. No visible signs of accumulated silt/sediment were present in the facility following construction or alternately, accumulated silt/sediment was properly removed .

N/A D7. Filtering system is off-line from storm drainage conveyance system.

N/A D8. Overflow outlet has adequate erosion protection.

N/A D9. Deflector, diversion, flow splitter or regulator structure provided to divert the water quality volume to the filtering structure.

N/A D10. Minimum four (4) inch perforated underdrain provided in a clean aggregate envelope layer beneath the facility.

N/A D11. Minimum fifty (50) foot separation from any slope fifteen (15) percent or greater. Minimum one hundred (100) foot separation horizontally from any known water supply well. Minimum one hundred (100) foot separation upslope and twenty-five (25) foot separation downslope from any building.

N/A D12. Stabilization and acceptable vegetative cover established over contributing drainage area prior to conveyance of stormwater to the facility.

N/A D13. No visual signs of erosion or channel degradation immediately downstream of facility.

N/A D14. Adequate, direct access provided to the pretreatment area and/or filter bed for future maintenance.

STORMWATER MANAGEMENT / BMP FACILITIES
AS-BUILT PLAN CHECKLIST

(Key for Checklist is as follows: XX Acceptable N/A Not Applicable Inc Incomplete)

VII. Group E - Open Channel Systems

(Includes E-1 Wet Swales (Check Dams); E-2 Dry Swales;and E-3 Biofilters)

N/A E1. All requirements of Section II, Minimum Standards, apply to Group E facilities as applicable.

N/A E2. Open channel system has constructed longitudinal slope of less than four (4) percent.

N/A E3. No visual signs of erosion in the open channel system's soil and/or vegetative cover.

N/A E4. Open channel side slopes are no steeper than 2H:1V at any location. Preferred channel sideslope is 3H:1V or flatter.

N/A E5. No visual signs of ponding are present at any location in the open channel system, except at rock check dam locations for E-1 systems (Wet Swales).

N/A E6. For E-2 BMPs (Dry Swales), an underdrain system was provided.

N/A E7. Treated timber or rock check dams provided as pretreatment devices for the open channel system.

N/A E8. Gravel diaphragm provided in areas where lateral sheet flow from impervious surfaces are directly connected to the open channel system.

N/A E9. Grass cover/stabilization in the open channel system appears adaptable to the specific soils and hydric conditions for the site and along the channel system.

N/A E10. Open channel system areas with grass covers higher than four (4) to six (6) inches were properly mowed.

N/A E11. Facility was not used for erosion and sediment control purposes and sediment was prevented from entering the facility to the greatest extent possible during construction.

N/A E12. No visible signs of accumulated silt/sediment were present in the facility following construction or alternately, accumulated silt/sediment was properly removed and no adverse affects to the function of the facility are anticipated.

N/A E13. For E-3 BMPs (Biofilters), the bottom width is six (6) feet maximum at any location.

N/A E14. For E-3 BMPs (Biofilters), sideslopes are 3H:1V maximum at any location.

N/A E15. For E-3 BMPs (Biofilters), the constructed channel slope is less than or equal to three (3) percent at any location.

N/A E16. For E-3 BMPs (Biofilters), the constructed grass channel is approximately equivalent to the constructed roadway length.

STORMWATER MANAGEMENT / BMP FACILITIES
RECORD DRAWING CHECKLIST

(Key for Checklist is as follows: XX Acceptable N/A Not Applicable Inc Incomplete)

VIII. Group F - Extended Dry Detention

(Includes F-1 Timber Walls; and F-2 Dry Extended Detention with Forebay)

N/A F1. All requirements of Section II, Minimum Standards, apply to Group F facilities.

N/A F2. Basin bottom has positive slope and drainage from all basin inflow points to the riser (or outflow) location.

N/A F3. Timber wall BMP used in intermittent stream only. (ie. Prohibited in perennial streams.)

N/A F4. Forebay provided approximately 20 ft. upstream of the facility. Forebays generally 4 to 6 feet in depth.

N/A F5. A reverse slope pipe, vertical stand pipe or mini-barrel and riser was provided to prevent clogging.

N/A F6. Principal spillway and outlet barrel provided consisting of reinforced concrete pipe with O-Ring gaskets for watertight joint construction.

N/A F7. Mini-barrel and riser, if used, contains a removable trash rack to reduce clogging.

N/A F8. Low flow orifice, if used, has a minimum diameter of three (3) inches or two (2) inches if internal orifice control was utilized and a small, cage type external trash rack.

N/A F9. Timbers properly reinforced or concrete footing provided if soil conditions were prohibitive.

N/A F10. Timber wall cross members extended to a minimum depth of two (2) feet below ground elevation.

N/A F11. Protection against erosion and scour from the low flow orifice and weir-flow trajectory provided.

N/A F12. Stilling basin or standard outlet protection provided at principal spillway outlet.

N/A F13. Adequate, direct access provided to the facility. Access corridor to facility is at least ten (10) feet wide, slope is less than twenty (20) percent and appropriate stabilization provided for equipment and vehicle use. Access extends to forebay, standpipe and timber wall, as applicable.

N/A F14. No visual signs of undercutting of timber walls or clogging of the low orifice were present.

N/A F15. No visual signs of erosion or channel degradation immediately downstream of facility.

N/A F16. No visible signs of accumulated silt/sediment were present in the facility following construction or alternately, accumulated silt/sediment was properly removed and no adverse affects to the function of the facility are anticipated.

STORMWATER MANAGEMENT / BMP FACILITIES
RECORD DRAWING CHECKLIST

(Key for Checklist is as follows: XX Acceptable N/A Not Applicable Inc Incomplete)

IX. Group G - Open Spaces *(Includes All Open Space Types G-1; G-2; and G-3)*

N/A G1. All requirements of Section II, Minimum Standards, apply to Group G facilities as applicable.

N/A G2. Constructed impervious areas appear to conform with locations indicated on the approved plan and appear less than sixty (60) percent impervious in accordance with the requirements of the James City County Chesapeake Bay Preservation Ordinance.

N/A G3. Dedicated open space areas are in undisturbed common areas, conservation easements or are protected by other enforceable instruments that ensures perpetual protection.

N/A G4. Provisions included to clearly specify how the natural vegetated areas utilized as dedicated open space will be managed and field identified (marked).

N/A G5. Adequate protection measures were implemented during construction to protect the defined dedicated open space areas.

N/A G6. Dedicated open space areas were not disturbed during construction (ie. cleared, grubbed or graded).

STORMWATER MANAGEMENT / BMP FACILITIES
RECORD DRAWING CHECKLIST

(Key for Checklist is as follows: XX Acceptable N/A Not Applicable Inc Incomplete)

X. Storm Drainage Systems (Associated with BMP's Only)

(Includes all incidental stormwater drainage conveyance systems associated with SWM/BMP facilities such as onsite or offsite storm drains, open channels, inlets, manholes, junctions, outlet protections, deflectors, etc. These facilities are external to the treatment function of, but are directly associated with drainage to and/or from a constructed SWM/BMP facility. The intent of this portion of the certification is to accurately identify the type and quantity of inflow or outflow points associated with the facility for future reference. The Professional may use his/her own discretion to determine inclusive facilities to meet the intent of this section. As a general rule, storm drainage systems would include incidental facilities to the nearest access structure upslope or downslope from the normal physical limits of the facility or 800 feet of storm drainage conveyance system length, whichever is less.)

XX SD1. All requirements of Section II, Minimum Standards, apply to Storm Drainage Systems.

XX SD2. Horizontal location of all pipe and structures relative to the SWM/BMP facility.

XX SD3. Type, top elevation and invert elevation of all access type structures (inlets, manholes, etc.).

XX SD4. Material type, size or diameter, class, invert elevations, lengths and slopes for all pipe segments.

XX SD5. Class, length, width and depth of riprap and outlet protections or dimensions of special energy dissipation structures.

XII. Other Systems

(Includes any non-typical, specialty, manufactured or innovative stormwater management/BMP practices or systems generally accepted for use as or in conjunction with other acceptable stormwater management / BMP practices. Requires evidence of prior satisfactory industry use and prior Environmental Division approval, waiver or exception .)

N/A O1. All requirements of Section II, Minimum Standards, apply to this section.

N/A O2. Certification criteria to be determined on a case-by-case basis by the Environmental Division specific to the proposed SWM/BMP facility.

XIII. References

(The James City County Record Drawing and Construction Certification Forms and Checklists for Stormwater Management / BMP facilities were developed using the following sources and references.)

- ☐ Baltimore County, Maryland Soil Conservation District, As-Built Stormwater Management Pond Checklist.
- ☐ James City County, Virginia, Guidelines for Design and Construction of Stormwater Management BMP's (October 1999).
- ☐ James City County, Virginia, Stormwater Detention/Retention Basin Design Checklist and Erosion and Sediment Control and Stormwater Management Design Plan Checklists.
- ☐ James City County Stormwater Policy Framework, Final Report of the James City County BMP Policy Project, October 1998, The Center for Watershed Protection.
- ☐ Prince Georges County, Maryland, As-Built Requirements Retention or Detention Pond/Basin.
- ☐ Prince William County, Virginia, Stormwater Management Fact Sheet.
- ☐ Stafford County, Virginia, As-Built Plan Checklist.
- ☐ Stormwater Management Design Manual, NRCS Maryland Code No. 378, Pond Standards and Specifications.
- ☐ USEPA/Watershed Management Institute, Stormwater Management Inspection Forms.
- ☐ Virginia Impounding Structure Regulations (Dam Safety), Department of Conservation & Recreation, 1997.
- ☐ Virginia Erosion and Sediment Control Handbook, Third Edition 1992, Virginia Department of Conservation and Recreation, Division of Soil and Water Conservation.
- ☐ Virginia Stormwater Management Handbook, 1999 edition, Virginia Department of Conservation and Recreation, Division of Soil and Water Conservation.

File: Shared\SWMProg\BMP\Certif\RDCC.wpd

Scott Thomas

From: Scott Thomas

Sent: Tuesday, November 01, 2005 2:19 PM

To: Andrew Gould (andrew.gould@timmons.com); 'michael.claud@timmons.com'; 'Bill Richards'

Cc: Wayland Bass; Steven W. Hicks; Matthew Arcieri

Subject: Warhill PPEA: Revisions to Forebay & West Pond Dam

Our Division has reviewed two cut sheets as provided by Timmons at the Halloween Oct 31, 2005 Warhill PPEA Standing Team meeting. The two submittals were as follows:

1) Revised Detail for Paved Channel Upstream of Forebay (transmittal dated 10/31/05)
2) Revised Inlet Box Structure for the Western Pond Dam (email dated 10/28/05)

Our Division has no comments on the transmittals as forwarded; however, I thought I had made it clear at the PPEA meeting of October 17, 2005 that the process involved was to revise the applicable approved plan sheet(s) and that these changes would not just be covered on asbuilts. It is our intent to keep the approved plans as up to date as possible, especially since the forebay and west pond dam are subject to other regulatory permits (ie. wetland, dam safety, etc.) Based on my records, it would appear the following drawings need revised and two (2) sets forwarded to Matt Arcieri, Planning for insertion into the approved plan set.

Forebay/Channel (per # 1 above): Sheets C3.0, C9.1 and C9.2 from approved plan SP-57-05/SP-59-05.

West Pond Dam (per # 2 above): Sheets C-1.5 and C-1.6 from approved plan SP-82-05.

Scott J. Thomas, P.E.
James City County
Environmental Division

TIMMONS GROUP

YOUR VISION ACHIEVED THROUGH OURS.

TRANSMITTAL

TO: Scott Thomas, P.E.
James City County Environmental Division

Date: 10/31/2005 Job #:
Project: JCC PPEA Western Dam
Reference:
Copies Sent To:

☒ ENCLOSED PLEASE FIND:
☐ WE ARE SENDING UNDER SEPARATE COVER:

COPIES	DATE	NUMBER	DESCRIPTION
1	10/21/05		Revised detail for paved channel upstream of forebay

THESE ITEMS ARE TRANSMITTED:
If enclosures are not as noted, please notify us at once.

COMMENTS:
Scott - this is our recommendation for the underdrain detail for the paved channel upstream of the forebay.

This is submitted for your records and will be included in the as-built submittal.

Thanks

Andrew Gogold

10/31/05

1001 Boulders Parkway, Suite 300 | Richmond, VA 23225
TEL 804.200.6500 FAX 804.560.1016
Site Development | Residential | Infrastructure | Technology
www.timmons.com

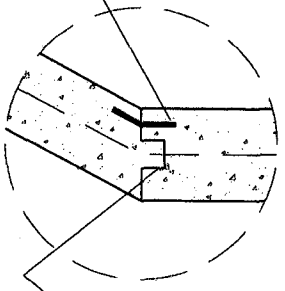

DETAIL A
NO SCALE

NOTE:
DOWELS TO BE LOCATED
AT ALL REQUIRED JOINTS

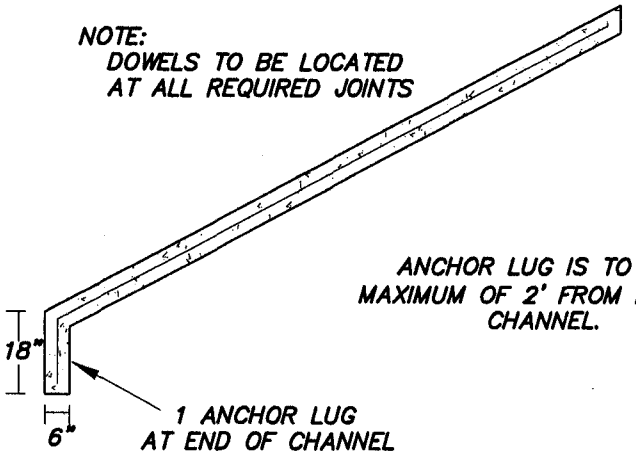

ANCHOR LUG IS TO BE A
MAXIMUM OF 2' FROM END OF
CHANNEL.

(SEE VDOT STD. PG-5 FOR ALL ANCHOR LUG DETAILS
NOT SHOWN HERE)

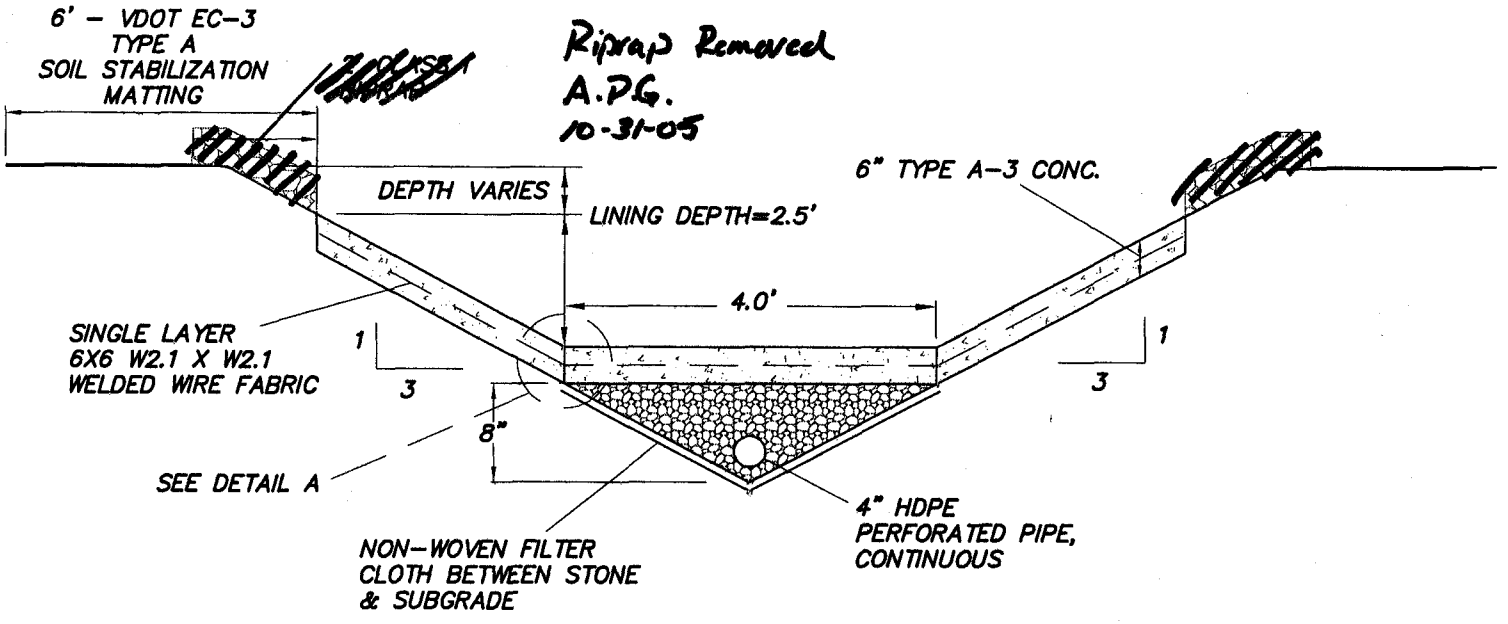

Riprap Removed
A.P.G.
10-31-05

VDOT STANDARD PG-5 PAVED CHANNEL
NO SCALE

VIRGINIA | NORTH CAROLINA | WEST VIRGINIA
THIS DRAWING PREPARED AT THE
COMPANY OFFICE
1001 Boulders Parkway, Suite 300 | Richmond, VA 23225
TEL 804.200.6500 FAX 804.560.1016 www.timmons.com

YOUR VISION ACHIEVED THROUGH OURS.

Site Development | Residential | Infrastructure | Technology

DATE	REVISION DESCRIPTION

TIMMONS GROUP

WARHILL SITE ROADWAYS AND IMPROVEMENTS
JAMES CITY COUNTY, VIRGINIA
TYPICAL SECTION CONCRETE CHANNEL

DATE	10/21/05
DRAWN BY	C.ALMARODE
DESIGNED BY	D.GOULD
CHECKED BY	D.GOULD
SCALE	NONE
JOB NO.	22303
SHEET NO.	1 OF 1

These plans and associated documents are the exclusive property of TIMMONS GROUP and may not be reproduced in whole or in part and shall not be used for any purpose whatsoever, inclusive, but not limited to construction, bidding, and/or construction staking without the express written consent of TIMMONS GROUP

72" OUTFALL
Below MH-16

Warhill Outfall Channel
Worksheet for Trapezoidal Channel

Project Description	
Project File	c:\haestad\academic\fmw\warhill.72o
Worksheet	Warhill 72-inch outfall ch (Asbuilt)
Flow Element	Trapezoidal Channel
Method	Manning's Formula
Solve For	Discharge

Input Data		
Mannings Coefficient	0.013	
Channel Slope	0.017500	ft/ft
Depth	2.50	ft
Left Side Slope	3.000000	H : V
Right Side Slope	3.000000	H : V
Bottom Width	4.00	ft

Asbuilt slope

Results		
Discharge	557.22	cfs
Flow Area	28.75	ft²
Wetted Perimeter	19.81	ft
Top Width	19.00	ft
Critical Depth	4.03	ft
Critical Slope	0.001982	ft/ft
Velocity	19.38	ft/s
Velocity Head	5.84	ft
Specific Energy	8.34	ft
Froude Number	2.78	
Flow is supercritical.		

Capacity of Channel

FULL FLOW VELOCITY

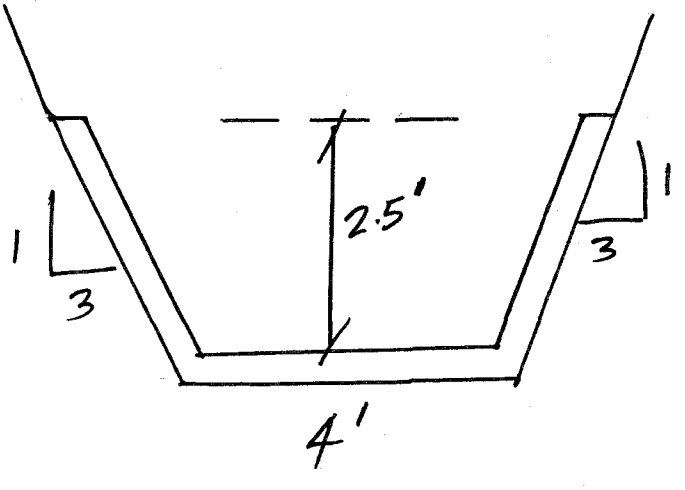

Scott Thomas

From: Andrew Gould [Andrew.Gould@timmons.com]
Sent: Saturday, January 07, 2006 12:57 PM
To: Telfer, Glenn; Scott Thomas
Cc: Paul Trapp; Bob Roop; Chris Kiefer; Bill Richards
Subject: Final Calcs to Warhill Storm Trunk

Glenn and Scott - Please find attached final calculations for the storm sewer trunk main for the Warhill tract based on the attached final drainage areas and c factors I received from CHA for the stadium.

I have shaded in gray all the numbers that were revised. As you can see, there is a very small impact to the hydraulic gradeline for the area below the Dominion crossing. However, as expected, there is no impact to the hydraulic gradeline for the areas above the Dominion easement.

In summary, the 10-year hydraulic gradeline is still contained within all inlets/manholes for the storm trunk.

If you have any questions, or if additional information is needed, please do not hesitate to contact me.

Drew

TIMMONS GROUP
YOUR VISION ACHIEVED THROUGH OURS.
Drew Gould, P.E.
1001 Boulders Parkway
Suite 300
Richmond, VA 23225
Tel: 804.200.6412
Fax: 804.560.1438
Cell: 804.334.9284
E-mail: andrew.gould@timmons.com
www.timmons.com

Check of Warhill PPEA
Storm Trunk Design for
County Stadium Drainage
(Stadium near final design)

Hydraulic Grade Line Analysis

N = 0.013 Job #: 21725 Project: Lightfoot/Warhill Drainage Study Date: 6/7/2005

Inlet Sta.	Outlet Water Surf. Elev.	Do	Qo	Lo	Sfo %	Hf	Junction Loss Vo	Ho	Qi	Vi	QiVi	Vi sq. / 2g	Hi	Ang.	H delta	Ht	1.30 Ht	0.50 Ht	Final H	Inlet Water Surf. Elev.	Rim Elev.
OUT	67.53	72	398	450	0.88%	3.97	11.60	0.52	387	11.60	4489.20	2.09	0.73			1.25		0.63	4.60	72.13	77.42
MH-16	72.13	72	387	405	0.84%	3.38	11.60	0.52	349	11.60	4048.40	2.09	0.73	15.00	0.21	1.46		0.73	4.11	76.24	82.23
MH-15	76.24	72	349	266	0.68%	1.81	11.60	0.52	336	11.60	3897.60	2.09	0.73			1.25		0.63	2.43	78.68	87.75
MH-14	78.68	72	336	295	0.63%	1.86	11.60	0.52	314	11.60	3642.40	2.09	0.73	30.00	0.59	1.84		0.92	2.78	81.45	89.78
MH-13	81.45	72	314	208	0.55%	1.14	11.60	0.52	306	11.60	3549.60	2.09	0.73			1.25		0.63	1.77	83.22	92.69
MH-12	83.22	72	306	360	0.52%	1.88	11.60	0.52	299	15.00	4485.00	3.49	1.22			1.75		0.87	2.75	85.98	104.63
MH-11	88.00	72	299	448	0.50%	2.23	15.00	0.87	296	9.50	2812.00	1.40	0.49			1.36		0.68	2.92	90.92	108.12
MH-10	90.92	72	296	247	0.49%	1.21	9.50	0.35	300	9.50	2850.00	1.40	0.49	15.00	0.14	0.98		0.49	1.70	92.62	107.13
MH-9	92.62	72	300	253	0.50%	1.27	9.50	0.35	204	9.50	1938.00	1.40	0.49	15.00	0.14	0.98		0.49	1.76	94.38	106.12
MH-8	94.38	60	204	157	0.61%	0.96	9.50	0.35	183	8.40	1537.20	1.10	0.38	15.00	0.11	0.84		0.42	1.38	95.76	105.49
MH-7	95.76	60	183	235	0.49%	1.16	8.40	0.27	164	8.40	1377.60	1.10	0.38			0.66		0.33	1.49	97.25	104.55
MH-6	97.25	60	164	233	0.40%	0.92	8.40	0.27	161	8.40	1352.40	1.10	0.38			0.66		0.33	1.25	98.51	103.61
MH-5	98.51	54	161	132	0.67%	0.88	8.40	0.27	143	7.80	1115.40	0.94	0.33	15.00	0.09	0.70		0.35	1.23	99.74	103.09
MH-4	99.74	54	143	332	0.53%	1.76	7.80	0.24	95	7.80	741.00	0.94	0.33			0.57		0.28	2.04	101.78	102.15
MH-3	101.78	54	95	208	0.23%	0.49	7.80	0.24	90	7.80	702.00	0.94	0.33			0.57		0.28	0.77	102.55	103.06
MH-2	102.55															0.00		0.00	0.00		

DRAINAGE AREA	FT^2	ACRE	IMPERVIOUS	PERVIOUS	Composite C	CA	tc (min.)
MH-12	74654	1.7	0.5	1.2	0.5	0.8	15
MH-13	148217	3.4	2.2	1.2	0.7	2.3	6
MH-14	175261	4.0	3.3	0.7	0.8	3.2	6
*MH-15	358002	8.2	6.3	1.9	0.8	6.2	19
Total Contributing to Trunk	**756134**	**17.4**	**12.3**	**5.1**	**0.7**	**12.6**	

* Includes impervious synthetic field area

FINAL L-ROAD, HS ACCESS ROAD
and Storm Trunk Computations

(and West Pond Forebay PC105 comps)

RECEIVED JUL 29 2005

James City County

PPEA

Stormwater Calculations

COMMONWEALTH OF VIRGINIA
ANDREW P. GOULD
NO. 030591
7-29-05
PROFESSIONAL ENGINEER

Hydrology Calculations

STORM SEWER DESIGN COMPUTATIONS

J.N. 22303 **PROJECT** ppea-james city county- centerville road drainage

L&D 229 COUNTY james city county

STORM SEWER DESIGN COMPUTATIONS

DESIGNED BY MBP 7/27/2005

CHECKED BY DATE 7/27/2005

FROM	TO	AREA DRAIN. "A"	RUN-OFF COEF.	CA INCRE-MENT	CA ACCUM-ULATED	INLET TIME tc	RAIN-FALL I-10 yr.	RUN-OFF Q	INV. ELEV. IN	INV. ELEV. OUT	LEN.	SLOPE	DIA.	FULL FLOW RATE	VEL. 10 yr.	FLOW TIME	RUN-OFF 100 yr.	VEL. 100 yr.
		acres	C			min.	in/hr	c.f.s.	IN	OUT	ft.	%	in.	c.f.s.	f.p.s.	min.	c.f.s.	f.p.s.
1	2	3	4	5	6	7	8	9	10	11	12	13	14	15	16	17	18	19
							#N/A	**#N/A**								#DIV/0!	#N/A	
																#DIV/0!	#N/A	
																#DIV/0!	#N/A	
																#DIV/0!	#N/A	
																#DIV/0!	#N/A	
																#DIV/0!	#N/A	
																#DIV/0!	#N/A	
																#DIV/0!		
																#DIV/0!	#N/A	
																#DIV/0!	#N/A	
5-6	5-7	0.19	0.9	0.17	0.17	5	7.1	**1.2**	103.00	102.60	30	1.33%	15	6.9	3.5	0.1	**2.1**	
5-7	MH-2	0.001	0.9	0.00	1.03	9	6.5	**6.7**	98.60	96.00	106	2.45%	15	10.8	7.8	0.2	**11.6**	
																#DIV/0!	#N/A	
																#DIV/0!	#N/A	
																#DIV/0!	#N/A	
																	#N/A	
5-4	5-5	0.29	0.9	0.26	1.71	12	5.7	**9.7**	97.25	97.15	12	0.83%	24	10.3	6.1	0.0	**16.9**	
																	#N/A	
5-5	MH-2	17.1	0.9	15.39	17.10	12	5.7	**97.5**	95.19	94.65	100	0.54%	48	113.7	9.5	0.2	**168.9**	

STORM SEWER DESIGN COMPUTATIONS

J.N. 22303

PROJECT WARHILL SITE ROADWAYS AND IMPROVEMENTS

COUNTY JAMES CITY COUNTY -PPEA

L&D 229

STORM SEWER DESIGN COMPUTATIONS

												DESIGNED BY	MBP				6/6/2005		
												CHECKED BY				DATE	6/6/2005		
FROM	TO	AREA DRAIN. "A"	RUN-OFF COEF.	CA INCRE-MENT	CA ACCUM-ULATED	INLET TIME tc	RAIN-FALL I-10 yr.	RUN-OFF Q	INV. ELEV. IN	INV. ELEV. OUT	LEN.	SLOPE	DIA.	FULL FLOW RATE	VEL. 10 yr.	FLOW TIME	RUN-OFF 100 yr.	VEL. 100 yr.
		acres	C			min.	in/hr	c.f.s.			ft.	%	in.	c.f.s.	f.p.s.	min.	c.f.s.	f.p.s.
1	2	3	4	5	6	7	8	9	10	11	12	13	14	15	16	17	18	19
							#N/A	#N/A								#DIV/0!	#N/A	
5-8	5-11	0.4	0.9	0.36	0.36	5	7.1	**2.6**	97.45	96.99	46	1.00%	15	7.0	4.5	0.2	**4.5**	
5-9	5-11	0.3	0.9	0.27	0.27	5	7.1	**1.9**	97.45	96.99	46	1.00%	15	7.0	4.1	0.2	**3.4**	
5-10	5-11	15.8	0.5	7.90	7.90	10	6	**47.4**	94.82	94.42	40	1.00%	36	24.4	71.9	0.0	**83.0**	
					8.53													
5-11	MH-3	0.12	0.9	0.11	8.64	10	6	**51.8**	93.74	93.42	32	1.00%	36	24.4	71.9	0.0	**90.7**	
5-12	5-14	0.28	0.9	0.25	0.25	5	7.1	**1.8**	97.45	96.99	46	1.00%	15	7.0	3.9	0.2	**3.2**	
5-13	5-14	0.3	0.9	0.27	0.27	5	7.1	**1.9**	97.45	96.99	46	1.00%	15	7.0	4.1	0.2	**3.4**	
					0.47													
5-14	MH-3	0.12	0.9	0.11	0.58	5	7.1	**4.1**	96.89	96.57	32	1.00%	15	7.0	4.9	0.1	**7.2**	
5-15	5-16	3.9	0.9	3.51	3.51	10	6	**21.1**	95.75	95.43	32	1.00%	24	24.4	8.4	0.1	**36.9**	
5-16	MH-4	0.12	0.9	0.11	3.62	10	6	**21.7**	93.32	93.00	32	1.00%	24	24.4	8.1	0.1	**38.0**	
5-17	MH-4	0.15	0.9	0.14	0.14	5	7.1	**1.0**	98.66	98.34	32	1.00%	15	7.0	3.0	0.2	**1.7**	

STORM SEWER DESIGN COMPUTATIONS

J.N. 22303 **PROJECT** WARHILL SITE ROADWAYS AND IMPROVEMENTS

L&D 229 COUNTY JAMES CITY COUNTY - PPEA

STORM SEWER DESIGN COMPUTATIONS

DESIGNED BY MBP 7/27/2005

CHECKED BY DATE 7/27/2005

FROM	TO	AREA DRAIN. "A" acres	RUN-OFF COEF. C	CA INCRE-MENT	CA ACCUM-ULATED	INLET TIME tc min.	RAIN-FALL I-10 yr. in/hr	RUN-OFF Q c.f.s.	INV. ELEV. IN	INV. ELEV. OUT	LEN. ft.	SLOPE %	DIA. in.	FULL FLOW RATE c.f.s.	VEL. 10 yr. f.p.s.	FLOW TIME min.	RUN-OFF 100 yr. c.f.s.	VEL. 100 yr. f.p.s.
1	2	3	4	5	6	7	8	9	10	11	12	13	14	15	16	17	18	19
							#N/A	#N/A								#DIV/0!	#N/A	
6-1	6-2	0.44	0.9	0.40	0.40	5	7.1	**2.8**	99.04	98.80	24	1.00%	15	7.0	4.0	0.1	**5.0**	
6-2	MH-5	0.31	0.9	0.28	0.68	5	7.1	**4.8**	96.70	96.38	32	1.00%	15	7.0	5.0	0.1	**8.4**	
6-3	MH-5	0.26	0.9	0.23	0.23	5	7.1	**1.7**	99.18	98.79	39	1.00%	15	7.0	3.7	0.2	**2.9**	
6-4	MH-6	4.67	0.9	4.20	4.20	5	7.1	**29.8**	95.50	95.00	50	1.00%	30	44.2	9.0	0.1	**52.5**	
6-5	6-6	6.1	0.5	3.05	3.05	10	6	**18.3**	95.58	95.50	8	1.00%	24	24.4	7.8	0.0	**32.0**	
6-6	MH-6	0.25	0.9	0.23	3.28	10	6	**19.7**	95.40	95.00	32	1.25%	24	24.4	7.8	0.1	**34.4**	
6-7	MH-7	3.5	0.9	3.15	3.15	5	7.1	**22.4**	97.50	97.00	50	1.00%	24	24.4	8.3	0.1	**39.4**	
6-8	MH-7	0.27	0.9	0.24	0.24	5	7.1	**1.7**	101.05	100.73	32	1.00%	15	7.0	3.7	0.1	**3.0**	
6-9	6-11	1.34	0.9	1.21	1.21	5	7.1	**8.6**	100.86	100.50	36	1.00%	18	11.3	6.2	0.1	**15.1**	
					16.99													
6-10	6-11	1.26	0.9	1.13	18.12	16	5.1	**92.4**	96.55	95.97	64	0.91%	42	103.4	11.6	0.1	**160.9**	
6-11	MH-8	0.23	0.9	0.21	18.33	16	5.1	**93.5**	95.87	95.08	88	0.90%	42	102.8	11.3	0.1	**162.7**	
6-12	MH-8	0.2	0.9	0.18	0.18	5	7.1	**1.3**	101.60	101.26	34	1.00%	15	7.0	3.8	0.1	**2.3**	

STORM SEWER DESIGN COMPUTATIONS

J.N. 22303 **PROJECT** WARHILL SITE ROADWAYS AND IMPROVEMENTS

L&D 229 COUNTY JAMES CITY COUNTY - PPEA

STORM SEWER DESIGN COMPUTATIONS

DESIGNED BY MBP 7/27/2005

CHECKED BY DATE 7/27/2005

FROM	TO	AREA DRAIN. "A"	RUN-OFF COEF.	CA INCRE-MENT	CA ACCUM-ULATED	INLET TIME tc	RAIN-FALL I-10 yr.	RUN-OFF Q	INV. ELEV. IN	INV. ELEV. OUT	LEN.	SLOPE	DIA.	FULL FLOW RATE	VEL. 10 yr.	FLOW TIME	RUN-OFF 100 yr.	VEL. 100 yr.
		acres	C			min.	in/hr	c.f.s.	IN	OUT	ft.	%	in.	c.f.s.	f.p.s.	min.	c.f.s.	f.p.s.
1	2	3	4	5	6	7	8	9	10	11	12	13	14	15	16	17	18	19
							#N/A	#N/A								#DIV/0!	#N/A	
7-1	7-2	3.53	0.65	2.29	2.29	15	5.2	**11.9**	107.11	104.37	228	1.20%	18	12.4	7.3	0.5	**20.7**	
7-2	7-4	0.31	0.9	0.28	2.57	15	5.2	**13.4**	104.27	102.32	130	1.50%	18	13.9	11.9	0.2	**23.2**	
7-3	7-4	14.78	0.72	10.64	10.64	10	6	**63.8**	102.68	102.32	36	1.00%	36	71.9	11.0	0.1	**111.7**	
					13.21													
7-4	7-6	0.16	0.9	0.14	13.35	16	5.1	**68.1**	102.22	99.18	304	1.00%	36	71.9	10.8	0.5	**118.5**	
7-5	7-6	5.11	0.65	3.32	3.32	10	6	**19.9**	103.26	102.90	36	1.00%	24	24.4	7.9	0.1	**34.9**	
					16.67													
7-6	6-10	0.36	0.9	0.32	16.99	16	5.1	**86.7**	99.08	95.66	228	1.50%	36	88.0	13.3	0.3	**150.8**	

J.N.: PPEA

No High School - 72" Max.

PROJECT Revised Alignment for PPEA
TNCC using Regional Approach &
High School using On-Site SWM

L&D 229

PRELIMINARY
STORM SEWER DESIGN COMPUTATIONS

COUNTY **James City**

DESIGNED BY APG DATE 6/9/05
CHECKED BY APG DATE

n= 0.013

FROM	TO	AREA DRAIN. "A" acres	RUN-OFF COEF. C	CA INCRE-MENT	CA ACCUM-ULATED	INLET TIME tc min.	RAIN-FALL I-10 yr. in/hr	RUN-OFF Q c.f.s.	INV. UPPER END	INV. LOWER END	LEN. ft.	SLOPE ft./ft.	DIA. in.	CAPA-CITY c.f.s.	VEL. 10 yr. f.p.s.	FLOW TIME min.
1	2	3	4	5	6	7	8	9	10	11	12	13	14	15	16	17
Single-Pipe System - Under Utilities																
Cent-East	MH-2	1.16	0.9	1.04	1.04	9	6.2	6.47								
Outlet	MH-2	18.50	0.9	16.65	16.65	12	5.8	96.57			0	0.0000	36			
Cent-West	MH-2	0.76	0.9	0.68	0.68	7	6.6	4.51			0	0.0000	36			
MH-2	MH-3	0.68	0.9	0.61	18.99	16.0	5.0	94.95			208	0.0040	54	124.38	7.8	0.443
MH-3	MH-4	16.04	0.61	9.78	28.77	16.4	5.0	143.87			332	0.0040	54	124.38	7.8	0.708
MH-4	MH-5	4.60	0.9	4.14	32.91	17.2	4.9	161.28			132	0.0040	54	124.38	7.8	0.282
MH-5	MH-6	0.71	0.9	0.64	33.55	17.4	4.9	164.41			233	0.0040	60	164.73	8.4	0.462
MH-6	MH-7	6.67	0.7	4.67	38.22	17.9	4.8	183.47			235	0.0040	60	164.73	8.4	0.466
MH-7	MH-8	5.97	0.9	5.37	43.60	18.4	4.7	204.90			157	0.0040	60	164.73	8.4	0.312
MH-8	MH-9	25.43	0.8	20.34	63.94	18.7	4.7	300.52			253	0.0040	72	267.89	9.5	0.444
MH-9	MH-10	0.65	0.9	0.59	64.52	19.1	4.6	296.81			247	0.0040	72	267.89	9.5	0.433
MH-10	MH-11	0.65	0.9	0.59	65.11	19.6	4.6	299.50			448	0.0040	72	267.89	9.5	0.786
MH-11	MH-12	5.90	0.5	2.95	68.06	20.3	4.5	306.27			360	~~0.0353~~ 0.0339	72	795.81	15.0	0.400
MH-12	MH-13	6.80	0.5	3.40	71.46	20.7	4.4	314.42			208	0.0060	72	328.09	11.6	0.299
MH-13	MH-14	5.30	0.8	4.24	75.70	21.0	4.4	333.08			295	0.0060	72	328.09	11.6	0.424
MH-14	MH-15	5.20	0.8	4.16	79.86	21.5	4.3	343.40			266	0.0060	72	328.09	11.6	0.382
MH-15	MH-16	9.50	0.8	7.60	87.46	21.8	4.3	376.08			405	0.0060	72	328.09	11.6	0.582
MH-16	EW-2	9.40	0.5	4.70	92.16	22.4	4.2	387.07			450	0.0060	72	328.09	11.6	0.647
EW-2	OUT	10.30	0.5	5.15	97.31	23.0	4.1	398.97			232	0.0145		311.07		

APG 7-27-05

Hydraulic Calculations

Hydraulic Grade Line Calculations

Mannings N Value: 0.013 Job #: Project: Prepared by:

Inlet Sta.	Inlet Q	Outfall Invert Elev.	Outlet Water Surf. Elev.	Do	Qo	Lo	Sfo %	Hf	Junction Loss Vo	Ho	Qi	Vi	QiVi	Vi sq. 2g	Hi	Ang.	H delta	Ht	1.30 Ht	0.50 Ht	Final H	Inlet Water Surf. Elev.	Rim Elev.
5-7	0.01	96.00	97.00	15"	6.7	106.0	1.08%	1.14	7.8	0.24	5.6	7.6	42.6	0.90	0.31	20	0.14	0.69			1.83	98.83	107.78
5.4-8	0.01	101.60	102.60	15"	5.6	216.0	0.75%	1.62	7.6	0.22	4.8	7.9	37.9	0.97	0.34			0.56			2.19	104.79	110.70
5.4-6	0.01	106.20	107.20	15"	4.8	216.0	0.55%	1.19	7.9	0.24	3.9	6.4	25.0	0.64	0.22			0.46			1.66	108.86	116.01
5.6-3	0.96	111.70	112.70	15"	3.9	152.0	0.36%	0.55	6.4	0.16	2.7	4.3	11.6	0.29	0.10			0.26	0.34		0.89	113.59	120.60
5.6-2	0.38	115.90	116.90	15"	2.7	195.0	0.17%	0.34	4.3	0.07	1.3	3.7	4.8	0.21	0.07			0.15			0.49	117.39	124.74
5.6-1	1.28	118.00	119.00	15"	1.3	300.0	0.04%	0.12	3.7	0.05								0.05	0.07		0.19	119.19	125.89
5.4-7	1.10	106.20	107.20	15"	1.1	30.0	0.03%	0.01	3.3	0.04								0.04	0.05		0.06	107.26	109.81
5.4-5	0.90	111.70	112.70	15"	0.9	30.0	0.02%	0.01	2.7	0.03								0.03	0.04		0.04	112.74	115.34
5-6	1.20	101.60	102.60	15"	1.2	40.0	0.03%	0.01	3.5	0.05								0.05	0.06		0.08	102.68	106.85
5-5	0.01	94.65	97.85	48"	97.3	100.0	0.46%	0.46	9.5	0.35	41.0	9.0	369.0	1.26	0.44			0.79		0.40	0.85	98.70	103.20
5-2	0.01	98.30	100.30	30"	41.0	32.0	1.00%	0.32	9.0	0.31								0.31		0.16	0.48	100.78	103.20
5-4	1.84	97.15	98.75	24"	9.7	12.0	0.18%	0.02	6.1	0.14	5.7	5.9	33.6	0.54	0.19			0.33		0.17	0.19	98.94	103.03
5-3	0.00	98.53	99.53	15"	5.7	32.0	0.78%	0.25	5.9	0.14								0.14		0.07	0.32	99.85	103.03
5.4-9	2.41	96.37	97.37	15"	3.9	138.0	0.36%	0.50	3.4	0.04	1.6	2.8	4.6	0.12	0.04			0.09	0.11	0.06	0.56	97.93	101.80
5.2-1	1.63	97.16	98.16	15"	1.6	185.0	0.06%	0.12	2.8	0.03								0.03	0.04	0.02	0.14	98.30	101.43

Hydraulic Grade Line Calculations

Mannings N Value: 0.013 Job #: Project: Prepared by:

Inlet Sta.	Inlet Q	Outfall Invert Elev.	Outlet Water Surf. Elev.	Do	Qo	Lo	Sfo %	Hf	Junction Loss Vo	Ho	Qi	Vi	QiVi	Vi sq. 2g	Hi	Ang.	H delta	Ht	1.30 Ht	0.50 Ht	Final H	Inlet Water Surf. Elev.	Rim Elev.
6-11	1.57	95.08	97.88	42"	93.5	88.0	0.86%	0.76	11.3	0.50	92.4	11.6	1071.8	2.09	0.73			1.23		0.61	1.37	99.25	104.98
6-10	1.66	95.97	99.25	42"	92.4	64.0	0.84%	0.54	11.6	0.52	86.7	13.3	1153.1	2.75	0.96			1.48		0.74	1.28	100.54	106.13
7-6	2.30	95.66	100.54	36"	86.7	228.0	1.69%	3.85	13.3	0.69	68.1	10.8	735.5	1.81	0.63			1.32		0.66	4.51	105.05	107.86
7-4	1.02	99.18	105.05	36"	68.1	304.0	1.04%	3.17	10.8	0.45	63.8	11.0	701.8	1.88	0.66	90	1.33	2.44		1.22	4.39	109.44	110.00
7-3	2.36	102.32	109.44	36"	63.8	36.0	0.91%	0.33	11.0	0.47						90		0.47		0.23	0.56	110.00	110.00
7-2	1.98	102.32	103.52	18"	13.4	130.0	1.63%	2.12	13.4	0.70	11.9	11.9	141.6	2.20	0.77			1.47		0.73	2.85	106.37	110.93
7-1	2.00	104.37	106.37	18"	11.9	228.0	1.28%	2.93	11.9	0.55	10.0							0.55		0.27	3.20	109.57	112.00
7-5	2.00	102.90	104.50	24"	19.9	36.0	0.77%	0.28	19.9	1.54	18.0							1.54		0.77	1.05	105.55	107.86
6-9	2.00	100.50	101.70	18"	8.6	36.0	0.67%	0.24	8.6	0.29	7.0							0.29	0.37	0.19	0.43	102.13	106.13

Hydraulic Grade Line Analysis

N = 0.013 Job #: 21725 Project: Lightfoot/Warhill Drainage Study Date: 6/7/2005

Inlet Sta.	Outlet Water Surf. Elev.	Do	Qo	Lo	Sfo %	Hf	Junction Loss Vo	Ho	Qi	Vi	QiVi	Vi sq. / 2g	Hi	Ang.	H delta	Ht	1.30 Ht	0.50 Ht	Final H	Inlet Water Surf. Elev.	Rim Elev.
OUT	67.53	72	387	450	0.84%	3.76	11.60	0.52	376	11.60	4361.60	2.09	0.73			1.25		0.63	4.38	71.91	77.42
MH-16	71.91	72	376	405	0.79%	3.19	11.60	0.52	343	11.60	3978.80	2.09	0.73	15.00	0.21	1.46		0.73	3.92	75.84	82.23
MH-15	75.84	72	343	266	0.66%	1.74	11.60	0.52	333	11.60	3862.80	2.09	0.73			1.25		0.63	2.37	78.21	87.75
MH-14	78.21	72	333	295	0.62%	1.82	11.60	0.52	314	11.60	3642.40	2.09	0.73	30.00	0.59	1.84		0.92	2.74	80.95	89.78
MH-13	80.95	72	314	208	0.55%	1.14	11.60	0.52	306	11.60	3549.60	2.09	0.73			1.25		0.63	1.77	82.72	92.69
MH-12	82.72	72	306	360	0.52%	1.88	11.60	0.52	299	15.00	4485.00	3.49	1.22			1.75		0.87	2.75	85.48	104.63
MH-11	88.00	72	299	448	0.50%	2.23	15.00	0.87	296	9.50	2812.00	1.40	0.49			1.36		0.68	2.92	90.92	108.12
MH-10	90.92	72	296	247	0.49%	1.21	9.50	0.35	300	9.50	2850.00	1.40	0.49	15.00	0.14	0.98		0.49	1.70	92.62	107.13
MH-9	92.62	72	300	253	0.50%	1.27	9.50	0.35	204	9.50	1938.00	1.40	0.49	15.00	0.14	0.98		0.49	1.76	94.38	106.12
MH-8	94.38	60	204	157	0.61%	0.96	9.50	0.35	183	8.40	1537.20	1.10	0.38	15.00	0.11	0.84		0.42	1.38	95.76	105.49
MH-7	95.76	60	183	235	0.49%	1.16	8.40	0.27	164	8.40	1377.60	1.10	0.38			0.66		0.33	1.49	97.25	104.55
MH-6	97.25	60	164	233	0.40%	0.92	8.40	0.27	161	8.40	1352.40	1.10	0.38			0.66		0.33	1.25	98.51	103.61
MH-5	98.51	54	161	132	0.67%	0.88	8.40	0.27	143	7.80	1115.40	0.94	0.33	15.00	0.09	0.70		0.35	1.23	99.74	103.09
MH-4	99.74	54	143	332	0.53%	1.76	7.80	0.24	95	7.80	741.00	0.94	0.33			0.57		0.28	2.04	101.78	102.15
MH-3	101.78	54	95	208	0.23%	0.49	7.80	0.24	90	7.80	702.00	0.94	0.33			0.57		0.28	0.77	102.55	103.06
MH-2	102.55															0.00		0.00	0.00		

Inlet Spread Calculations

PROJECT 22303
HEC12 Version: V70112.2 User S/N: 77010018 Run Date: 05-27-2005

==========

INLET NUMBER 5-6 LENGTH 10.0 STATION 315+00

DRAINAGE AREA = 0.190 ACRES C VALUE = .900 CA = 0.171
SUM CA= 0.171 INT= 4.00 CFS= 0.684 CO= 0.000 GUTTER FLOW= 0.684

GUTTER SLOPE = 0.0174 FT/FT PAVEMENT CROSS SLOPE = 0.0130 FT/FT

SPREAD	W	W/T	SW	SW/SX	Eo	a	S'W	SE
7.24	1.0	0.14	0.0130	1.0	0.33	1.0	0.083	0.040

XXXXXXXXXX CURB INLET ON A CONTINUOUS GRADE XXXXXXXXXX
REQUIRED LENGTH= 12.9 EFFICIENCY= 0.93
CFS INTERCEPTED= 0.64 CFS CARRYOVER= 0.05

PROJECT 22303RD
HEC12 Version: V70112.2 User S/N: 77010018 Run Date: 04-14-2005

==========

INLET NUMBER 5-8 LENGTH 8.0 STATION 5-8

DRAINAGE AREA = 0.400 ACRES C VALUE = .900 CA = 0.360
SUM CA= 0.360 INT= 7.10 CFS= 2.556 CO= 0.000 GUTTER FLOW= 2.556

GUTTER SLOPE = 0.0040 FT/FT PAVEMENT CROSS SLOPE = 0.0200 FT/FT

SPREAD	W	W/T	SW	SW/SX	Eo	a	S'W	SE
10.91	2.0	0.18	0.0833	4.2	0.53	3.5	0.147	0.098

XXXXXXXXXX CURB INLET ON A CONTINUOUS GRADE XXXXXXXXXX
REQUIRED LENGTH= 8.5 EFFICIENCY= 0.99
CFS INTERCEPTED= 2.54 CFS CARRYOVER= 0.02

==========

INLET NUMBER 5-8 LENGTH 8.0 STATION 5-8

DRAINAGE AREA = 0.400 ACRES C VALUE = .900 CA = 0.360
SUM CA= 0.360 INT= 4.00 CFS= 1.440 CO= 0.000 GUTTER FLOW= 1.440

GUTTER SLOPE = 0.0040 FT/FT PAVEMENT CROSS SLOPE = 0.0200 FT/FT

SPREAD	W	W/T	SW	SW/SX	Eo	a	S'W	SE
8.34	2.0	0.24	0.0833	4.2	0.66	3.5	0.147	0.117

XXXXXXXXXX CURB INLET ON A CONTINUOUS GRADE XXXXXXXXXX
REQUIRED LENGTH= 6.0 EFFICIENCY= 1.00
CFS INTERCEPTED= 1.44 CFS CARRYOVER= 0.00

==========

INLET NUMBER 5-9 LENGTH 6.0 STATION 5-9

DRAINAGE AREA = 0.300 ACRES C VALUE = .900 CA = 0.270
SUM CA= 0.270 INT= 4.00 CFS= 1.080 CO= 0.000 GUTTER FLOW= 1.080

GUTTER SLOPE = 0.0040 FT/FT PAVEMENT CROSS SLOPE = 0.0200 FT/FT

SPREAD	W	W/T	SW	SW/SX	Eo	a	S'W	SE
7.19	2.0	0.28	0.0833	4.2	0.73	3.5	0.147	0.128

XXXXXXXXXX CURB INLET ON A CONTINUOUS GRADE XXXXXXXXXX
REQUIRED LENGTH= 5.1 EFFICIENCY= 1.00
CFS INTERCEPTED= 1.08 CFS CARRYOVER= 0.00

```
==============================================================================
INLET NUMBER 5-11            LENGTH   6.0        STATION  5-11

DRAINAGE AREA =  0.060 ACRES       C VALUE = .900       CA =  0.054
DRAINAGE AREA =  0.060 ACRES       C VALUE = .900       CA =  0.054
SUM CA=   0.108 INT=  7.10  CFS=   0.767  CO=  0.000 GUTTER FLOW=   0.767

GUTTER SLOPE = 0.0010 FT/FT       PAVEMENT CROSS SLOPE =  0.0200 FT/FT


     SPREAD AT A SLOPE OF .001 (ft./ft.) IS  5.92 (ft.)

       XXXXXXXXXX CURB INLET IN A SUMP XXXXXXXXXX
      P EFFEC. LENGTH =  9.60                  H = 0.460
      DEPTH OF WATER  = 0.11              SPREAD =  5.32
```

```
==============================================================================
INLET NUMBER 5-12              LENGTH   8.0          STATION  5-12

DRAINAGE AREA =  0.280 ACRES        C VALUE = .900        CA =  0.252
SUM CA=   0.252 INT=  7.10  CFS=   1.789  CO=  0.000 GUTTER FLOW=   1.789

GUTTER SLOPE = 0.0040 FT/FT        PAVEMENT CROSS SLOPE =  0.0200 FT/FT

SPREAD      W      W/T      SW        SW/SX       Eo       a      S'W      SE
  9.26     2.0     0.22   0.0833      4.2       0.61     3.5    0.147   0.109

      XXXXXXXXXX CURB INLET ON A CONTINUOUS GRADE XXXXXXXXXX
    REQUIRED LENGTH=  6.9                EFFICIENCY= 1.00
    CFS INTERCEPTED=  1.79            CFS CARRYOVER=  0.00


==============================================================================
INLET NUMBER 5-12              LENGTH   8.0          STATION  5-12

DRAINAGE AREA =  0.280 ACRES        C VALUE = .900        CA =  0.252
SUM CA=   0.252 INT=  4.00  CFS=   1.008  CO=  0.000 GUTTER FLOW=   1.008

GUTTER SLOPE = 0.0040 FT/FT        PAVEMENT CROSS SLOPE =  0.0200 FT/FT

SPREAD      W      W/T      SW        SW/SX       Eo       a      S'W      SE
  6.93     2.0     0.29   0.0833      4.2       0.75     3.5    0.147   0.130

      XXXXXXXXXX CURB INLET ON A CONTINUOUS GRADE XXXXXXXXXX
    REQUIRED LENGTH=  4.9                EFFICIENCY= 1.00
    CFS INTERCEPTED=  1.01            CFS CARRYOVER=  0.00
```

==========

INLET NUMBER 5-13 LENGTH 6.0 STATION 5-13

DRAINAGE AREA = 0.300 ACRES C VALUE = .900 CA = 0.270
SUM CA= 0.270 INT= 4.00 CFS= 1.080 CO= 0.000 GUTTER FLOW= 1.080

GUTTER SLOPE = 0.0040 FT/FT PAVEMENT CROSS SLOPE = 0.0200 FT/FT

SPREAD	W	W/T	SW	SW/SX	Eo	a	S'W	SE
7.19	2.0	0.28	0.0833	4.2	0.73	3.5	0.147	0.128

XXXXXXXXXX CURB INLET ON A CONTINUOUS GRADE XXXXXXXXXX
REQUIRED LENGTH= 5.1 EFFICIENCY= 1.00
CFS INTERCEPTED= 1.08 CFS CARRYOVER= 0.00

PROJECT 22303RD
HEC12 Version: V70112.2 User S/N: 77010018 Run Date: 04-14-2005

==========

INLET NUMBER 5-14 LENGTH 6.0 STATION 5-14

DRAINAGE AREA = 0.060 ACRES C VALUE = .900 CA = 0.054
DRAINAGE AREA = 0.060 ACRES C VALUE = .900 CA = 0.054
SUM CA= 0.108 INT= 7.10 CFS= 0.767 CO= 0.000 GUTTER FLOW= 0.767

GUTTER SLOPE = 0.0010 FT/FT PAVEMENT CROSS SLOPE = 0.0200 FT/FT

SPREAD AT A SLOPE OF .001 (ft./ft.) IS 5.92 (ft.)

XXXXXXXXXX CURB INLET IN A SUMP XXXXXXXXXX
P EFFEC. LENGTH = 9.60 H = 0.460
DEPTH OF WATER = 0.11 SPREAD = 5.32

==========

INLET NUMBER 5-16 LENGTH 4.0 STATION 5-16

DRAINAGE AREA = 0.120 ACRES C VALUE = .900 CA = 0.108
SUM CA= 0.108 INT= 4.00 CFS= 0.432 CO= 0.000 GUTTER FLOW= 0.432

GUTTER SLOPE = 0.0040 FT/FT PAVEMENT CROSS SLOPE = 0.0200 FT/FT

SPREAD	W	W/T	SW	SW/SX	Eo	a	S'W	SE
3.95	2.0	0.51	0.0833	4.2	0.95	3.5	0.147	0.159

XXXXXXXXXX CURB INLET ON A CONTINUOUS GRADE XXXXXXXXXX
REQUIRED LENGTH= 3.0 EFFICIENCY= 1.00
CFS INTERCEPTED= 0.43 CFS CARRYOVER= 0.00

==========

INLET NUMBER 5-17 LENGTH 4.0 STATION 5-17

DRAINAGE AREA = 0.150 ACRES C VALUE = .900 CA = 0.135
SUM CA= 0.135 INT= 4.00 CFS= 0.540 CO= 0.000 GUTTER FLOW= 0.540

GUTTER SLOPE = 0.0040 FT/FT PAVEMENT CROSS SLOPE = 0.0200 FT/FT

SPREAD	W	W/T	SW	SW/SX	Eo	a	S'W	SE
4.70	2.0	0.43	0.0833	4.2	0.91	3.5	0.147	0.153

XXXXXXXXXX CURB INLET ON A CONTINUOUS GRADE XXXXXXXXXX
REQUIRED LENGTH= 3.4 EFFICIENCY= 1.00
CFS INTERCEPTED= 0.54 CFS CARRYOVER= 0.00

==========

INLET NUMBER 6-1 LENGTH 6.0 STATION 6-1

DRAINAGE AREA = 0.310 ACRES C VALUE = .900 CA = 0.279
SUM CA= 0.279 INT= 4.00 CFS= 1.116 CO= 0.000 GUTTER FLOW= 1.116

GUTTER SLOPE = 0.0040 FT/FT PAVEMENT CROSS SLOPE = 0.0200 FT/FT

SPREAD	W	W/T	SW	SW/SX	Eo	a	S'W	SE
7.32	2.0	0.27	0.0833	4.2	0.73	3.5	0.147	0.126

XXXXXXXXXX CURB INLET ON A CONTINUOUS GRADE XXXXXXXXXX
REQUIRED LENGTH= 5.2 EFFICIENCY= 1.00
CFS INTERCEPTED= 1.12 CFS CARRYOVER= 0.00

==========

INLET NUMBER 6-2 LENGTH 6.0 STATION 6-2

DRAINAGE AREA = 0.310 ACRES C VALUE = .900 CA = 0.279
SUM CA= 0.279 INT= 4.00 CFS= 1.116 CO= 0.000 GUTTER FLOW= 1.116

GUTTER SLOPE = 0.0040 FT/FT PAVEMENT CROSS SLOPE = 0.0200 FT/FT

SPREAD	W	W/T	SW	SW/SX	Eo	a	S'W	SE
7.32	2.0	0.27	0.0833	4.2	0.73	3.5	0.147	0.126

XXXXXXXXXX CURB INLET ON A CONTINUOUS GRADE XXXXXXXXXX
REQUIRED LENGTH= 5.2 EFFICIENCY= 1.00
CFS INTERCEPTED= 1.12 CFS CARRYOVER= 0.00

==========

INLET NUMBER 6-3 LENGTH 6.0 STATION 6-3

DRAINAGE AREA = 0.260 ACRES C VALUE = .900 CA = 0.234
SUM CA= 0.234 INT= 4.00 CFS= 0.936 CO= 0.000 GUTTER FLOW= 0.936

GUTTER SLOPE = 0.0040 FT/FT PAVEMENT CROSS SLOPE = 0.0200 FT/FT

SPREAD	W	W/T	SW	SW/SX	Eo	a	S'W	SE
6.65	2.0	0.30	0.0833	4.2	0.77	3.5	0.147	0.133

XXXXXXXXXX CURB INLET ON A CONTINUOUS GRADE XXXXXXXXXX
REQUIRED LENGTH= 4.6 EFFICIENCY= 1.00
CFS INTERCEPTED= 0.94 CFS CARRYOVER= 0.00

==========

INLET NUMBER 6-6 LENGTH 6.0 STATION 6-6

DRAINAGE AREA = 0.250 ACRES C VALUE = .900 CA = 0.225
SUM CA= 0.225 INT= 4.00 CFS= 0.900 CO= 0.000 GUTTER FLOW= 0.900

GUTTER SLOPE = 0.0040 FT/FT PAVEMENT CROSS SLOPE = 0.0200 FT/FT

SPREAD	W	W/T	SW	SW/SX	Eo	a	S'W	SE
6.51	2.0	0.31	0.0833	4.2	0.78	3.5	0.147	0.134

XXXXXXXXXX CURB INLET ON A CONTINUOUS GRADE XXXXXXXXXX
REQUIRED LENGTH= 4.5 EFFICIENCY= 1.00
CFS INTERCEPTED= 0.90 CFS CARRYOVER= 0.00

==========

INLET NUMBER 6-8 LENGTH 6.0 STATION 6-8

DRAINAGE AREA = 0.270 ACRES C VALUE = .900 CA = 0.243
SUM CA= 0.243 INT= 4.00 CFS= 0.972 CO= 0.000 GUTTER FLOW= 0.972

GUTTER SLOPE = 0.0040 FT/FT PAVEMENT CROSS SLOPE = 0.0200 FT/FT

SPREAD	W	W/T	SW	SW/SX	Eo	a	S'W	SE
6.79	2.0	0.29	0.0833	4.2	0.76	3.5	0.147	0.132

XXXXXXXXXX CURB INLET ON A CONTINUOUS GRADE XXXXXXXXXX
REQUIRED LENGTH= 4.7 EFFICIENCY= 1.00
CFS INTERCEPTED= 0.97 CFS CARRYOVER= 0.00

==========

INLET NUMBER 6-10 LENGTH 6.0 STATION 6-10

DRAINAGE AREA = 0.260 ACRES C VALUE = .900 CA = 0.234
SUM CA= 0.234 INT= 4.00 CFS= 0.936 CO= 0.010 GUTTER FLOW= 0.946

GUTTER SLOPE = 0.0069 FT/FT PAVEMENT CROSS SLOPE = 0.0200 FT/FT

SPREAD	W	W/T	SW	SW/SX	Eo	a	S'W	SE
5.70	2.0	0.35	0.0833	4.2	0.84	3.5	0.147	0.143

XXXXXXXXXX CURB INLET ON A CONTINUOUS GRADE XXXXXXXXXX
REQUIRED LENGTH= 5.3 EFFICIENCY= 1.00
CFS INTERCEPTED= 0.95 CFS CARRYOVER= 0.00

```
==============================================================================
INLET NUMBER 6-11            LENGTH   6.0        STATION  6-11

DRAINAGE AREA =  0.080 ACRES       C VALUE = .900       CA =  0.072
DRAINAGE AREA =  0.150 ACRES       C VALUE = .900       CA =  0.135
SUM CA=   0.207 INT=  7.10  CFS=   1.470  CO=  0.010 GUTTER FLOW=   1.480

GUTTER SLOPE = 0.0030 FT/FT       PAVEMENT CROSS SLOPE =  0.0200 FT/FT


     SPREAD AT A SLOPE OF .003 (ft./ft.) IS  7.29 (ft.)

       XXXXXXXXXX CURB INLET IN A SUMP XXXXXXXXXX
      P EFFEC. LENGTH =  9.60                  H = 0.460
      DEPTH OF WATER  = 0.16              SPREAD =  8.20
```

PROJECT 22303
HEC12 Version: V70112.2 User S/N: 77010018 Run Date: 04-18-2005

==========

INLET NUMBER 7-2 LENGTH 6.0 STATION 7-2

DRAINAGE AREA = 0.310 ACRES C VALUE = .900 CA = 0.279
SUM CA= 0.279 INT= 4.00 CFS= 1.116 CO= 0.000 GUTTER FLOW= 1.116

GUTTER SLOPE = 0.0069 FT/FT PAVEMENT CROSS SLOPE = 0.0200 FT/FT

SPREAD	W	W/T	SW	SW/SX	Eo	a	S'W	SE
6.29	2.0	0.32	0.0833	4.2	0.80	3.5	0.147	0.137

XXXXXXXXXX CURB INLET ON A CONTINUOUS GRADE XXXXXXXXXX
REQUIRED LENGTH= 5.8 EFFICIENCY= 1.00
CFS INTERCEPTED= 1.12 CFS CARRYOVER= 0.00

==========

INLET NUMBER 7-4 LENGTH 6.0 STATION 7-4

DRAINAGE AREA = 0.160 ACRES C VALUE = .900 CA = 0.144
SUM CA= 0.144 INT= 4.00 CFS= 0.576 CO= 0.000 GUTTER FLOW= 0.576

GUTTER SLOPE = 0.0069 FT/FT PAVEMENT CROSS SLOPE = 0.0200 FT/FT

SPREAD	W	W/T	SW	SW/SX	Eo	a	S'W	SE
4.00	2.0	0.50	0.0833	4.2	0.95	3.5	0.147	0.159

XXXXXXXXXX CURB INLET ON A CONTINUOUS GRADE XXXXXXXXXX
REQUIRED LENGTH= 4.0 EFFICIENCY= 1.00
CFS INTERCEPTED= 0.58 CFS CARRYOVER= 0.00

==========

INLET NUMBER 7-6 LENGTH 6.0 STATION 7-6

DRAINAGE AREA = 0.360 ACRES C VALUE = .900 CA = 0.324
SUM CA= 0.324 INT= 4.00 CFS= 1.296 CO= 0.000 GUTTER FLOW= 1.296

GUTTER SLOPE = 0.0069 FT/FT PAVEMENT CROSS SLOPE = 0.0200 FT/FT

SPREAD	W	W/T	SW	SW/SX	Eo	a	S'W	SE
6.85	2.0	0.29	0.0833	4.2	0.76	3.5	0.147	0.131

XXXXXXXXXX CURB INLET ON A CONTINUOUS GRADE XXXXXXXXXX
REQUIRED LENGTH= 6.3 EFFICIENCY= 1.00
CFS INTERCEPTED= 1.29 CFS CARRYOVER= 0.01

Worksheet
Worksheet for Trapezoidal Channel

Project Description	
Worksheet	Trapezoidal Channe
Flow Element	Trapezoidal Channe
Method	Manning's Formula
Solve For	Channel Depth

Input Data		
Mannings Coeffic	0.013	
Slope	014500	ft/ft
Left Side Slope	2.00	H : V
Right Side Slope	2.00	H : V
Bottom Width	4.00	ft
Discharge	400.00	cfs

Results		
Depth	2.49	ft
Flow Area	22.4	ft²
Wetted Perim	15.15	ft
Top Width	13.97	ft
Critical Depth	3.90	ft
Critical Slope	0.002088	ft/ft
Velocity	17.86	ft/s
Velocity Head	4.96	ft
Specific Energ	7.45	ft
Froude Numb	2.49	
Flow Type	Supercritical	

Concrete Channel Upstream of Forebay

James City County – PPEA Site
Stormwater Pond Sediment Forebay Calculations

June 3, 2005

The James City County Stormwater BMP regulations require a sediment forebay sized to contain 0.1 inches per impervious acre of contributing drainage.

The Virginia Stormwater Management Handbook Minimum Standard 3.04 requires a sediment forebay sized to contain a maximum of 0.25 inches or a minimum of 0.1 inches per impervious acre of contributing drainage.

Total drainage area to basin = 187.72 acres
Total amount of impervious area = 58.77 acres

Volume formula: Vr (ft^3) = Impervious area (ft^2) * (inches of rainfall per imp. acre) / (12 in/ft)

*Forebay volume required for 0.25 inches of rainfall per impervious acre

Vr (ft^3) = 2,560,021.2 (ft^2) * (0.25 in) / (12 in/ft) = 53,333 ft^3

*Forebay volume required for 0.1 inches of rainfall per impervious acre

Vr (ft^3) = 2,560,021.2 (ft^2) * (0.1 in) / (12 in/ft) = 21,333 ft^3

Forebay volume provided at elevation 58.0 = 56,079 ft^3

PPEA Impervious Area Summary

Lightfoot/Warhill Site
James City County, Virginia

Total Site Area 187.72 acres

Impervious Area Breakout:

TNCC Site:		
Buildings	4.54	acres
Parking/Roads	20.68	acres
Subtotal:	25.22	acres
Stadium Site:		
Parking/Roads	8.64	acres
Buildings/stands	1.21	acres
Subtotal:	9.85	acres
Sports complex:		
Parking/Roads	3.58	acres
Buildings	1.32	acres
Subtotal:	4.90	acres
Shopping Center:	14.3	acres
State Roads:	4.5	acres
Total Imp. Area:	58.77	acres

Stormwater Basin Volume Requirements:

Volume= 2" runoff/acre of impervious area

58.77 ac* 43560 ft^2/ac = 2,560,021.20 ft^2
2,560,021.20 * 2" / 12"/foot = 426,670.20 ft^3
= 9.80 ac/ft

Estimated volume of existing pond = 29.50 ac/ft

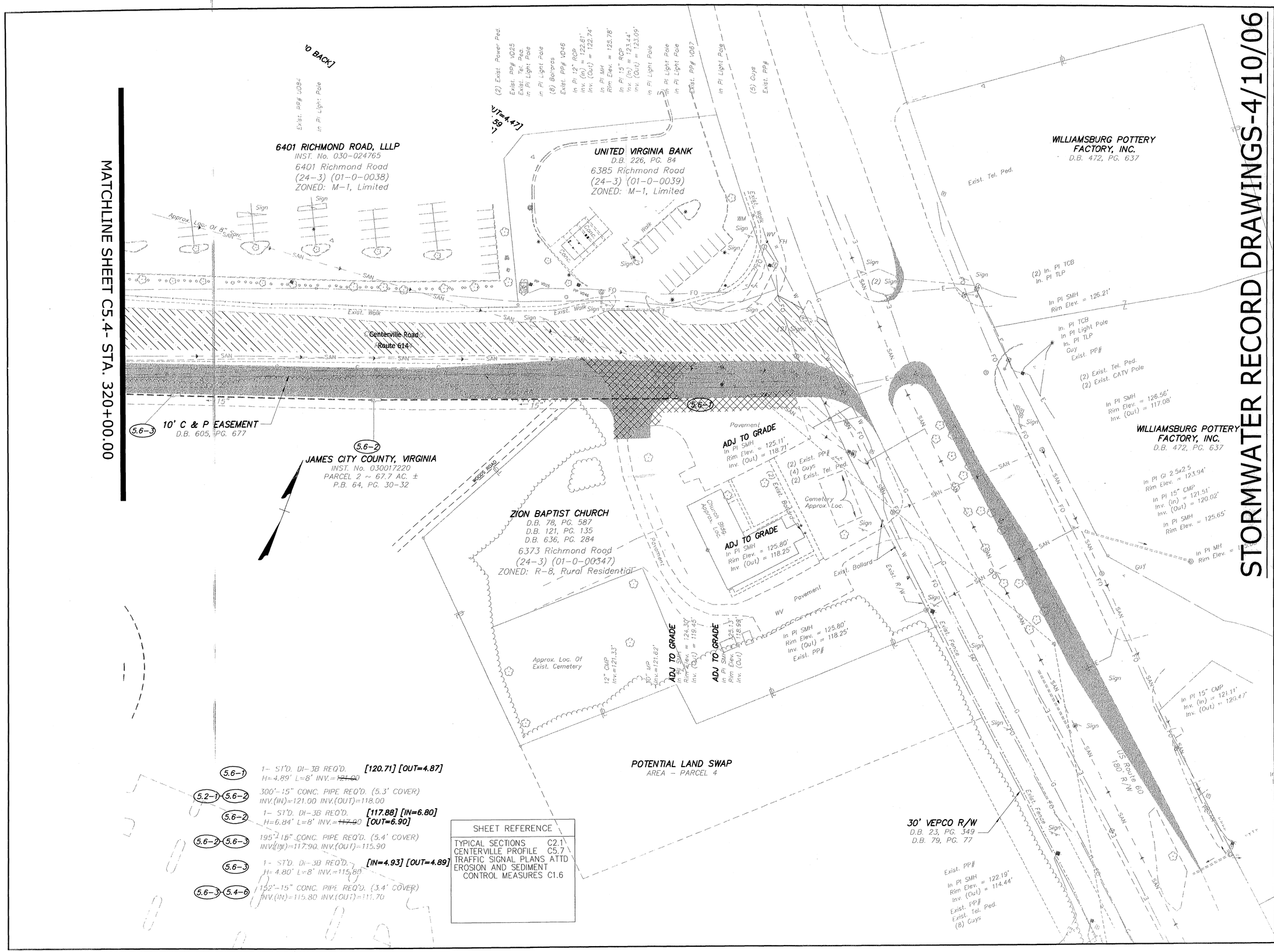

STORMWATER RECORD DRAWINGS-4/10/06

TIMMONS GROUP

YOUR VISION ACHIEVED THROUGH OURS.

THIS DRAWING PREPARED AT THE **CORPORATE OFFICE**
1001 Boulders Parkway, Suite 300 | Richmond, VA 23225
TEL 804.200.6500 FAX 804.560.1016 www.timmons.com

Site Development | Residential | Infrastructure | Technology

DATE	REVISION DESCRIPTION
8/1/05	ALL SHEETS
9/20/05	PER COUNTY AND VDOT COMMENTS
10/12/06	ADDRESSED AS BUILT COMMENTS

DATE	06/13/05
DRAWN BY	MRF
DESIGNED BY	MRF
CHECKED BY	CMK
SCALE	1"=40'

WARHILL SITE ROADWAYS AND IMPROVEMENTS : CENTERVILLE RD./RTE. 60
JAMES CITY COUNTY, VIRGINIA

PLAN SHEET

JOB NO. 22303

SHEET NO. C5.6

These plans and associated documents are the exclusive property of TIMMONS GROUP and may not be reproduced in whole or in part and shall not be used for any purpose whatsoever, inclusive, but not limited to construction, bidding, and/or construction staking without the express written consent of TIMMONS GROUP.

O:\22303\dwg\as-builts\22303CDRPL5.2-4-ASBLT.dwg, 10/13/2006 12:40:09 PM, Xerox.pc3

WATER SYSTEM

12"x8" TEE
8" GATE VALVE & BOX
2 JOINTS OF 8" PIPE
8" PLUG
3" FLUSHING HYDRANT

FIRE HYDRANT ASSEMBLY (COMPLETE)

12" WATERLINE

12"x8" TEE
8" GATE VALVE & BOX
8" GATE VALVE & BOX
2 JOINTS OF 8" PIPE
8" PLUG
3" FLUSHING HYDRANT

SANITARY SEWER SYSTEM

MH #	STATION	OFFSET
(6)	17+14.44	19.50' L
(15)	18+53.33	19.77' L
(18)	20+48.44	17.00' L
(7)	100+20.44	16.99' L

NOTE:

1. PLUG SANITARY SEWER STUBS AT MANHOLES AND CAP AT TERMINAL ENDS.

NOTE: LABEL ARROW DENOTES ACTUAL AS-BUILT LOCATION

STORM SEWER DRAINAGE DESCRIPTIONS

(MH-5) 1-ST'D. JB-1 REQ'D. STA. 17+82.00
[104.23'] TOP=1~~00.01~~' H=~~12.15~~ [12.88']
1-STD. SL-1 SAFETY SLAB REQ'D.

(MH-5)(MH-6) [238'] ~~233'~~-60" CLASS III RCP @ 0.~~0040~~ FT/FT [0.0042]
INV.(IN)=~~91.46~~ [91.35] INV.(OUT)=~~90.05~~ [90.35]

(MH-6) 1-ST'D. JB-1 REQ'D. STA. 20+15.00
[104.42'] TOP=1~~04.55~~' H=~~14.00~~' [14.07']
1-STD. SL-1 SAFETY SLAB REQ'D.

(MH-6)(MH-7) [231'] ~~233'~~-60" CLASS III RCP @ 0.~~0040~~ FT/FT [0.0033]
INV.(IN)=~~90.05~~ [90.35] INV.(OUT)= 89.59

(MH-7) 1-ST'D. JB-1 REQ'D. STA. 22+50.00
[105.56'] TOP=1~~05.19~~' H=~~15.90~~ [15.97]
1-STD. SL-1 SAFETY SLAB REQ'D.

(MH-7)(MH-8) [160'] ~~159'~~-60" CLASS III RCP @ 0.~~0040~~ FT/FT [0.0044]
INV.(IN)=89.59 INV.(OUT)=~~88.90~~ [88.89]

(MH-8) 1-ST'D. JB-1 REQ'D. STA. 100+35.00
[105.68'] TOP=1~~06.12~~' H=~~17.18~~ [16.79']
1-STD. SL-1 SAFETY SLAB REQ'D.

(MH-8)(MH-9) [258'] ~~253'~~-72" CLASS III RCP @ 0.~~0030~~ FT/FT [0.0032]
INV.(IN)=~~88.89~~ [88.89] INV.(OUT)=~~87.99~~ [88.06]

(MH-9) 1-ST'D. JB-1 REQ'D. STA. 102+08.75
[107.51] TOP=1~~07.13~~' H=~~19.18~~ [19.45]
1-STD. SL-1 SAFETY SLAB REQ'D.

MATCHLINE SHEET C7.0 - STA. 52+00.00

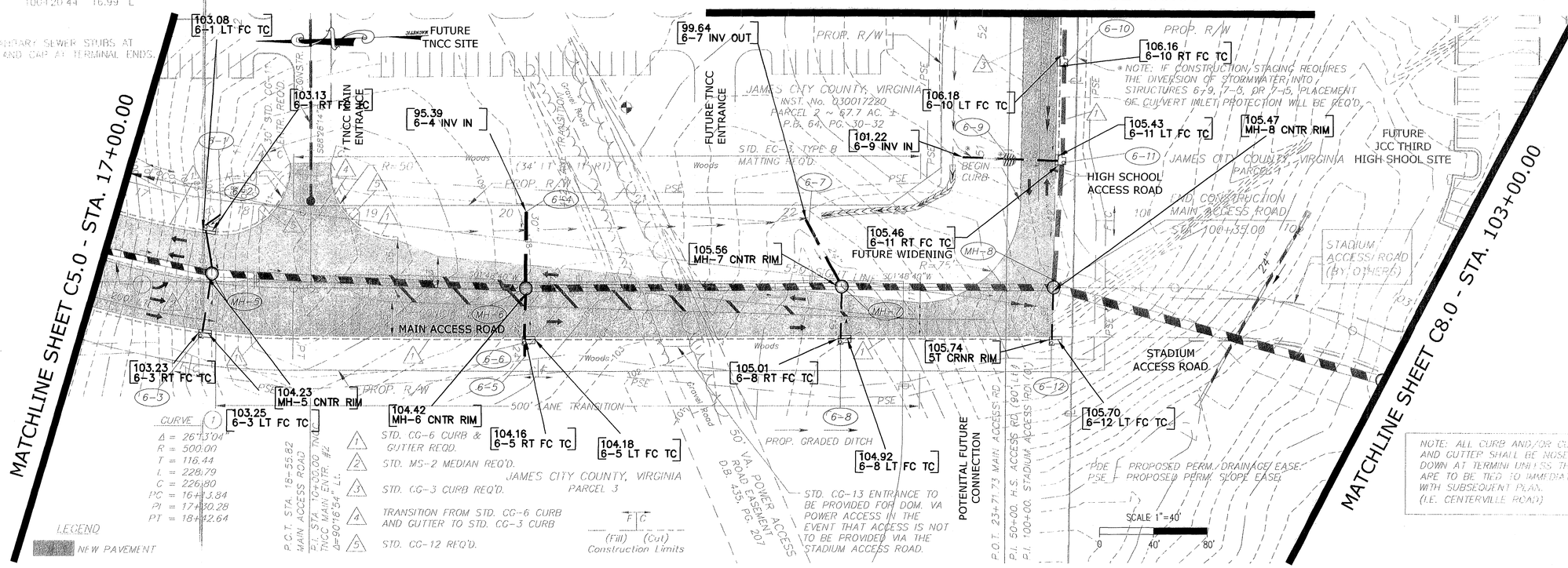

NOTE: ALL CURB AND/OR CURB AND GUTTER SHALL BE NOSED DOWN AT TERMINI UNLESS THEY ARE TO BE TIED TO IMMEDIATELY WITH SUBSEQUENT PLAN. (I.E. CENTERVILLE ROAD)

(6-1) 1-ST'D. 15" PLUG REQ'D. [NOT INSTALLED]
INV.=100.04

(6-1)(6-2) 24'-15" CONCRETE PIPE REQ'D. (3.6' COVER)
INV.(IN)=99.04 INV.(OUT)=98.80
[NOT INSTALLED]

(6-2) 1-ST'D. DI-3B REQ'D.(NOSE TYPE B) [TOP=103.08]
[6.62'] H=~~6.50~~' L=6' INV.=~~96.70~~ [96.46]
ST'D. IS-1 REQ'D.

(6-2)(MH-5) [34'] ~~32'~~-15" CONCRETE PIPE REQ'D. (5.0' COVER)
INV.(IN)=~~96.70~~ INV.(OUT)=96.38
[96.46]

(6-3) 1-ST'D. DI-3B REQ'D.(NOSE TYPE B) [TOP=103.23]
H=~~4.00~~ L=6' INV.=~~99.16~~ [99.36]
[3.87']

(6-3)(MH-5) [44'] ~~40'~~-15" CONCRETE PIPE REQ'D. (3.7' COVER)
INV.(IN)=~~99.16~~ INV.(OUT)=98.79
[99.36]

(6-4) 1-30" PRECAST CONC. PLUG REQ'D.
INV.=95.50 [INSTALLED]

(6-4)(MH-6) [56'] ~~50'~~-30" CONCRETE PIPE REQ'D. (6.5' COVER)
INV.(IN)=~~95.50~~ INV.(OUT)=~~94.80~~
[95.39] [94.89]

(6-5) 1-24" PRECAST CONC. PLUG REQ'D.
INV.=98.00 [NOT INSTALLED]

(6-5)(6-6) 8'-24" CONCRETE PIPE REQ'D. (6.5' COVER)
INV.(IN)=95.58 INV.(OUT)=95.50 [NOT INSTALLED]

(6-6) 1-ST'D. DI-3BB REQ'D.(NOSE TYPE B) [TOP=104.16]
[8.71'] H=~~8.75~~' L=6' INV.=~~95.40~~ [95.45]
ST'D IS-1 REQ'D.

(6-6)(MH-6) [36'] ~~32'~~-24" CONCRETE PIPE REQ'D. (6.7' COVER)
INV.(IN)=~~95.40~~ INV.(OUT)=95.00
[95.45]

(6-7) 1-ST'D. 24' ES-1 REQ'D.
INV.=~~97.00~~ [99.64]

(6-7)(MH-6) [56'] ~~50'~~-24" CONCRETE PIPE REQ'D. (6.8' COVER)
INV.(IN)=~~97.50~~ INV.(OUT)=97.00
[99.64]

(6-8) 1-ST'D. DI-3B REQ'D.(NOSE TYPE B) [TOP=105.01]
H=~~4.07~~' L=6' INV.=~~101.05~~ [101.20]
[3.81']

(6-8)(MH-7) [40'] ~~35'~~-15" CONCRETE PIPE REQ'D. (3.6' COVER)
INV.(IN)=~~101.05~~ INV.(OUT)=~~100.73~~ [98.78]
[101.20]

(6-9) 1-18" PRECAST CONC. PLUG REQ'D.
INV.=100.86 [NOT INSTALLED]

(6-9)(6-11) [71'] ~~65'~~-18" CONCRETE PIPE REQ'D. (3.0' COVER)
INV.(IN)=~~100.86~~ INV.(OUT)=100.50 [PIPE EXTENDED TO DITCH]
[101.22']

(6-10) 1-ST'D. DI-4BB REQ'D.(NOSE TYPE B) [TOP=106.16]
[9.61'] H=~~9.58~~ L=6' INV.= 96.55
ST'D. IS-1 REQ'D.

(6-10)(6-11) [73'] ~~67'~~-42" CONCRETE PIPE REQ'D. (5.8' COVER)
INV.(IN)=~~96.55~~ INV.(OUT)=~~95.83~~
[96.44] [95.83]

(6-11) 1-ST'D. DI-4BB REQ'D.(NOSE TYPE B) [TOP=105.43]
[9.13'] H=~~9.07~~' L=6' INV.=~~95.67~~ [96.30]
ST'D. IS-1 REQ'D.

(6-11)(MH-8) [94'] ~~88'~~-42" CONCRETE PIPE REQ'D. (7.2' COVER)
INV.(IN)=~~95.67~~ INV.(OUT)=95.08
[96.30]

(6-12) 1-ST'D. DI-3B REQ'D.(NOSE TYPE B) [TOP=105.74]
[4.40'] H=~~4.45~~' L=6' INV.=101.60
ST'D. IS-1 REQ'D.

(6-12)(MH-8) [36'] ~~34'~~-15" CONCRETE PIPE REQ'D. (3.2' COVER)
INV.(IN)=101.60 INV.(OUT)=101.26

CLASS I RIP RAP DITCH DETAIL
LEFT SIDE STA. 22+00 TO 23+50

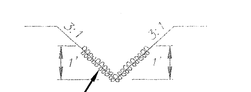

SHEET REFERENCE

TYPICAL SECTIONS	C2.0
MAIN ACCESS PROFILE	C6.1
SEC. ACCESS PROFILE	C7.1
ENTRANCE PROFILE	C7.1
PAVEMENT MARKING	C2.3

STORMWATER RECORD DRAWINGS-4/10/06

YOUR VISION ACHIEVED THROUGH OURS.

THIS DRAWING PREPARED AT THE CORPORATE OFFICE
1001 Boulders Parkway, Suite 300 | Richmond, VA 23225
TEL 804.200.6500 FAX 804.560.1016 www.timmons.com

Site Development | Residential | Infrastructure | Technology

DATE	REVISION DESCRIPTION
7/11/05	ADDRESSED COMMENTS
4/10/06	AS BUILT
10/12/06	ADDRESSED AS BUILT COMMENTS

DATE 06/07/05
DRAWN BY MRF
DESIGNED BY MRF
CHECKED BY CMK
SCALE 1"=40'

TIMMONS GROUP

WARHILL SITE ROADWAYS AND IMPROVEMENTS
JAMES CITY COUNTY, VIRGINIA
PLAN SHEET

JOB NO. 22303
SHEET NO. C6.0

These plans and associated documents are the exclusive property of TIMMONS GROUP and may not be reproduced in whole or in part and shall not be used for any purpose whatsoever, inclusive, but not limited to construction, bidding, and/or construction staking without the express written consent of TIMMONS GROUP.

O:\22303\dwg\as-builts\22303C-5-6-7-8-ASBLT.dwg, 10/12/2006 11:53:03 AM, Xerox.pc3

NOTE:

THE 12" WATERLINE HAS 3.5' OF COVER AT THE FINISHED GRADE CENTERLINE WHICH EQUALS 3.0' OF COVER AT THE CENTERLINE OF THE 12" WATERLINE

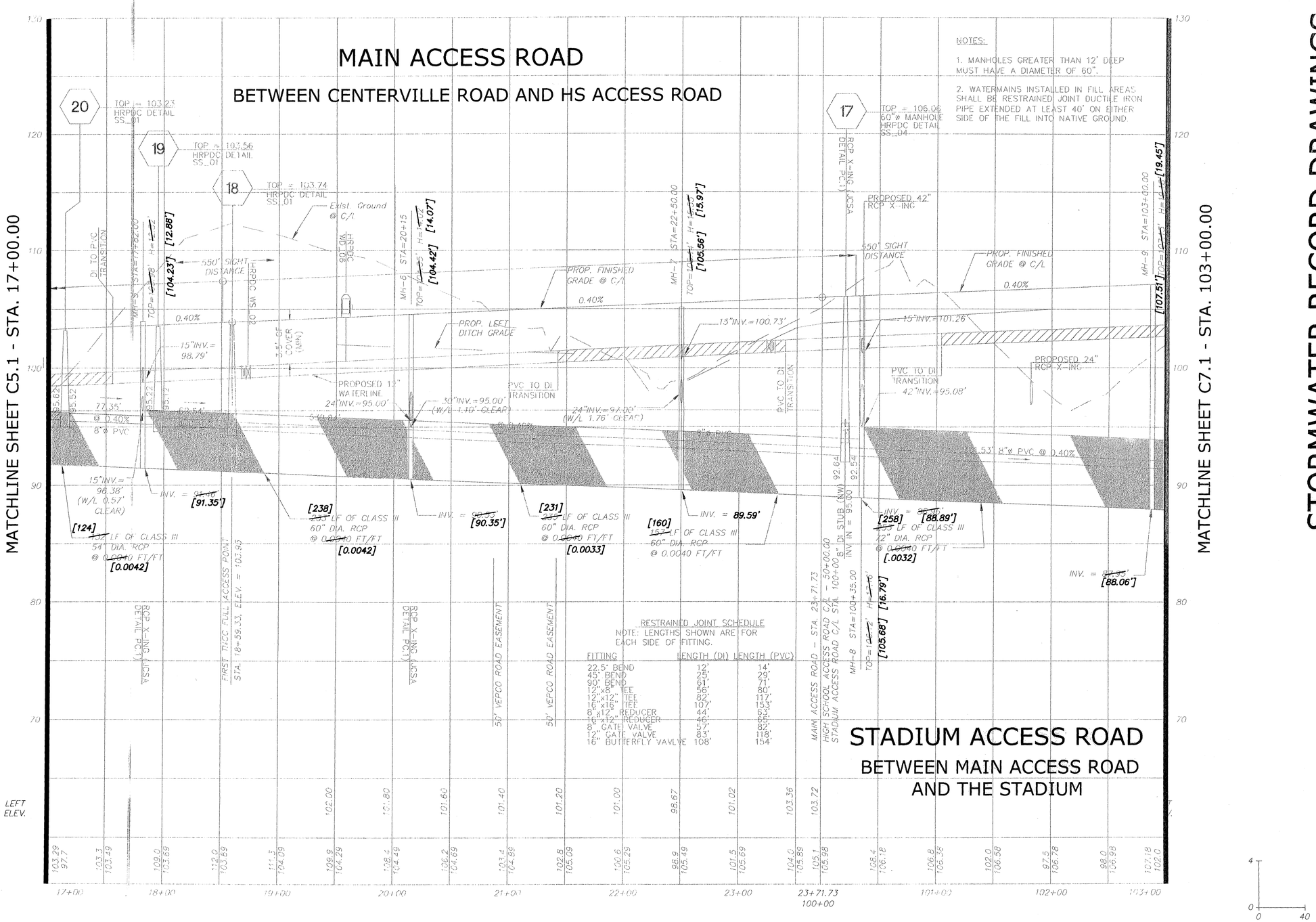

STORMWATER RECORD DRAWINGS-4/10/06

TIMMONS GROUP

YOUR VISION ACHIEVED THROUGH OURS.

THIS DRAWING PREPARED AT THE **CORPORATE OFFICE**
1001 Boulders Parkway, Suite 300 | Richmond, VA 23225
TEL 804.200.6500 FAX 804.560.1016 www.timmons.com

Site Development | Residential | Infrastructure | Technology

DATE	REVISION DESCRIPTION
7/11/05	ADDRESSED COMMENTS
4/10/06	ADDRESSED AS BUILT COMMENTS
10/12/06	ADDRESSED AS BUILT COMMENTS

DATE 06/07/05
DRAWN BY MRF
DESIGNED BY MRF
CHECKED BY CMK
SCALE (H) 1"=40' (V) 1"=4'

WARHILL SITE ROADWAYS AND IMPROVEMENTS
JAMES CITY COUNTY, VIRGINIA
PROFILE SHEET

JOB NO. 22303
SHEET NO. C6.1

These plans and associated documents are the exclusive property of TIMMONS GROUP and may not be reproduced in whole or in part and shall not be used for any purpose whatsoever, inclusive, but not limited to construction, bidding, and/or construction staking without the express written consent of TIMMONS GROUP.

O:\22303\dwg\as-builts\22303C-51-61-71-81-ASBLT.dwg, 10/12/2006 12:01:02 PM, Xerox.pc3

NOTE: LABEL ARROW DENOTES ACTUAL AS-BUILT LOCATION

MATCHLINE SHEET C6.0 - STA. 52+00.00

FUTURE TNCC SITE

P.O.T. STA. 56+52.60 HIGH SCHOOL ACCESS ROAD
P.T. STA. 10+00.00 JCC SCHOOL ENTR. #1
Δ=90°33'39" Lt.

JAMES CITY COUNTY, VIRGINIA
INST. No. 030017220
PARCEL 2 ~ 67.7 AC. ±
P.B. 64, PG. 30-32

FUTURE TNCC SITE

P.O.T. STA. 60+20.83 HIGH SCHOOL ACCESS ROAD
P.T. STA. 10+00.00 JCC SCHOOL ENTR. #2
Δ=90°33'36" Lt.

103.89
7-5 ES-1 INV IN

102.94
7-3 ES-1 INV IN

PSE — PROP. R/W — PSE — PSE

53 FUTURE WIDENING 54 (7-5) 55 CONSTR. ℄ 56 57 (7-3) 58 FUTURE WIDENING 59 END CURB 60 60+72.47

S87°28'54"E — S87°28'54"E

HIGH SCHOOL ACCESS ROAD — 80' RIGHT OF WAY — 140' R.O.W. TAPER — 100' T.L. — 30' STD. CG-12

END CONSTRUCTION
HIGH SCHOOL ACCESS ROAD
STA. 60+72.47

CURVE (2)
Δ = 29°26'24"
R = 115.00
T = 30.21
L = 59.09
C = 58.44
PC = 10+62.22
PI = 10+92.43
PT = 11+21.31

PROP. GRAVEL DITCH

SCALE 1"=40'
0 40' 80'

PDE - PROPOSED PERM. DRAINAGE EASE.
PSE - PROPOSED PERM. SLOPE EASE.

(1) STD. CG-6 CURB & GUTTER REQD.
(2) STD. MS-2 MEDIAN REQ'D.
(3) STD. CG-3 CURB REQ'D.
(4) TRANSITION FROM STD. CG-6 CURB AND GUTTER TO STD. CG-3 CURB
(5) STD. CG-12 REQ'D.

(7-1)

107.75
7-6 RT FC TC

107.81
7-6 LT FC TC

110.87
7-2 RT FC TC

109.93
7-4 RT FC TC

110.90
72 LT FC TC

109.92
7-4 LT FC TC

(7-6) (7-4) (7-2)

PROP. R/W — PSE — PSE — PSE

R=35' R=50' R=50'

FUTURE W/JCC THIRD HIGH SHOOL SITE

FUTURE JCC THIRD HIGH SHOOL SITE

JAMES CITY COUNTY, VIRGINIA
PARCEL 1

30' STD. CG-12 ENTR. REQ'D. — N01°57'30"E — CONSTR. ℄ — 30' STD. CG-12 ENTR. REQ'D. — N01°57'30"E — CONSTR. ℄

11+50 — 11+70

F C
(Fill) (Cut)
Construction Limits

* NOTE: IF CONSTRUCTION STAGING REQUIRES THE DIVERSION OF STORMWATER INTO STRUCTURES 6-9, 7-3, OR 7-5, PLACEMENT OF CULVERT INLET PROTECTION WILL BE REQ'D.

(7-1) END 18" PIPE FOR FUTURE EXTENTION *
INV.=107.11 **[HAS BEEN EXTENDED & PLUGGED]**

(7-1) (7-2) **[231']** ~~100'~~ 18" CONCRETE PIPE REQ'D. (5.0' COVER)
INV.(IN)=**107.11** INV.(OUT)=~~104.40~~ **[104.40]**

(7-2) 1-ST'D. DI-3B REQ'D.(NOSE TYPE B) **[TOP=110.88]**
H=~~8.88'~~ **[6.48']** L=6' INV.=~~104.40~~ **[104.40]**

(7-2) (7-4) **[135']** ~~130'~~ 18" CONCRETE PIPE REQ'D. (6.0' COVER)
INV.(IN)=~~104.40~~ **[104.40]** INV.(OUT)=~~102.72~~ **[102.00]**

(7-3) 1-36" PRECAST CONC. PLUG REQ'D.
INV.=102.68 **[NOT INSTALLED]**

(7-3) (7-4) **[75']** ~~80'~~ 36" CONCRETE PIPE REQ'D. (4.4' COVER) **[PIPE EXTENDED TO DITCH]**
INV.(IN)=~~102.68~~ **[102.94]** INV.(OUT)=~~102.72~~ **[102.00]**

(7-4) 1-ST'D. DI-4B REQ'D.(NOSE TYPE B) **[TOP=109.93]**
H=~~7.73'~~ **[7.93']** L=6' INV.=~~102.72~~ **[102.00]**

(7-4) (7-6) **[311']** ~~300'~~ 36" CONCRETE PIPE REQ'D. (4.9' COVER)
INV.(IN)=~~102.72~~ **[102.00]** INV.(OUT)=~~99.18~~ **[99.15]**

(7-5) 1-24" PRECAST CONCRETE PLUG REQ'D.
INV.=103.26 **[NOT INSTALLED]**

(7-5) (7-6) **[75']** ~~70'~~ 24" CONCRETE PIPE REQ'D. (2.7' COVER) **[PIPE EXTENDED TO DITCH]**
INV.(IN)=~~103.26~~ **[103.89]** INV.(OUT)=~~100.00~~ **[99.15]**

(7-6) 1-ST'D. DI-4BB REQ'D.(NOSE TYPE B) **[TOP=107.75]**
H=~~8.76'~~ **[8.60']** L=6' INV.=~~99.08~~ **[99.15]**

(7-6) (6-10) **[236']** ~~230'~~ 36" CONCRETE PIPE REQ'D. (7.1' COVER)
INV.(IN)=~~99.08~~ **[99.15]** INV.(OUT)=~~96.80~~ **[96.55]**

* DIVERT UPSTREAM WATER TO THIS PIPE ONLY AFTER THE DOWNSTREAM PIPE SYSTEM (INCLUDING FOREBAY/POND) HAS BEEN COMPLETED

SHEET REFERENCE

TYPICAL SECTIONS	C2.0
HS. ACCESS PROFILE	C7.1
ENTRANCE PROFILES	C7.1
PAVEMENT MARKING	C2.3

STORMWATER RECORD DRAWINGS-4/10/06

COMMONWEALTH OF VIRGINIA
ANDREW P. GOULD
NO. 029331
10-13-06
PROFESSIONAL ENGINEER

THIS DRAWING PREPARED AT THE
CORPORATE OFFICE
1001 Boulders Parkway, Suite 300 | Richmond, VA 23225
TEL 804.200.6500 FAX 804.560.1016 www.timmons.com

YOUR VISION ACHIEVED THROUGH OURS.

Site Development | Residential | Infrastructure | Technology

DATE	REVISION DESCRIPTION
7/11/05	ADDRESSED COMMENTS
4/10/06	AS BUILT
10/12/06	ADDRESSED AS BUILT COMMENTS

DATE	06/07/05
DRAWN BY	MRF
DESIGNED BY	MRF
CHECKED BY	CMK
SCALE	1"=40'

TIMMONS GROUP

WARHILL SITE ROADWAYS AND IMPROVEMENTS

JAMES CITY COUNTY, VIRGINIA

PLAN SHEET

JOB NO. 22303

SHEET NO. C7.0

These plans and associated documents are the exclusive property of TIMMONS GROUP and may not be reproduced in whole or in part and shall not be used for any purpose whatsoever, inclusive, but not limited to construction, bidding, and/or construction staking without the express written consent of TIMMONS GROUP.

O:\22303\dwg\as-builts\22303C-5-6-7-8-ASBLT.dwg, 10/12/2006 11:54:17 AM, Xerox.pc3

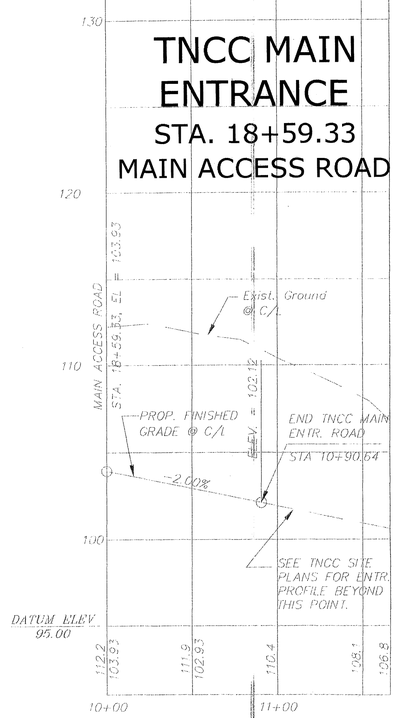

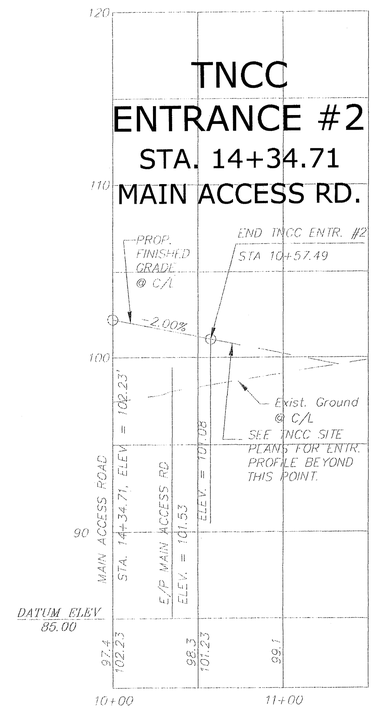

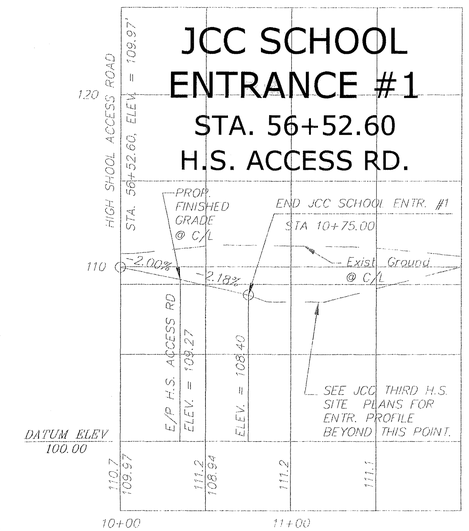

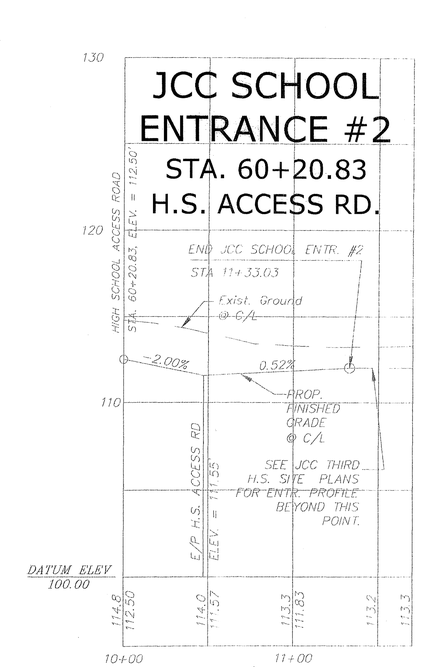

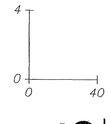

HIGH SCHOOL ACCESS ROAD

BETWEEN MAIN ACCESS ROAD AND THE BUS ENTRANCE TO HS

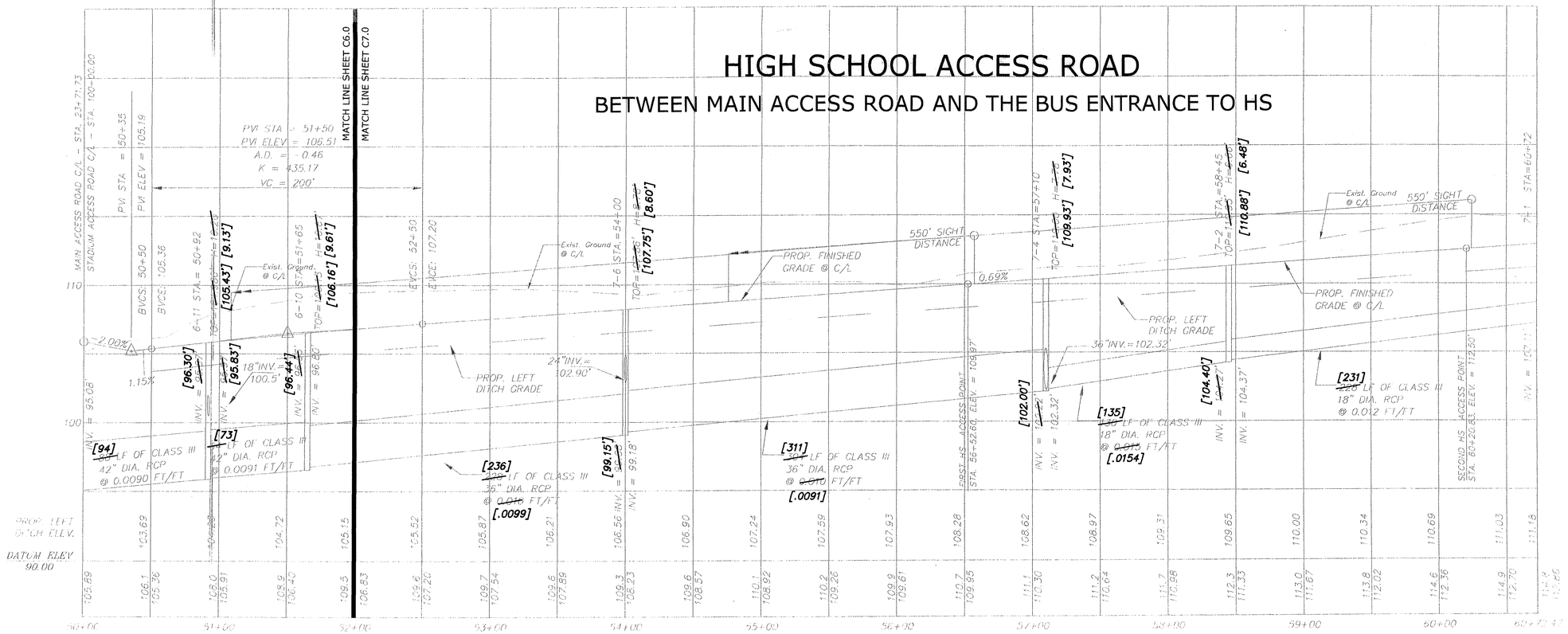

STORMWATER RECORD DRAWINGS-4/10/06

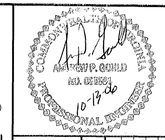

THIS DRAWING PREPARED AT THE CORPORATE OFFICE
1001 Boulders Parkway, Suite 300 | Richmond, VA 23225
TEL 804.200.6500 FAX 804.560.1016 www.timmons.com

YOUR VISION ACHIEVED THROUGH OURS.

Site Development | Residential | Infrastructure | Technology

DATE	REVISION DESCRIPTION
7/21/05	ADDRESSED COMMENTS
4/10/06	AS-BUILT
10/12/06	ADDRESSED AS BUILT COMMENTS

DATE	06/07/05
DRAWN BY	MRF
DESIGNED BY	MRF
CHECKED BY	CMK
SCALE	(H) 1"=40' (V) 1"=4'

TIMMONS GROUP

WARHILL SITE ROADWAYS AND IMPROVEMENTS

JAMES CITY COUNTY, VIRGINIA

PROFILE SHEET

JOB NO.	22303
SHEET NO.	C7.1

These plans and associated documents are the exclusive property of TIMMONS GROUP and may not be reproduced in whole or in part and shall not be used for any purpose whatsoever, inclusive, but not limited to construction, bidding, and/or construction staking without the express written consent of TIMMONS GROUP.

O:\22303\dwg\as-builts\22303C-51-61-71-81-ASBLT.dwg, 10/12/2006 12:00:43 PM, Xerox.pc3

WATER SYSTEM

12"x8" TEE
12" GATE VALVES & BOXES
8" GATE VALVE & BOX
8" JOINTS 8" PIPE
8" PLUG

FIRE HYDRANT ASSEMBLY (COMPLETE)

12" WATERLINE

12" 90° BEND

SANITARY SEWER SYSTEM

MH#	STATION	OFFSET
16	103+23.88	0.00' R
15	106+75.54	0.00' R
14	110+38.89	0.00' R

NOTE:

1. PLUG SANITARY SEWER STUBS AT MANHOLES AND CAP AT TERMINAL ENDS.

NOTE: LABEL ARROW DENOTES ACTUAL AS-BUILT LOCATION

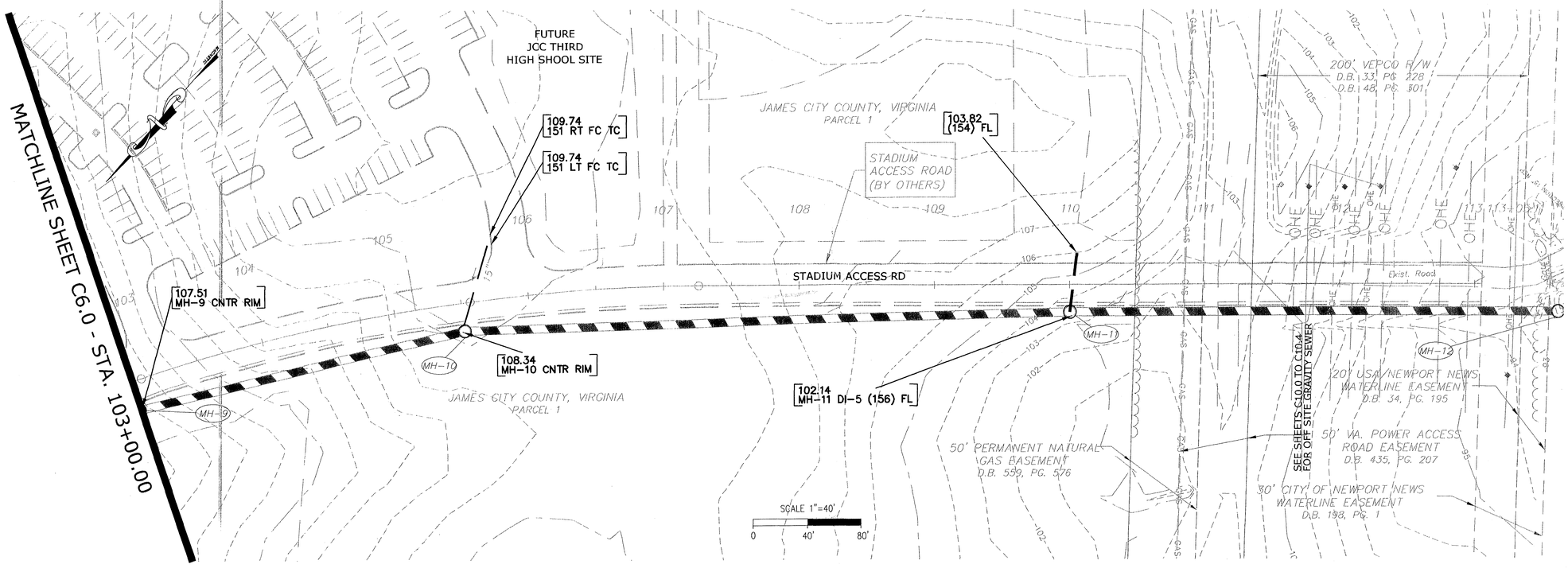

STORM SEWER DRAINAGE DESCRIPTIONS

(MH-9) 1-ST'D. JB-1 REQ'D. STA. 102+08.75
[107.51'] ~~TOP=107.51'~~ ~~H=19.18~~ [19.45']
1-STD. SL-1 SAFETY SLAB REQ'D.

(MH-9)(MH-10) [245'] ~~245'~~ -72" CLASS IV RCP @ ~~0.0046~~ [0.0046] FT/FT
INV.(IN)= ~~87.93~~ [88.06] INV.(OUT)= ~~86.94~~ [86.93]

(MH-10) 1-PRECAST MANHOLE TEE & RISER REQ'D.
STA. 105+34.59 TOP= ~~108.12~~ [108.34'] H= ~~21.10~~ [21.41']
1-STD. SL-1 SAFETY SLAB REQ'D.

(MH-10)(MH-11) [455'] ~~455'~~ -72" CLASS IV RCP @ ~~0.0010~~ [0.0037] FT/FT
INV.(IN)= ~~86.94~~ [86.93] INV.(OUT)= ~~85.77~~ [85.26]

(MH-11) 1-PRECAST MANHOLE TEE & RISER REQ'D. [DI-5 TOP]
STA. 109+81.56 TOP= ~~104.07~~ [102.14'] ~~H=15.70~~ [16.88']
1-STD. SL-1 SAFETY SLAB REQ'D.

(MH-11)(MH-12) [371'] ~~371'~~ -72" CLASS IV O-RING RCP @ ~~0.0122~~ [0.0332] FT/FT
INV.(IN)= ~~85.77~~ [85.26] INV.(OUT)= ~~72.95~~ [72.96]

SHEET REFERENCE

NOTE

1. FOR CONTINUATION OF STORM WATER - SEE SHEET C9.0
2. FOR CONTINUATION OF WATER LINE AND SANITARY SEWER - SEE SHEET C10.0

STORMWATER RECORD DRAWINGS-4/10/06

COMMONWEALTH OF VIRGINIA
ARTHUR P. COLLO
NO. 0401
PROFESSIONAL ENGINEER
10-13-06

THIS DRAWING PREPARED AT THE CORPORATE OFFICE
1001 Boulders Parkway, Suite 300 | Richmond, VA 23225
TEL 804.200.6500 FAX 804.560.1016 www.timmons.com

YOUR VISION ACHIEVED THROUGH OURS.

Site Development | Residential | Infrastructure | Technology

DATE	REVISION DESCRIPTION
7/11/05	ADDRESSED COMMENTS
4/10/06	AS BUILT
10/12/06	ADDRESSED AS BUILT COMMENTS

DATE	06/07/05
DRAWN BY	MRF
DESIGNED BY	MRF
CHECKED BY	CMK
SCALE	1"=40'

TIMMONS GROUP

WARHILL SITE ROADWAYS AND IMPROVEMENTS

JAMES CITY COUNTY, VIRGINIA

PLAN SHEET

JOB NO. 22303

SHEET NO. C8.0

These plans and associated documents are the exclusive property of TIMMONS GROUP and may not be reproduced in whole or in part and shall not be used for any purpose whatsoever, inclusive, but not limited to construction, building, and/or construction staking, without the express written consent of TIMMONS GROUP.

O:\22303\dwg\as-builts\22303C-5-6-7-8-ASBLT.dwg, 10/12/2006 12:17:08 PM, Xerox.pc3

NOTE:

THE 12" WATERLINE HAS 3.5' OF COVER AT THE FINISHED GRADE CENTERLINE WHICH EQUALS 3.0' OF COVER AT THE CENTERLINE OF THE 12" WATERLINE

NOTES:

1. MANHOLES GREATER THAN 12' DEEP MUST HAVE A DIAMETER OF 60".

2. GRAVITY SEWER MAINS GREATER THAN 16' DEEP SHALL BE DUCTILE IRON. NO PIPE TRANSITIONS SHALL BE ALLOWED BETWEEN MANHOLES.

3. WATERMAINS INSTALLED IN FILL AREAS SHALL BE RESTRAINED JOINT DUCTILE IRON PIPE EXTENDED AT LEAST 40' ON EITHER SIDE OF THE FILL INTO NATIVE GROUND.

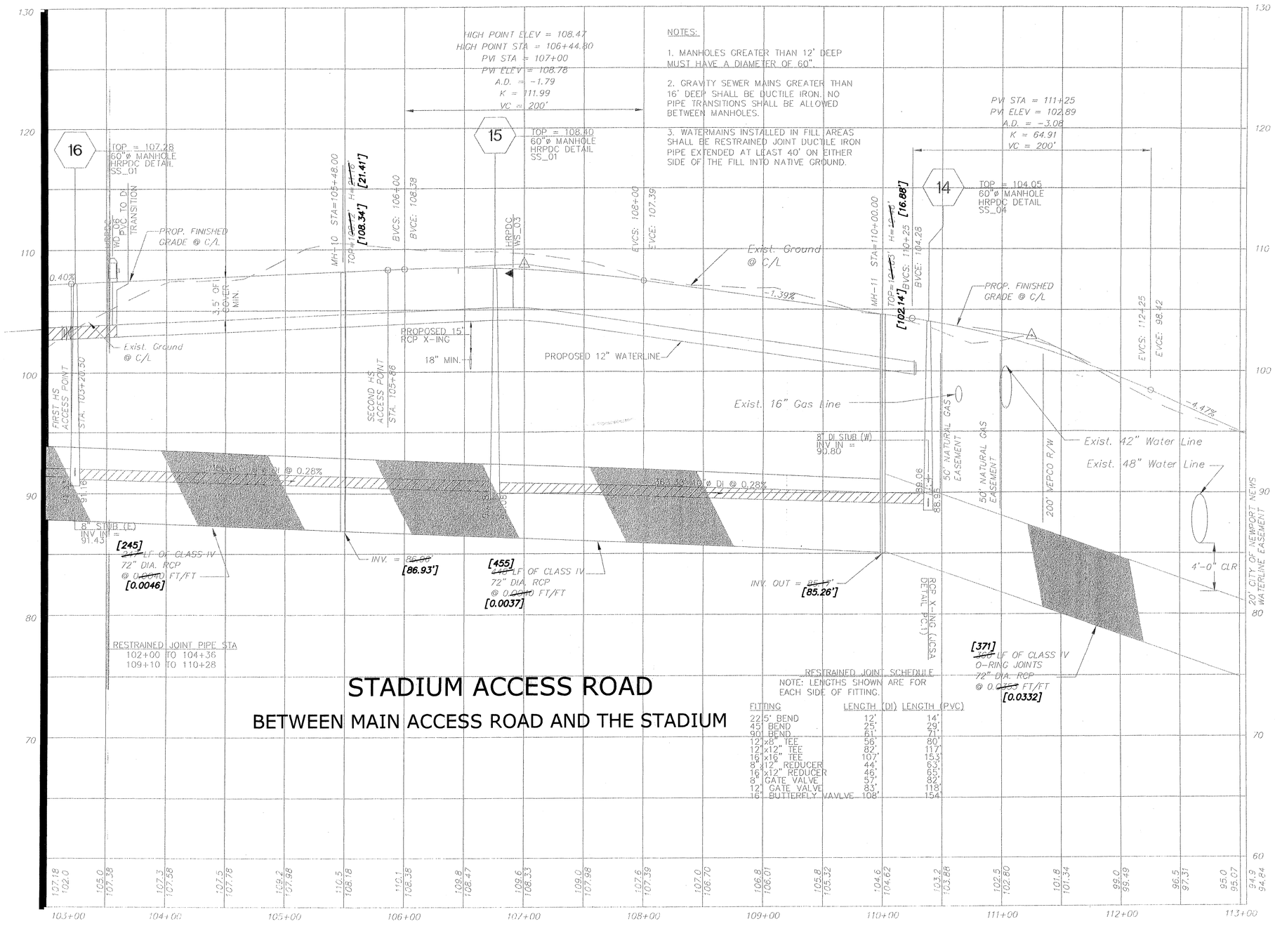

RESTRAINED JOINT SCHEDULE
NOTE: LENGTHS SHOWN ARE FOR EACH SIDE OF FITTING.

FITTING	LENGTH (DI)	LENGTH (PVC)
22.5° BEND	12'	14'
45° BEND	25'	29'
90° BEND	61'	71'
12"x8" TEE	56'	80'
12"x12" TEE	82'	117'
16"x16" TEE	107'	153'
8"x12" REDUCER	44'	63'
16"x12" REDUCER	46'	65'
8" GATE VALVE	57'	82'
12" GATE VALVE	83'	118'
16" BUTTERFLY VAVLVE	108'	154

STORMWATER RECORD DRAWINGS-4/10/06

YOUR VISION ACHIEVED THROUGH OURS.

Site Development | Residential | Infrastructure | Technology

THIS DRAWING PREPARED AT THE CORPORATE OFFICE
1001 Boulders Parkway, Suite 300 | Richmond, VA 23225
TEL 804.200.6500 FAX 804.560.1016 www.timmons.com

DATE	REVISION DESCRIPTION
4/10/06	ADDRESSED COMMENTS
4/11/06	AS BUILT
10/12/06	ADDRESSED AS BUILT COMMENTS

DATE 06/07/05
DRAWN BY MRF
DESIGNED BY MRF
CHECKED BY CMK
SCALE (H) 1"=40' (V) 1"=4'

TIMMONS GROUP

WARHILL SITE ROADWAYS AND IMPROVEMENTS

JAMES CITY COUNTY, VIRGINIA

PROFILE SHEET

JOB NO. 22303

SHEET NO. C8.1

These plans and associated documents are the exclusive property of TIMMONS GROUP and may not be reproduced in whole or in part and shall not be used for any purpose whatsoever, inclusive, but not limited to construction, bidding, and/or construction staking without the express written consent of TIMMONS GROUP.

O:\22303\dwg\as-builts\22303C-S1-61-71-81-ASBLT.dwg, 10/12/2006 12:00:24 PM, Xerox.pc3

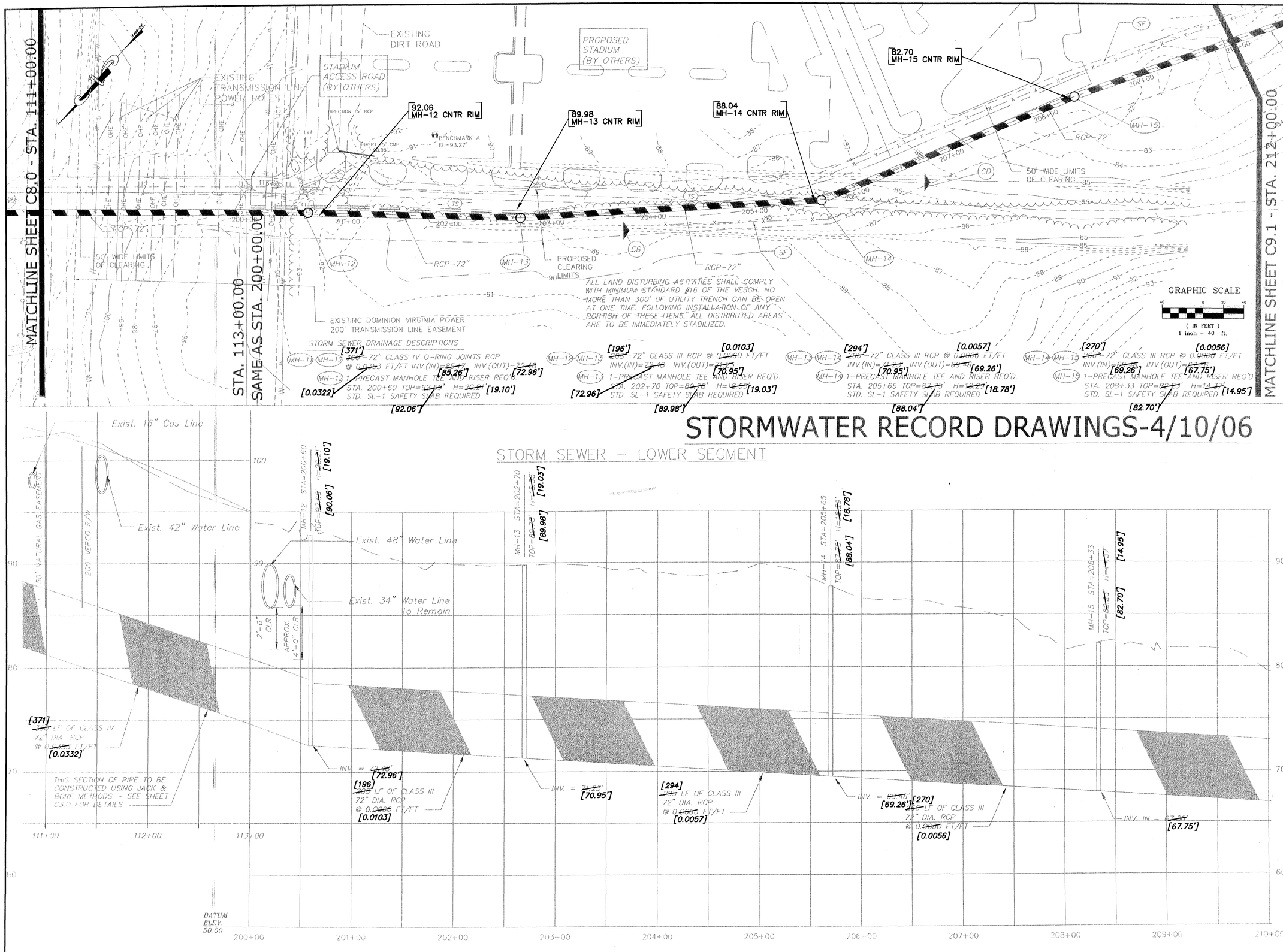

THIS DRAWING PREPARED AT THE **CORPORATE OFFICE**
1001 Boulders Parkway, Suite 300 | Richmond, VA 23225
TEL 804.200.6500 FAX 804.560.1016 www.timmons.com

YOUR VISION ACHIEVED THROUGH OURS.

Site Development | Residential | Infrastructure | Technology

DATE	REVISION DESCRIPTION
7/11/05	ADDRESSED COMMENTS
11/11/05	ADDRESSED COMMENTS
4/10/06	AS BUILT
10/12/06	ADDRESSED AS BUILT COMMENTS

DATE	06/07/05
DRAWN BY	C.ALMARODE
DESIGNED BY	B. EPPS
CHECKED BY	D. GOULD
SCALE	1" = 40' 1"=4'V

TIMMONS GROUP

WARHILL SITE ROADWAYS AND IMPROVEMENTS

JAMES CITY COUNTY, VIRGINIA

OFFSITE STORM WATER PLAN & PROFILE

JOB NO.	22303
SHEET NO.	C9.0

These plans and associated documents are the exclusive property of TIMMONS GROUP and may not be reproduced in whole or in part and shall not be used for any purpose whatsoever, inclusive, but not limited to construction, bidding, and/or construction staking without the express written consent of TIMMONS GROUP.

O:\22303\dwg\as-builts\22303C090-CD91-ASBLT.dwg, 10/12/2006 1:11:00 PM, Xerox.pc3

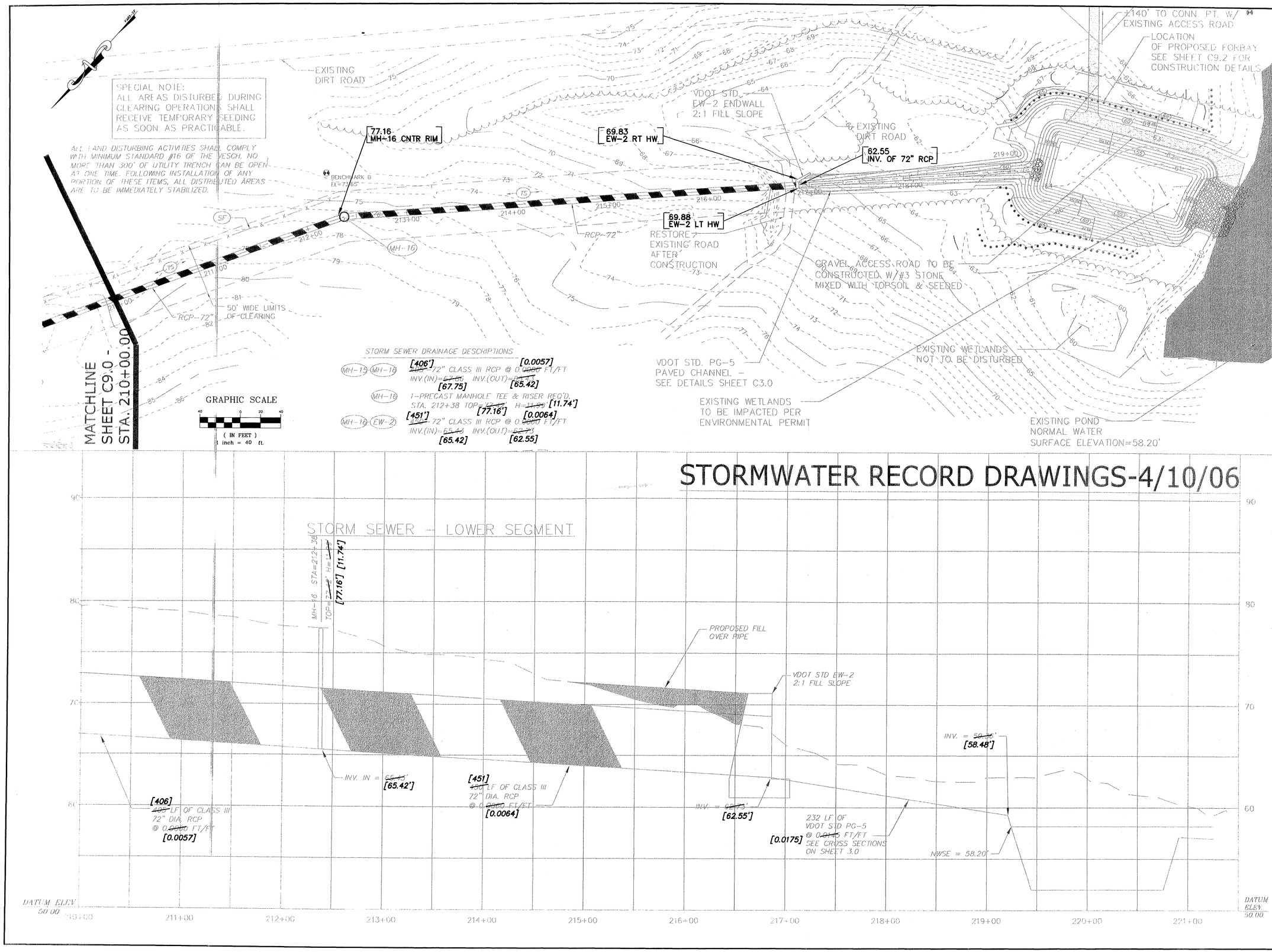

THIS DRAWING PREPARED AT THE CORPORATE OFFICE
1001 Boulders Parkway, Suite 300 | Richmond, VA 23225
TEL 804.200.6500 FAX 804.560.1016 www.timmons.com

YOUR VISION ACHIEVED THROUGH OURS.

Site Development | Residential | Infrastructure | Technology

DATE	REVISION DESCRIPTION
7/11/05	ADDRESSED COMMENTS
11/11/05	ADDRESSED COMMENTS
4/10/06	AS BUILT
10/12/06	ADDRESSED AS BUILT COMMENTS

DATE	06/07/05
DRAWN BY	C.ALMARODE
DESIGNED BY	B. EPPS
CHECKED BY	D. GOULD
SCALE	1" = 40' 1"=4'V

TIMMONS GROUP.

WARHILL SITE ROADWAYS AND IMPROVEMENTS
JAMES CITY COUNTY, VIRGINIA

OFFSITE STORM WATER PLAN & PROFILE

JOB NO.	22303
SHEET NO.	C9.1

These plans and associated documents are the exclusive property of TIMMONS GROUP and may not be reproduced in whole or in part and shall not be used for any purpose whatsoever, inclusive, but not limited to construction, bidding, and/or construction staking without the express written consent of TIMMONS GROUP.

O:\22303\dwg\as-builts\22303D90-CD91-ASBLT.dwg, 10/12/2006 11:10:20 PM, Xerox.pc3

PURPOSE OF A FOREBAY:
A SEDIMENT FOREBAY IS A LETTING BASIN OR PLUNGE POOL CONSTRUCTED AT THE DOWNWARD DISCHARGE POINTS OF A STORMWATER BMP. THE PURPOSE OF A SEDIMENT FOREBAY IS TO ALLOW SEDIMENT TO SETTLE FROM THE INCOMING STORMWATER BEFORE IT IS DELIVERED TO THE BALANCE OF THE BMP. A SEDIMENT FOREBAY HELPS TO ISOLATE THE SEDIMENT DEPOSITION IN AN ACCESSIBLE AREA, WHICH FACILITATES BMP MAINTENANCE EFFORTS.

GENERAL NOTES:
1. FOREBAY INSTALLATION AND MATERIALS TO MEET MINIMUM STANDARD 3.04 OF THE VIRGINIA STORMWATER MANAGEMENT HANDBOOK.
2. CONTRACTOR TO TEMPORARILY LOWER EXISTING POND WATER SURFACE IN ORDER TO GAIN ACCESS FOR WERK GRADING. THE WATER SURFACE SHALL NOT BE LOWERED AT A RATE FASTER THAN 6" DURING A 24 HOUR PERIOD.
3. VDOT DOES NOT ASSUME RESPONSIBILITY FOR MAINTENANCE OF THE DETENTION/RETENTION POND OR ITS STRUCTURES, AND SHALL BE SAVED HARMLESS FROM ANY DAMAGE.

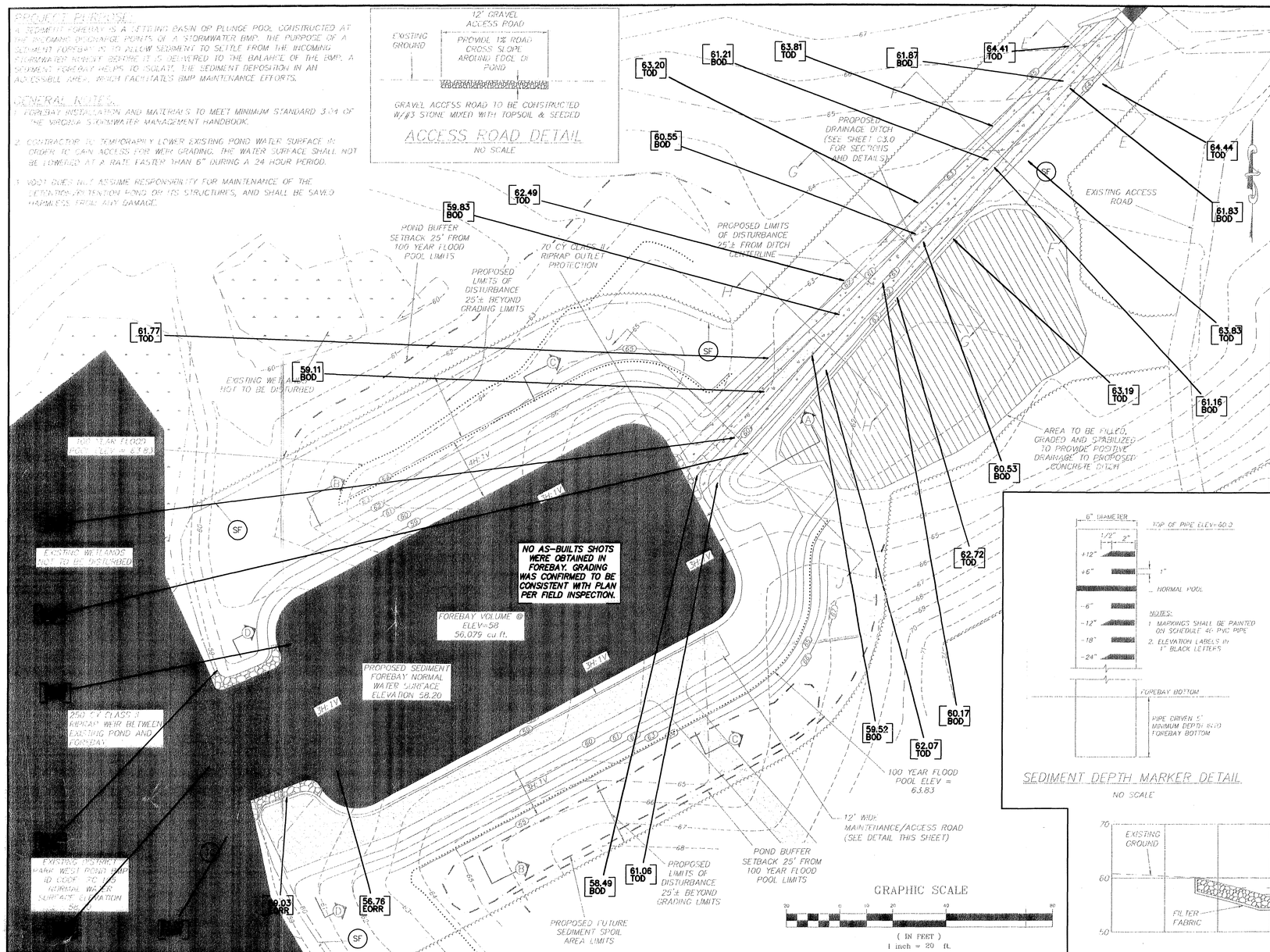

TURBIDITY CURTAIN

TYPICAL LAYOUTS:
STREAMS, PONDS & LAKES (PROTECTED & NON-TIDAL)

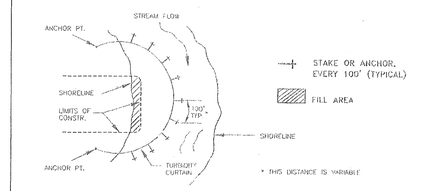

TIDAL WATERS AND/OR HEAVY WIND & WAVE ACTION

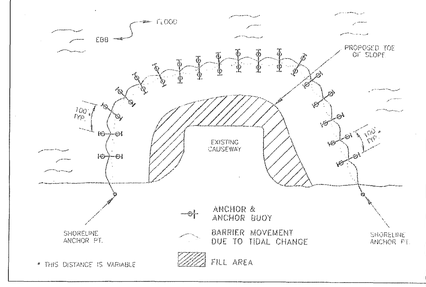

SOURCE: ADAPTED FROM FLORIDA DEPARTMENT OF TRANSPORTATION ROAD AND DESIGN SPECIFICATIONS

PLATE. 5.27

NOTES:
1. MARKINGS SHALL BE PAINTED ON SCHEDULE 40 PVC PIPE
2. ELEVATION LABELS IN 1" BLACK LETTERS

SEDIMENT DEPTH MARKER DETAIL
NO SCALE

FOREBAY MAINTENANCE PLAN:

1. A FIXED DEPTH SEDIMENT MARKER SHALL BE INSTALLED IN THE FOREBAY IN ORDER TO MONITOR SEDIMENT DEPOSITION. THE OWNER SHALL MONITOR THE FOREBAY AT A MINIMUM OF ONCE EVERY 2 MONTHS OR MORE OFTEN BASED ON THE AMOUNT OF DEVELOPMENT WITHIN THE UPSTREAM WATERSHED.
2. SEDIMENT SHOULD BE REMOVED FROM THE FOREBAY EVERY 3 TO 5 YEARS OR WHEN 6 TO 12 INCHES HAS ACCUMULATED.
3. DRAINING OR PUMPING AND A PARTIAL TEMPORARY DRAWDOWN OF THE PERMANENT POOL MAY BE NECESSARY. REFER TO THE VIRGINIA EROSION AND SEDIMENT CONTROL MANUAL, 1992 EDITION, FOR PROPER DEWATERING METHODS.
4. EXCAVATED MATERIAL SHALL BE PLACED IN THE SEDIMENT DISPOSAL AREA IDENTIFIED ON THIS PLAN SHEET. THE MATERIAL SHALL BE SPREAD OUT, DRIED AND SEEDED IN ACCORDANCE WITH THE SEEDING SPECIFICATIONS IN THE VIRGINIA EROSION AND SEDIMENT CONTROL MANUAL, 1992 EDITION.
5. SLOPES AROUND THE FOREBAY SHALL BE MAINTAINED BY MOWING AT LEAST TWICE PER YEAR. ONCE IN THE SPRING AND ONCE IN THE FALL. RESEEDING OF THE SLOPES TO ENSURE ADEQUATE GROUND COVER SHALL BE PERFORMED AS NECESSARY IN ACCORDANCE WITH THE SEEDING SPECIFICATION IN THE VIRGINIA EROSION AND SEDIMENT CONTROL MANUAL, 1992 EDITION.

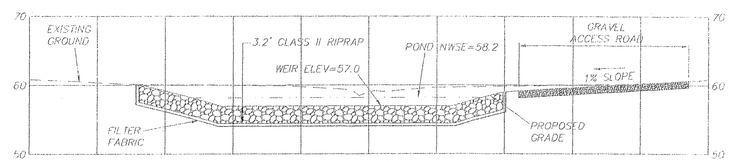

SECTION D-D

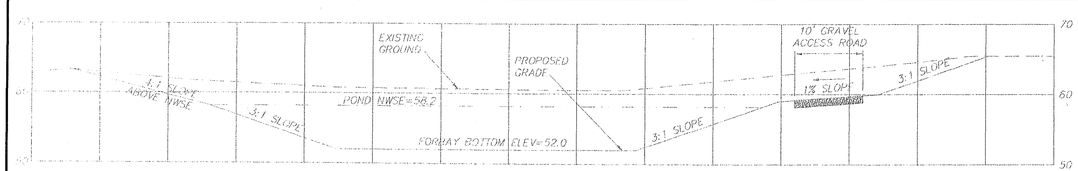

SECTION B-B

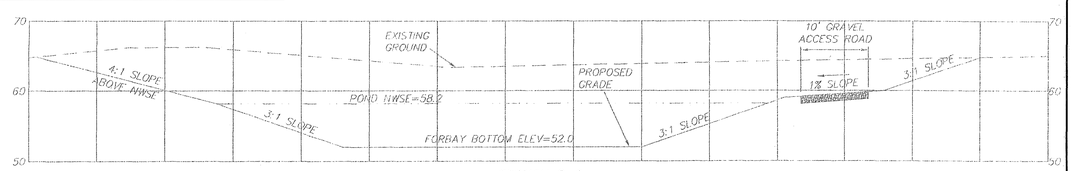

SECTION C-C

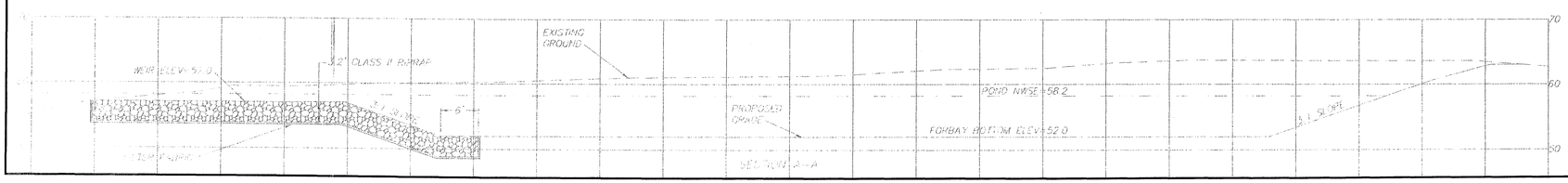

SECTION A-A

SECTION SCALE:
HORZ.: 1"=10'
VERT.: 1"=10'

STORMWATER RECORD DRAWINGS-4/10/06

TIMMONS GROUP
THIS DRAWING PREPARED AT THE CORPORATE OFFICE
1001 Boulders Parkway, Suite 300 | Richmond, VA 23225
TEL 804.200.6500 FAX 804.560.1016 www.timmons.com
YOUR VISION ACHIEVED THROUGH OURS.

Site Development | Residential | Infrastructure | Technology

DATE	REVISION DESCRIPTION
7/8/05	REVISED PER COMMENTS FROM COUNTY
7/25/05	ADDRESSED COMMENTS
11/11/05	ADDRESSED COMMENTS
4/10/06	AS BUILT

DATE	6/6/2005
DRAWN BY	M. CLAUD
DESIGNED BY	M. CLAUD
CHECKED BY	A. GOULD
SCALE	AS SHOWN

WARHILL SITE - E&SC #3 - STORM TRUNK
JAMES CITY COUNTY, VIRGINIA
FORBAY GRADING PLAN

JOB NO. 22303
SHEET NO. C9.2

These plans and associated documents are the exclusive property of TIMMONS GROUP and may not be reproduced in whole or in part and shall not be used for any purpose whatsoever, inclusive, but not limited to construction, bidding, and/or construction staking without the express written consent of TIMMONS GROUP.

O:\22303\as-builts\22303CD92-ASBLT.dwg, 3/26/2007 7:38:56 AM

WARHILL SITE
WESTERN POND (PC 105) DAM RENOVATIONS
SITE PLAN No. SP-82-05
(E & SC PHASE #3B)

JAMES CITY COUNTY, VA

AS BUILT

SHEET INDEX

TITLE	SHEET
COVER SHEET	C1.0
~~ENVIRONMENTAL INVENTORY~~	~~C1.1~~
~~DRAINAGE AREA LAYOUT~~	~~C1.2~~
~~EROSION AND SEDIMENT CONTROL NOTES & DETAILS~~	~~C1.3 C1.4A~~
EROSION AND SEDIMENT CONTROL NOTES & DETAILS	C1.4
PLAN & DETAILS	C1.5
SECTIONS	C1.6

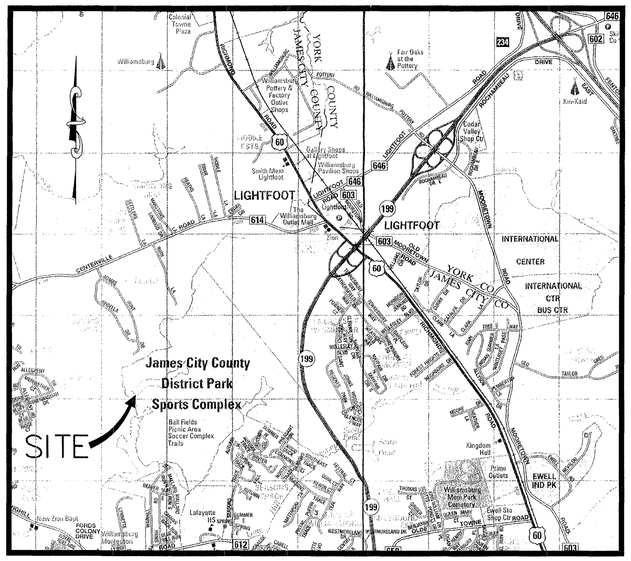

Copyright ADC The Map People Permitted Use #20399659

VICINITY MAP

SCALE: 1" = 2,000'

SPECIAL NOTE: THE REGIONAL STORM TRUNK LINE CANNOT BE PLACED INTO SERVICE TO HANDLE INCREASED RUNOFF FROM DISTURBED AND/OR IMPROVED (PAVED) AREAS UNTIL ALL FEDERAL AND STATE WETLAND, DAM SAFETY OR OTHER APPLICABLE PERMITS ARE SECURED FOR THE DISTRICT PARK WEST POND AND THE DAM IMPROVEMENTS AND FOREBAY ARE COMPLETED AND READY TO ACCEPT DRAINAGE FROM UPLAND SITES.

RESPONSIBLE LAND DISTURBER: William E. Richards (0402-21759)

DISTURBED AREA = 2.50 acres

TOTAL AREA OF SITE = 588.21 acres

IMPERVIOUS COVER PROPOSED = 0 sq. ft.

THIS PROJECT IS LOCATED IN THE POWHATAN CREEK WATERSHED (SUBWATERSHED 205 AND CATCHMENT 205-108-1) . SPECIAL STORMWATER CRITERIA APPLIES.

STORMWATER MANAGEMENT FOR THIS PORTION OF THE PROJECT WILL BE SATISFIED BY MASTER STORMWATER PLANNING FOR THE WARHILL TRACT WHICH INCLUDES PROPOSED UPGRADES TO THE DISTRICT PARK WEST POND, COUNTY BMP ID CODE: PC105.

CURTIS CONTRACTING, INC.

DEVELOPER

Contact: Andy Curtis
Phone: (804) 843-4633
Fax: (804) 842-2545
P.O. Box 769
West Point, VA 23181

DATE: 6/22/05

APPROVED
James City County
Environmental Division
By:
Date: 04-18-07

REVISIONS

DATE	SHEET NUMBERS	DATE	SHEET NUMBERS
7-25-05	ALL		
8-05-05	ALL		
4-10-06	C1.5		
4-11-07	C1.0, C1.4, C1.5, C1.6		

STORMWATER RECORD DRAWINGS-4/10/06

COMMONWEALTH OF VIRGINIA
MICHAEL L. CLAUD
No. 033566
4/11/2007
PROFESSIONAL ENGINEER

THIS DRAWING PREPARED AT THE
CORPORATE OFFICE
1001 Boulders Parkway, Suite 300 | Richmond, VA 23225
TEL 804.200.6500 FAX 804.560.1016 www.timmons.com

YOUR VISION ACHIEVED THROUGH OURS.

Site Development | Residential | Infrastructure | Technology

Centerville Road
James City County, Virginia
P.O. BOX 769
(804) 843-4633

TIMMONS GROUP

PROJECT
WARHILL SITE WESTERN POND (PC105) DAM RENOVATIONS

OWNER & DEVELOPER
Curtis Contracting Inc.

JOB NO.
22303

SHEET NO.
C1.0

These plans and associated documents are the exclusive property of TIMMONS GROUP and may not be reproduced in whole or in part and shall not be used for

O:\22303\ab-builts\22303CV-POND-ASBLT.dwg, 4/11/2007 9:33:14 AM

DRAINAGE NOTES

1. ALL CONSTRUCTION AND MATERIALS SHALL CONFORM WITH THE VIRGINIA STORMWATER MANAGEMENT HANDBOOK, VIRGINIA DEPARTMENT OF TRANSPORTATION'S ROAD AND BRIDGE SPECIFICATIONS DATED 2002, AND ROAD AND BRIDGE STANDARDS, DATED FEBRUARY 2001, AS AMENDED BY CONTRACT PROVISIONS AND THESE PLANS. ALL CONSTRUCTION AND MATERIALS SHALL CONFORM WITH JAMES CITY COUNTY STANDARDS AND SPECIFICATIONS, IF MORE STRINGENT.

2. ALL CONCRETE PIPE JOINTS ARE TO BE SEALED ACCORDING TO VDOT STANDARDS AND SPECIFICATIONS.

3. ALL STORM SEWERS SHALL BE ASTM, C-76, CLASS III, EXCEPT AS NOTED.

4. IF DURING CONSTRUCTION, THE EXISTING GROUND ELEVATIONS SHOWN ON THESE PLANS ARE FOUND TO DIFFER SIGNIFICANTLY FROM THE ELEVATIONS IN THE FIELD, THE CONTRACTOR MUST NOTIFY THE ENGINEER IMMEDIATELY FOR AN ADJUSTMENT IN ELEVATIONS.

MAINTENANCE PLAN

A maintenance program is required to ensure the Stormwater Management (SWM)/Best Management Practice (BMP) facility functions as designed and to provide for reasonable aesthetic conditions. Proper maintenance is encouraged to prevent the introduction of debris and sediment at inflow locations, pretreatment areas, the BMP itself, its principal control structures and downstream waterways. Following installation and establishment of vegetation in disturbed site areas, inspections for sediment buildups will be performed at least quarterly. It is anticipated that under normal conditions, sediment removal will be required once every 5 to 10 years. If other construction or related land-disturbing activities are performed upslope of the BMP, adequate protection measures should be implemented with inspections performed at least once weekly.

The Owner or its designated representative will inspect the SWM/BMP structure after each significant rainfall event or the following working day if a weekend or holiday occurs. A significant rainfall for this structure is defined as one (1) inch or more of gauged rainfall within a 24 hour period.

BMP Description: The Warhill Site District Park West Pond PC105 serves a drainage area of approximately 187 acres associated with development of the Warhill Tract which includes construction of a Community College, High School and Sports Stadium. The facility is a 10 point, wet-type detention facility. A wet-type detention pond temporarily stores runoff and normally maintains a permanent wet pool during non-rainfall periods. Typically draw down times range from 24 to 72 hours following a storm event. Principal structures associated with the BMP consist of a concrete inlet box, a 4'x4' concrete box culvert and 50 ft. wide, grass-lined trapezoidal shaped emergency overflow channel. There is 1 notch in the inlet box to provide for water quality drawdown. During the 100-year storm, the maximum water level should rise to about 2.9 feet above the top of the riser and within 1.1 feet below the top of dam. During this type of larger storm event, the emergency spillway, which is located through the embankment along the northwest side, will discharge flow. If functioning properly, normal storm events should reach an elevation just below the top of the riser and the pond should draw down in about 24 to 36 hours. A sediment forebay is included with this BMP and is located at the east end of the pond. The majority of drainage to the pond will enter through the forebay.

Inspection and maintenance of the facility will consist of the following additional measures:

1. Inspect the forebay for sediment buildup by visual observation and a physical determination of sediment depth within the forebay storage area. If the sediment reaches a depth of 3'-0" above the bottom (or Cleanout Elevation of 55.0), removal is required. At the same time, or at least once per year, clean the pond inlet box and outlet pipes of accumulated sediments. Dispose of sediments removed from the facility at an acceptable disposal area.

2. Perform maintenance mowing of areas surrounding the BMP & Forebay at least twice each year. Grasses such as tall fescue should be mowed in early summer after emergence of the heads on cool season grasses and in late fall to prevent seeds of annual weeds from maturing. Mowing of legumes can be less frequent. Trees, shrubs and woody vegetation are not be permitted to grow along or on any part of the embankment that was constructed using engineered (compacted) fills and must be cleared to a point at least 25 feet beyond the toe of slope of the embankment.

3. Perform soil sampling on stabilized pond soil areas at least once every 4 years. Soil sampling and testing should be performed by qualified independent soil testing laboratory such as VPI&SU. Apply additional lime and fertilizer in accordance with test recommendations.

4. In stabilized pond areas, if vegetation covers less than 40 % of soil surfaces, lime, fertilize and seed in accordance with recommendations for new seedlings. If vegetation covers more than 40 % but less than 70 % of soil surfaces, lime, fertilize and over seed in accordance with current seeding recommendations or requirements of the Virginia Erosion and Sediment Control Handbook (VESCH).

5. Perform quarterly inspections of the inlet box and crest spillway for the observance of collected trash and debris. Immediately remove any trash or debris that prevents the movement of water. Remove any trash and litter downstream and at storm drain or channel inflow locations to maintain the integrity of the structure and provide an attractive appearance.

6. Perform yearly structural inspections of the facility for damage. Structural inspection shall be performed on the concrete inlet box, outlet culvert, concrete outlet channel along the downstream face of the dam and pond embankment. If damage is evident, further investigation by a professional engineer may be required to assess the integrity of the structure.

7. Perform quarterly inspections of the graded side slopes of the facility for signs of animal/rodent borrows or slope erosion. Immediately perform necessary repairs, refilling or reseeding.

8. Perform yearly observations of perimeter areas surrounding the facility to ensure changes in land use, topography or access have not occurred and do not affect the operation, maintenance, access or safety features as provided. Appropriate action is required to ensure adequacy and to provide a clear, safe passage for maintenance vehicles to the engineered embankment and principal flow control structures.

9. Record Keeping. The owner or designated representative shall keep reasonable, accurate written records of inspections performed for the structure. Records shall document routine maintenance and/or repairs performed. Copies shall be provided to the County upon request.

10. The facility shall not accept additional drainage or be modified in any way without prior consent or approval by the Environmental Division of James City County.

EROSION CONTROL NARRATIVE SEQUENCE OF CONSTRUCTION:

1. THIS PROJECT SHALL BE GENERALLY CONSTRUCTED ACCORDING TO THE SEQUENCE OF CONSTRUCTION PROVIDED BELOW. IF THE CONTRACTOR NEEDS TO DEVIATE FROM THIS SEQUENCE, HE SHALL NOTIFY THE COUNTY.

2. THE CONTRACTOR SHALL ARRANGE A PRECONSTRUCTION MEETING WITH THE COUNTY AND THE ENGINEER 72 HOURS PRIOR TO THE START OF ANY CONSTRUCTION ACTIVITIES ON THE STORM SEWER TRUNK SYSTEM.

3. PRIOR TO BEGINNING WORK THE CONTRACTOR SHALL CALL MISS UTILITY TO LOCATE ALL EXISTING UTILITIES IN THE WORK AREA.

4. DURING CONSTRUCTION ACTIVITIES MAINTAIN ALL EROSION AND SEDIMENT CONTROL MEASURES THROUGHOUT THE DURATION OF THE WORK AND INSPECT AFTER ALL RUNOFF PRODUCING RAINFALL EVENTS.

5. EROSION AND SEDIMENT CONTROL MEASURES SHALL NOT BE REMOVED UNTIL THE SITE IS STABILIZED AND APPROVED BY THE COUNTY EROSION AND SEDIMENT CONTROL INSPECTOR.

6. TIMBER AREAS OF SITE AS NEEDED TO INSTALL PERIMETER EROSION AND SEDIMENT CONTROL MEASURES. PERIMETER EROSION & SEDIMENT CONTROL MEASURES MUST BE IN PLACE AND FUNCTIONAL PRIOR TO CLEARING & GRADING OF UPSTREAM AREAS.

7. DRAW DOWN THE WATER ELEVATION APPROXIMATELY 2 FEET. MAINTAIN THE WATER ELEVATION AT THIS ELEVATION THROUGHOUT CONSTRUCTION TO THE MAXIMUM EXTENT PRACTICABLE TO KEEP THE WORK AREA DRY.

8. BEGIN CLEARING AND GRUBBING OPERATIONS WITHIN THE LIMITS SHOWN ON SHEET C1.5. PROVIDE TEMPORARY SEEDING AS SOON AS PRACTICABLE ONCE FINAL GRADES HAVE BEEN ACHIEVED.

9. BEGIN CONSTRUCTION OF THE PROPOSED OUTLET STRUCTURES AND GRADING OPERATIONS FOR THE DAM. UPON COMPLETION OF THE PROPOSED OUTLET STRUCTURES, PRESSURE GROUT THE EXISTING CMP DRAINPIPE IN PLACE AND REMOVE THE EXISTING CMP RISER PIPE.

10. ONCE THE DAM FILL HAS REACHED THE DESIGN HEIGHT, INSTALL THE GRAVEL ACCESS ROAD, PLACE RIPRAP SLOPE PROTECTION, PLACE TOPSOIL AND SEED ALL DISTURBED AREAS.

GENERAL DAM CONSTRUCTION NOTES:

1. A QUALIFIED GEOTECHNICAL ENGINEER SHALL BE ON-SITE DURING ALL FILLING OPERATIONS. PLACEMENT AND COMPACTION OF THE GENERAL DAM FILL SHALL BE MONITORED AND TESTED BY THE GEOTECHNICAL ENGINEER. ALL SUBGRADES TO RECEIVE FILL SHALL BE EXAMINED BY THE GEOTECHNICAL ENGINEER.

2. MATERIAL USED FOR FILL SHALL BE SELECT MATERIAL FREE FROM ROCKS, ROOT MASS OR CLODS. FILL SHALL BE PLACED IN LIFTS NOT TO EXCEED 8" AND EACH LIFT SHALL BE COMPACTED TO A MINIMUM 95% OF STANDARD PROCTOR. GEOTECHNICAL ENGINEER SHALL BE RESPONSIBLE FOR DETERMINING IF MATERIAL IS SUITABLE FOR USE AS FILL ON THE DAM.

3. THE DESIGN HEIGHT OF THE EMBANKMENT SHALL BE INCREASED BY A MINIMUM OF 4 INCHES TO ENSURE THAT THE DESIGN TOP OF FILL ELEVATION WILL BE MAINTAINED AFTER SETTLEMENT HAS TAKEN PLACE.

4. MINIMUM COMPACTION REQUIREMENTS MUST BE MET AT CRITICAL POINTS (AGAINST THE CONCRETE WEIR, WING WALLS, AND OUTLET BARRELS). THE MOISTURE CONTENT OF THE FILL MATERIALS SHALL BE MAINTAINED IN THE RANGE OF +/- TWO TO THREE PERCENTAGE POINTS OF OPTIMUM MOISTURE CONTENT.

5. CONTRACTOR SHALL PLACE EXCAVATED MATERIAL THAT IS UNSUITABLE FOR USE AS FILL WITHIN THE TEMPORARY SOIL STOCKPILE AREA LOCATION SHOWN ON SHEET C1.1. CONTRACTOR SHALL GRADE AND SEED EXCESS MATERIAL PER EROSION AND SEDIMENT MEASURES SPECIFIED ON THIS SHEET.

6. PLACE THREE INCHES OF TOPSOIL ON DAM SLOPES AFTER GRADING COMPLETION. TOPSOIL SHALL BE TRACKED (PERPENDICULAR TO THE AXIS OF THE DAM) WITH TRACKING EQUIPMENT. PERMANENTLY SEED THE DAM SLOPE PER SEEDING NOTES ON SHEET C1.3.

7. THE DAM SHALL BE CONSTRUCTED ACCORDING TO THE REQUIREMENTS OF THE VIRGINIA STORMWATER MANAGEMENT HANDBOOK.

INSPECTION REQUIREMENTS

1. PRIOR TO INSTALLATION, THE CONTRACTOR SHALL SUBMIT TO ENGINEER AND COUNTY PRODUCT MATERIAL SUBMITTALS ON ALL PIPE INCLUDING INFORMATION ON PIPE CLASS, DATE AND LOCATION OF MANUFACTURE, AND COMPLIANCE WITH APPROPRIATE ASTM STANDARDS.

2. PRIOR TO FABRICATION, THE CONTRACTOR SHALL SUBMIT TO THE ENGINEER AND COUNTY FOR REVIEW AND APPROVAL SHOP DRAWINGS ON ALL PRE-MANUFACTURED STRUCTURES.

3. TO VERIFY GENERAL COMPLIANCE WITH THE CONSTRUCTION SPECIFICATIONS, FIELD OBSERVATION BY THE SITE INSPECTOR OF THE FOLLOWING ITEMS SHALL TAKE PLACE ON A DAILY BASIS.

- PIPE JOINTS: NOTE ANY GAPS IN JOINTS AND DISTANCE AT MAXIMUM GAP LOCATION
- JOINTS BETWEEN PIPE AND PRE-MANUFACTURED STRUCTURES
- BACKFILL MATERIAL: NOTE TYPE OF MATERIAL AND BACKFILL LIFT HEIGHTS
- BACKFILL COMPACTION TESTING

4. THE SITE INSPECTOR SHALL RECORD THE INFORMATION LISTED ABOVE IN ITEM #3 ON A DAILY BASIS AND SHALL SUBMIT REPORTS TO THE ENGINEER AND COUNTY ON A WEEKLY BASIS FOR REVIEW.

5. IF AT ANY POINT THE INSPECTOR HAS ANY QUESTIONS REGARDING WHETHER OR NOT THE INSTALLATION CONFORMS WITH THE PROJECT SPECIFICATIONS, HE SHALL NOTIFY THE ENGINEER AND COUNTY IMMEDIATELY.

6. THESE DAM IMPROVEMENTS WILL REQUIRE SUBMISSION, REVIEW, AND APPROVAL OF A RECORD DRAWING (AS-BUILT) AND CONSTRUCTION CERTIFICATION.

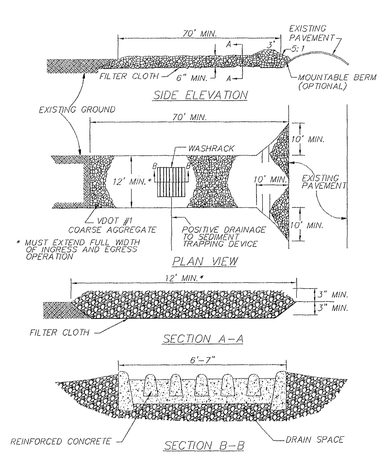

CE STONE CONSTRUCTION ENTRANCE 3.02-1
NO SCALE

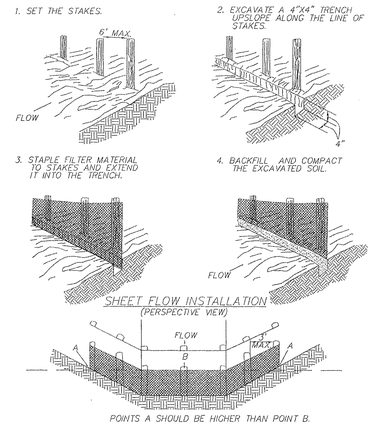

SF CONSTRUCTION OF A SILT FENCE (WITHOUT WIRE SUPPORT) 3.05-2
NO SCALE

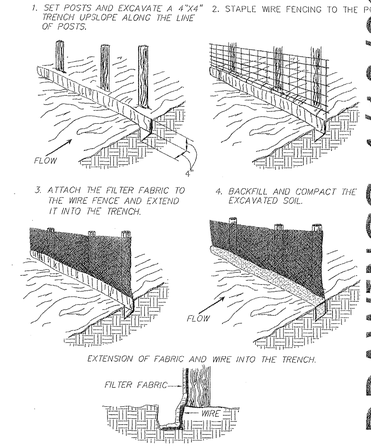

SF CONSTRUCTION OF A SILT FENCE (WITH WIRE SUPPORT) 3.05-1
NO SCALE

CONSTRUCTION AND INSTALLATION NOTES

1. THE CONTRACTOR SHALL KEEP THE COUNTY ENVIRONMENTAL DIVISION NOTIFIED OF PROGRESS AT ALL MILESTONE STAGES OF CONSTRUCTION AND/OR IF ANY UNUSUAL SITE OR SOIL CONDITIONS ARE ENCOUNTERED DURING CONSTRUCTION OF STORM DRAINAGE CONVEYANCE SYSTEMS.

2. THE CONTRACTOR IS REQUIRED TO CONTACT MISS UTILITY AT 1-800-552-7001 AND HAVE EXISTING UTILITIES LOCATED PRIOR TO UNDERTAKING ANY EXCAVATIONS. THIS ACTION DOES NOT RELIEVE THE CONTRACTOR OF INDEPENDENT VERIFICATION OF EXISTING UTILITIES BY HAND EXCAVATION, TEST HOLES OR OTHER METHODS BY THEIR OWN FORCE.

3. THE CONTRACTOR SHALL ATTEMPT TO SCHEDULE CONSTRUCTION ACTIVITIES DURING DRY OR PERIODS OF LOW FLOW TO THE GREATEST EXTENT POSSIBLE.

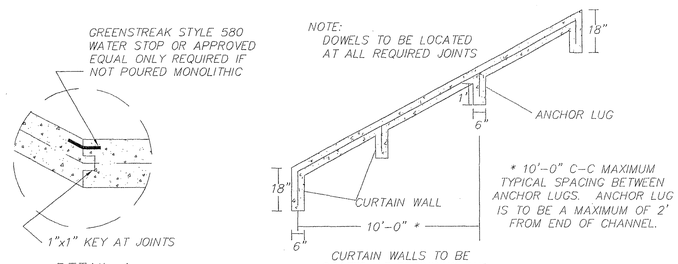

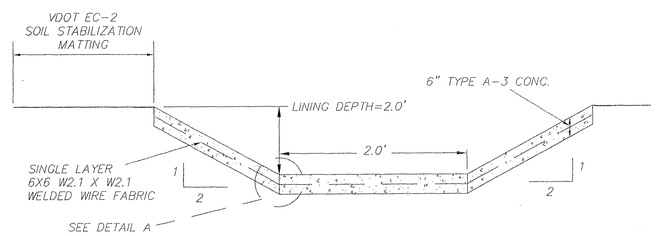

TYPICAL SECTION CONCRETE CHANNEL
NO SCALE

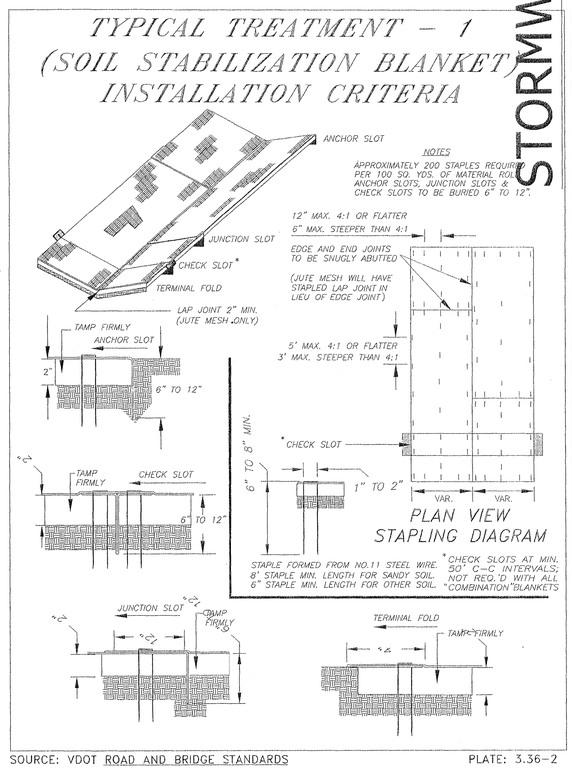

SOURCE: VDOT ROAD AND BRIDGE STANDARDS PLATE: 3.36-2

STORMWATER RECORD DRAWINGS-4/10/06

COMMONWEALTH OF VIRGINIA
MICHAEL L. CLAUD
No. 039598
4/11/2007
PROFESSIONAL ENGINEER

THIS DRAWING PREPARED AT THE CORPORATE OFFICE
1001 Boulders Parkway, Suite 300 | Richmond, VA 23225
TEL 804.200.6500 FAX 804.560.1016 www.timmons.com

YOUR VISION ACHIEVED THROUGH OURS.

Site Development | Residential | Infrastructure | Technology

DATE	REVISION DESCRIPTION
7-25-05	PER COUNTY COMMENTS
8-05-05	PER COUNTY COMMENTS
4/11/07	ADD AS BUILT SHEET

DATE	6/22/05
DRAWN BY	C.ALMARODE
DESIGNED BY	M. CLAUD
CHECKED BY	D. GOULD
SCALE	AS NOTED

TIMMONS GROUP

WARHILL SITE WESTERN POND (PC105) DAM RENOVATIONS
JAMES CITY COUNTY, VIRGINIA

EROSION & SEDIMENT CONTROL NOTES & DETAILS

JOB NO.	22303
SHEET NO.	C1.4

These plans and associated documents are the exclusive property of TIMMONS GROUP and may not be reproduced in whole or in part and shall not be used for

O:\22303\as-builts\22303CD14-POND-ASBLT.dwg, 4/11/2007 9:28:12 AM

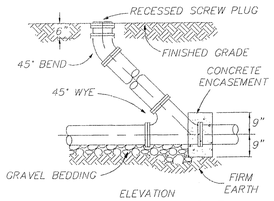

TYPICAL CLEANOUT
NO SCALE

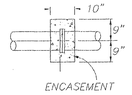

HATCH LEGEND

- APPROXIMATE NORMAL WATER SURFACE LIMITS
- PROPOSED LIMITS OF EC-2 SOIL STABILIZATION FABRIC
- PROPOSED GRAVEL ACCESS ROAD LIMITS (SEE DETAIL THIS SHEET)

WATER SURFACE ELEVATIONS	
NORMAL	58.20'
1 YEAR STORM	60.14'
2 YEAR STORM	61.02'
10 YEAR STORM	62.16'
100 YEAR STORM	63.83'

JOINT SPACING:
1. MAXIMUM 20'-0" C/C
2. MAXIMUM 12'-0" FROM CORNER
3. AT CHANGES IN WALL HEIGHT

TYPICAL JOINT DETAILS FOR CONCRETE PADS
NOT TO SCALE

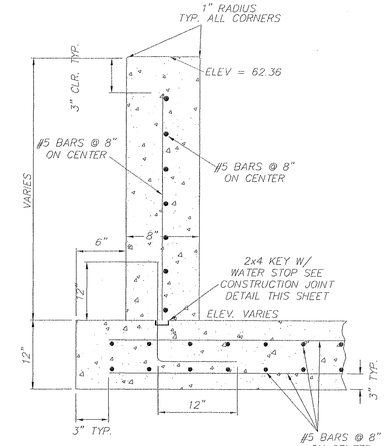

SECTION E-E WEIR WALL
NOT TO SCALE

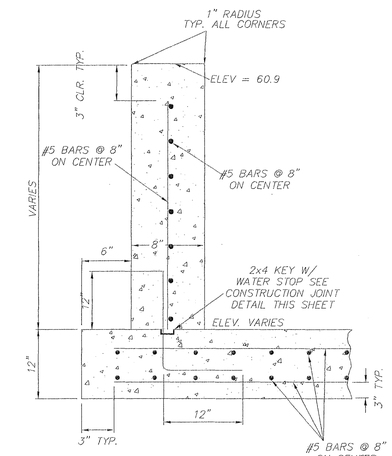

SECTION D-D WEIR WALL
NOT TO SCALE

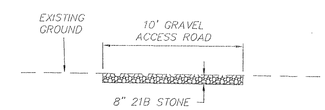

ACCESS ROAD DETAIL
NO SCALE

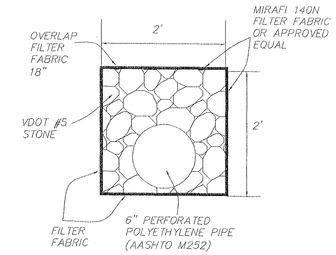

TOE DRAIN DETAIL
NO SCALE

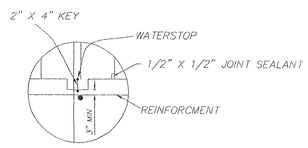

KEYWAY CONSTRUCTION JOINT DETAIL
NOT TO SCALE

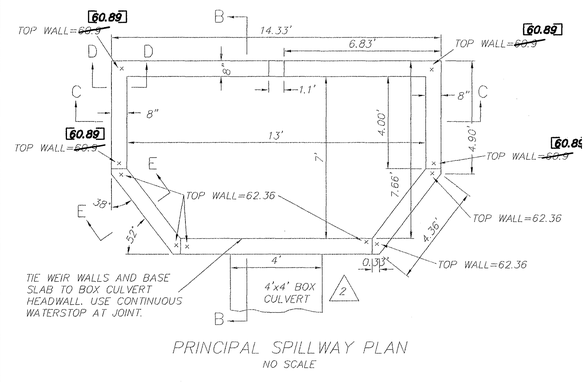

PRINCIPAL SPILLWAY PLAN
NO SCALE

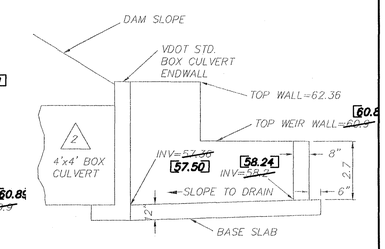

SECTION B-B
NO SCALE

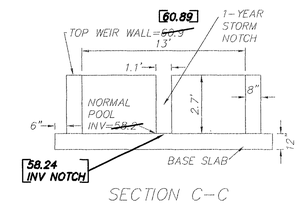

SECTION C-C
NO SCALE

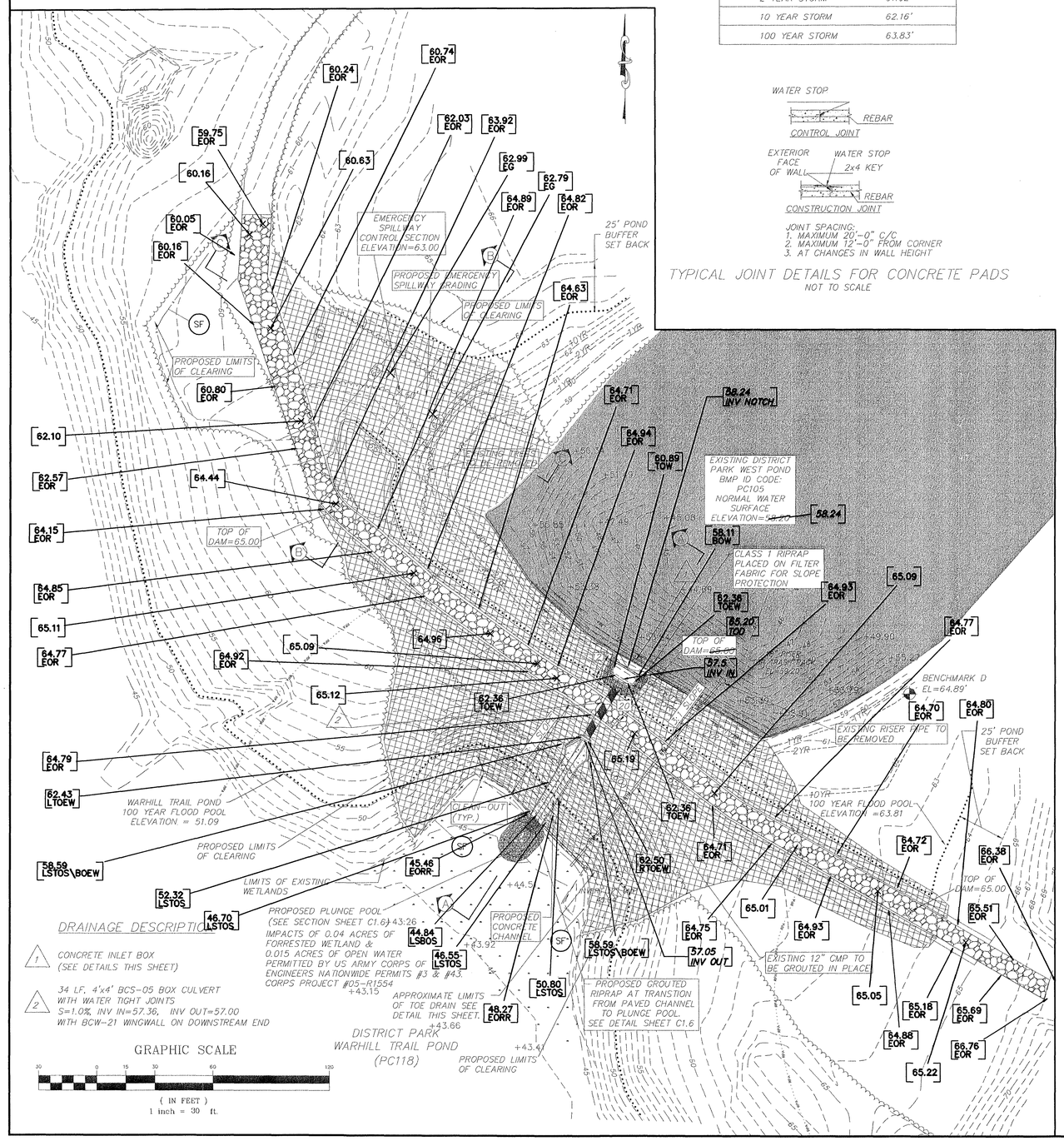

STORMWATER RECORD DRAWINGS-4/10/06

COMMONWEALTH OF VIRGINIA
MICHAEL L. CLAUD
No. 033586
4/11/2007
PROFESSIONAL ENGINEER

THIS DRAWING PREPARED AT THE **CORPORATE OFFICE**
1001 Boulders Parkway, Suite 300 | Richmond, VA 23225
TEL 804.200.6500 FAX 804.560.1016 www.timmons.com

YOUR VISION ACHIEVED THROUGH OURS.

Site Development | Residential | Infrastructure | Technology

DATE	REVISION DESCRIPTION
7/25/2005	REVISED PER COUNTY COMMENTS
8/05/2005	REVISED PER COUNTY COMMENTS
11/11/2005	ADJUSTED DESIGN OF INLET STRUCTURE AND BOX CULVERT
4/10/06	AS BUILT
4/11/07	ADDRESSED AS BUILT COMMENTS

DATE	6/22/2005
DRAWN BY	M. CLAUD
DESIGNED BY	M. CLAUD
CHECKED BY	A. GOULD
SCALE	AS SHOWN

TIMMONS GROUP

WARHILL SITE WESTERN POND (PC105) DAM RENOVATIONS
JAMES CITY COUNTY, VIRGINIA
PLAN & DETAILS

JOB NO.	SHEET NO.
22303	C-1.5

These plans and associated documents are the exclusive property of TIMMONS GROUP and may not be reproduced in whole or in part and shall not be used for any purpose whatsoever, inclusive, but not limited to construction, bidding, and/or construction staking without the express written consent of TIMMONS GROUP.

O:\22303\as-builts\22303CD15-POND-ASBLT.dwg, 4/16/2007 1:01:13 PM

DRAINAGE DESCRIPTION

1. CONCRETE INLET BOX (SEE DETAILS SHEET C-1.5)
2. 34 LF, 4'x4' BCS-05 BOX CULVERT WITH WATER TIGHT JOINTS S=1.0%, INV IN=57.36, INV OUT=57.00 WITH BCW-21 WINGWALL ON DOWNSTREAM END

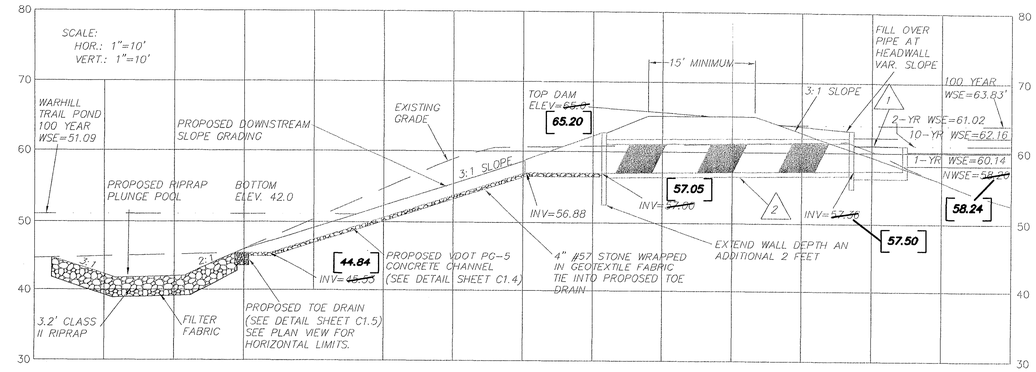

SECTION A-A
(SEE SHEET C-1.5)

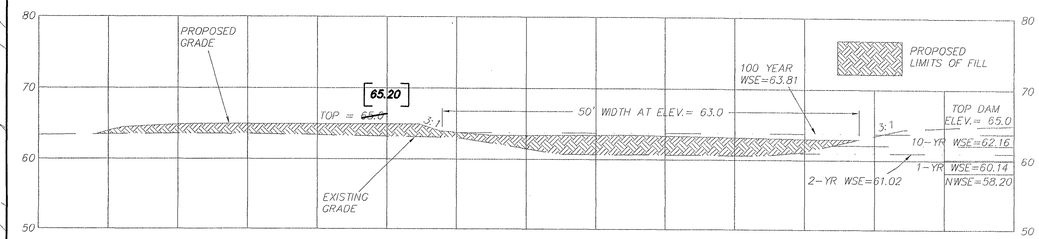

SECTION B-B
(SEE SHEET C-1.5)

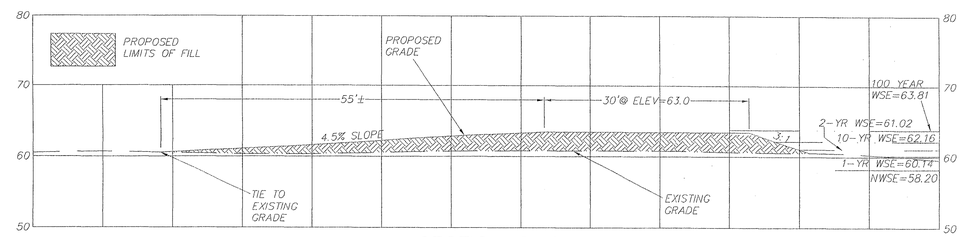

SECTION C-C
(SEE SHEET C-1.5)

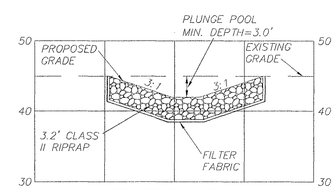

SECTION D-D

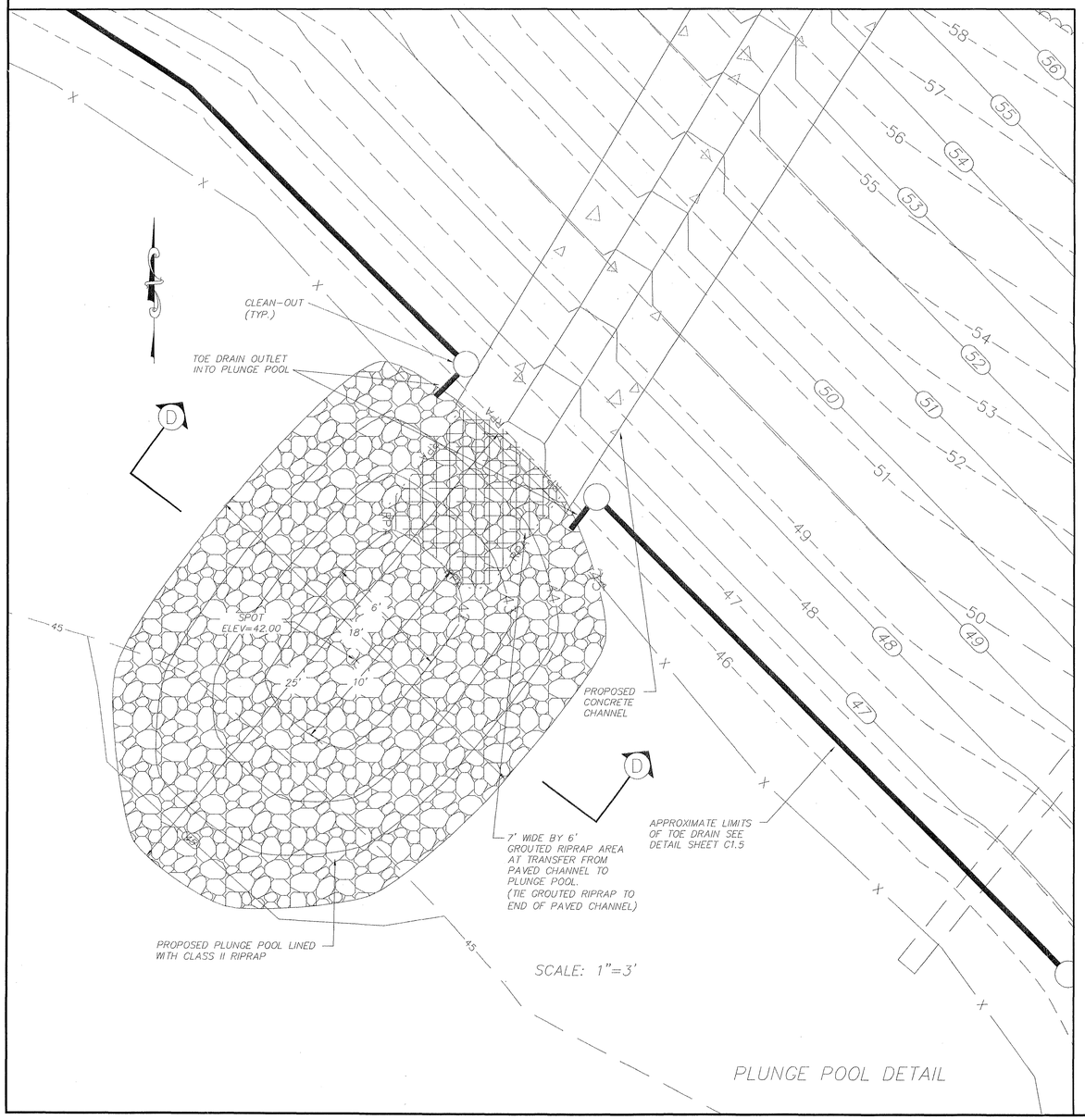

PLUNGE POOL DETAIL

STORMWATER RECORD DRAWINGS-4/10/06

COMMONWEALTH OF VIRGINIA
MICHAEL L. CLAUD
No. 033586
4/11/2007
PROFESSIONAL ENGINEER

THIS DRAWING PREPARED AT THE
CORPORATE OFFICE
1001 Boulders Parkway, Suite 300 | Richmond, VA 23225
TEL 804.200.6500 FAX 804.560.1016 www.timmons.com

YOUR VISION ACHIEVED THROUGH OURS.

Site Development | Residential | Infrastructure | Technology

DATE	REVISION DESCRIPTION
7/25/2005	REVISED PER COUNTY COMMENTS
8/5/2005	REVISED PER COUNTY COMMENTS
11/11/2005	ADJUSTED DESIGN OF INLET STRUCTURE & BOX CULVERT
4/11/07	ADD AS BUILT SHEET

DATE	6/22/2005
DRAWN BY	M. CLAUD
DESIGNED BY	M. CLAUD
CHECKED BY	A. GOULD
SCALE	AS SHOWN

TIMMONS GROUP

WARHILL SITE WESTERN POND (PC105) DAM RENOVATIONS
JAMES CITY COUNTY, VIRGINIA
SECTIONS

JOB NO.	22303
SHEET NO.	C-1.6

THIS DRAWING AND INFORMATION ARE THE PROPERTY OF TIMMONS GROUP. NOT MAY NOT BE REPRODUCED IN WHOLE OR IN PART NOR SHALL NOT BE USED FOR

O:\22303\as-builts\22303CD16-POND-ASBLT.dwg, 4/11/2007 9:29:22 AM

WARHILL SITE ROADWAYS AND IMPROVEMENTS SITE PLAN No. SP-143-05

JAMES CITY COUNTY, VA

AS BUILT

RECEIVED
MAR 30 2007
ENVIRONMENTAL DIVISION

SHEET INDEX

TITLE	SHEET
COVER SHEET	C1.0
~~SHEET LAYOUT PLAN~~	~~C1.1~~
~~ENVIRONMENTAL INVENTORY~~	~~C1.2~~
~~EROSION AND SEDIMENT CONTROL NOTES & DETAILS~~	~~C1.3 - C1.6~~
~~ROADWAY DRAINAGE AREA MAP~~	~~C1.7~~
~~ROADWAY TYPICAL SECTIONS~~	~~C2.0~~
~~ROADWAY GENERAL NOTES~~	~~C2.1~~
~~ROADWAY ALIGNMENT & SURVEY DATA~~	~~C2.2~~
~~PAVEMENT MARKING~~	~~C2.3~~
~~ROADSIDE DEVELOPMENT~~	~~C2.4~~
~~DRAINAGE NOTES~~	~~C3.0~~
~~DRAINAGE AREA LAYOUT~~	~~C3.1~~
~~GRAVITY SEWER DRAINAGE ANALYSIS~~	~~C4.0~~
~~WATER AND SEWER DETAILS~~	~~C4.1~~
ROADWAY PLAN SHEETS	C5.0 -C7.0
ROADWAY PROFILE SHEETS	C5.1 -C7.1
STADIUM ACCESS ROAD CORRIDOR STORMWATER & UTILITY PLAN & PROFILE	C8.0 - C8.1
OFFSITE STORM WATER PLAN & PROFILES	C9.0 - C9.2
~~OFFSITE UTILITY PLAN & PROFILES~~	~~C10.0 - C10.4~~
~~ROADWAY CROSS SECTIONS~~	~~C11.0 - C11.4~~

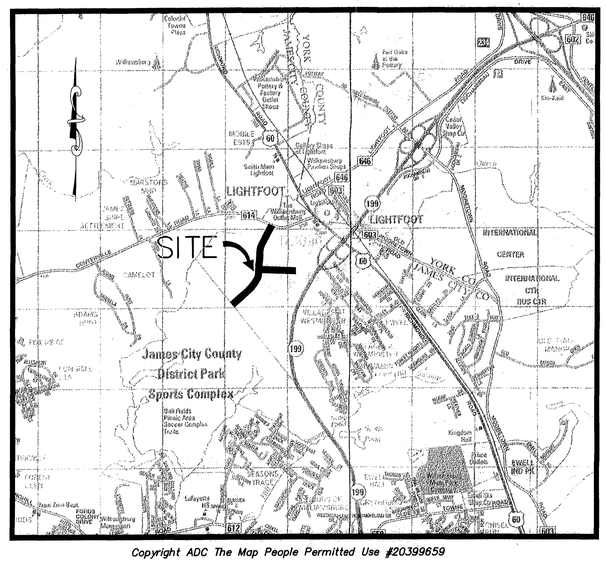

Copyright ADC The Map People Permitted Use #20399659

VICINITY MAP
SCALE: 1" = 2,000'

SPECIAL NOTE: THE REGIONAL STORM TRUNK LINE CANNOT BE PLACED INTO SERVICE TO HANDLE INCREASED RUNOFF FROM DISTURBED AND/OR IMPROVED (PAVED) AREAS UNTIL ALL FEDERAL AND STATE WETLAND, DAM SAFETY OR OTHER APPLICABLE PERMITS ARE SECURED FOR THE DISTRICT PARK WEST POND AND THE DAM IMPROVEMENTS AND FOREBAY ARE COMPLETED AND READY TO ACCEPT DRAINAGE FROM UPLAND SITES.

RESPONSIBLE LAND DISTURBER: WILLIAM E. RICHARDS (0402-21759)

DISTURBED AREA = 29.15 ACRES

TOTAL AREA OF SITE = 588.21 ACRES

IMPERVIOUS COVER PROPOSED = 140,965 sq. ft.

THIS PROJECT IS LOCATED IN THE POWHATAN CREEK WATERSHED (SUBWATERSHED 205) . SPECIAL STORMWATER CRITERIA APPLIES.

STORMWATER MANAGEMENT FOR THIS PORTION OF THE PROJECT WILL BE SATISFIED BY MASTER STORMWATER PLANNING FOR THE WARHILL TRACT WHICH INCLUDES PROPOSED UPGRADES TO THE DISTRICT PARK WEST POND, COUNTY BMP ID CODE: PC105.

NOTE: UNLESS OTHERWISE DENOTED, ALL REFERENCES TO STANDARD (STD.) ITEMS IN THESE PLANS REFER TO THE LATEST VDOT ROAD & BRIDGE STANDARDS INCLUDING REVISIONS.

STORMWATER RECORD DRAWINGS-4/10/06

CURTIS CONTRACTING, INC.

DEVELOPER

Contact: Andy Curtis
Phone: (804) 843-4633
Fax: (804) 842-2545
P.O. Box 769
West Point, VA 23181

SP-57-05
SP-59-05

DATE: 6/7/05
REVISED: 3/3/06

FINAL "L" ROAD/TRUNKLINE/ WATERLINE/SANITARY SEWER PLANS

APPROVED
James City County
Environmental Division
By: [illegible]
Date: 04-02-07

REVISIONS

DATE	SHEET NUMBERS	DATE	SHEET NUMBERS
7-11-05	ALL SHEETS		
7-25-05	1.2,1.5,2.4,3.1,4.0,5.0,		
	6.0,7.0,8.1,9.0,9.1,9.2		
11-11-05	1.5,3.0,9.0,9.1,9.2		
4-10-06	5.0,5.1,6.0,6.1,7.0,7.1,		
	8.0,8.1,9.0,9.1,9.2		
10-12-06	ALL SHEETS		

THIS DRAWING PREPARED AT THE CORPORATE OFFICE
1001 Boulders Parkway, Suite 300 | Richmond, VA 23225
TEL 804.200.6500 FAX 804.560.1016 www.timmons.com

YOUR VISION ACHIEVED THROUGH OURS.

Site Development | Residential | Infrastructure | Technology

TIMMONS GROUP

PROJECT: WARHILL SITE ROADWAYS AND IMPROVEMENTS

OWNER & DEVELOPER: Curtis Contracting Inc.
Centerville Road
James City County, Virginia
P.O. BOX 769
(804) 843-4633

JOB NO. 22303

SHEET NO. C1.0

These plans and associated documents are the exclusive property of TIMMONS GROUP and may not be reproduced in whole or in part and shall not be used for any purpose whatsoever, inclusive, but not limited to construction, bidding, and/or construction staking without the express written consent of TIMMONS GROUP.

O:\22303\dwg\as-builts\22303COV-asbilt.dwg, 10/12/2006 1:18:43 PM, Xerox.pc3

FINAL- STORM TRUNK & FOREBAY ASBUILTS SP-143-05; PC 105

WATER SYSTEM

[illegible] 6" DISCONNECT SLEEVE & GATE VALVE [illegible]

[illegible] 6" CAP [illegible]

[illegible] WATER FIRE HYDRANT (SEE ROUTE 614 PLANS)

SANITARY SEWER SYSTEM

MH#	STATION	OFFSET
(2)	12+40.71	57.85' L
(3)	14+09.12	17.00' L
(4)	16+38.09	19.50' L

NOTE:

1. [illegible] SANITARY SEWER STUBS AT MANHOLES AND CAP AT TERMINUS ENDS.

NOTE: LABEL ARROW DENOTES ACTUAL AS-BUILT LOCATION

STORM SEWER DRAINAGE DESCRIPTIONS

(MH-2) 1-ST'D JB-1 REQ'D STA 11+10.00
TOP=~~104.41'~~ H=~~9.95~~ [9.87']
[103.85']

(MH-2)(MH-3) 208'-54" CLASS III RCP @ 0.~~0040~~ FT/FT [0.0041]
INV (IN)=~~94.15~~ INV (OUT)=~~93.52~~ [93.12]
[93.98]

(MH-3) 1-ST'D JB-1 REQ'D STA 13+18.50
TOP=~~103.35'~~ H=~~9.91~~ [9.17']
[102.29']

(MH-3)(MH-4) [336'] ~~332'~~-54" CLASS III RCP @ 0.~~0040~~ FT/FT [0.0037]
INV (IN)=~~93.72~~ INV (OUT)=~~91.99~~ [91.87]
[93.12]

(MH-4) 1-ST'D JB-1 REQ'D STA 16+50.00
TOP=~~103.09'~~ H=~~11.10~~ [11.24']
[103.11']

(MH-4)(MH-5) [124'] ~~122'~~-54" CLASS III RCP @ 0.~~0040~~ FT/FT [0.0042]
INV (IN)=~~91.99~~ INV (OUT)=~~91.46~~ [91.35]
[91.87]

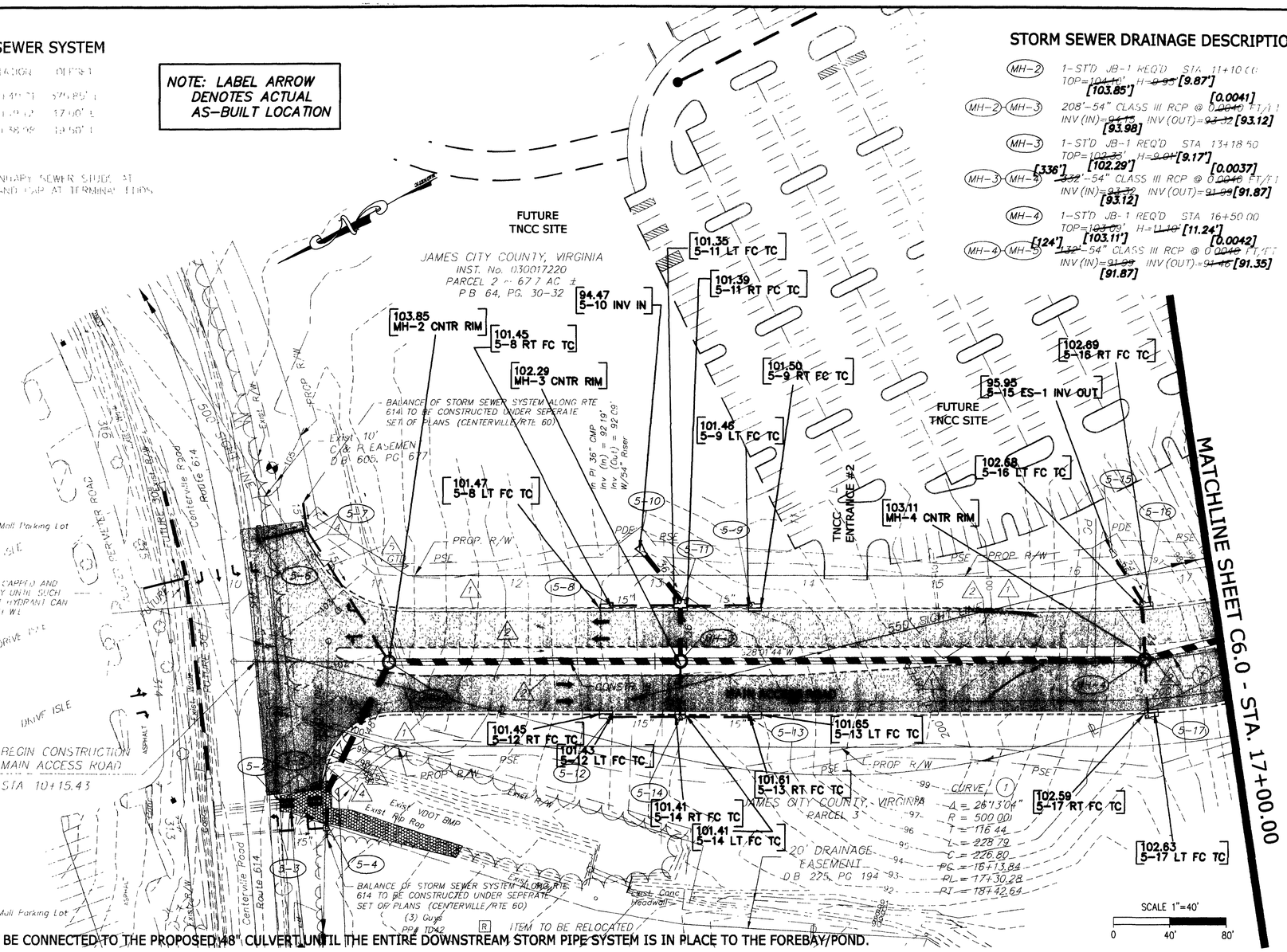

NOTE: DBL. 30" PIPES FROM THE MALL CANNOT BE CONNECTED TO THE PROPOSED 48" CULVERT UNTIL THE ENTIRE DOWNSTREAM STORM PIPE SYSTEM IS IN PLACE TO THE FOREBAY/POND.

(5-2) 1-CONNECTION TO EXISTING DOUBLE 30" RCP REQ'D

(5-2)(5-5) 64'-30" CONCRETE PIPE REQ'D (2.0' COVER) (DOUBLE LINE)
INV.(IN)=98.80 INV.(OUT)=98.30

(5-3) 1-CONNECTION TO EXISTING 15" RCP REQ'D

(5-3)(5-4) 32'-15" CONCRETE PIPE REQ'D (2.0' COVER)
INV.(IN)=98.85 INV.(OUT)=98.53

(5-4) 1-ST'D DI-3A REQ'D (NOSE TYPE A)
H=6.65' INV=96.00
ST'D IS-1 REQ'D

(5-4)(5-5) 12'-24" CONCRETE PIPE REQ'D. (2.0' COVER)
INV.(IN)=96.00 INV.(OUT)=95.90

(5-5) 1-ST'D JB-1 REQ'D (SET BOX BEHIND CURB)
H=7.69' INV=99.19 [TOP=103.20]
ST'D IS-1 REQ'D

(5-5)(MH-2) 100'-48" CONCRETE PIPE REQ'D. (4.9' COVER)
INV.(IN)=95.19 INV.(OUT)=94.65

(5-6) 1-ST'D DI-3B REQ'D (NOSE TYPE A)
H=5.85' L=10' INV.=[illegible]

(5-6)(5-7) 30'-15" CONCRETE PIPE REQ'D. (3.2' COVER)
INV.(IN)=103.00 INV.(OUT)=102.60

(5-7) 1-ST'D DI-3AA REQ'D (NOSE TYPE A)
H=8.78' REQ'D. INV=98.60
16'-15" CONCRETE PIPE FOR STUB REQ'D
INV.(IN)=102.02 INV.(OUT)=101.70

(5-7)(MH-2) 106'-15" CONCRETE PIPE REQ'D (7.2' COVER)
INV.(IN)=98.60 INV.(OUT)=~~96.00~~ [95.90]

(5-8) 1-ST'D DI-3B REQ'D (NOSE TYPE B) [TOP=101.45]
H=~~4.00'~~ L=8' INV=~~97.45~~ [97.41]
[4.04']

(5-8)(5-11) [54'] ~~60'~~-15" CONCRETE PIPE REQ'D (2.9' COVER)
INV.(IN)=~~97.45~~ INV.(OUT)=~~96.99~~
[97.55] [96.93]

(5-9) 1-ST'D DI-3B REQ'D (NOSE TYPE B) [TOP=101.46]
H=~~4.00'~~ L=8' INV=~~97.45~~
[4.47'] [96.99]

(5-9)(5-11) [48'] ~~60'~~-15" CONCRETE PIPE REQ'D (2.9' COVER)
INV.(IN)=~~97.45~~ INV.(OUT)=~~96.99~~
[97.45] [96.95]

(5-10) 1-ST'D DI-3C REQ'D (NOSE TYPE B)
INV=~~94.95~~ [95.10]

(5-10)(5-11) [51'] ~~60'~~-15" CONCRETE PIPE REQ'D (3.7' COVER)
INV.(IN)=~~94.95~~ INV.(OUT)=~~94.49~~ [93.80]
[94.47]

(5-11) 1-ST'D DI-4C REQ'D (NOSE TYPE B) [TOP=101.37]
[7.36'] H=~~7.90'~~ L=8' INV=~~93.74~~ [94.01]
1-ST'D IS-1 REQ'D

(5-11)(MH-3) [40'] ~~42'~~-36" CONCRETE PIPE REQ'D (3.8' COVER)
INV.(IN)=~~93.74~~ INV.(OUT)=~~93.42~~ [93.41]
[94.01]

(5-12) 1-ST'D DI-3B REQ'D (NOSE TYPE B) [TOP=101.43]
[4.02'] H=~~4.14'~~ L=8' INV.=~~97.45~~ [97.41]

(5-12)(5-14) [51'] ~~60'~~-15" CONCRETE PIPE REQ'D. (2.9' COVER)
INV.(IN)=~~97.45~~ INV.(OUT)=~~96.99~~ [96.89]
[97.41]

(5-13) 1-ST'D DI-3B REQ'D (NOSE TYPE B) [TOP=101.61]
[4.15'] H=~~4.14'~~ L=8' INV=~~97.45~~ [97.46]

(5-13)(5-14) [51'] ~~60'~~-15" CONCRETE PIPE REQ'D. (2.9' COVER)
INV.(IN)=~~97.45~~ INV.(OUT)=~~96.99~~ [96.89]
[97.39]

(5-14) 1-ST'D DI-3C REQ'D (NOSE TYPE B) [TOP=101.41]
[4.62'] H=~~4.59'~~ L=6' INV=~~96.89~~ [96.79]
ST'D IS-1 REQ'D

(5-14)(MH-3) [37'] ~~42'~~-15" CONCRETE PIPE REQ'D (3.7' COVER)
INV.(IN)=~~96.89~~ INV.(OUT)=96.57
[96.79]

(5-15) 1-ST'D ES-1 REQ'D
INV=~~95.95~~ [95.95]

(5-15)(5-16) [47'] ~~42'~~-24" CONCRETE PIPE REQ'D (3.0' COVER)
INV.(IN)=~~95.95~~ INV.(OUT)=~~93.47~~ [93.33]
[95.95]

(5-16) 1-ST'D DI-3BB REQ'D (NOSE TYPE B) [TOP=102.69]
[9.36'] H=~~9.46'~~ L=6' INV=~~93.82~~ [93.33]
ST'D IS-1 REQ'D

(5-16)(MH-4) [40'] ~~42'~~-24" CONCRETE PIPE REQ'D (3.8' COVER)
INV.(IN)=~~93.47~~ INV.(OUT)=~~93.00~~ [91.87]
[93.38]

(5-17) 1-ST'D DI-3B REQ'D (NOSE TYPE B) [TOP=102.63]
[4.00'] H=~~4.06'~~ L=6' INV.=~~98.60~~ [98.63]

(5-17)(MH-4) [40'] ~~42'~~-15" CONCRETE PIPE REQ'D (3.2' COVER)
INV.(IN)=~~98.60~~ INV.(OUT)=~~98.14~~ [95.90]
[98.63]

SHEET REFERENCE

TYPICAL SECTIONS	C2.0
MAIN ACCESS PROFILE	C3.1
ENTRANCE PROFILE	C3.2
PAVEMENT MARKING	C2.3

✱ STRUCTURE 5-6 WILL COME INTO SERVICE WHEN CENTERVILLE ROAD WIDENING (RTE 614) IS COMPLETED.

STORMWATER RECORD DRAWINGS-4/10/06

TIMMONS GROUP

YOUR VISION ACHIEVED THROUGH OURS.

THIS DRAWING PREPARED AT THE CORPORATE OFFICE
1001 Boulders Parkway, Suite 300 | Richmond, VA 23225
TEL 804.200.0500 FAX 804.560.1016 www.timmons.com

Site Development | Residential | Infrastructure | Technology

COMMONWEALTH OF VIRGINIA
ANDREW P. GOULD
NO. 030301
PROFESSIONAL ENGINEER
10-13-06

DATE	REVISION DESCRIPTION
7/11/05	ADDRESSED COMMENTS
4/10/06	AS BUILT
10/12/06	ADDRESSED AS BUILT COMMENTS

DATE	06/07/05
DRAWN BY	MRF
DESIGNED BY	MRF
CHECKED BY	CMK
SCALE	1"=40'

WARHILL SITE ROADWAYS AND IMPROVEMENTS

JAMES CITY COUNTY, VIRGINIA

PLAN SHEET

JOB NO. 22303

SHEET NO. C5.0

These plans and associated documents are the exclusive property of TIMMONS GROUP and may not be reproduced in whole or in part and shall not be used for any purpose whatsoever, inclusive, but not limited to construction, bidding, and/or construction staking without the express written consent of TIMMONS GROUP.

O:\22303\dwg\as-builts\22303C-5-6-7-8-ASBLT.dwg, 10/12/2006 11:50:57 AM, Xerox.pc3

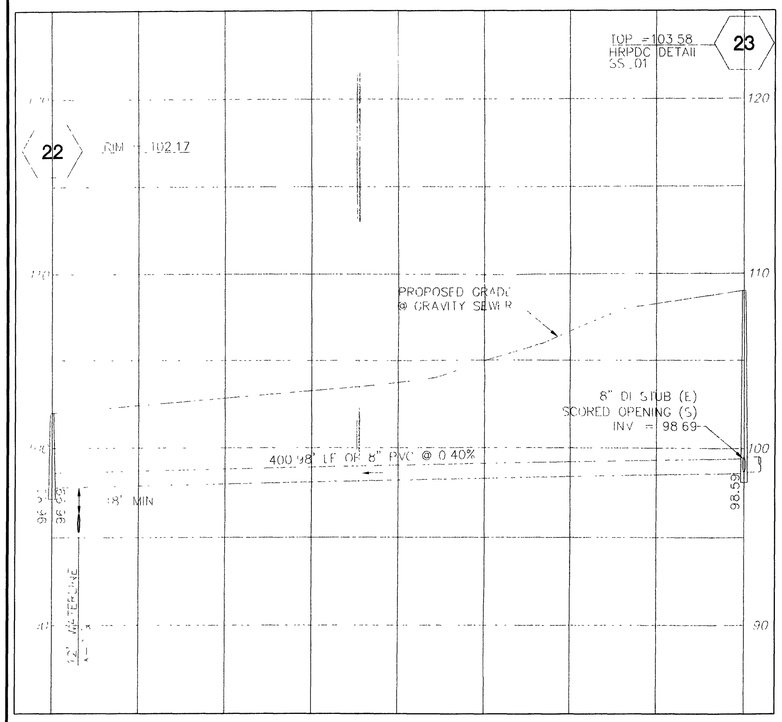

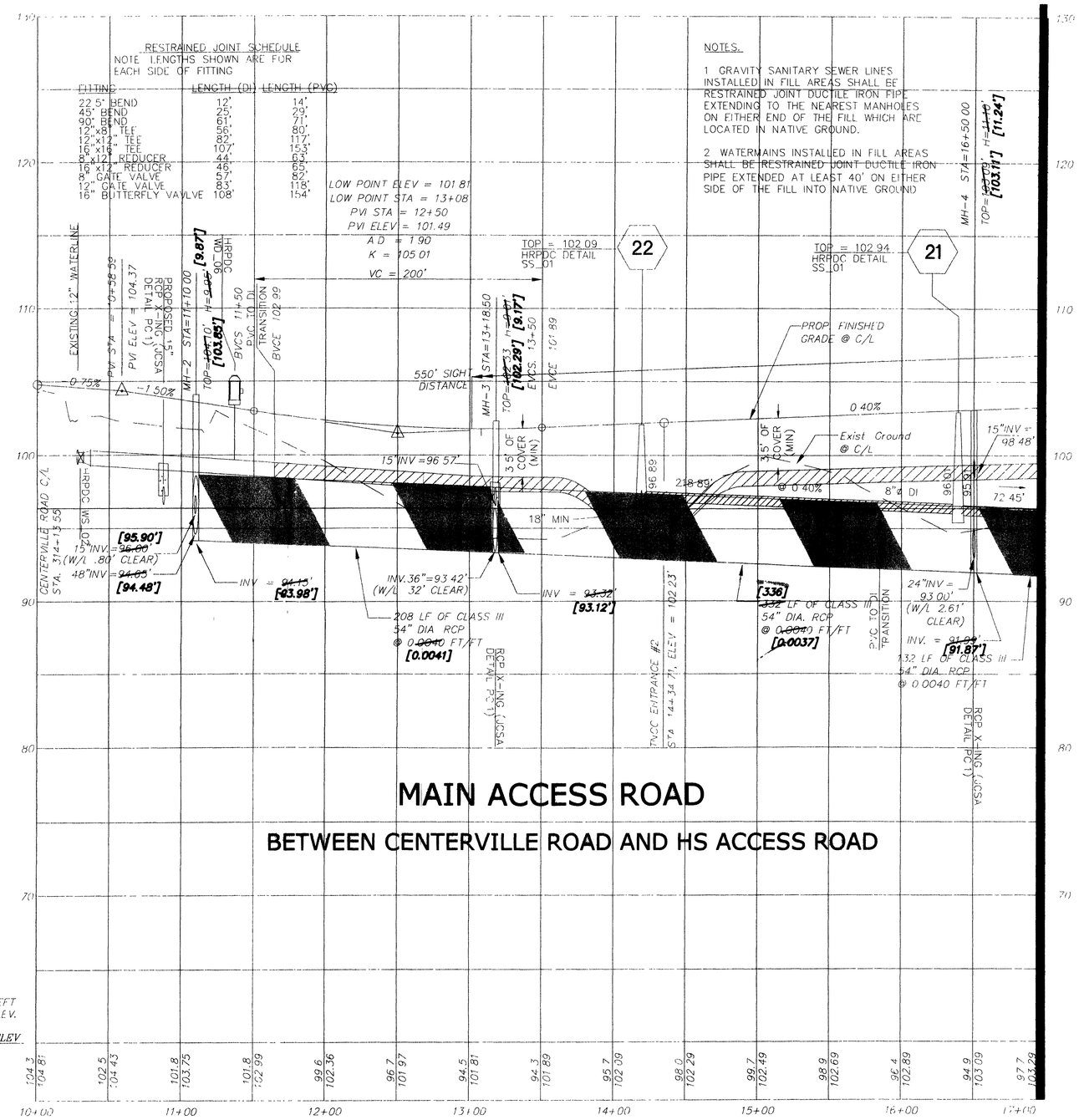

NOTE

THE 12" WATERLINE HAS 3.5' OF COVER AT THE FINISHED GRADE CENTERLINE WHICH EQUALS 3.0' OF COVER AT THE CENTERLINE OF THE 12" WATERLINE

4
0
0 40

MATCHLINE SHEET C6.1 - STA. 17+00.00

STORMWATER RECORD DRAWINGS-4/10/06

COMMONWEALTH OF VIRGINIA
ANDREW P. GOBLE
No. 090591
10-12-06
PROFESSIONAL ENGINEER

THIS DRAWING PREPARED AT THE CORPORATE OFFICE
1001 Boulders Parkway, Suite 300 | Richmond, VA 23225
TEL 804.200.6500 FAX 804.560.1016 www.timmons.com

YOUR VISION ACHIEVED THROUGH OURS.

Site Development | Residential | Infrastructure | Technology

DATE	REVISION DESCRIPTION
7/11/05	ADDRESSED COMMENTS
4/10/06	AS BUILT
10/12/06	ADDRESSED AS BUILT COMMENTS

DATE 06/07/05
DRAWN BY MRF
DESIGNED BY MRF
CHECKED BY CMK
SCALE (H) 1"=40' (V) 1"=4'

TIMMONS GROUP

WARHILL SITE ROADWAYS AND IMPROVEMENTS
JAMES CITY COUNTY, VIRGINIA
PROFILE SHEET

JOB NO 22303
SHEET NO C5.1

These plans and associated documents are the exclusive property of TIMMONS GROUP and may not be reproduced in whole or in part and shall not be used for any purpose whatsoever, inclusive, but not limited to construction, bidding, and/or construction staking without the express written consent of TIMMONS GROUP.

O:\22303\dwg\as-builts\22303C-51-61-71-81-ASBLT.dwg, 10/12/2006 12:01:22 PM, Xerox.pc3

O:\22303\dwg\as-builts\22303CDRPL5.2-4-ASBLT.dwg, 10/13/2006 12:39:11 PM, Xerox.pc3

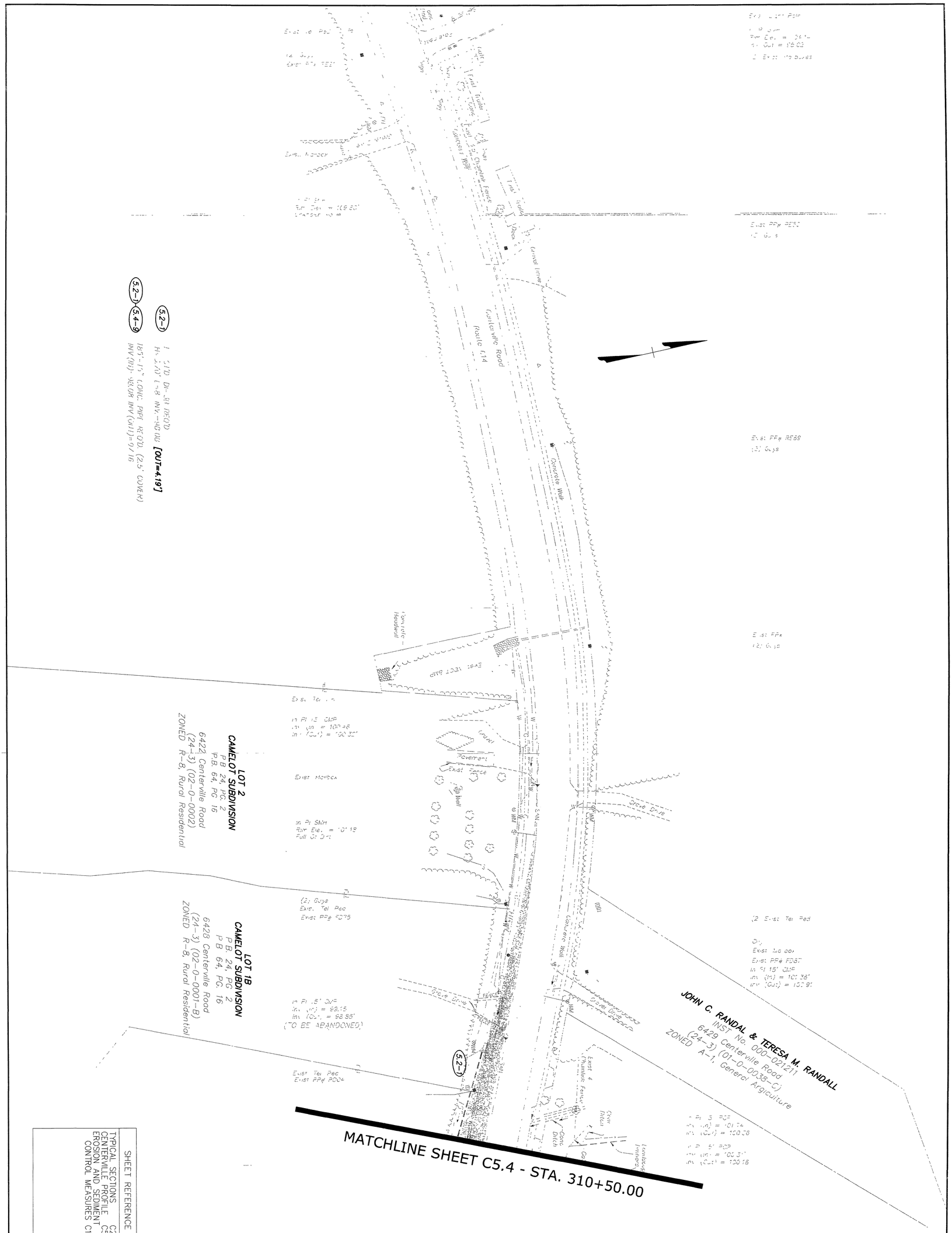

SHEET REFERENCE	
TYPICAL SECTIONS CENTERVILLE PROFILE EROSION AND SEDIMENT CONTROL MEASURES	C2.1 C2.3 C1.6

STORMWATER RECORD DRAWINGS-4/10/06

TIMMONS GROUP

YOUR VISION ACHIEVED THROUGH OURS

THIS DRAWING PREPARED AT THE **CORPORATE OFFICE**
1001 Boulders Parkway, Suite 300 | Richmond, VA 23225
TEL 804 200.6500 FAX 804.560 1016 www.timmons.com

Site Development | Residential | Infrastructure | Technology

REVISION DESCRIPTION	DATE
ALL SHEETS	8/1/05
PER COUNTY AND VDOT COMMENTS	9/20/05
ADDRESSED AS BUILT COMMENTS	10/12/06

SHEET NO	JOB NO	SCALE	CHK	DESIGNED BY	DRAWN BY	DATE
C5.2	22303	1"=40'	CMK	MRF	MRF	06/13/05

WARHILL SITE ROADWAYS AND IMPROVEMENTS : CENTERVILE RD./RTE. 60
JAMES CITY COUNTY, VIRGINIA
PLAN SHEET

These plans and associated documents are the exclusive property of TIMMONS GROUP and may not be reproduced in whole or in part and shall not be used for any purpose whatsoever, inclusive, but not limited to construction, bidding, and/or construction staking without the express written consent of TIMMONS GROUP

(5.4-1) 1- ST'D. 30" ES-1 REQ'D.
INV.=103.40

(5.4-1)(5.4-3) 61'-30" CONC. PIPE REQ'D. (0.6' COVER)
INV.(IN)=103.40 INV.(OUT)=102.00

(5.4-2) 1- ST'D. DI-3B REQ'D.
H=4.50' L=12' INV.=103.00

(5.4-2)(5.4-3) 36'-18" CONC. PIPE REQ'D. (2.6' COVER)
INV.(IN)=103.00 INV.(OUT)=102.50

(5.4-3) 1- ST'D. DI-3A REQ'D.
H=3.43' INV.=101.90

* * * * TOP OF 8" GAS=105.90 (PROP. 15"RCP CLEARS BY .2')
TOP OF 12" WATER=103.23 (PROP. 15"RCP CLEARS BY 2.9')
TOP OF 2" BLACK CABLE=106.09 (PROP. 15"RCP RESTS ON CABLE)

(5.4-3)(5.4-4) 135'-30" CONC. PIPE REQ'D. (0.7' COVER)
INV.(IN)=101.90 INV.(OUT)=99.40

(5.4-4) 1- ST'D. 30" ES-1 REQ'D.
INV.=99.40

(5.4-5) 1- ST'D. DI-3B REQ'D. * *
H=2.84' L=8' INV.=112.50 **[OUT=3.30]**

(5.4-5)(5.4-6) 30'-15" CONC. PIPE REQ'D. (2.5' COVER)
INV.(IN)=112.00 INV.(OUT)=111.70
(TOP OF 8" GAS AND 12"W/L= 110.39)

(5.4-6) 1- ST'D. DI-3A REQ'D. **[IN=4.55] [OUT=4.60]**
H=4.41' INV.=111.60 **[IN=4.30@XING]**

* SEE ACCESS ROAD PLANS
FOR DESCRIPTIONS.

* * TEST HOLE INDICATES 8" F.M. UNDER
INLET 5.4-5 (TOP OF F. M. PIPE
=111.83) BOTTOM INLET = 111.83

* * * TEST HOLE INDICATES 8" F.M. BRUSHES
BESIDE INLET 5.4-7 (TOP OF F. M. PIPE
=106.78) (BOTTOM INLET = 105.83)

(5.4-6)(5.4-8) 216'-15" CONC. PIPE REQ'D. (3.1' COVER)
INV.(IN)=111.60 INV.(OUT)=106.20- R=813.78'

(5.4-7) 1- ST'D. DI-3B REQ'D. * * * **[FACE OF CURB**
H=3.31' L=8' INV.=106.500 **ELEV.=110.15 C. OF BOX**
BACK OF BOX 4" HIGHER 17.08 FROM
FRONT .68"/3.80 BACK]

(5.4-7)(5.4-8) 30'-15" CONC. PIPE REQ'D. (2.6' COVER) * * * *
(722' RADIUS WITH JOINT - USING 8' PIPE JOINT LENGTHS)
INV.(IN)=106.50 INV.(OUT)=106.20
JOINTS ARE TO BE OPENED A MAXIMUM OF 25% OF THE
SPIGOT OR TONGUE LENGTH.

(5.4-8) 1- ST'D. DI-3A REQ'D. **[IN=4.75] [OUT=4.93]**
H=4.60' INV.=106.10 **[OUT=4.60@XING]**

(5.4-8)(5.4-7) 216'-15" CONC. PIPE REQ'D. (4.7' COVER)
(814' RADIUS WITH OPEN JOINT - USING 8' PIPE JOINT LENGTH)
[105.84] INV.(IN)=~~106.10~~ INV.(OUT)=~~101.60~~ - R=721.79'
JOINTS ARE TO BE OPENED A MAXIMUM OF 25% OF THE
SPIGOT OR TONGUE LENGTH. **[101.55]**

(5.4-9)(5.4-5) 1- ST'D. DI-3B REQ'D. **[IN=4.40] [OUT=4.47]**
H=5.22' L=8' INV.=97.06 **[ELEV.=101.59**
ST'D. IS-1 REQ'D. **FACE OF CURB]**

138'-15" CONC. PIPE REQ'D. (3.8' COVER)
INV.(IN)=97.06 INV.(OUT)=96.37

(5-5) **[INV.(IN)=6.28] [INV.(OUT)=6.45]**
[IN=4.15@XING]

(5-6) **[INV.(OUT)=3.95]**

(5-7) **[INV.(IN)=6.39] [INV.(OUT)=8.98]**
[IN=4.89@XING]

6401 RICHMOND ROAD, LLLP
INST. No. 030-024765
6401 Richmond Road
(24-3) (01-0-0038)
ZONED: M-1, Limited

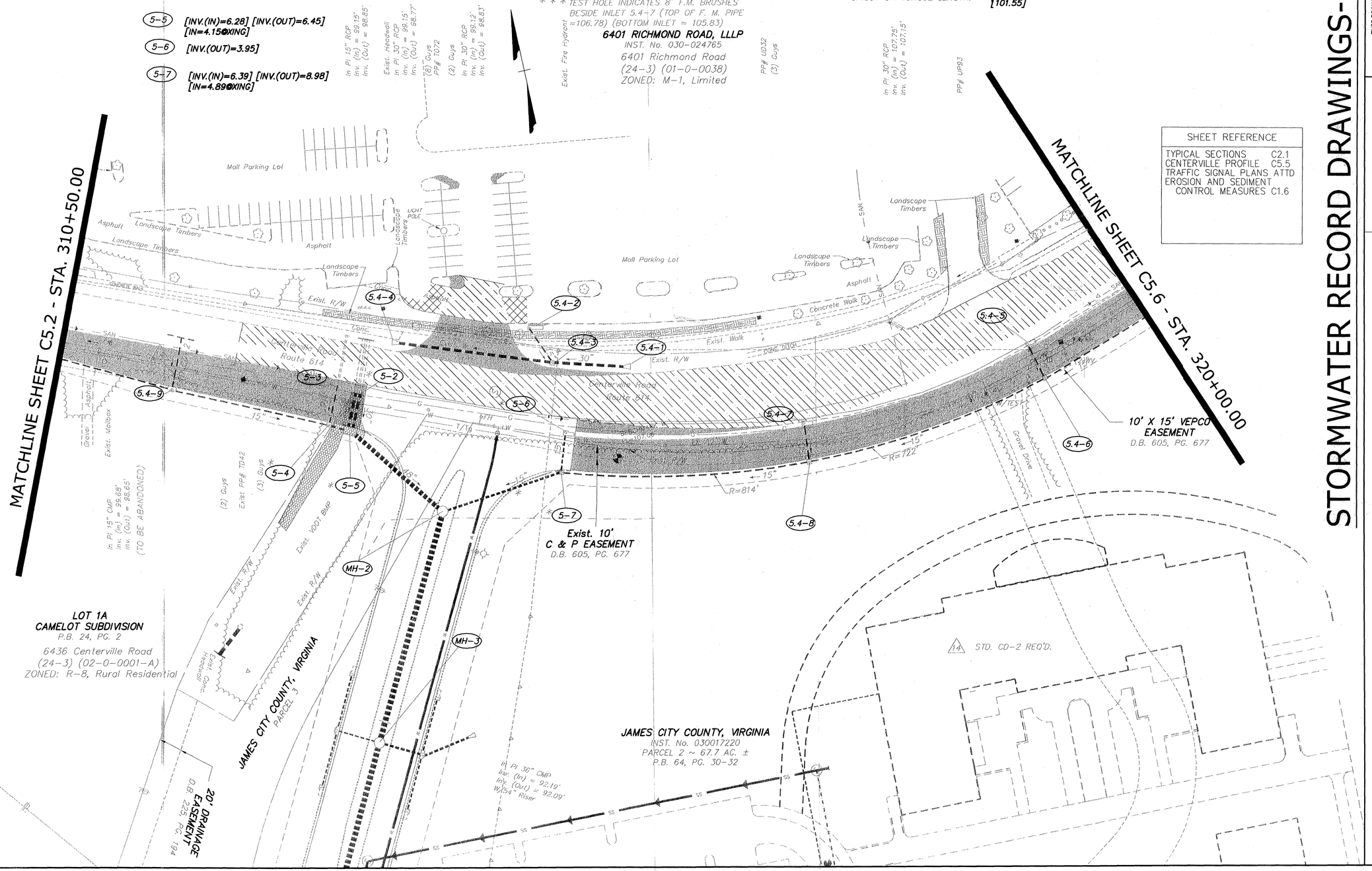

SHEET REFERENCE	
TYPICAL SECTIONS	C2.1
CENTERVILLE PROFILE	C5.5
TRAFFIC SIGNAL PLANS ATTD	
EROSION AND SEDIMENT CONTROL MEASURES	C1.6

RECORD DRAWINGS-4/10/06

STORMWATER

COMMONWEALTH OF VIRGINIA
JAMES W. GOULD
No. 0885
PROFESSIONAL ENGINEER
10/13/06

THIS DRAWING PREPARED AT THE
CORPORATE OFFICE
1001 Boulders Parkway, Suite 300 | Richmond, VA 23225
TEL 804.200.6500 FAX 804.560.1016 www.timmons.com

YOUR VISION ACHIEVED THROUGH OURS.

Site Development | Residential | Infrastructure | Technology

DATE	REVISION DESCRIPTION
8/1/05	ALL SHEETS
9/20/05	PER COUNTY AND VDOT COMMENTS
10/12/06	ADDRESSED AS BUILT COMMENTS

DATE	06/13/05
DRAWN BY	MRF
DESIGNED BY	MRF
CHECKED BY	CMK
SCALE	1"=40'

TIMMONS GROUP

WARHILL SITE ROADWAYS AND IMPROVEMENTS : CENTERVILLE RD./RTE. 60
JAMES CITY COUNTY, VIRGINIA
PLAN SHEET

JOB NO. 22303
SHEET NO. C5.4

These plans and associated documents are the exclusive property of TIMMONS GROUP and may not be reproduced in whole or in part and shall not be used for any purpose whatsoever, inclusive, but not limited to construction, bidding, and/or construction staking without the express written consent of TIMMONS GROUP.

O:\22303\dwg\as-builts\22303CDRPL5.2-4-ASBLT.dwg, 10/13/2006 12:39:39 PM, Xerox.pc3

R E S O L U T I O N

GRANT AWARD – DAM SAFETY ASSISTANCE FUND FOR THE

WARHILL WESTERN POND DAM - $6,200

WHEREAS, the Virginia Department of Conservation and Recreation and the Virginia Resources Authority, as administrator of the Dam Safety, Flood Prevention and Protection Assistance Fund, has awarded James City County a grant to improve dam safety; and

WHEREAS, funds are needed for the Warhill Western Pond Dam to develop a dam break inundation map as required for renewal of a regular six-year Operational and Maintenance Certificate in accordance with Virginia Dam Safety Act and Impounding Structure Regulation requirements; and

WHEREAS, the award is in the amount of $6,200 ($6,300 local match required); and

WHEREAS, the matching funds of $6,300 are available in the County's Grant Match Account.

NOW, THEREFORE, BE IT RESOLVED that the Board of Supervisors of James City County, Virginia, hereby accepts the $6,200 grant awarded by the Virginia Department of Conservation and Recreation and the Virginia Resources Authority for the Warhill Western Pond Dam and authorizes the County Administrator to execute the grant agreement.

BE IT FURTHER RESOLVED that the Board of Supervisors of James City County, Virginia, hereby authorizes the following appropriation to the Special Projects/Grants Fund.

Revenues:

Dam Safety Assistance Fund	$ 6,200
County's Grant Match Account	$ 6,300
Total:	$12,500

Expenditure:

Warhill Western Pond Dam	$12,500

_____
John J. McGlennon
Chairman, Board of Supervisors

ATTEST:

_____
Robert C. Middaugh

	VOTES		
	AYE	NAY	ABSTAIN
MCGLENNON	____	____	____
JONES	____	____	____
KENNEDY	____	____	____
ICENHOUR	____	____	____
KALE	____	____	____

Clerk to the Board

Adopted by the Board of Supervisors of James City County, Virginia, this 27th day of November, 2012.

WestPondDamBOS_res

AGENDA ITEM NO. _____

M E M O R A N D U M

DATE: November 27, 2012

TO: The Board of Supervisors

FROM: Scott J. Thomas, Director of Engineering and Resource Protection

SUBJECT: Grant Award – Dam Safety Assistance Fund for the Warhill Western Pond Dam - $6,200

The Virginia Resources Authority, as administrator of the Dam Safety, Flood Prevention and Protection Assistance Fund for the Virginia Department of Conservation and Recreation, has awarded James City County a $6,200 grant for dam break inundation zone analysis, mapping and digitization, known as a dam break inundation map, for the Warhill Sports Complex Western Pond Dam, state inventory # 09528. Grants from the fund require a minimum 50 percent match by the recipient and funds are dispersed and reimbursed after completion of work. The County does not have the tools or resources to perform dam break inundation mapping; therefore, it intends to contract with a qualified consultant from the County's Annual Service Contract list to develop deliverables as required by the terms of the grant agreement and to meet the provisions of Virginia Dam Safety Act and Impounding Structure Regulations. The estimated cost of the project is $12,500 with County match required at $6,300. This amount is available in the County's Grant Match Account with appropriation to the the Special Projects/Grant Fund.

The Warhill Western Pond Dam is situated in the woods west of the Warhill Trail entrance road behind the basketball courts and the former soil stockpile/storm debris staging area. The Western Pond Dam is a recreational amenity and part of Warhill District Park master plan. The dam/lake was upgraded to serve as a regional BMP as part of the Warhill Public-Private Education and Facilities Act (PPEA) project by the County in 2005-2006. The BMP serves a drainage area of 200 acres and provides water quality and stream channel protection volume control for most of the drainage area associated with the Williamsburg Outlet Mall, Warhill High School, Law Enforcement Center, Sanford B. Wanner community sports stadium, Thomas Nelson Community College, Opportunity Way, stadium access road, and the six synthetic turf athletic fields. The Western Pond dam controls large storm events and outlets into the natural water storage area of the former Warhill Trail Dam (Warhill Trail road) which was recently decommissioned.

The County currently owns and operates the Western Pond Dam. The County brought the dam into compliance with state dam safety standards in 2005 by obtaining an alterations permit and a conditional (temporary) Operation and Maintenance (O&M) certificate in 2005. In 2006 a regular, six-year O&M certificate was then secured. At that time, the state assigned a Class III hazard classification to the impounding structure and a dam break inundation map was not required. The current O&M certificate expired July 31, 2012. The County made submission for renewal of the six year certificate in June 2012. However, because of dam safety law and regulation changes in 2008, dams are now classified in a different manner and a comprehensive dam break inundation map submittal is required. To remain in compliance during this interim period, the County has secured a conditional (temporary) Operational and Maintenance Certificate for the Western Pond Dam which is good until July 31, 2013.

Recommendation:

Accepting the grant will save the County $6,200 of the cost required to remain compliant with state dam safety regulations. Staff recommends approval of the attached resolution to accept the $6,200 grant, execute the grant agreement, and appropriate the funds as described.

Scott J. Thomas

CONCUR:

Allen J. Murphy

___/___
WestPondDam_memo.pre

Attachment

MEMORANDUM COVER

Subject: Grant Award – Dam Safety Assistance Fund for the Warhill Western Pond Dam - $6,200

Action Requested: Shall the Board approve the attached resolution to accept the $6,200 grant for the Warhill Sport Complex Western Pond Dam?

Summary: The Virginia Department of Conservation and Recreation has awarded a Dam Safety, Flood Prevention and Protection Assistance Fund grant to James City County in the amount of $6,200 for the development of a dam break inundation zone map required for the County owned and operated Western Pond Dam at the Warhill Sports Complex. The dam break map is required to renew the regular six-year Operation and Maintenance certificate to comply with state dam safety regulations. The project has an estimated cost of $12,500. The terms of the grant agreement require a County match of $6,300.

Staff recommends adoption of the attached resolution.

Fiscal Impact: The County will save $6,200 of the cost required to remain compliant with state dam safety regulations.

FMS Approval, if Applicable: Yes ☐ No ☐

Assistant County Administrator

Doug Powell _____

County Administrator

Robert C. Middaugh _____

Attachments:
1. Memorandum
2. Resolution

Agenda Item No.: _____

Date: November 27, 2012

WestPondDamMemoCover_cvr.doc