Stormwater Division

MEMORANDUM

DATE: March 4, 2010

TO: Michael J. Gillis, Virginia Correctional Enterprises Document Management Services

FROM: Jo Anna Ripley, Stormwater

PO: 270712

RE: Files Approved for Scanning

General File ID or BMP ID: PC171

PIN: 3220100057

Subdivision, Tract, Business or Owner Name (if known): Villages at Westminster (The)

Property Description: Common Area

Site Address: 6235 Richmond Road

(For internal use only)	**Box** 5		**Drawer:** 3		
Agreements: (in file as of scan date)	**Y**	**Book or Doc#:**	0820	**Page:**	913
			809		636

Comments

Date Record Created:

Created By:

WS_BMPNO: PC171

PRINTED ON
Thursday, March 04, 2010
4:57:47 PM

WATERSHED	PC
BMP ID NO	171
PLAN NO	SP-100-97
TAX PARCEL	(32-2)(1-57)
PIN NO	3220100057
CONSTRUCTION DATE	1/1/1998
PROJECT NAME	Villages at Westminster Pond II
FACILITY LOCATION	End of Cotswald
CITY-STATE	Williamsburg, Va. 23188
CURRENT OWNER	Warhill Associates LLC
OWNER ADDRESS	10 San Jose Drive
OWNER ADDRESS 2	Suite 4C
CITY-STATE-ZIP CODE	Newport News, Va. 23606
OWNER PHONE	
MAINT AGREEMENT	Yes
EMERG ACTION PLAN	No

Get Last BMP No | Return to Menu | Print Record

MAINTENANCE PLAN	No	CTRL STRUC DESC	RCP Riser
SITE AREA acre		CTRL STRUC SIZE inches	54
LAND USE	General Residential	OTLT BARRL DESC	RCP barrel
old BMP TYP	Wet Pond	OTLT BARRL SIZE inch	36
JCC BMP CODE	A2 Wet Pond		
POINT VALUE	9	EMERG SPILLWAY	Yes
		DESIGN HW ELEV	56.99
		PERM POOL ELEV	50
SVC DRAIN AREA acres	56.4	2-YR OUTFLOW cfs	17.90
		10-YR OUTFLOW cfs	0.00
		REC DRAWING	Yes
SERVICE AREA DESCRI	SF Lots & Roads Sec 2, 3 & 4		
IMPERV AREA acres	10.35	CONSTR CERTIF	No
RECV STREAM	UT of Powhatan Creek		
EXT DET-WQ-CTRL	Yes	LAST INSP DATE	5/14/2002
WTR QUAL VOL acre-ft	1.77	Inspected by:	
CHAN PROT CTRL	No	INTERNAL RATING	3
CHAN PROT VOL acre-ft	0	MISC/COMMENTS	
SW/FLOOD CONTROL	Yes	Ph 5, Sec 2 Cotswald. Beyond end of cul-de-sac Lot 359. Also see PC 170.	
GEOTECH REPORT	Yes		

Additional Comments:

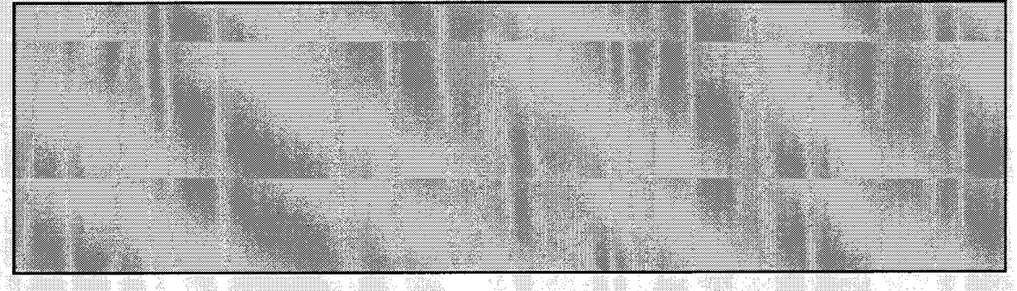

018180

DECLARATION OF COVENANTS

INSPECTION/MAINTENANCE OF RUNOFF CONTROL FACILITY

THIS DECLARATION, made this 10th day of December, 1996, between Warhill Associates L.L.C., and all successors in interest, hereinafter referred to as the "COVENANTOR(S)," owner(s) of the following property: The Villages at Westminster Phase I Sec. I B&R, Deed Book 809, Page No. 636, and James City County, Virginia, hereinafter referred to as the "COUNTY."

WITNESSETH:

We, the COVENANTOR(S), with full authority to execute deeds, mortgages, other covenants, and all rights, titles and interests in the property described above, do hereby covenant with the COUNTY as follows:

1. The COVENANTOR(S) shall provide maintenance for the runoff control facility, hereinafter referred to as the "FACILITY," located on and serving the above-described property to ensure that the FACILITY is and remains in proper working condition in accordance with approved design standards, and with the law and applicable executive regulations.

2. If necessary, the COVENANTOR(S) shall levy regular or special assessments against all present or subsequent owners of property served by the FACILITY to ensure that the FACILITY is properly maintained.

3. The COVENANTOR(S) shall provide and maintain perpetual access from public rights-of-way to the FACILITY for the COUNTY, its agent and its contractor.

4. The COVENANTOR(S) shall grant the COUNTY, its agent and its contractor a right of entry to the FACILITY for the purpose of inspecting, operating, installing, constructing, reconstructing, maintaining or repairing the FACILITY.

5. If, after reasonable notice by the COUNTY, the COVENANTOR(S) shall fail to maintain the FACILITY in accordance with the approved design standards and with the law and applicable executive regulations, the COUNTY may perform all necessary repair or maintenance work, and the COUNTY may assess the COVENANTOR(S) and/or all owners of property served by the FACILITY for the cost of the work and any applicable penalties.

6. The COVENANTOR(S) shall indemnify and save the COUNTY harmless from any and all claims for damages to persons or property arising from the installation, construction, maintenance, repair, operation or use of the FACILITY.

7. The COVENANTOR(s) shall promptly notify the COUNTY when the COVENANTOR(S) legally transfers any of the COVENANTOR(S)' responsibilities for the FACILITY. The COVENANTOR(S)' shall supply the COUNTY with a copy of any document of transfer, executed by both parties.

8. The covenants contained herein shall run with the land and shall bind the COVENANTOR(S) and the COVENANTOR(S)' heirs, executors, administrators, successors and assignees, and shall bind all present and subsequent owners of property served by the FACILITY.

9. This COVENANT shall be recorded in the County Land Records.

DEC. -09' 96(MON) 15:46 JCC/JCSA TEL:804-253-6850 P.002

IN WITNESS WHEREOF, the COVENANTOR(S) have executed this DECLARATION OF COVENANTS as of this 10th day of December 1996.

COVENANTOR(S)

Warhill Associates, L.L.C.

Kenneth L. Allen, President

ATTEST:

Frances C Barker

Secretary

COVENANTOR(S)

ATTEST:

COMMONWEALTH OF VIRGINIA

~~COUNTY~~ CITY OF Hampton

I hereby certify that on this 10th day of December 1996, before the subscribed, a Notary Public of the State of Virginia, and for the ~~County~~ City of Hampton, aforesaid personally appeared Kenneth L. Allen and did acknowledge the aforegoing instrument to be their Act.

IN WITNESS WHEREOF, I have hereunto set my hand and official seal this 10th day of December 1996.

Frances C Barker

Notary Public

My Commission expires: Nov. 30-1998

Approved as to form:

Lois P. Rogers

This Declaration of Covenants prepared by:

Steven F. Kelly
(Print Name)

Director of Development
(Title)

2 Eaton Street, Suite 1101
(Address)

Hampton, Virginia 23669
(City) (State) (Zip)

0261U.wpf
Revised 9/96

VIRGINIA: City of Williamsburg and County of James City, to Wit:
In the Clerk's Office of the Circuit Court of the City of Williamsburg and County of James City, the 20 day of Dec. 1996. This Deed of Covenants was presented with certificate annexed and admitted to record at 9:17 o'clock
Teste: Helene S. Ward, Clerk
by Helene S Ward
~~Deputy~~ Clerk

DEC. -09' 96(MON) 15:47 JCC/JCSA TEL:804-253-6850 P.003

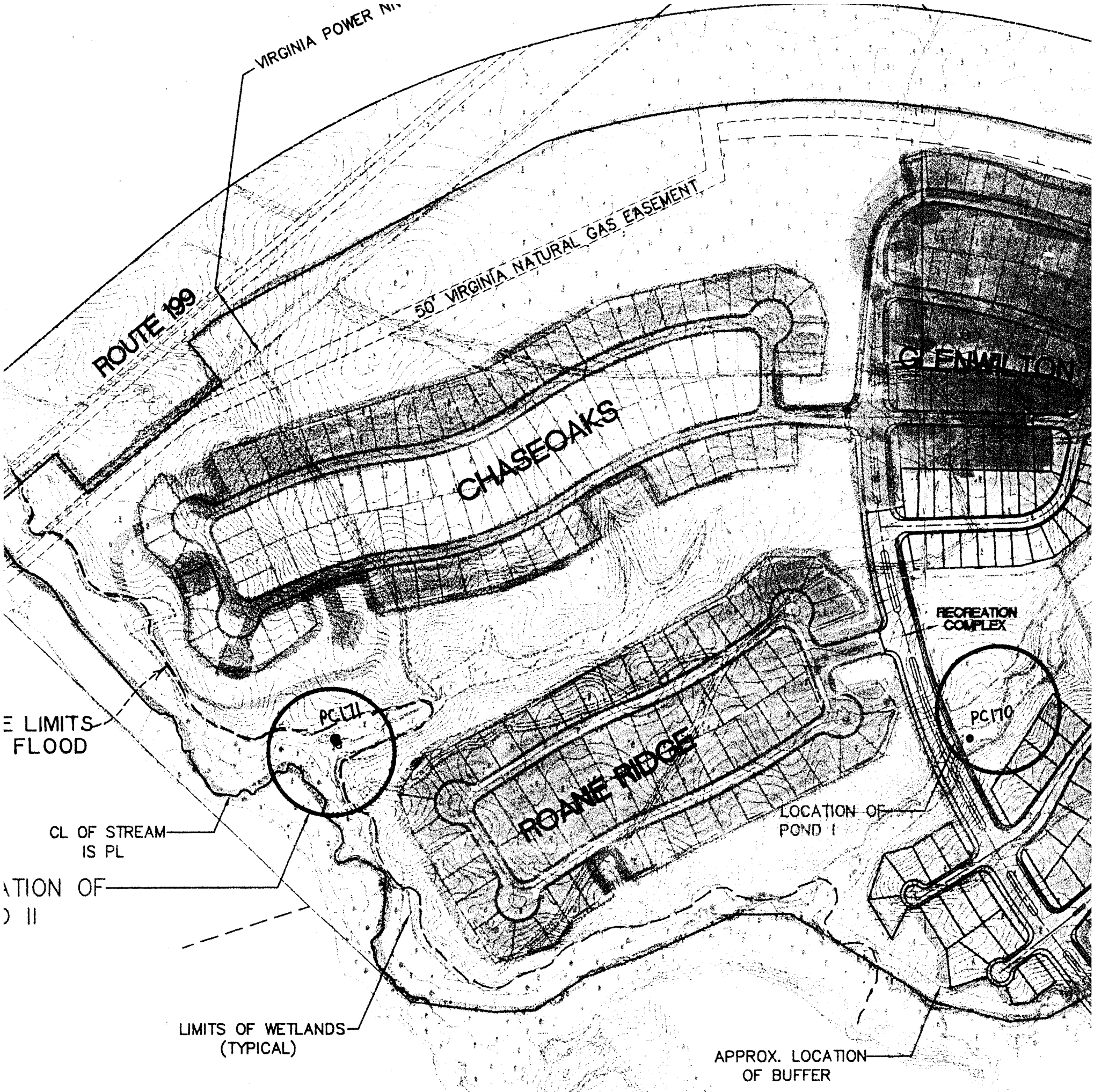

PLAN

SCALE: 1" = 300'

300 0 300 900

Scale 1" = 300 ft

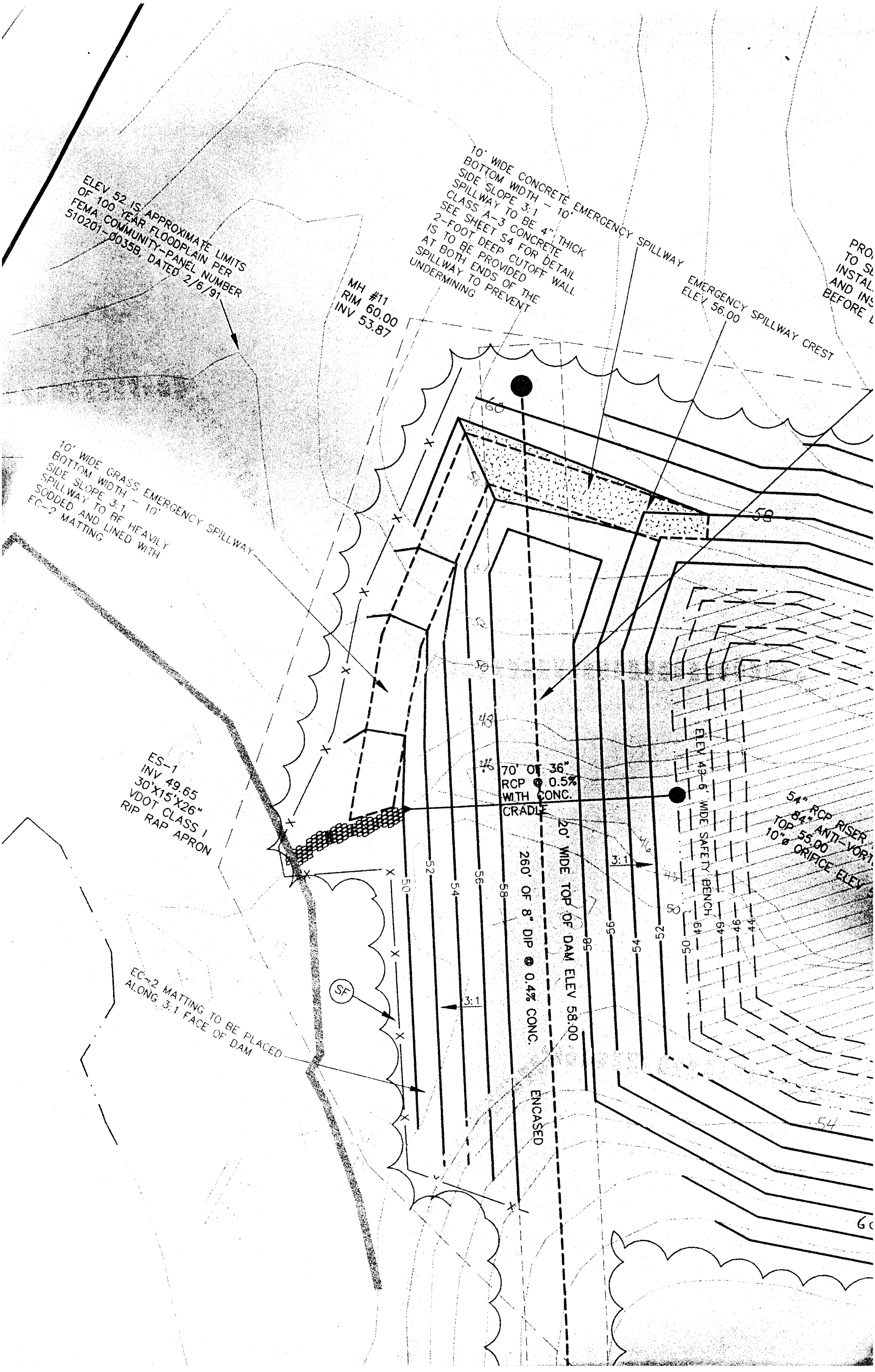

ELEV 52 IS APPROXIMATE LIMITS OF 100 YEAR FLOODPLAIN PER FEMA COMMUNITY-PANEL NUMBER 510201-0035B, DATED 2/6/91
10' WIDE CONCRETE EMERGENCY SPILLWAY BOTTOM WIDTH - 10' SIDE SLOPE 3:1 SPILLWAY TO BE 4" THICK CLASS A-3 CONCRETE SEE SHEET S4 FOR DETAIL 2-FOOT DEEP CUTOFF WALL IS TO BE PROVIDED AT BOTH ENDS OF THE SPILLWAY TO PREVENT UNDERMINING
MH #11 RIM 60.00 INV 53.87
EMERGENCY SPILLWAY CREST ELEV 56.00
10' WIDE GRASS EMERGENCY SPILLWAY BOTTOM WIDTH - 10' SIDE SLOPE 3:1 SPILLWAY TO BE HEAVILY SODDED AND LINED WITH EC-2 MATTING
ES-1 INV 49.65 30'X15'X26" VDOT CLASS I RIP RAP APRON
70' OF 36" RCP @ 0.5% WITH CONC. CRADLE
ELEV 49-6' WIDE SAFETY BENCH
54" RCP RISER 84" ANTI-VORT TOP 55.00 10"ø ORIFICE ELEV
20' WIDE TOP OF DAM ELEV 58.00
260' OF 8" DIP @ 0.4% CONC.
ENCASED
3:1
SF
EC-2 MATTING TO BE PLACED ALONG 3:1 FACE OF DAM

EC-2 MATTING TO BE PLACED ALONG 3:1 SIDE SLOPES AROUND ENTIRE POND

PROPOSED SANITARY SEWER LINE TO SERVE CHASEOAKS TO BE INSTALLED IN DAM. SEWER DESIGN AND INSTALLATION TO BE COMPLETED BEFORE DAM IS CONSTRUCTED.

10' WIDE CONCRETE EMERGENCY SPILLWAY
BOTTOM WIDTH - 10'
SIDE SLOPE 3:1
SPILLWAY TO BE 4" THICK
CLASS A-3 CONCRETE
SEE SHEET S4 FOR DETAIL
2-FOOT DEEP CUTOFF WALL
IS TO BE PROVIDED
AT BOTH ENDS OF THE
SPILLWAY TO PREVENT
UNDERMINING

EMERGENCY SPILLWAY CREST
ELEV 56.00

3:1

2:1

MH #11
RIM 60.00
INV 53.87

60

58

56

52

50

ELEV 52 IS APPROXIMATE LIMITS OF 100 YEAR FLOODPLAIN PER FEMA COMMUNITY-PANEL NUMBER 510201-0035B, DATED 2/6/91

POND
STANDING WATER

54" RCP RISER W/
84" ANTI-VORTEX DEVICE
TOP 55.00
10"ø ORIFICE ELEV 50.00

ELEV 49.6' WID.

10' WIDE GRASS EMERGENCY SPILLWAY

ROANE RIDGE ... APPROVAL OF ROANE RIDGE SITE PLAN IS ... CONSTRUCTION OF POND #2.

6) THE CONSTRUCTION ENTRANCE FOR THE RE... BE USED AS THE INGRESS / EGRESS POIN... OF POND I.

7) RECORD DRAWINGS WILL BE PROVIDED FOR ... COMPLETION. UPON COMPLETION THE CON... BE CERTIFIED BY A PROFESSIONAL ENGINE... STRUCTURE DURING CONSTRUCTION.

8) POND I & II TO BE CONSTRUCTED IN ACCO... OF "FINAL REPORT GEOTECHNICAL ENGINE... MANAGEMENT DETENTION BASINS THE VILL... FES PROJECT NO: 1-701218.001, DATED ...

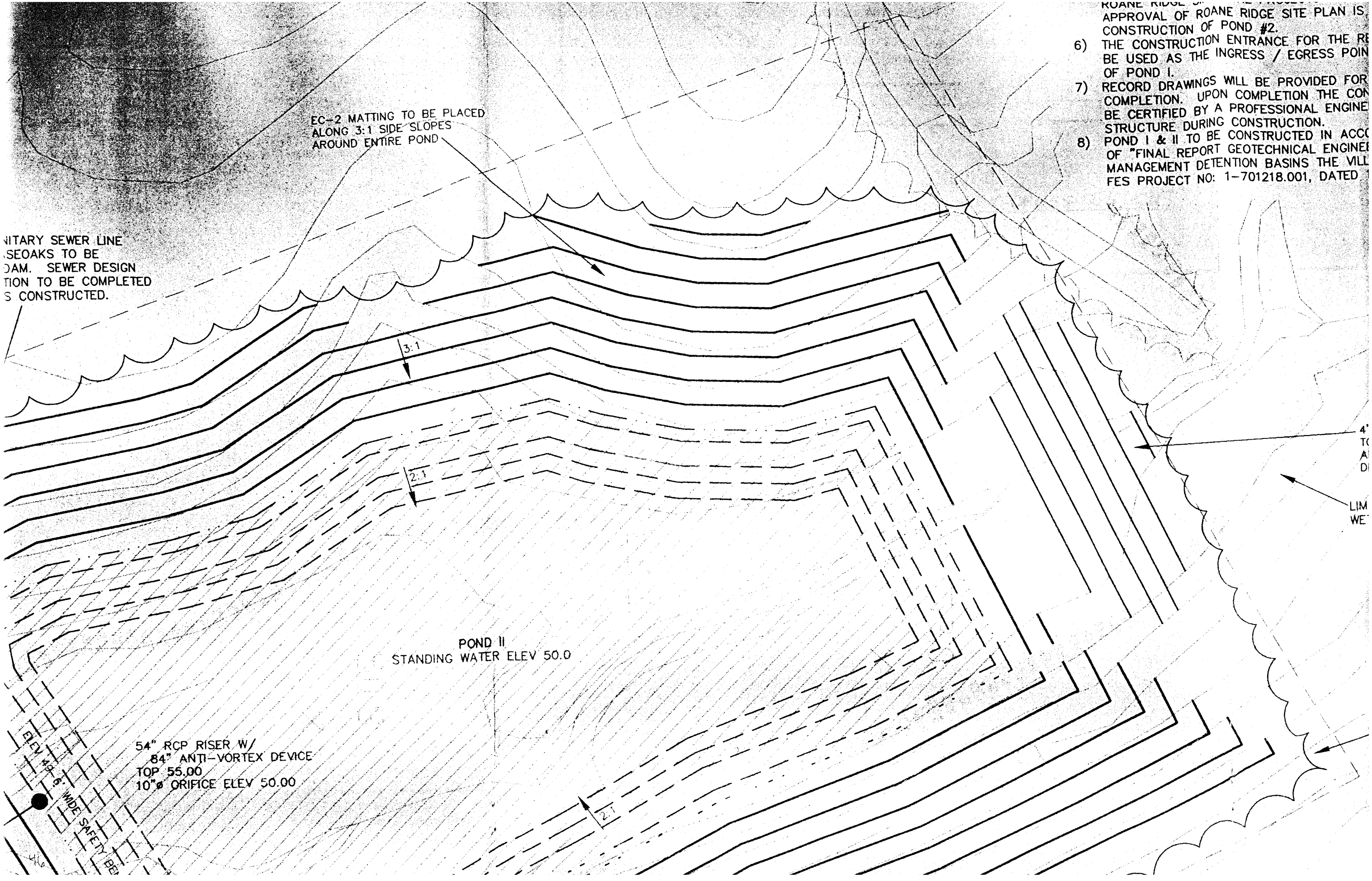

POND II
STANDING WATER ELEV 50.0

54" RCP RISER W/
84" ANTI-VORTEX DEVICE
TOP 55.00
10"ø ORIFICE ELEV 50.00

ELEV 49.6' WIDE SAFETY BENCH

70' OF 36" RCP @ 0.5% CONC. WITH CRADLE

20' WIDE TOP OF DAM ELEV 58.00

260' OF 8" DIP @ 0.4% CONC. ENCASED

ES-1
INV 49.65
30'X15'X26"
VDOT CLASS I
RIP RAP APRON

EC-2 MATTING TO BE PLACED
ALONG 3:1 FACE OF DAM

MAINTENANCE EASEMENT FOR
POND II DEDICTED TO HOA

270' OF 8" PVC @ 0.4%

MH #10
RIM 63.00
INV 52.83

OF PROPOSED
(TO DEWATER

EC-2 MATTING TO BE PLACED
ALONG 3:1 SIDE SLOPES
AROUND ENTIRE POND

PROPOSED SANITARY SEWER LINE
TO SERVE CHASEOAKS TO BE
INSTALLED IN DAM. SEWER DESIGN
AND INSTALLATION TO BE COMPLETED
BEFORE DAM IS CONSTRUCTED.

SPILLWAY

EMERGENCY SPILLWAY CREST
ELEV 56.00

3:1

2:1

POND II
STANDING WATER ELEV 50.0

54" RCP RISER W/
84" ANTI-VORTEX DEVICE
TOP 55.00
10"ø ORIFICE ELEV 50.00

ELEV 49.6' WIDE SAFETY BENCH

70' OF 36"
RCP @ 0.5%
WITH CONC.
CRADLE

20' WIDE TOP OF DAM ELEV 58.00

260' OF 8" DIP @ 0.4% CONC.

ENCASED

3:1

SF

NG TO BE PLACED
FACE OF DAM

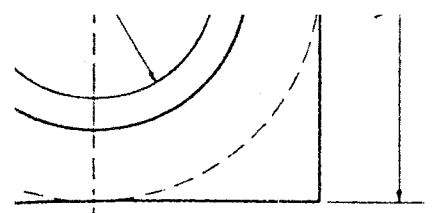

ND VIEW

CP&P

Technical Manual page 14.4

) COLLAR

ORIGINAL DATE	02-01-95	RCH
LAST REVISION		
SCALE	3/8 = 1'-0"	
TOPIC - PROJECT # - DRAWING #		
ST-1087-70		

RODUCTS CO., INC.
ginia 23209 □ 804-233-5471

POND II

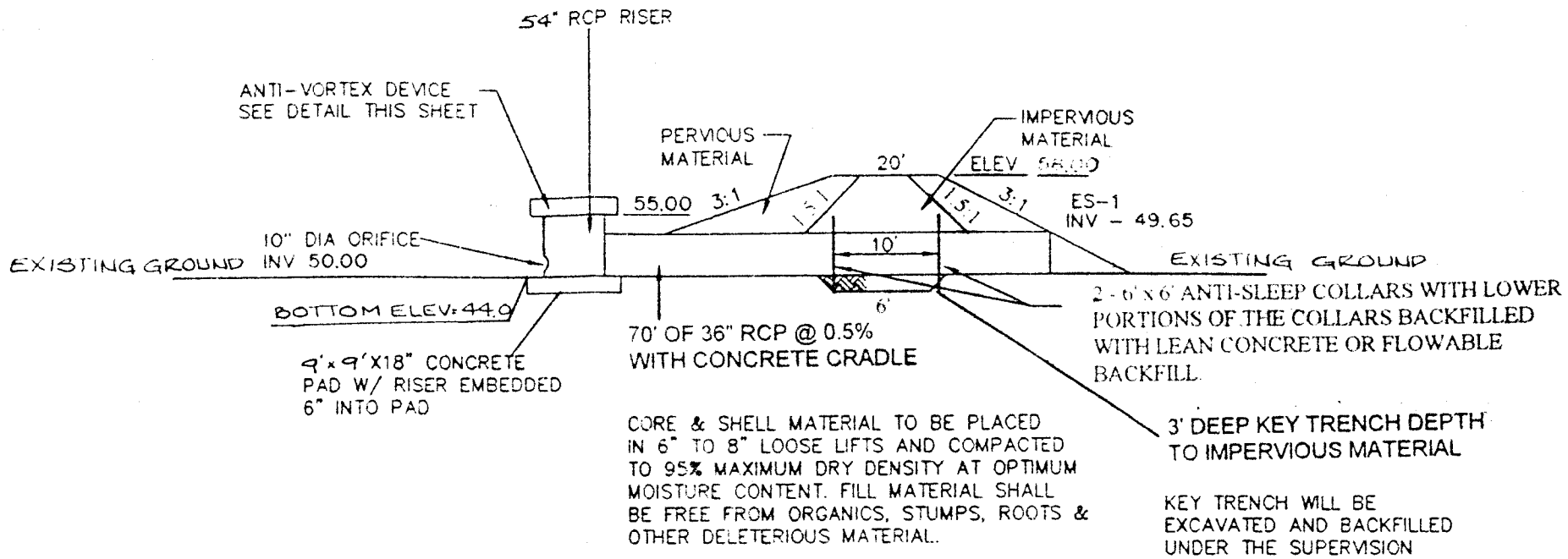

CORE & SHELL MATERIAL TO BE PLACED IN 6" TO 8" LOOSE LIFTS AND COMPACTED TO 95% MAXIMUM DRY DENSITY AT OPTIMUM MOISTURE CONTENT. FILL MATERIAL SHALL BE FREE FROM ORGANICS, STUMPS, ROOTS & OTHER DELETERIOUS MATERIAL.

KEY TRENCH WILL BE EXCAVATED AND BACKFILLED UNDER THE SUPERVISION OF A GEOTECHNICAL ENGINEER TO A MINIMUM DEPTH OF 4'-0"

REMOVAL OF UNSUITABLE MATERIAL UNDER DAM TO BE COMPLETED UNDER THE SUPERVISION OF A GEOTECHNICAL ENGINEER

POND OUTLET STRUCTURE

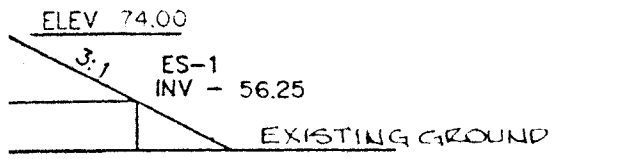

ANTI-SEEP COLLAR TO EXTEND 36" OUTSIDE LIMITS OF PIPE ON BOTTOM & SIDES, AND 24" ABOVE. LOCATED 19' DOWNSTREAM FROM CENTER OF 66" RISER.

POND ELEVATIONS

TOP ELEVATION	58.00
100 YR.. STORM ELEVATION	56.99
2 YR. STORM ELEVATION	53.66
STANDING WATER ELEVATION	50.00

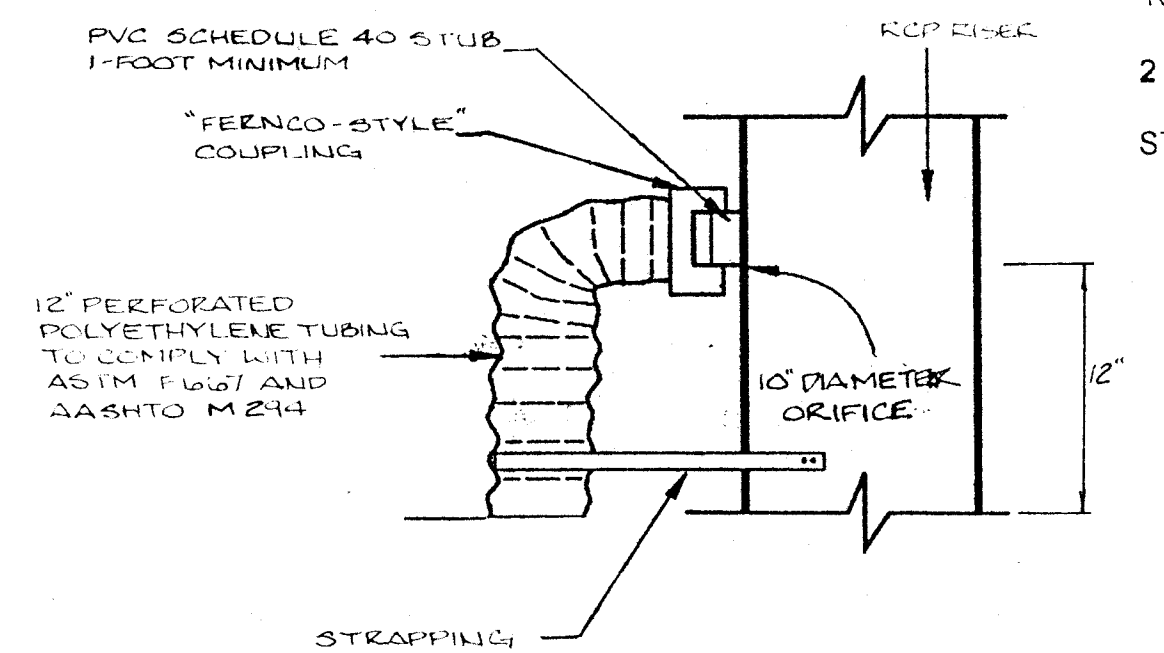

10" DIAMETER ORIFICE TRASH PROTECTION

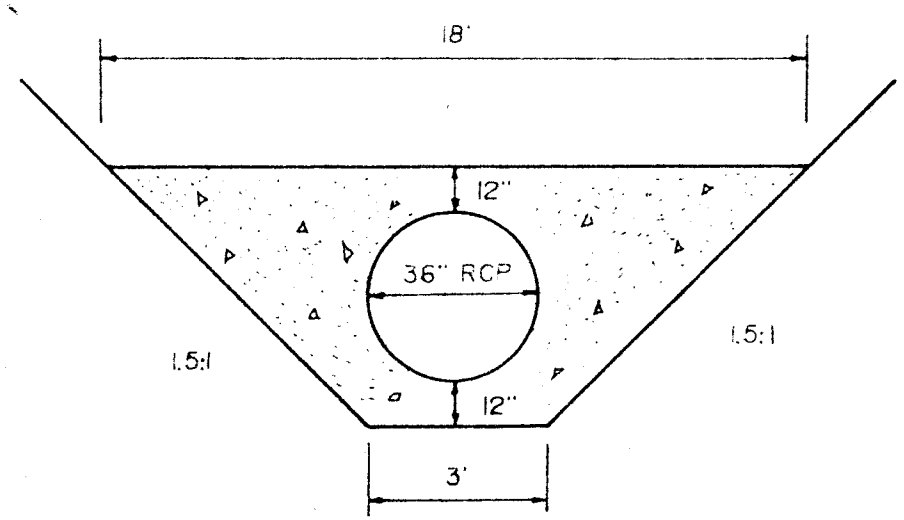

CONCRETE CRADLE

2 RJH REV PER COUNTY COMMENTS LTR DTD 10/2

THE VILLAGES AT WESTMINSTER
RETENTION PONDS
DETAIL SHEET

Job Number	Sheet
96106	S5

THE VILLAGES AT WESTMINSTER
PHASE V

JAMES CITY COUNTY, VIRGINIA

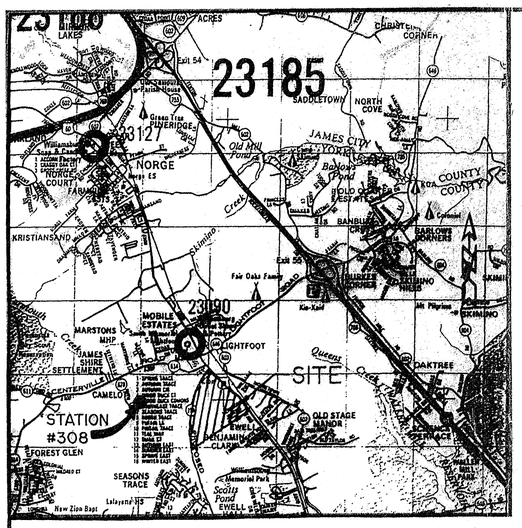

VICINITY MAP
SCALE: 1"=2000'

JAMES CITY COUNTY
GEODETIC STATION NO. 308
NORTHING 3649526.268
EASTING 11987969.427
ELEV 113.37

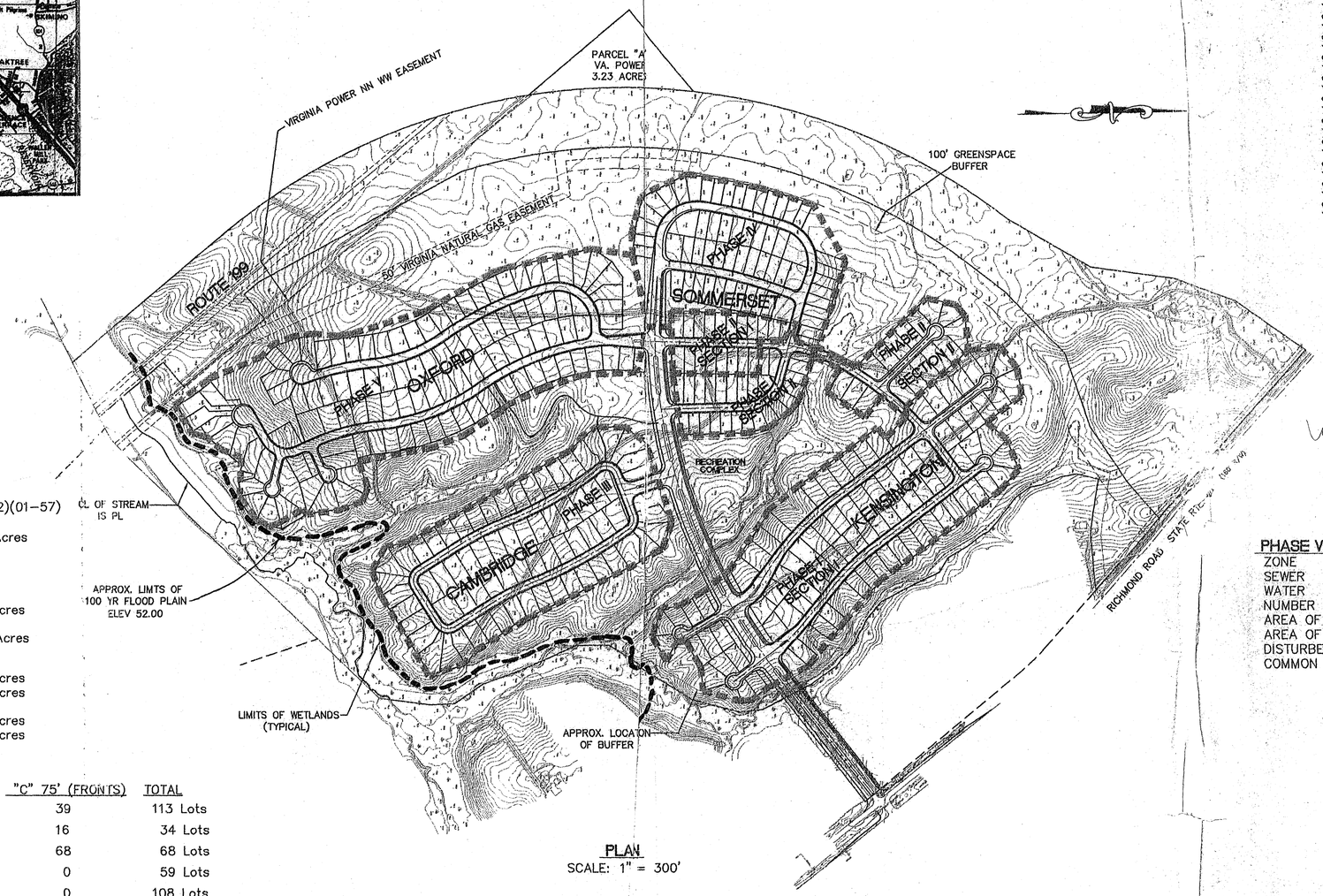

PLAN
SCALE: 1" = 300'

TABLE OF CONTENTS

SHEET CS	COVER SHEET
SHEET C2	LAYOUT PLAN
SHEET C3	LINE & CURVE TABLES
SHEET C4	SUBDIVISION PLAN
SHEET C5	SUBDIVISION PLAN
SHEET C6	PROFILE SHEET
SHEET C7	PROFILE SHEET
SHEET C8	PROFILE SHEET
SHEET C9	DETAIL SHEET
SHEET C10	DETAIL SHEET
SHEET C11	DETAIL SHEET
SHEET C12	DETAIL SHEET
SHEET C13	DETAIL SHEET
SHEET C14	PAVEMENT DESIGN SHEET
SHEET C15	25% SLOPES

WESTMINSTER V

OVERALL STATISTICAL INFORMATION

TAX MAP / PARCEL NO.:		(32-2)(01-57)
GROSS ACREAGE:		191 Acres
UNDEVELOPABLE AREA:		
WETLANDS	20 Acres	
25% OR GREATER SLOPES	6 Acres	
TOTAL UNDEVELOPABLE AREA		26 Acres
NET DEVELOPABLE AREA		165 Acres
OPEN SPACE		
REQUIRED: 40% x 165 Acres =		66 Acres
PROVIDED:		66 Acres
AREA SUBDIVIDED:		99 Acres
COMMON AREA:		92 Acres

TOTAL NUMBER OF LOTS:

	"A" 50' (FRONTS)	"B" 65' (FRONTS)	"C" 75' (FRONTS)	TOTAL
PHASE I	24	50	39	113 Lots
PHASE II	18	0	16	34 Lots
PHASE III	0	0	68	68 Lots
PHASE IV	59	0	0	59 Lots
PHASE V	0	108	0	108 Lots
TOTAL	101	158	123	382 Lots

NOTES:
1) 25' BUFFER ALONG ENTRANCE PARKWAY TO REMAIN IN ITS NATURAL STATE.
2) BUILDOUT OF THIS PROJECT AND THE OTHER PROPOSED PROJECTS IN THE SERVICE AREA OF LIFT STATION 6-2 WILL EXCEED THE LIFT STATION DESIGN CAPACITY. WHEN THAT CAPACITY IS REACHED ANY ADDITIONAL DEVELOPMENT WILL BE THE RESPONSIBLE FOR UPGRADING THE LIFT STATION TO PROVIDE ADDITIONAL CAPACITY.
3) 100 YEAR FLOOD PLAIN DELINEATED HEREON IS FROM FIRM FLOOD INSURANCE RATE MAPS COMMUNITY-PANEL NUMBER 510201 0020 B AND 510201 0035 B, EFFECTIVE DATE: FEBRUARY 6, 1991
4) ON APRIL 5, 1999 THE PLANNING COMMISSION GRANTED AN EXCEPTION TO THE SUBDIVISION ORDINANCE TO ALLOW FOR A CUL-DE-SAC LENGTH OF APPROXIMATELY 1,650 FEET.

300 0 300 900
Scale 1" = 300 ft

PHASE V STATISTICAL INFORMATION

ZONE	R2, RESIDENTIAL CLUSTER DEVELOPMENT
SEWER	PUBLIC
WATER	PUBLIC
NUMBER OF LOTS	108
AREA OF LOTS	22.55 ACRES
AREA OF RIGHT OF WAY	4.61 ACRES HEREBY DEDICATED FOR PUBLIC STREET PURPOSES
DISTURBED AREA	7.2 ACRES
COMMON AREA	0.48 ACRES

S-113-98

COUNTY OF JAMES CITY
FINAL SUBDIVISION

APPROVALS	DATE
Fire Dept	
Health Dept	
VDOT	
Planning	
Environ	
JCSA	
County Eng.	
REA	
Other	

APR 1999
RECEIVED
PLANNING DEPARTMENT

PHASE V

COMMONWEALTH OF VIRGINIA
K.M. JENKINS II
No. 022872
4/8/99
PROFESSIONAL ENGINEER

BEFORE DIGGING CALL "MISS UTILITY" OF VIRGINIA AT 1 - 800 - 552 - 7001

Rickmond Engineering, Inc
1643-C Merrimac Trail
Williamsburg VA 23185
(757)229-1776
Civil Engineer
Environmental Engineer
Land Surveyor

3	KMJ	REV PER COUNTY COMMENTS LTR DTD 4/7/99	KMJ	4.08.99	
2	KMJ	REV PER COUNTY COMMENTS LTR DTD 2/9/99	KMJ	3.15.99	
1	KMJ	REV PER COUNTY COMMENTS LTR DTD 12/11/98	KMJ	1.5.99	

Date: 6/26/98 Project No. 98161 File No. 98161CS Sheet No.

OWNER/DEVELOPER:

ATLANTIC HOMES DEVELOPMENT CORP.
2 EATON STREET
SUITE 101
HAMPTON, VIRGINIA 23669

1805

LOT TABLE

LOT	AREA
275	7498 SF
276	8601 SF
277	9370 SF
278	10,722 SF
279	12,004 SF
280	11,693 SF
281	9546 SF
282	8177 SF
283	8099 SF
284	8083 SF
285	7964 SF
286	7845 SF
287	7726 SF
288	7607 SF
289	7679 SF
290	7811 SF
291	8581 SF
292	8857 SF
293	9010 SF
294	8760 SF
295	7843 SF
296	7906 SF
297	8229 SF
298	8976 SF
299	9456 SF
300	8713 SF
301	8093 SF
302	8612 SF
303	8377 SF
304	8470 SF
305	8895 SF
306	9445 SF
307	9434 SF
308	9700 SF
309	8763 SF
310	8666 SF
311	8620 SF
312	8929 SF
313	8620 SF
314	8713 SF
315	8707 SF
316	8852 SF
317	8858 SF
318	8725 SF
319	8768 SF
320	8823 SF
321	8677 SF
322	9082 SF
323	8472 SF
324	7871 SF
325	8565 SF
326	8802 SF
327	8755 SF
328	8671 SF
329	8791 SF
330	8659 SF
331	8418 SF
332	8811 SF
333	9180 SF
334	9520 SF
335	8973 SF
336	8982 SF
337	9278 SF
338	9820 SF
339	8775 SF
340	8693 SF
341	8827 SF
342	10,066 SF
343	11,536 SF
344	9689 SF
345	12,776 SF
346	10,459 SF
347	9015 SF
348	10,297 SF
349	13,016 SF
350	11,037 SF
351	10,667 SF
352	7335 SF
353	10,443 SF
354	10,758 SF
355	12,335 SF
356	16,621 SF
357	9322 SF
358	11,068 SF
359	12,452 SF
360	12,053 SF
361	12,482 SF
362	10,452 SF
363	7864 SF
364	7791 SF
365	7669 SF
366	7867 SF
367	7867 SF
368	7867 SF
369	7867 SF
370	7861 SF
371	7790 SF
372	7643 SF
373	8125 SF
374	8141 SF
375	8160 SF
376	8183 SF
377	8217 SF
378	7763 SF
379	8438 SF
380	9008 SF
381	7700 SF
382	7448 SF

100 0 100 200 300

Scale 1" = 100'

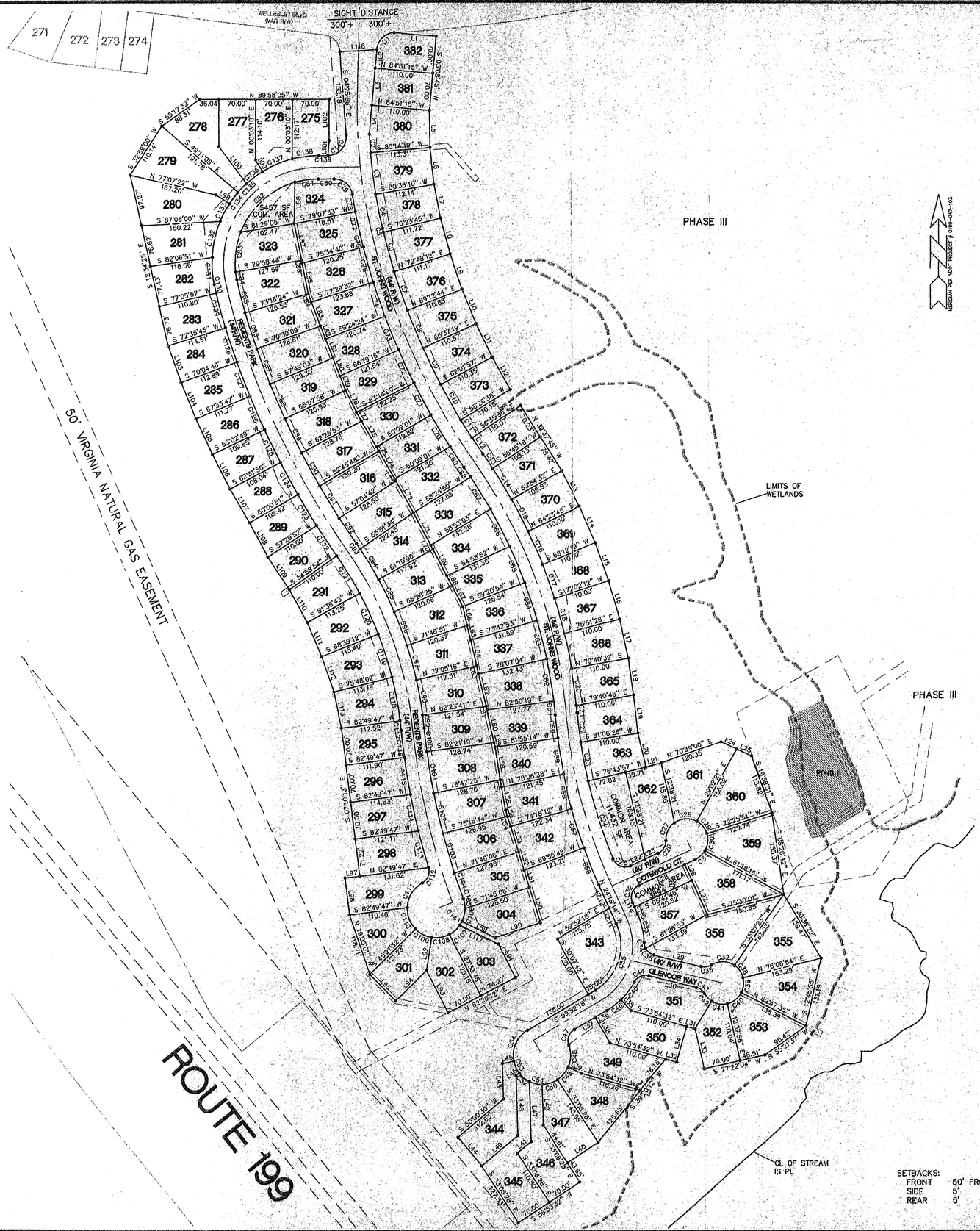

NOTES:
1) WETLANDS DELINEATED BY DOMINION ENVIRONMENTAL CONSULTANTS, INC. AND FIELD LOCATED BY RICKMOND ENGINEERING, INC.
2) MONUMENTS WILL BE INSTALLED AS REQUIRED IN SECTION 19-34 THROUGH 19-36 OF THE SUBDIVISION ORDINANCE. AT LEAST TWO NEW OR EXISTING MONUMENTS AT EXTERIOR SUBDIVISION BOUNDARIES SHALL BE REFERENCED TO THE COUNTY GEODETIC CONTROL NETWORK.
3) IN ACCORDANCE WITH SECTION 19-33 OF THE SUBDIVISION ORDINANCE, ALL UTILITIES SHALL BE PLACED UNDERGROUND.
4) ALL EXTERIOR SIGNS WILL BE IN ACCORDANCE WITH ARTICLE II, DIVISION 3 OF THE ZONING ORDINANCE.

SETBACKS:
FRONT 50' FROM CL OF ROAD
SIDE 5'
REAR 5'

BEFORE DIGGING CALL "MISS UTILITY" OF VIRGINIA AT 1 - 800 - 552 - 7001

Rickmond Engineering, Inc.
1643-C Merrimac Trail
Williamsburg, VA 23185
(757)229-1776
Civil Engineering
Environmental Engineering
Land Surveying

Designed By:	Drawn By:	Scale:	Date:	Job No.:	File Name:
KMJ	KMJ	1"=100'	6/26/98	98161	98161C7

COMMONWEALTH OF VIRGINIA
KYLE JENKINS II
No. 022872
PROFESSIONAL ENGINEER
4/8/99

No.	By	Revision	App.	Date
3	KMJ	REV PER COUNTY COMMENTS LTR DTD 4/7/99	KMJ	4.8.99
2	KMJ	REV PER COUNTY COMMENTS LTR DTD 2/26/99	KMJ	3.15.99
1	KMJ	REV PER COUNTY COMMENTS LTR DTD 12/11/98	KMJ	1.5.99

THE VILLAGES AT WESTMINSTER PHASE V
LAYOUT PLAN
VIRGINIA
JAMES CITY COUNTY

Job Number	Sheet No.
98161	C2

Apr 08 10:26:10 1999

CURVE TABLE

NUMBER	DELTA	CHORD BEARING	TAN.	RADIUS	LENGTH	CHORD
C1	81°54'04"	S 46°05'46" W	30.37	35.00	50.03	45.88
C2	02°00'54"	S 03°45'14" E	17.20	978.00	34.40	34.39
C3	04°38'09"	S 07°04'45" E	39.59	978.00	79.13	79.11
C4	03°52'51"	S 11°20'15" E	33.13	978.00	66.24	66.23
C5	00°19'46"	S 13°26'22" E	3.53	1228.00	7.06	7.06
C6	03°35'33"	S 15°24'01" E	38.51	1228.00	77.00	76.98
C7	03°35'28"	S 18°59'32" E	38.50	1228.00	76.97	76.96
C8	03°35'25"	S 22°34'58" E	38.49	1228.00	76.95	76.94
C9	03°35'22"	S 26°10'22" E	38.48	1228.00	76.93	76.92
C10	03°35'20"	S 29°45'42" E	38.47	1228.00	76.92	76.90
C11	01°51'01"	S 32°28'53" E	19.83	1228.00	39.66	39.66
C12	01°42'26"	S 34°15'37" E	18.30	1228.00	36.59	36.59
C13	01°52'08"	N 34°10'46" W	16.67	1022.00	33.33	33.33
C14	03°49'14"	N 31°20'05" W	34.09	1022.00	68.15	68.13
C15	03°49'14"	N 27°30'52" W	34.09	1022.00	68.15	68.13
C16	03°49'14"	N 23°41'38" W	34.09	1022.00	68.15	68.13
C17	03°49'14"	N 19°52'24" W	34.09	1022.00	68.15	68.13
C18	03°49'14"	N 16°03'11" W	34.09	1022.00	68.15	68.13
C19	03°49'14"	N 12°13'57" W	34.09	1022.00	68.15	68.13
C20	03°55'30"	N 08°21'36" W	35.02	1022.00	70.01	70.00
C21	00°45'56"	N 06°00'52" W	6.83	1022.00	13.66	13.66
C22	03°15'40"	S 07°15'44" E	27.84	978.00	55.66	55.66
C23	04°22'29"	S 11°04'49" E	37.36	978.00	74.68	74.66
C24	09°00'57"	S 17°46'32" E	77.11	978.00	153.89	153.73
C25	92°01'14"	S 68°17'37" E	25.90	25.00	40.15	35.97
C26	67°22'48"	N 32°00'22" E	16.67	25.00	29.40	27.74
C27	56°25'53"	S 26°31'54" W	21.46	40.00	39.40	37.82
C28	64°17'31"	S 86°53'36" W	25.14	40.00	44.88	42.57
C29	43°23'30"	N 39°15'54" W	15.91	40.00	30.29	29.57
C30	47°59'20"	N 06°25'31" E	17.80	40.00	33.50	32.53
C31	35°16'35"	N 48°03'29" E	12.72	40.00	24.63	24.24
C32	90°00'00"	S 20°41'46" W	25.00	25.00	39.27	35.36
C33	22°28'25"	N 13°04'01" W	28.21	142.00	55.70	55.34
C34	26°43'18"	S 15°11'28" E	5.94	25.00	11.66	11.55
C35	47°38'46"	S 52°22'30" E	11.04	25.00	20.79	20.20
C36	46°11'13"	N 80°42'31" E	10.66	25.00	20.15	19.61
C37	67°24'28"	N 88°40'52" W	26.68	40.00	47.06	44.39
C38	41°05'31"	N 34°25'52" W	14.99	40.00	28.69	28.08
C39	41°05'31"	N 06°39'39" E	14.99	40.00	28.69	28.08
C40	50°09'39"	N 52°17'14" E	18.72	40.00	35.02	33.91
C41	43°47'07"	S 80°44'22" E	16.07	40.00	30.57	29.83
C42	28°50'09"	S 44°25'44" E	10.28	40.00	20.13	19.92
C43	46°11'13"	N 53°06'16" W	10.66	25.00	20.15	19.61
C44	74°22'04"	S 66°37'05" W	18.96	25.00	[illegible]	30.22
C45	16°55'53"	N 37°54'00" E	21.14	142.00	41.96	41.81
C46	13°30'21"	N 53°07'07" E	16.81	142.00	33.47	33.40
C47	79°55'17"	S 19°54'39" W	20.95	25.00	34.87	32.11
C48	43°20'42"	N 01°37'22" E	21.86	55.00	41.61	40.62
C49	33°22'49"	N 39°59'08" E	16.49	55.00	32.04	31.59
C50	33°26'35"	N 73°23'50" E	16.52	55.00	32.10	31.65
C51	26°02'38"	S 76°51'34" E	12.72	55.00	25.00	24.79
C52	26°02'38"	S 50°48'55" E	12.72	55.00	25.00	24.79
C53	26°02'38"	S 24°46'17" E	12.72	55.00	25.00	24.79
C54	71°37'16"	S 24°03'40" W	39.68	55.00	68.75	64.36
C55	84°10'32"	N 17°47'02" E	88.51	98.00	143.98	131.37
C56	04°15'02"	S 22°10'43" E	37.93	1022.00	75.82	75.80
C57	04°21'24"	S 17°52'30" E	38.87	1022.00	77.71	77.69
C58	03°48'26"	S 13°47'35" E	33.97	1022.00	67.91	67.90
C59	03°48'36"	S 09°59'04" E	33.99	1022.00	67.95	67.95
C60	02°26'52"	S 06°51'20" E	21.83	1022.00	43.66	43.66
C61	01°31'47"	N 06°23'47" W	13.06	978.00	26.11	26.11
C62	04°43'16"	N 09°31'19" W	40.32	978.00	80.58	80.56
C63	04°24'11"	N 14°05'02" W	37.60	978.00	75.16	75.14
C64	04°21'59"	N 18°28'07" W	37.28	978.00	74.53	74.51
C65	04°22'02"	N 22°50'07" W	37.29	978.00	[illegible]	74.53
C66	04°37'51"	N 27°20'04" W	39.55	978.00	79.05	79.03
C67	04°09'26"	N 31°43'43" W	35.50	978.00	70.96	70.95
C68	01°18'24"	N 34°27'38" W	11.15	978.00	[illegible]	22.30
C69	02°06'33"	S 34°03'33" E	23.42	1272.00	46.83	46.82
C70	03°09'17"	S 31°25'38" E	35.03	1272.00	70.04	70.03
C71	03°05'08"	S 28°18'25" E	34.26	1272.00	68.50	68.49
C72	03°05'08"	S 25°13'18" E	34.26	1272.00	68.50	68.49
C73	03°05'08"	S 22°08'10" E	34.26	1272.00	68.50	68.49
C74	03°05'08"	S 19°03'02" E	34.26	1272.00	68.50	68.49
C75	03°05'08"	S 15°57'54" E	34.26	1272.00	68.50	68.49
C76	01°08'39"	S 13°51'00" E	12.70	1272.00	25.40	25.40
C77	02°24'13"	S 12°04'34" E	21.44	1022.00	42.88	42.87
C78	01°51'36"	S 09°56'39" E	16.59	1022.00	33.18	33.18
C79	81°24'44"	N 49°43'13" W	30.11	35.00	49.73	45.65
C80	00°35'16"	N 89°52'03" E	14.99	2922.00	29.98	29.98
C81	16°21'50"	S 81°58'46" W	22.72	158.00	45.13	44.97
C82	52°08'04"	S 47°43'49" W	77.29	158.00	143.77	138.86
C83	28°00'12"	S 07°39'40" W	39.40	158.00	77.22	76.46
C84	05°20'35"	S 09°00'43" E	7.37	158.00	14.73	14.73
C85	05°02'35"	S 14°12'18" E	32.06	728.00	64.08	64.06
C86	02°41'11"	S 18°09'16" E	35.69	1522.00	71.36	71.35
C87	02°41'05"	S 20°50'24" E	35.67	1522.00	71.32	71.31
C88	02°41'05"	S 23°31'29" E	35.67	1522.00	71.32	71.31
C89	02°41'05"	S 26°12'34" E	35.67	1522.00	71.32	71.31
C90	02°41'05"	S 28°53'40" E	35.67	1522.00	71.32	71.31
C91	02°41'05"	S 31°34'45" E	35.67	1522.00	71.32	71.31
C92	02°11'32"	S 34°01'04" E	29.12	1522.00	58.23	58.23
C93	00°58'24"	N 34°37'38" W	6.18	728.00	12.37	12.37
C94	05°18'25"	N 31°29'13" W	33.74	728.00	67.43	67.41
C95	05°18'25"	N 26°10'48" W	33.74	728.00	67.43	67.41
C96	05°18'25"	N 20°52'22" W	33.74	728.00	67.43	67.41
C97	05°18'25"	N 15°33'57" W	33.74	728.00	67.43	67.41
C98	05°18'25"	N 10°15'31" W	33.74	728.00	67.43	67.41
C99	01°58'25"	N 06°37'06" W	12.54	728.00	25.08	25.07
C100	02°01'29"	S 06°38'38" E	22.48	1272.00	44.95	44.94
C101	03°33'34"	S 09°26'10" E	39.52	1272.00	79.02	79.01
C102	03°30'20"	S 12°58'07" E	38.93	1272.00	77.83	77.82
C103	03°30'18"	S 16°28'26" E	38.92	1272.00	77.81	77.80
C104	02°18'08"	S 19°22'39" E	25.56	1272.00	51.11	51.11
C105	19°59'18"	N 10°04'06" W	9.69	55.00	19.19	19.09
C106	26°03'00"	N 12°57'03" E	12.72	55.00	25.01	24.79
C107	28°05'51"	N 48°23'17" E	13.76	55.00	26.97	26.70
C108	36°27'40"	N 80°40'02" E	18.12	55.00	35.00	34.41
C109	36°27'40"	S 62°52'18" E	18.12	55.00	35.00	34.41
C110	46°30'27"	S 21°23'15" E	23.63	55.00	44.64	43.43
C111	59°14'10"	S 31°29'04" W	31.27	55.00	56.86	54.36
C112	78°13'42"	N 21°59'17" E	20.33	25.00	34.13	31.54
C113	03°08'05"	S 15°33'31" E	36.01	1316.00	72.00	71.99
C114	03°03'40"	S 12°27'38" E	35.16	1316.00	70.31	70.30
C115	03°03'01"	S 09°24'18" E	35.04	1316.00	70.06	70.05
C116	02°14'53"	S 06°45'21" E	25.82	1316.00	51.64	51.63
C117	01°32'19"	N 06°24'04" W	9.19	684.00	18.37	18.37
C118	07°01'45"	N 10°41'06" W	42.01	684.00	83.91	83.86
C119	07°08'50"	N 17°46'23" W	42.72	684.00	85.32	85.27
C120	07°02'29"	N 24°52'03" W	42.08	684.00	84.06	84.01
C121	06°56'38"	N 31°51'36" W	41.50	684.00	82.90	82.84
C122	02°30'59"	S 33°45'37" E	34.39	1566.00	68.78	68.77
C123	02°30'59"	S 31°14'38" E	34.39	1566.00	68.78	68.77
C124	02°30'59"	S 28°43'40" E	34.39	1566.00	68.78	68.77
C125	02°30'59"	S 26°12'41" E	34.39	1566.00	68.78	68.77
C126	02°30'59"	S 23°41'42" E	34.39	1566.00	68.78	68.77
C127	02°30'59"	S 21°10'43" E	34.39	1566.00	68.78	68.77
C128	02°30'59"	N 18°39'44" W	34.39	1566.00	68.78	68.77
C129	03°59'17"	N 14°53'41" W	26.88	772.00	53.74	53.73
C130	01°13'02"	S 12°17'32" E	8.20	772.00	16.40	16.40

CURVE TABLE

NUMBER	DELTA	CHORD BEARING	TAN.	RADIUS	LENGTH	CHORD
C131	14°34'10"	S 04°23'56" E	25.82	202.00	51.37	51.23
C132	19°52'29"	N 12°49'24" E	35.39	202.00	70.07	69.72
C133	10°39'16"	S 28°05'16" W	18.84	202.00	37.56	37.51
C134	07°30'41"	S 37°10'15" W	13.26	202.00	26.48	26.46
C135	06°40'45"	N 44°15'58" E	11.79	202.00	23.55	23.53
C136	10°52'58"	S 53°02'49" W	19.24	202.00	38.37	38.31
C137	17°28'39"	S 67°13'38" W	31.05	202.00	61.62	61.38
C138	14°11'43"	S 83°03'49" W	25.15	202.00	50.05	49.92
C139	00°22'01"	N 89°58'40" E	9.22	2878.00	18.43	18.43
C140	94°13'38"	S 42°40'51" W	37.68	35.00	57.56	51.29
C141	08°21'49"	S 30°09'27" W	4.02	55.00	8.03	8.02

LINE TABLE

NUMBER	DIRECTION	DISTANCE
L1	N 84°51'15" W	79.93'
L2	N 05°08'45" E	35.35'
L3	N 05°08'45" E	70.00'
L4	N 05°08'45" E	55.17'
L5	N 00°32'43" W	70.00'
L6	S 06°07'20" E	70.00'
L7	S 11°10'35" E	65.00'
L8	N 14°57'00" W	70.00'
L9	S 18°42'54" E	70.00'
L10	S 22°22'10" E	70.00'
L11	S 25°59'24" E	70.00'
L12	S 29°36'05" E	70.00'
L13	S 27°38'36" E	75.46'
L14	S 23°41'38" E	75.47'
L15	S 19°52'24" E	75.47'
L16	S 16°03'11" E	75.47'
L17	S 12°13'57" E	75.47'
L18	S 08°24'44" E	70.00'
L19	S 07°03'51" E	72.05'
L20	S 13°16'03" E	66.21'
L21	N 73°54'39" E	30.34'
L22	S 65°41'46" W	29.97'
L23	S 65°41'46" W	27.18'
L24	S 64°39'45" E	33.23'
L25	S 64°39'45" E	30.75'
L26	N 24°18'14" W	33.45'
L27	N 24°18'14" W	70.25'
L28	S 65°41'46" W	95.41'
L29	N 76°11'53" W	92.27'
L30	N 76°11'53" W	92.27'
L31	N 73°54'32" W	16.66'
L32	N 73°54'32" W	21.61'
L33	N 12°37'56" W	77.01'
L34	N 16°05'28" E	70.00'
L35	N 43°38'04" W	28.00'
L36	S 59°52'18" W	25.79'
L37	S 59°52'18" W	45.44'
L38	N 30°07'42" W	56.13'
L39	N 64°21'36" W	28.02'
L40	S 56°53'32" W	70.00'
L41	S 50°00'30" W	34.12'
L42	N 01°51'20" W	76.44'
L43	N 01°51'20" W	66.83'
L44	N 39°59'30" W	70.00'
L45	N 78°15'02" E	21.98'
L46	N 52°12'24" E	7.79'
L47	N 01°51'20" W	113.02'
L48	N 01°51'20" W	112.57'
L49	S 50°00'30" W	89.46'
L50	N 17°17'54" W	70.01'
L51	N 17°17'54" W	33.48'
L52	N 17°17'54" W	36.53'
L53	N 17°17'54" W	50.50'
L54	N 17°17'54" W	19.50'
L55	N 17°17'54" W	12.33'
L56	N 10°07'30" W	44.32'
L57	N 10°07'30" W	13.43'
L58	S 09°03'15" E	62.57'
L59	S 12°25'55" E	8.44'
L60	S 12°25'[illegible]	63.56'
L61	N 13°20'25" W	6.62'
L62	N 13°20'25" W	63.38'
L63	N 13°20'25" W	15.20'
L64	N 13°20'25" W	49.80'
L65	N 13°20'25" W	28.67'
L66	S 12°58'15" [illegible]	36.33'
L67	S 27°57'57" E	42.88'
L68	S 27°57'57" E	22.12'
L69	S 27°57'57" [illegible]	56.33'
L70	S 27°57'57" E	8.67'
L71	S 27°57'57" E	70.00'
L72	N 28°58'18" W	68.14'
L73	N 30°15'07" W	4.67'
L74	N 30°09'57" W	60.60'
L75	N 30°09'57" W	9.40'
L76	N 30°09'57" W	55.86'
L77	N 30°09'57" W	19.19'
L78	N 26°50'11" W	46.18'
L79	N 21°26'42" W	28.96'
L80	N 21°26'42" W	36.40'
L81	N 21°26'42" W	38.63'
L82	S 21°26'42" E	26.65'
L83	N 21°26'42" W	48.50'
L84	N 19°09'49" W	16.80'
L85	N 11°29'06" W	58.47'
L86	N 11°29'06" W	5.50'
L87	N 11°29'06" W	70.17'
L88	N 01°01'56" E	78.24'
L89	S 64°01'27" E	69.97'
L90	S 71°46'06" W	90.04'
L91	N 27°33'48" W	70.19'
L92	N 08°53'52" E	62.79'
L93	N 27°33'48" W	89.42'
L94	N 45°21'32" E	82.00'
L95	N 44°38'28" W	70.00'
L96	N 07°10'13" W	70.00'
L97	S 82°49'47" W	28.17'
L98	S 56°35'06" E	31.00'
L99	S 31°30'42" E	25.65'
L100	S 37°07'12" E	87.44'
L101	N 04°10'23" E	28.08'
L102	N 00°03'10" E	78.09'
L103	S 19°55'14" E	73.78'
L104	S 22°26'13" E	73.71'
L105	S 24°57'11" E	73.64'
L106	S 27°28'10" E	73.57'
L107	S 29°59'09" E	73.50'
L108	S 28°27'31" E	73.61'
L109	N 33°45'37" W	73.60'
L110	S 29°13'43" E	70.00'
L111	S 23°06'42" E	70.00'
L112	S 19°03'49" E	71.00'
L113	N 11°43'34" W	70.00'
L114	S 24°18'14" E	8.45'
L115	S 24°18'14" E	14.44'
L116	S 86°32'08" W	70.73'
L117	S 64°01'27" E	81.39'

BEFORE DIGGING CALL "MISS UTILITY"
OF VIRGINIA AT 1 - 800 - 552 - 7001

Rickmond Engineering, Inc.
Civil Engineering
Environmental Engineering
Land Surveying
1643-C Merrimac Trail
Williamsburg, VA 23185
(757)229-1776

Designed By:	Drawn By:	Scale:	Date:	Job No.:	File Name:
KMJ	KMJ	1"=100'	6/26/98	98161	98161RC3

COMMONWEALTH OF VIRGINIA
K M JENKINS II
No. 022872
4/8/99
PROFESSIONAL ENGINEER

No.	By	Revision	App.	Date
3	KMJ	REV PER COUNTY COMMENTS LTR DTD 4/7/99	KMJ	4.8.99
2	KMJ	REV PER COUNTY COMMENTS LTR DTD 2/9/99	KMJ	3.15.99
1	KMJ	REV PER COUNTY COMMENTS LTR DTD 12/11/98	KMJ	1.5.99

THE VILLAGES AT WESTMINSTER PHASE V
LINE & CURVE TABLES
JAMES CITY COUNTY VIRGINIA

Job Number	Sheet No.
98161	C3

I:\98161\98161RC3 Thu Apr 08 10:34:04 1999

NOTES:
1) ALL DIMENSIONS ARE TO FACE OF CURB.
2) SILT FENCE TO BE INSTALLED ALONG ALL LIMITS OF CLEARING.
3) SEWER SYSTEM TO BE CONSTRUCTED IN ACCORDANCE WITH JCSA SANITARY SEWER SYSTEM STANDARDS & SPECIFICATIONS.
4) WATER SYSTEM TO BE CONSTRUCTED IN ACCORDANCE WITH JCSA WATER SYSTEM STANDARDS & SPECIFICATIONS.
5) SIDEWALKS TO BE TROWLED OR BROOMED FINISHED CONCRETE. CG-12 (HANDICAP RAMPS) TO BE EXPOSED AGGREGATE WITH RIVER RUN GRAVEL.
6) FILTER FABRIC TO LINE ALL RIP RAP TO SOIL SURFACES.
7) THE FOLLOWING DEVELOPMENT (PHASE V) HAS THE POTENTIAL TO PRODUCE 1008 TRIPS PER DAY = 108 LOTS X 10 TPD/LOT.
8) IN AREAS WHERE WATERLINE IS INSTALLED IN FILL COMPACTION SHALL BE TO 95%.
9) ANY OLD WELLS THAT MAY BE ON SITE MUST BE PROPERLY ABANDONED ACCORDING TO STATE PRIVATE WELL REGULATIONS.
10) ALL FACE OF CURB RADII AT INTERSECTIONS ARE 35' UNLESS OTHERWISE NOTED.
11) WETLANDS DELINEATED BY DOMINION ENVIRONMENTAL CONSULTANTS, INC. AND FIELD SURVEYED BY RICKMOND ENGINEERING, INC.
12) A STANDARD VDOT STOP SIGN IS REQUIRED AT ALL STREET INTERSECTIONS. THE STOP SIGN IS TO BE FURNISHED & INSTALLED BY THE DEVELOPER.
13) SEE SHEET C11 FOR THRUST RESTRAINT TABLE.
14) A 4' GREENSPACE IS LOCATED BETWEEN THE BACK OF CURB AND 4' SIDEWALK.
15) WETLANDS & LAND WITHIN RESOURCE PROTECTION AREAS SHALL REMAIN IN A NATURAL UNDISTURBED STATE EXCEPT FOR THOSE ACTIVITIES PERMITTED BY SECTION 19B-9C(1) OF THE JAMES CITY CODE.
16) CONNECT ALL VDOT UD-1 TO STORM DRAINAGE STRUCTURES.
17) FOR SETBACK PURPOSES, ON ALL CORNER LOTS, THE SHORTER OF THE TWO SIDES SHALL BE CONSIDERED THE FRONT.
18) UNLESS OTHERWISE STATED, ALL DRAINAGE EASEMENTS SHALL REMAIN PRIVATE.
19) TEMPORARY SOIL STOCKPILE AREAS, STAGING, AND EQUIPMENT STORAGE AREAS ARE LOCATED IN THE CLEARED RIGHT OF WAY.
20) ACCESS TO SEDIMENT TRAPS WILL BE PROVIDED THROUGH THE 20' CLEARED PATH LEADING TO THE TRAPS.
21) ALL SEDIMENT TRAPS WILL REMAIN IN PLACE UNTIL A MAJORITY OF THE SINGLE FAMILY HOUSE CONSTRUCTION IS COMPLETE FOR EACH DRAINAGE AREA. THE TIMING OF THE TRAP REMOVAL IS DETERMINED BY THE JCC ENVIRONMENTAL DIVISION.

SEQUENCE OF CONSTRUCTION

1. CLEAR MINIMAL AREA TO INSTALL EROSION & SEDIMENT CONTROL MEASURES
2. CLEAR REMAINING DESIGNATED AREAS
3. INSTALL STORM SEWER
4. INSTALL SANITARY SEWER
5. INSTALL WATERLINE
6. INSTALL ROAD BASE
7. INSTALL CURB & GUTTER
8. SEED & STRAW DISTURBED AREAS
9. INSTALL ASPHALT AREAS
10. REMOVE EROSION & SEDIMENT CONTROL MEASURES AFTER PERMANENT STABILIZATION

MERIDIAN PER VDOT PROJECT # 0199-047-103

BUILDING SETBACK LINES (BSBL):
FRONT 50' FROM CENTERLINE OF ROAD
SIDE 5'
REAR 5'

LEGEND

LIMITS OF CLEARING
CONSTRUCTION ENTRANCE (CE)
SILT FENCE (SF)
INLET PROTECTION (IP)
SEDIMENT TRAP (ST)
LEVEL SPREADER (LS)
CLEANOUT
WATER METER
LIMITS OF WETLANDS
STREET LIGHT
STOP SIGN
BUILDING SETBACK LINE BSBL

60 0 60 120 180
Scale 1" = 60'

Rickmond Engineering, Inc.
1643-C Merrimac Trail
Williamsburg, VA 23185
(757)229-1776
Civil Engineering
Environmental Engineering
Land Surveying

Designed By:	Drawn By:	Scale:	Date:	Job No.:	File Name:
KMJ	KMJ	1"=60'	6/26/98	98161	98161RC4

COMMONWEALTH OF VIRGINIA
K.M. JENKINS II
No. 022872
4/8/99
PROFESSIONAL ENGINEER

No.	By	Revision	App.	Date
3	KMJ	REV PER COUNTY COMMENTS LTR DTD 4/7/99	KMJ	4.8.99
2	KMJ	REV PER COUNTY COMMENTS LTR DTD 2/26/99	KMJ	3.15.99
1	KMJ	REV PER COUNTY COMMENTS LTR DTD 12/11/98	KMJ	1.5.99

THE VILLAGES AT WESTMINSTER PHASE V
SUBDIVISION PLAN
JAMES CITY COUNTY VIRGINIA

Job Number 98161
Sheet No. C4

I:\98161\98161RC4 Thu Apr 08 09:57:50 1999

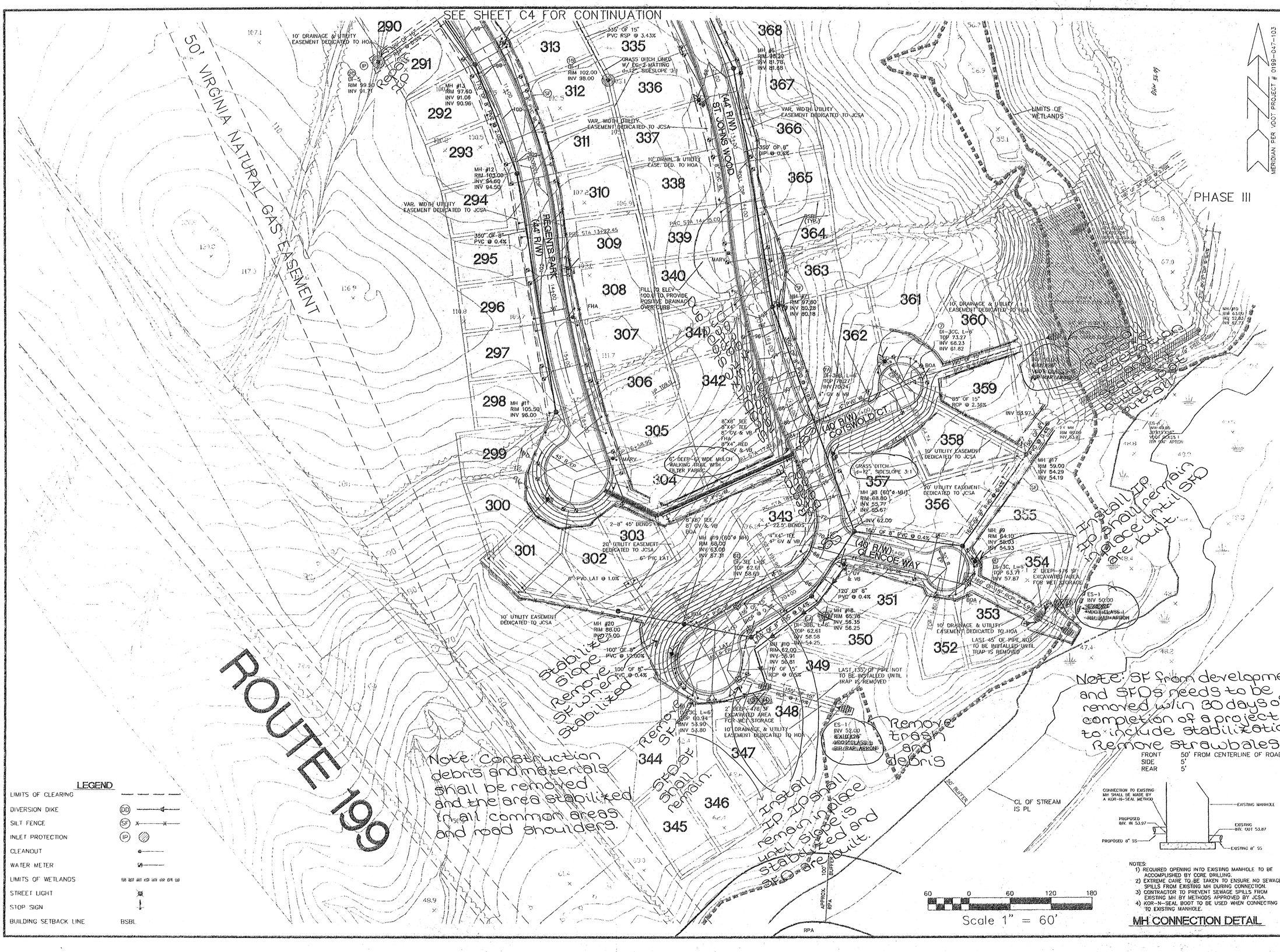

Rickmond Engineering, Inc.
1643-C Merrimac Trail
Williamsburg, VA 23185
(757)229-1776
Civil Engineering
Environmental Engineering
Land Surveying

Designed By:	Drawn By:	Scale:	Date:	Job No.:	File Name:
KMJ	KMJ	1"=60'	6/26/98	98161	98161RC5

COMMONWEALTH OF VIRGINIA
K.M. JENKINS II
No. 022872
4/18/99
PROFESSIONAL ENGINEER

No.	By	Revision	Date	App.
3	KMJ	REV PER COUNTY COMMENTS LTR DTD 4/7/99	KMJ	4.8.99
2	KMJ	REV PER COUNTY COMMENTS LTR DTD 2/9/98	KMJ	3.15.99
1	KMJ	REV PER COUNTY COMMENTS LTR DTD 12/11/98	KMJ	1.5.99

THE VILLAGES AT WESTMINSTER PHASE V
SUBDIVISION PLAN
JAMES CITY COUNTY VIRGINIA

Job Number	Sheet No.
98161	C5

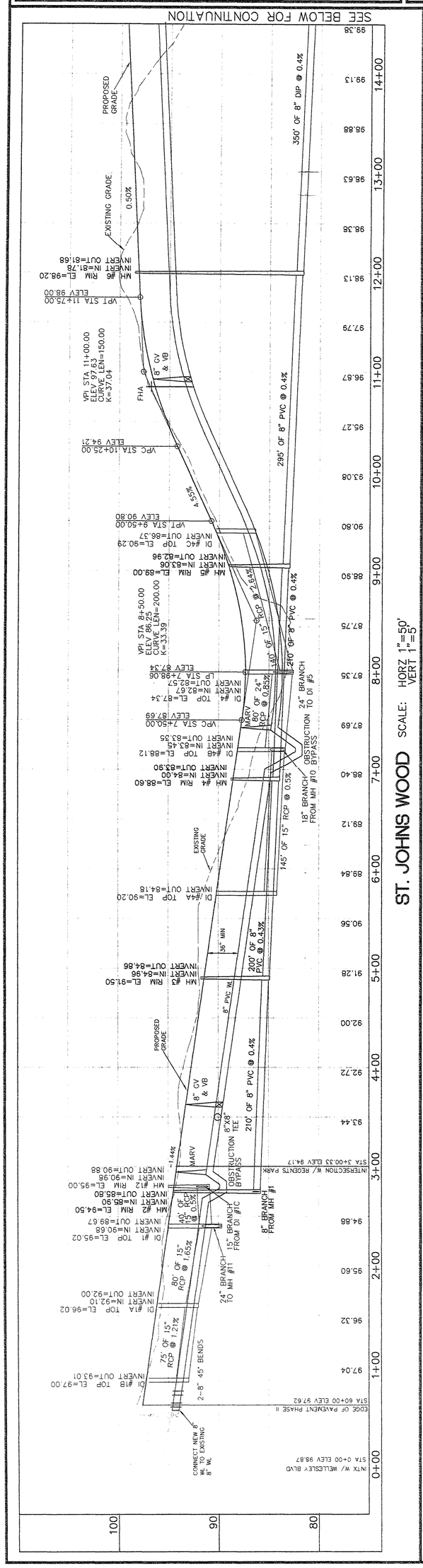

ST. JOHNS WOOD

SCALE: HORZ 1"=50'
VERT 1"=5'

COTSWOLD COURT

SCALE: HORZ 1"=50'
VERT 1"=5'

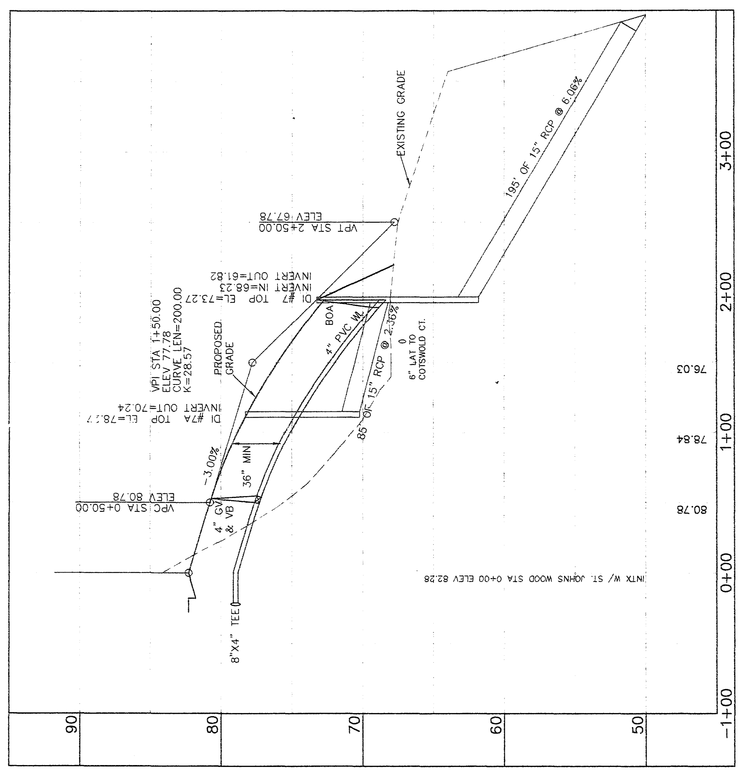

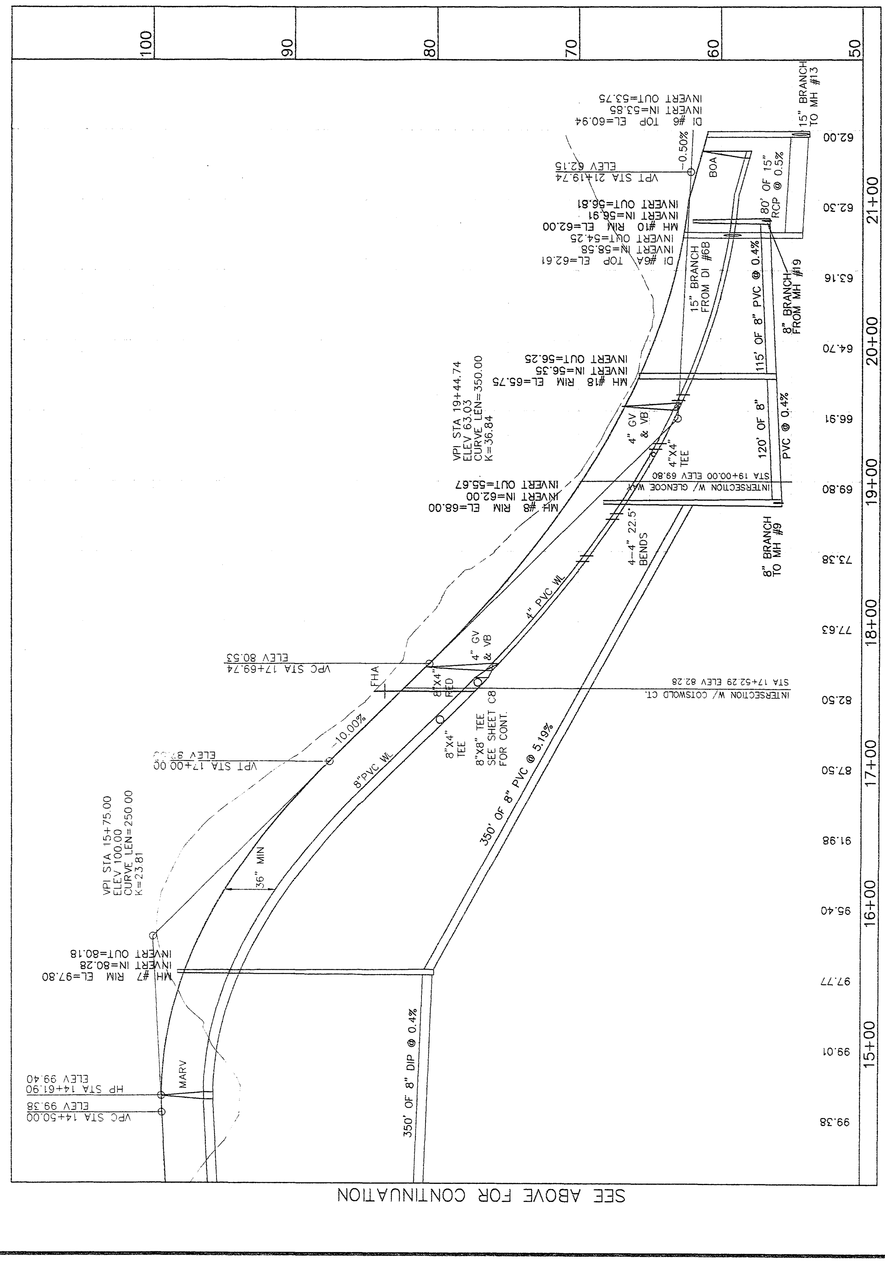

Rickmond Engineering, Inc.
1643-C Merrimac Trail
Williamsburg, VA 23185
(757)229-1776
Civil Engineering
Environmental Engineering
Land Surveying

COMMONWEALTH OF VIRGINIA
PROFESSIONAL ENGINEER
KYLE L. JENKINS II
No. 022812

No.	By	Revision	App.	Date
1	KWJ	REV PER COUNTY COMMENTS LTR DTD 12/11/98	KWJ	1.5.99
2	KWJ	REV PER COUNTY COMMENTS LTR DTD 2/9/98	KWJ	3.15.99
3	KWJ	REV PER COUNTY COMMENTS LTR DTD 4/7/99	KWJ	4.8.99

Designed by: KWJ | Drawn By: KWJ | Scale: AS NOTED | Date: 6/26/98 | Job No.: 98161 | File Name: 98161C6

THE VILLAGES AT WESTMINSTER PHASE V

PROFILE SHEET

JAMES CITY COUNTY VIRGINIA

Job Number 98161

Sheet No. C6

I 98161\98161C6 Thu Apr 08 09:34:25 1999

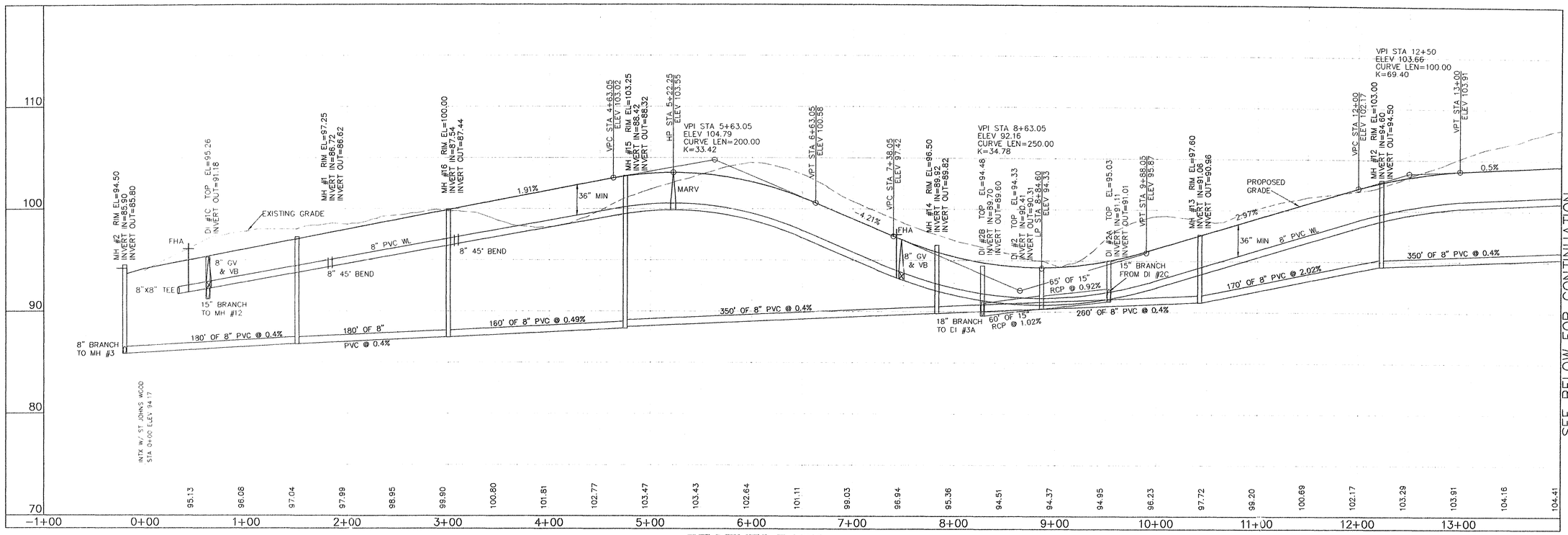

SEE BELOW FOR CONTINUATION

REGENTS PARK

SCALE: HORZ 1"=50'
VERT 1"=5'

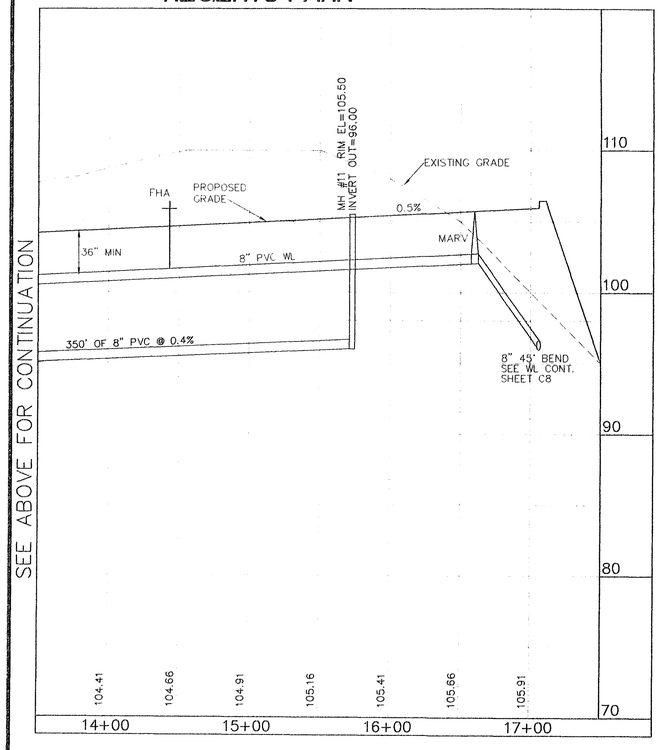

GLENCOE WAY

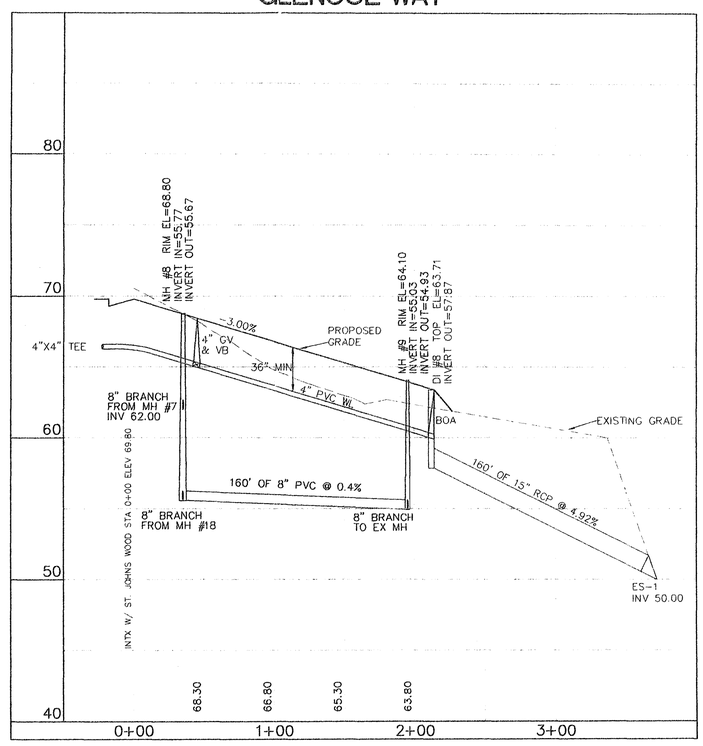

Rickmond Engineering, Inc.
Civil Engineering
Environmental Engineering
Land Surveying
1643-C Merrimac Trail
Williamsburg, VA 23185
(757)229-1776

Designed By: KMJ | Drawn By: KMJ | Scale: AS NOTED | Date: 6/26/98 | Job No.: 98161 | File Name: 98161C7

COMMONWEALTH OF VIRGINIA
KEVIN M. JOHNSON
No. 022872
PROFESSIONAL ENGINEER
3/19/99

No.	By	Revision	Date	App.
1	KMJ	REV PER COUNTY COMMENTS_LTR DTD 12/11/98	1.5.99	KMJ
2	KMJ	REV PER COUNTY COMMENTS_LTR DTD 2/9/99	3.15.99	KMJ

THE VILLAGES AT WESTMINSTER PHASE V
PROFILE SHEET
JAMES CITY COUNTY VIRGINIA

Job Number: 98161
Sheet No.: C7

SANITARY SEWER

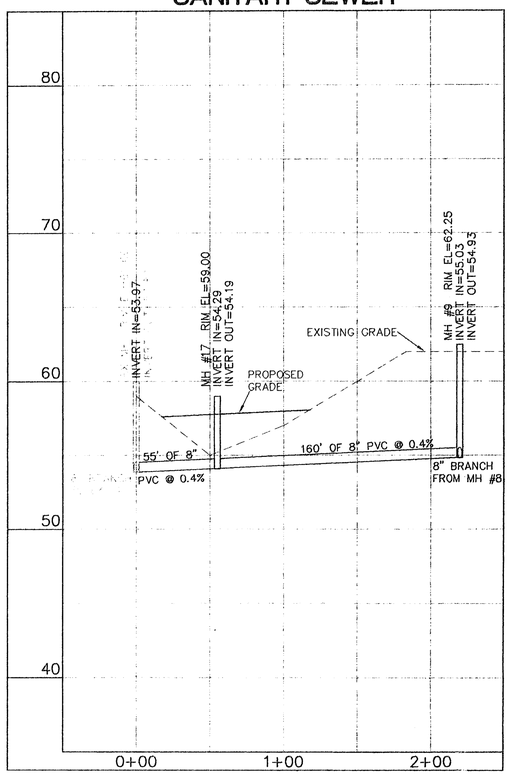

WATERLINE BEHIND LOTS 303, 304, AND 343

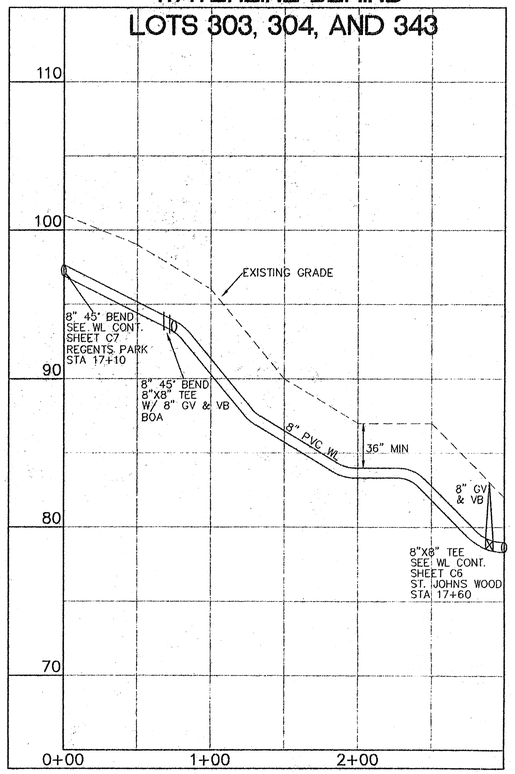

SCALE: HORZ 1"=50'
VERT 1"=5'

6" SANITARY SEWER LATERAL SERVING COTSWOLD COURT

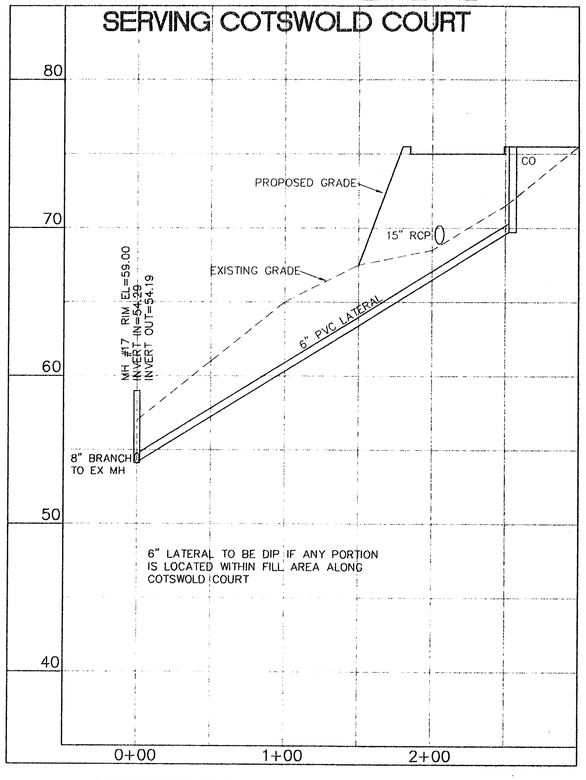

SCALE: HORZ 1"=50'
VERT 1"=5'

SANITARY SEWER SERVING REGENTS PARK

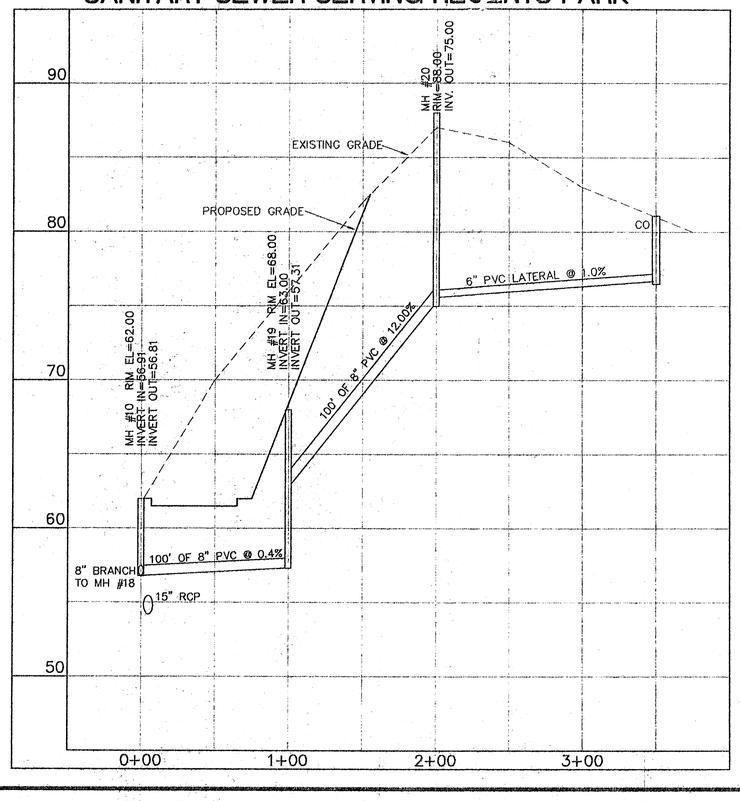

Rickmond Engineering, Inc.
1643-C Merrimac Trail
Williamsburg, VA 23185
(757)229-1776
Civil Engineering
Environmental Engineering
Land Surveying

Designed By:	Drawn By:	Scale:	Date:	Job No.:	File Name:
KMJ	KMJ	AS NOTED	6/26/98	98161	98161C8

COMMONWEALTH OF VIRGINIA ENGINEER
K.M. JENKINS II
No. 022872
PROFESSIONAL

No.	By	Revision	App.	Date
3	KMJ	REV PER COUNTY COMMENTS LTR DTD 4/7/99	KMJ	4.8.99
2	KMJ	REV PER COUNTY COMMENTS LTR DTD 2/26/99	KMJ	3.15.99
1	KMJ	REV PER COUNTY COMMENTS LTR DTD 12/11/98	KMJ	1.5.99

THE VILLAGES AT WESTMINSTER PHASE V
PROFILE SHEET
JAMES CITY COUNTY VIRGINIA

Job Number	Sheet No.
98161	C8

I:\98161\98161C8 Thu Apr 08 11:49:51 1999

GENERAL NOTES

____ 1 All materials and construction within the public right of way shall be in accordance with current Virginia Department of Transportation's specifications and standards.
____ 2 Permits must be obtained from the Virginia Department of Transportation BEFORE construction is started within the existing right of way.
____ 3 Prior to any construction, the contractor shall consult the engineer and verify the approval of the plans by the various agencies.
____ 4 The contractor shall verify the elevations of all points of connection or proposed work to existing curbs, sanitary lines, water lines, etc., prior to construction.
____ 5 When soils occur that are unsuitable for foundations, subgrades, or other roadway purposes, the contractor shall be required to excavate such material below the grade shown on the plans. The areas so excavated shall be backfilled with suitable material and compacted in accordance with VDOT specifications. The contractor shall immediately inform the engineer upon discovery of the unsuitable material. Concurrence of the developer shall be obtained before additional on-site work is undertaken.
____ 6 All storm sewer pipe shall be reinforced tongue and grove concrete pipe in accordance with ASTM-C-76 or alternative pipe that has been approved on the plans. Pipe within the right of way shall be a minimum CL-111 or greater in accordance with VDOT standards 107.05 and specifications 232 and 302.
____ 7 Temporary drainage during construction is to be provided by the contractor to relieve areas that may cause damage to roadways or adjacent property.
____ 8 All concrete shall be class A3-AE (air entrained 3,000 PSI).
____ 9 Curb and gutter shall have 4" of aggregate base 21B under the curb and gutter and aggregate shall extend 1' beyond the back of the curb.
____ 10 All curb and gutter shall have a standard gutter entrance in accordance with VDOT standards.
____ 11 All entrances are to be built in accordance with VDOT standards.
____ 12 The developer is responsible for furnishing and installing stop signs at street intersections.
____ 13 Design or specified materials changes from the approved plans need to be re-submitted to VDOT. A letter needs to accompany the revised plans and/or drainage calculations which shall be submitted to VDOT for review and approval by the resident engineer.
____ 14 The contractor/sub-contractor shall have a current copy of VDOT's "Road and Bridge Specifications" and "Road and Bridge Standards" on the project.

____ 15 VDOT is to receive written notification 48 hours prior to the start of any work.
____ 16 The contractor shall be responsible for locating and protecting all utilities, whether or not shown on the plans, and shall repair at his own expense all utilities damaged by construction. Miss Utility must be contacted at 1-800-552-7001 72 hours prior to the beginning of construction.
____ 17 All utility pedestals, cabinets, fire hydrants, and street lights shall be located a minimum of 9.5' from the edge of pavement adjacent to the right of way line on curb and gutter streets and/or located behind the ditch line on open ditch streets. Pedestals and cabinets should be located at the property lines between lots. Where required, fire hydrant crossings shall have a minimum of 15" of RCP or larger, as warranted in open roadside ditches and have 8' length.
____ 18 All storm sewer pipes, drop inlets, and curb inlets shall be cleaned of debris and eroded material during last stages of construction.
____ 19 The contractor shall be responsible for replacing, with matching materials, any pavement, driveways, walks, curbs, etc., that must be cut or that are damaged during construction.
____ 20 Any errors, conflicts, or discrepancies in this plan shall be reported to the engineer for resolution before proceeding with the work.
____ 21 Compaction reports, with proctor, are required for subgrade, subbase, base, surface course, culverts, drainage structures, and utilities within the right of way by a certified materials test lab in accordance with VDOT specifications and standards.
____ 22 Installation of pipe culverts, storm sewers, and drainage structures shall have bedding material in accordance with VDOT specifications and standards. Backfill shall be suitable material free of debris, tree roots, and excess moisture, and compacted.
____ 23 All roadside ditches shown as paved on plans are to be paved in accordance with the standard typical section as shown on the plans, unless otherwise directed by the resident engineer, in writing. Any additional paving of the ditches, other than those shown on the road plans will be determined prior to acceptance of the roads into the VDOT secondary road system.
____ 24 VDOT and county approval of subdivision road plans does not preclude the right to add additional facilities.
____ 25 VDOT approval of these plans will expire three years from the date of approval.
____ 26 Clearing and grubbing shall be completed within the right of ways, and indicated on the layout plan.

____ 27 The subgrade must be approved by VDOT prior to placement of base.
____ 28 Base must be approved by VDOT for depth, template, and compaction before surface is applied.
____ 29 All utilities are to be in place prior to laying base material.
____ 30 An actual copy of the CBR report is to be submitted to VDOT prior to approval of the the pavement typical design. If the CBR values are less 10, the developer will be required to submit for our approval, his proposed method of construction.
____ 31 Paved ditches may be required where field conditions warrant. Generally, all ditches with slopes exceeding 3% or 1% or less shall be paved unless otherwise approved by the engineer, owner, VDOT, and the local governing body.
____ 32 All erosion and sediment control measures shall be the responsibility of the road contractor.
____ 33 All vegetation and overburden to be removed from shoulder to shoulder prior to the condition of subgrade.
____ 34 Certification and source of materials are to be submitted to VDOT of all materials and be in accordance with the "Road and Bridge Specifications" and "Road and Bridge Standards."

MS-2

SPECIFICATION REFERENCE 502

STANDARD RAISED GRASS MEDIAN STRIPS

VIRGINIA DEPARTMENT of TRANSPORTATION — 202.04

CG-3

"STONE MUST BE 4" DEEP AND EXTEND 1' BEHIND THE BACK OF THE CURB. THE STONE UNDER THE CURB AND GUTTER SHALL BE CHECKED BY VDOT PRIOR TO PAVING OR BACKFILLING."

When this standard is to be tied into existing barrier curb, the transition is to be made within 10' or the change in standards made at regular openings.

This curb shall be used when design speed is greater than 40 MPH on Rural highways and 45 MPH in developed Urban and Suburban areas.

NOTES

This item may be precast or cast in place.

Concrete to be Class A3 if cast in place, 4000 PSI if precast.

Curb having a radius of 300 ft. or less (along face of curb) will be paid for as radial curb.

*The depth of curb may be reduced as much as 3" (13" depth) or increased as much as 3" (19" depth) in order that the bottom of curb will coincide with the top of a course of the pavement substructure. Otherwise the depth is to be 16" as shown. No adjustment in the price bid is to be made for a decrease or an increase in depth.

STANDARD 4" CURB

VIRGINIA DEPARTMENT OF TRANSPORTATION

201.02 — SPECIFICATION REFERENCE 105 502

ROLL TOP
(6" at top of curb ≈ 155mm)
(1.5" at invert line ≈ 40mm)

Dimensions

A	11.5 in	(290mm)
B	1 ft 0 in	(310mm)
C	2 ft 0 in	(610mm)
D	2 in	(50mm)
E	7 in	(180mm)
F	1 ft 6 in	(460mm)
R1	1 ft 6 in	(460mm)
R2	1 ft 3 in	(380mm)

"STONE MUST BE 4" DEEP AND EXTEND 1' BEHIND THE BACK OF THE CURB. THE STONE UNDER THE CURB AND GUTTER SHALL BE CHECKED BY VDOT PRIOR TO PAVING OR BACKFILLING."

ROLL TOP CURB DETAIL

TEMPORARY SEDIMENT TRAP

CROSS SECTION OF OUTLET

**COARSE AGGREGATE SHALL BE VDOT #3, #357 OR #5

OUTLET (PERSPECTIVE VIEW)

SEDIMENT TRAP DATA TABLE						
Sediment Trap	H	Ho	W	L	Wet Volume	Dry Volume
1	5'	4'	4.5'	18'	5427cf (D=4)	5427cf
2	5'	4'	4.5'	18'	5427cf (D=4)	5427cf
3	3'	2'	2.5'	3'	810cf (D=2')	810cf
4	5'	4'	4.5'	14'	4158cf (D=4')	4158cf

D = EXECAVATION DEPTH FOR WET VOLUME

Maintenance

1. Sediment shall be removed and the trap restored to its original dimensions when the sediment has accumulated to one half the design volume of the wet storage. Sediment removal from the basin shall be deposited in a suitable area and in such a manner that it will not erode and cause sedimentation problems.

2. Filter stone shall be regularly checked to ensure that filtration performance is maintained. Stone choked with sediment shall be removed and cleaned or replaced.

3. The structure should be checked regularly to ensure that it is structurally sound and has not been damaged by erosion or construction equipment. The height of the stone outlet should be checked to ensure that its center is at least 1 foot below the top of the embankment.

TEMPORARY DIVERSION DIKE

Rickmond Engineering, Inc.
1643-C Merrimac Trail
Williamsburg VA 23185
(757)229-1776
Civil Engineering
Environmental Engineering
Land Surveying

Designed By:	Drawn By:	Scale:	Date:	Job No.:	File Name:
KMJ	KMJ	AS NOTED	6/26/98	98161	98161DS

No.	By	Revision	App	Date

THE VILLAGES AT WESTMINSTER PHASE V

DETAIL SHEET

JAMES CITY COUNTY VIRGINIA

Job Number	Sheet No.
98161	C9

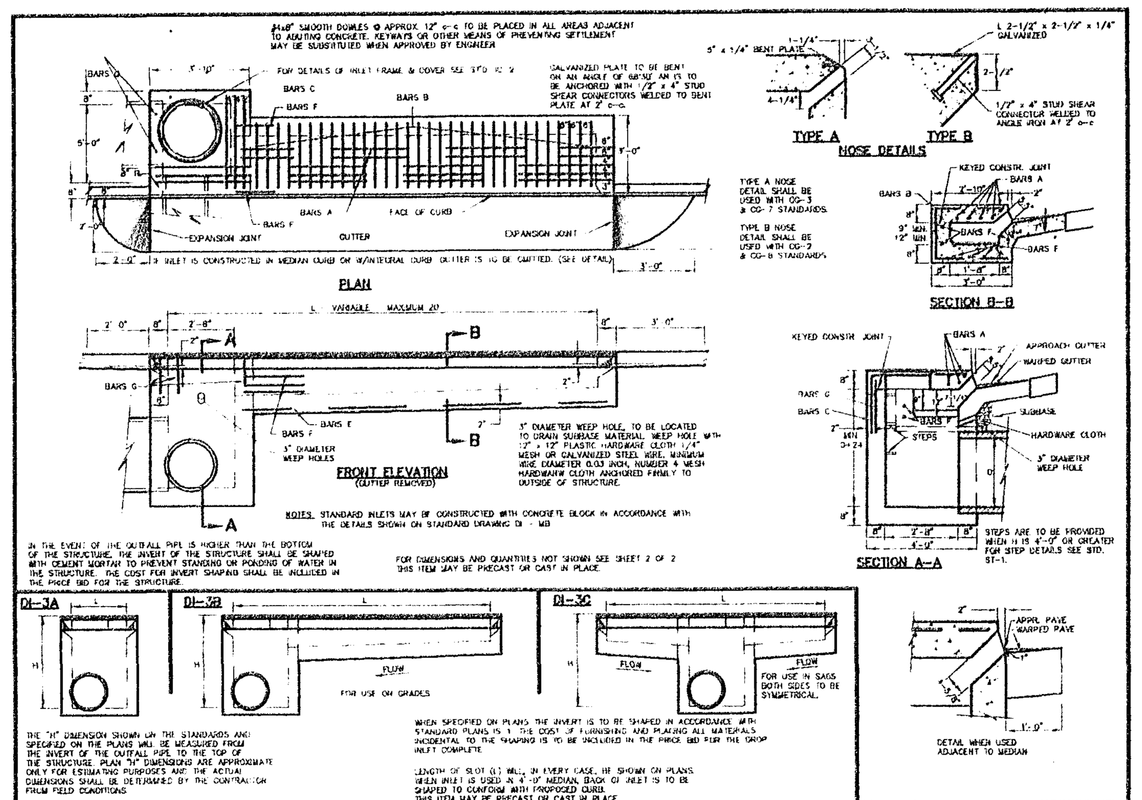

STANDARD CURB DROP INLET
12"–30" PIPE MAXIMUM DEPTH (H) = 8'

TABLE OF QUANTITIES

TYPE	L	AREA OF SLOT	CON–CRETE	REINFORCING STEEL: BARS A No.	BARS A Lin. Ft.*	BARS B No.	BARS B Lin. Ft.*	BARS C No.	BARS C Lin. Ft.*	BARS D No.	BARS D Lin. Ft.*	BARS E No.	BARS E Lin. Ft.*	BARS F No.	BARS F Lin. Ft.*	BARS G No.	BARS G Lin. Ft.*	WEIGHT
	Ft.	Sq. Ft.	Cu. Yd.	No.	Lin. Ft.*	No.	Lin. Ft.*	No.	Lin. Ft.*	No.	Lin. Ft.*	No.	Lin. Ft.*	No.	Lin. Ft.*	No.	Lin. Ft.*	Lbs.
DI–3A	2'–6"	1.15	2.26	–	–	–	–	1	5'–7"	3	3'–2"	–	–	3	–	6	1'–0"	22
DI–3B	4'	1.83	2.59	5	1'–6"	2	6'–7" to 6'–10"	3	5'–7"	3	3'–2"	4	1'–6"	3	1'–6"	4	1'–0"	64
	6'	2.75	3.02	5	3'–6"	6	6'–7" to 6'–10"	3	5'–7"	3	3'–2"	4	3'–6"	3	1'–6"	4	1'–0"	111
	8'	3.67	3.46	5	5'–6"	10	6'–7" to 6'–10"	3	5'–7"	3	3'–2"	4	5'–6"	3	1'–6"	4	1'–0"	158
	10'	4.58	3.90	5	7'–6"	14	6'–7" to 6'–10"	3	5'–7"	3	3'–2"	4	7'–6"	3	1'–6"	4	1'–0"	204
	12'	5.50	4.34	5	9'–6"	18	6'–7" to 6'–10"	3	5'–7"	3	3'–2"	4	9'–6"	3	1'–6"	4	1'–0"	251
	14'	6.42	4.78	5	11'–6"	22	6'–7" to 6'–10"	3	5'–7"	3	3'–2"	4	11'–6"	3	1'–6"	4	1'–0"	298
	16'	7.33	5.22	5	13'–6"	26	6'–7" to 6'–10"	3	5'–7"	3	3'–2"	4	13'–6"	3	1'–6"	4	1'–0"	345
	18'	8.25	5.66	5	15'–6"	30	6'–7" to 6'–10"	3	5'–7"	3	3'–2"	4	15'–6"	3	1'–6"	4	1'–0"	391
	20'	9.17	6.09	5	17'–6"	34	6'–7" to 6'–10"	3	5'–7"	3	3'–2"	4	17'–6"	3	1'–6"	4	1'–0"	438
DI–3C	6'	2.75	3.01	10	1'–9"	4	6'–7" to 6'–10"	5	5'–7"	3	3'–2"	8	1'–9"	6	1'–6"	2	1'–0"	111
	8'	3.67	3.45	10	2'–9"	8	6'–7" to 6'–10"	5	5'–7"	3	3'–2"	8	2'–9"	6	1'–6"	2	1'–0"	158
	10'	4.58	3.89	10	3'–9"	12	6'–7" to 6'–10"	5	5'–7"	3	3'–2"	8	3'–9"	6	1'–6"	2	1'–0"	205
	12'	5.50	4.33	10	4'–9"	16	6'–7" to 6'–10"	5	5'–7"	3	3'–2"	8	4'–9"	6	1'–6"	2	1'–0"	252
	14'	6.42	4.77	10	5'–9"	20	6'–7" to 6'–10"	5	5'–7"	3	3'–2"	8	5'–9"	6	1'–6"	2	1'–0"	298
	16'	7.33	5.21	10	6'–9"	24	6'–7" to 6'–10"	5	5'–7"	3	3'–2"	8	6'–9"	6	1'–6"	2	1'–0"	345
	18'	8.25	5.65	10	7'–9"	28	6'–7" to 6'–10"	5	5'–7"	3	3'–2"	8	7'–9"	6	1'–6"	2	1'–0"	392
	20'	9.17	6.09	10	8'–9"	32	6'–7" to 6'–10"	5	5'–7"	3	3'–2"	8	8'–9"	6	1'–6"	2	1'–0"	439

* DENOTES LENGTH OF ONE (1) BAR

NOTES: ALL REINFORCING BARS TO BE No. (5)

ALL CAST IN PLACE CONCRETE TO BE CLASS A3. FOR ACCEPTABLE ALTERNATE SEE PRECAST STANDARD DESIGNS.

CONCRETE QUANTITIES SHOWN ARE FOR DEPTH (H) OF 5'–2" WITHOUT PIPES. THE AMOUNT DISPLACED BY PIPES MUST BE DEDUCTED TO OBTAIN TRUE QUANTITIES. FOR INLETS OF DIFFERENT DEPTHS ADD OR SUBTRACT 0.32 Cu. Yds. OF CONCRETE FOR EACH FOOT OF DIFFERENCE IN DEPTH.

LENGTH OF ANGLE IRON AS SHOWN ON SHEET 1 IS L + 16" @ 4.10 Lbs. Per Ft.

STANDARD CURB DROP INLET
12"–30" PIPE MAXIMUM DEPTH (H) = 8'

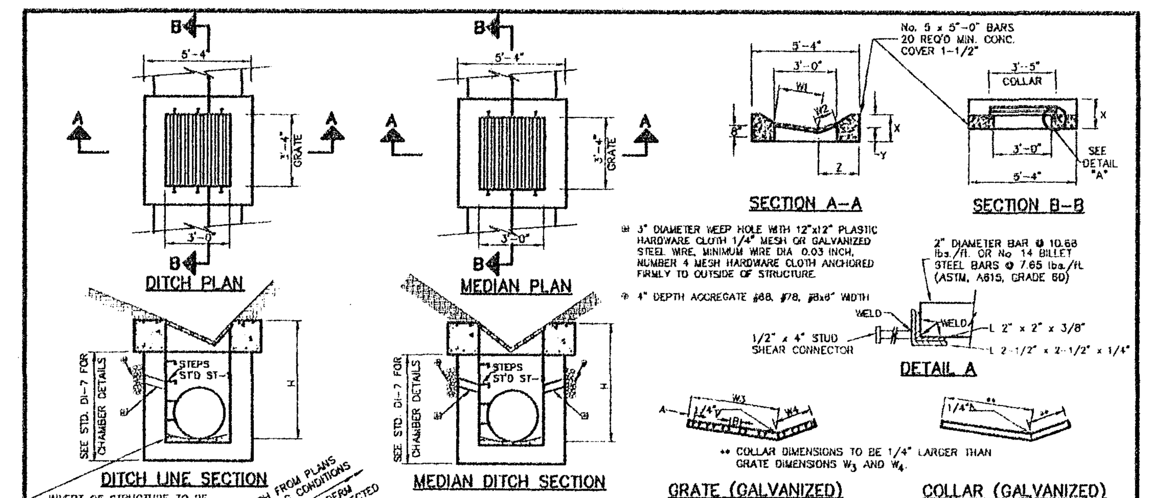

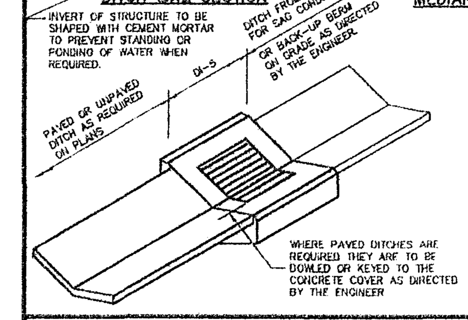

* TOLERANCE 1/2" ±

ST'D. PG–1 TYPE	COVER DIMENSIONS AND QUANTITIES: W_1	W_2	W_3	W_4	D	X	Y	Z	CONC. CU. YDS	REIN. STEEL lbs	GRATE BAR SPACING CHART: GRATE TYPE	MAX. DIMENSION A	MAX. DIMENSION B
A	3'–5"	1'–10"	2'–0–7/8"	1'–1–3/8"	6"	17"	10"	1'–10"	.815	105	I	1–1/2"	3"
B	3'–0"	1'–2"	2'–5–1/16"	11–5/16"	8"	17"	10"	1'–8"	.892	105	II	1–1/2"	1–1/2"
C	2'–3"	2'–3"	1'–8–1/16"	1'–8–1/16"	9"	19"	12"	2'–8"	.935	105	III	1"	1"

THE "H" DIMENSION SHOWN ON THE STANDARDS AND SPECIFIED ON THE PLANS WILL BE MEASURED FROM THE INVERT OF THE OUTFALL PIPE TO THE TOP OF THE STRUCTURE. PLAN "H" DIMENSIONS ARE APPROXIMATE ONLY FOR ESTIMATING PURPOSES AND THE ACTUAL DIMENSIONS SHALL BE DETERMINED BY THE CONTRACTOR FROM FILLED CONDITIONS.

CHAMBER MAY BE CAST IN PLACE, PRECAST, BRICK, OR CONCRETE BLOCK. FOR DETAILS SEE STD DI–7

ALL CAST IN PLACE CONCRETE TO BE CLASS A3.

STEPS IN ACCORDANCE WITH ST'D. ST–1 ARE TO BE PROVIDED WHEN DIMENSION "H" IS 4'–0" OR GREATER.

STANDARD DITCH DROP INLET

* QUANTITIES SHOWN ARE FOR MANHOLE WITHOUT PIPES. THE AMOUNT DISPLACED BY PIPES MUST BE DEDUCTED TO OBTAIN TRUE QUANTITIES. A BASE THICKNESS OF 9' WAS USED IN COMPUTING CONCRETE QUANTITIES.

‡ INCREMENTS TO BE ADDED FOR EACH ADDITIONAL FOOT OF DEPTH.

MATERIALS MAY BE BRICK, CONCRETE OR APPROVED CONCRETE MANHOLE BLOCK. IF BLOCKS ARE USED THE MINIMUM THICKNESS OF SAME IS TO BE 5". OTHER THICKNESSES ARE TO CONFORM TO WALL THICKNESS SHOWN FOR CONCRETE.

NOTE: THE TOP OF MASONRY IS TO BE LEFT SUFFICIENTLY LOW TO PERMIT PROPER ADJUSTMENT OF COVER AND FRAME TO GRADE BY THE USE OF MORTAR OR BRICK AS DIRECTED BY THE ENGINEER.

ALL CONCRETE IS TO BE CLASS A3

FLAT SLAB TOP AS DETAILED ON STANDARD MH–2 MAY BE SUBSTITUTED FOR TAPERED SECTION WHEN APPROVED BY ENGINEER.

WHEN SPECIFIED ON PLANS THE INVERT IS TO BE SHAPED IN ACCORDANCE WITH STANDARD PLAN IS–1

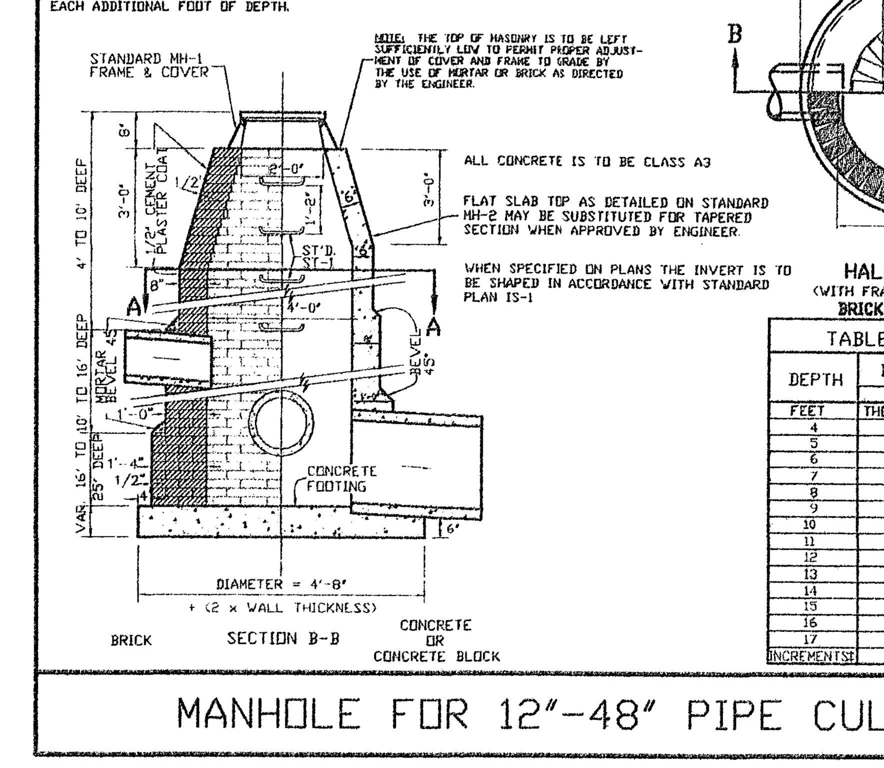

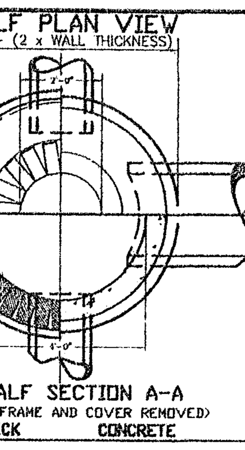

HALF SECTION A–A
(WITH FRAME AND COVER REMOVED)
BRICK CONCRETE

TABLE OF QUANTITIES *			
DEPTH	BRICK MANHOLE: BRICK	BRICK MANHOLE: CONCRETE	CONCRETE MANHOLE: CONCRETE
FEET	THOUSANDS	CU. YARDS	CU. YARDS
4	0.5	0.785	1.437
5	0.7	0.785	1.699
6	0.9	0.785	1.961
7	1.0	0.785	2.223
8	1.2	0.785	2.485
9	1.4	0.785	2.747
10	1.6	0.785	3.009
11	1.9	0.970	3.455
12	2.2	0.970	3.817
13	2.5	0.970	4.179
14	2.8	0.970	4.541
15	3.1	0.970	4.903
16	3.4	0.970	5.265
17	4.0	1.173	6.032
INCREMENTS‡	0.45	—	0.582

MANHOLE FOR 12"–48" PIPE CULVERTS

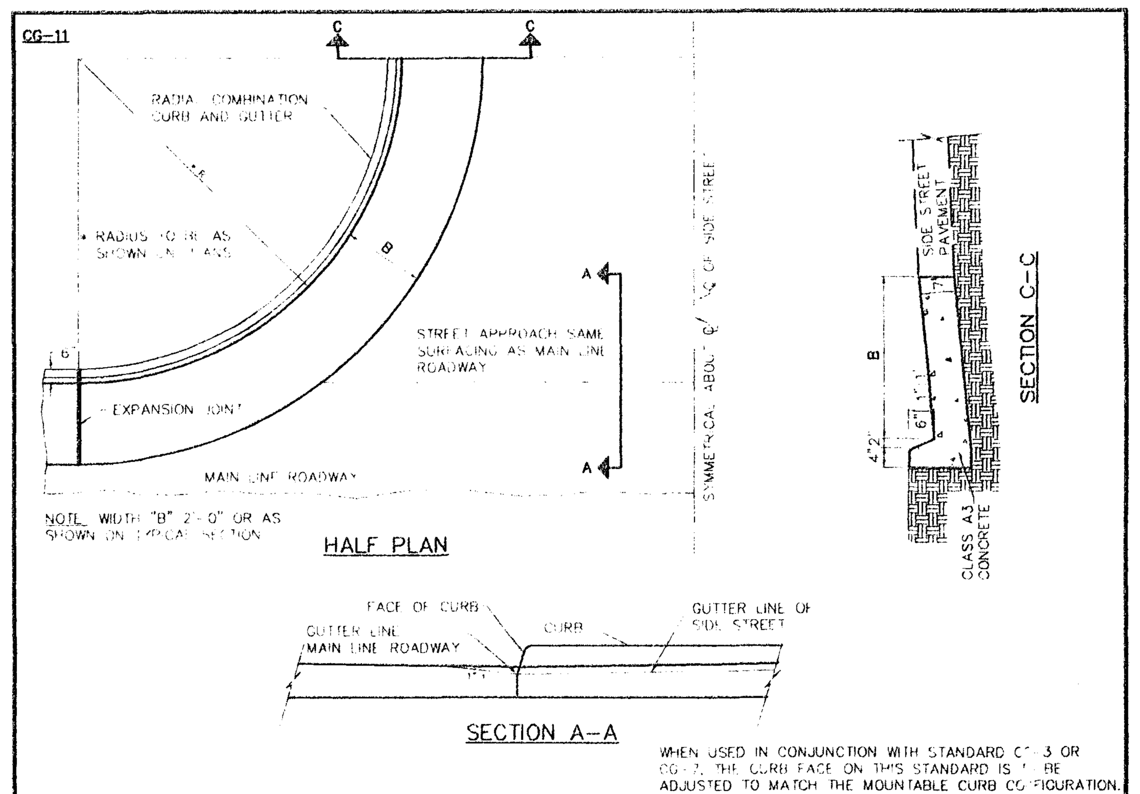

WHEN USED IN CONJUNCTION WITH STANDARD CG–3 OR CG–7, THE CURB FACE ON THIS STANDARD IS TO BE ADJUSTED TO MATCH THE MOUNTABLE CURB CONFIGURATION.

STANDARD CONNECTION FOR STREET INTERSECTIONS

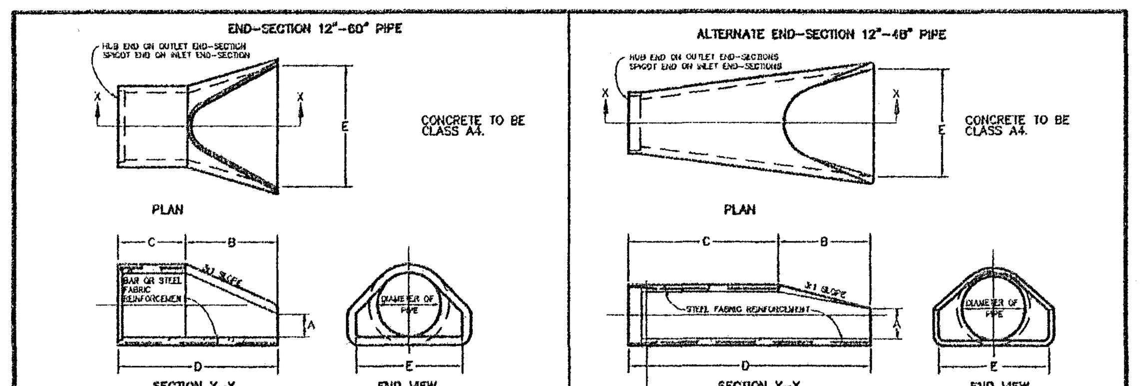

END–SECTION DIMENSIONS					
DIAM.	A	B	C	D	E
12"	4"	2'–0"	2'–0"	4'–0"	2'–0"
15"	6"	2'–3"	1'–9"	4'–0"	2'–6"
18"	9"	2'–3"	1'–9"	4'–0"	3'–0"
24"	9–1/2"	3'–7"	2'–6"	6'–1"	4'–0"
30"	1'–0"	4'–6"	1'–7–3/4"	6'–1–3/4"	5'–0"
36"	1'–3"	5'–3"	2'–10–3/4"	6'–1–3/4"	6'–0"
42"	1'–9"	5'–3"	2'–11"	6'–2"	6'–6"
48"	2'–0"	6'–0"	2'–2"	6'–2"	7'–0"
54"	2'–3"	6'–5"	2'–9–1/4"	6'–2–1/4"	7'–6"
60"	2'–11"	5'–0"	3'–3"	6'–3"	8'–0"

END–SECTION DIMENSIONS					
DIAM.	A	B	C	D	E
12"	4"	2'–0"	4'–1"	6'–1"	2'–0"
15"	6"	2'–3"	5'–10"	6'–1"	2'–6"
18"	9"	2'–3"	3'–10"	6'–1"	3'–0"
24"	10"	3'–7"	2'–6"	6'–3"	4'–0"
30"	1'–0"	4'–6"	1'–7–3/4"	6'–1–3/4"	5'–0"
36"	1'–3"	5'–3"	2'–10–3/4"	6'–1–3/4"	6'–0"
42"	1'–9"	5'–3"	2'–11"	6'–2"	6'–6"
48"	2'–0"	6'–0"	2'–2"	6'–2"	7'–0"

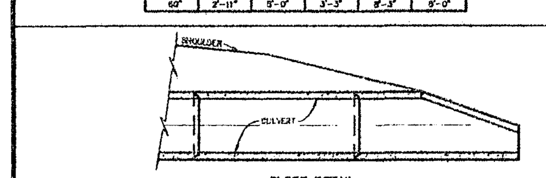

SLOPE DETAIL

NOTE: PIPE LENGTHS SHOWN ON PLANS ARE BASED ON END–SECTION DESIGN SHOWN ON THE LEFT. IF THE CONTRACTOR ELECTS TO USE THE ALTERNATE DESIGN SHOWN ON THE RIGHT, LENGHTS WILL BE REDUCED BY THE DIFFERENCE IN DIMENSION "D".

FLARED END–SECTIONS FOR CONCRETE PIPE CULVERTS (ES–1)

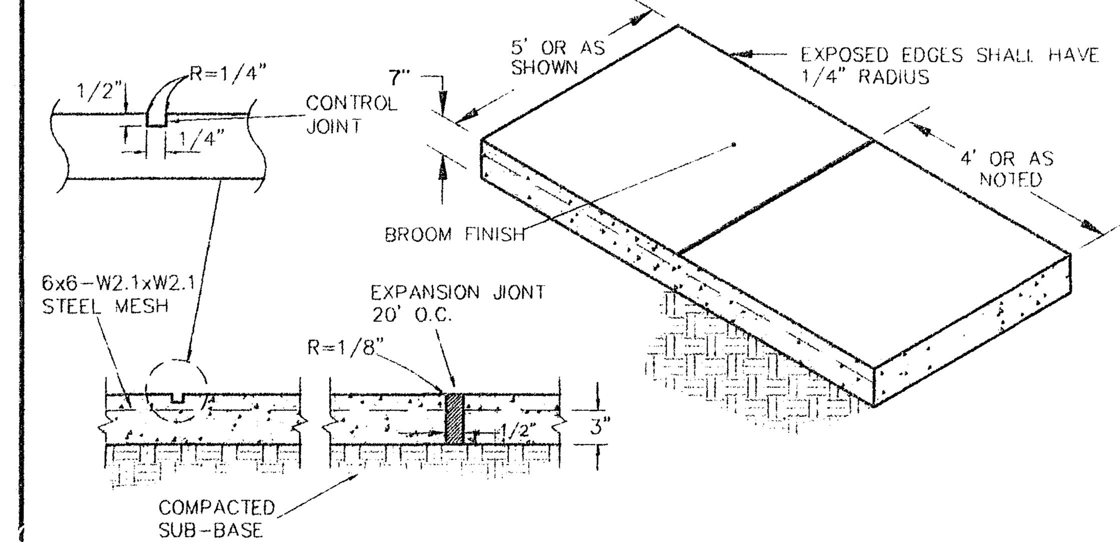

NOTES:

1. SIDEWALKS SHALL ONLY BE CUT AT EXISTING CONTROL JOINTS.
2. BASE UNDER CONCRETE SHALL BE RESTORED AND COMPACTED UNDER SIDEWALK.

SIDEWALK DETAIL

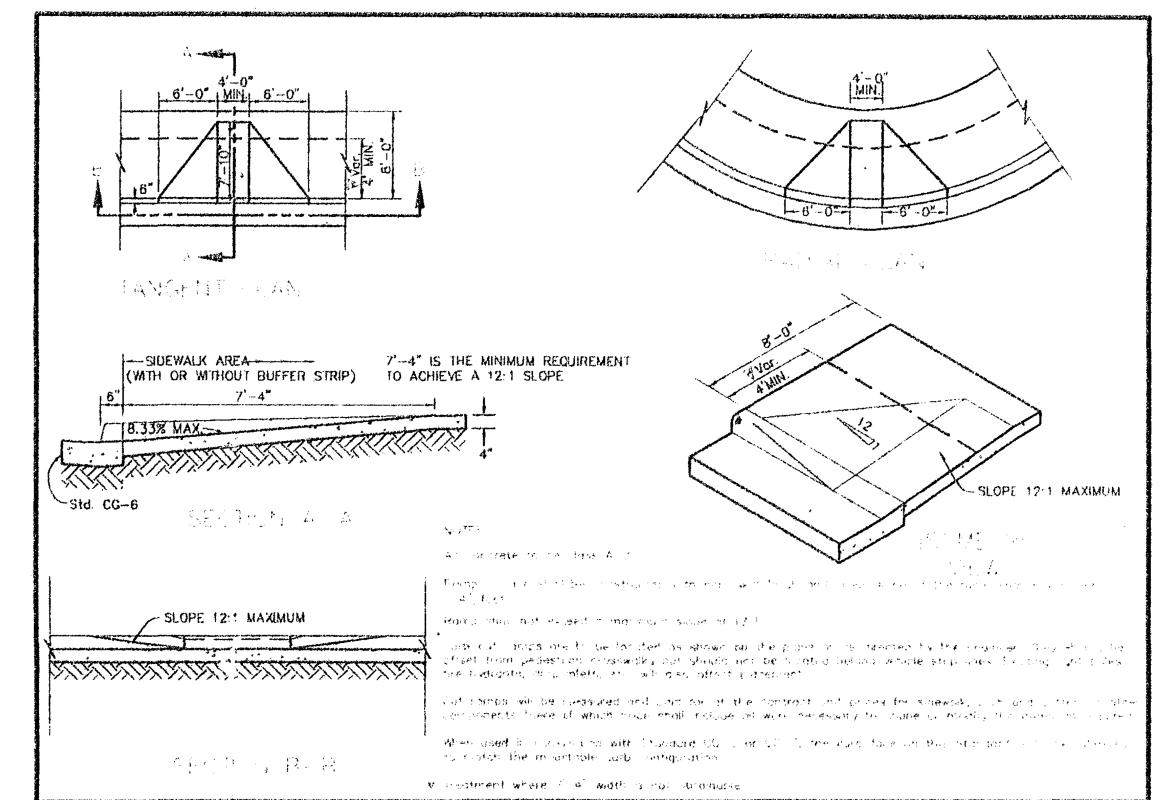

CURB CUT RAMP
(FACILITY FOR PHYSICALLY HANDICAPPED)

NO PROJECTION OF PIPE ABOVE GROUND LINE

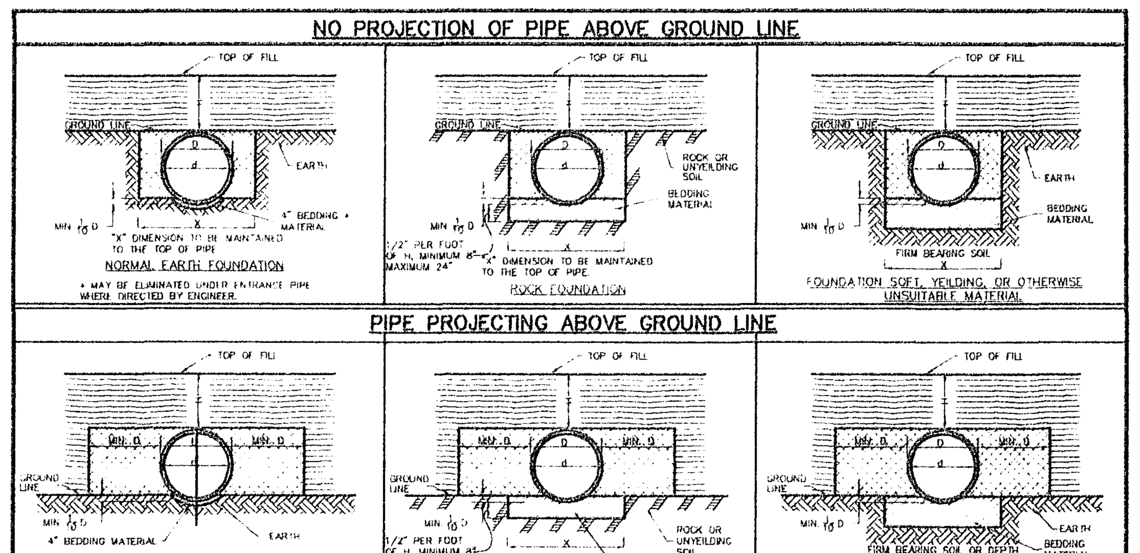

CULVERTS LESS THAN d = 36"
X = D + 12" MINIMUM
D + 24" MAXIMUM
CULVERTS WHERE d = 36" AND OVER
X = D + 36"
METHOD "A" PIPE BEDDING SHALL BE USED AS FOLLOWS UNLESS OTHERWISE NOTED ON PLANS
RIGID PIPE
FILLS UP TO 30' (NO PROJECTION OF PIPE ABOVE GROUND LINE

FILLS UP TO 30' (PIPE PROJECTION ABOVE GROUND LINE)
FLEXIBLE PIPE
AS SHOWN ON TABLES
H – HEIGHT OF COVER MEASURED FROM TOP OF DRAINAGE STRUCTURE TO FINISHED GRADE.
BEDDING MATERIAL IN ACCORDANCE WITH SECTION 302.02 OF THE ROAD AND BRIDGE SPECIFICATIONS
BACKFILL MATERIAL IN ACCORDANCE WITH SECTION 302.07 OF THE ROAD AND BRIDGE SPECIFICATIONS
EMBANKMENT
BEDDING MATERIAL REQUIREMENTS DETAILED UNDER METHOD A, PROJECTING CONDITIONS, ARE APPLICABLE TO METHOD B1 AND B2.

INSTALLATION OF PIPE CULVERTS AND STORM SEWERS
PIPE BEDDING – METHOD "A" (FILLS UP TO 30')

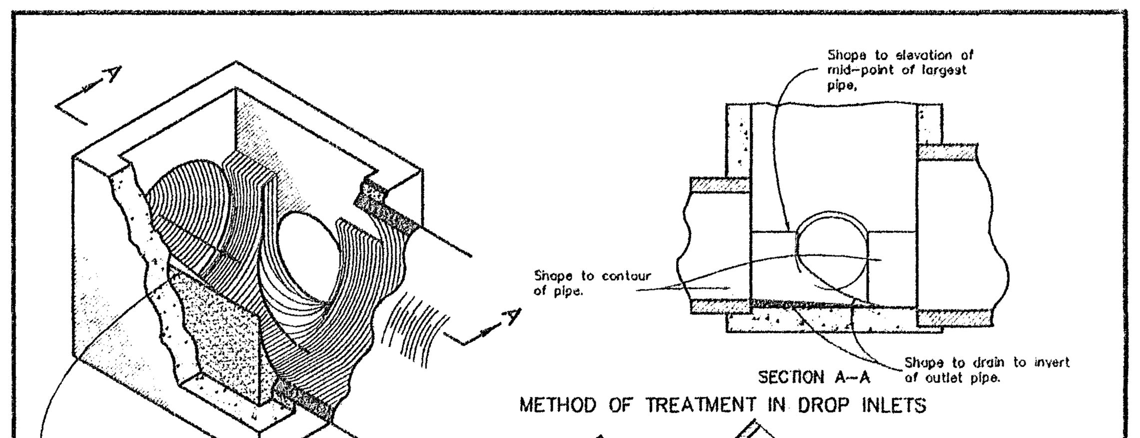

NOTES:

Shaping of manhole and inlet inverts in accordance with this drawing is to apply to those structures specified on plans or where invert of pipe is above invert of structure.

Manhole or drop inlet is to be formed and constructed in accordance with applicable standard or special drawing. The invert shaping as detailed hereon is to consist of a Portland Concrete mix conforming to Class A3 or Class C1, except that 25% of coarse aggregate may be up to 4" in diameter and consist of stone, broken brick, broken concrete, or broken concrete block. The surface shall be left smooth by means of hand troweling. None of the coarse aggregate shall remain exposed.

Details of invert shaping as shown hereon are for example purposes only. Each manhole or drop inlet is to be shaped individually to best fit the particular inlet and outlet configuration and flow lines.

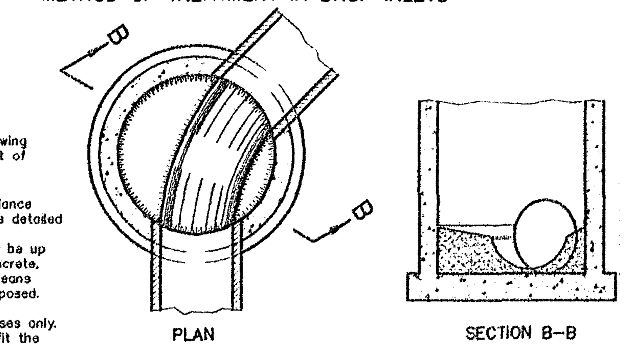

METHOD OF TREATMENT IN MANHOLES

STANDARD METHOD OF SHAPING MANHOLE & INLET INVERTS
IS–1

DI–3AA–3BB–3CC

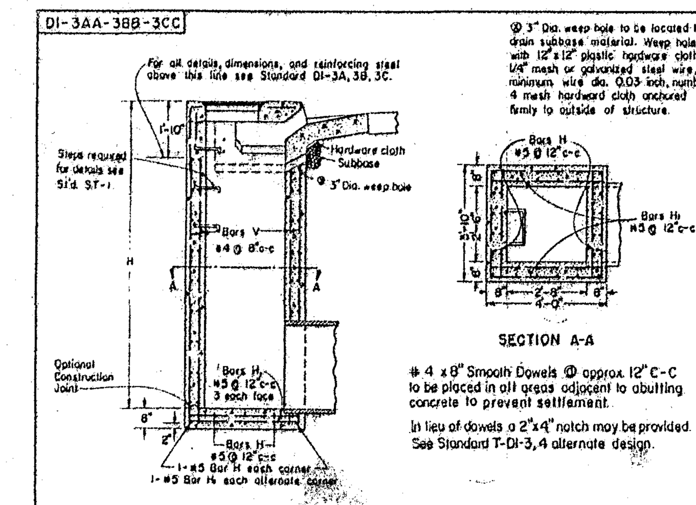

(1) 3" Dia. weep hole to be located to drain subbase material. Weep hole with 12"x12" plastic hardware cloth 1/4" mesh or galvanized steel wire, minimum wire dia. 0.03 inch, number 4 mesh hardward cloth anchored firmly to outside of structure.

4 x 8" Smooth Dowels @ approx. 12" C–C to be placed in all areas adjacent to abutting concrete to prevent settlement.

In lieu of dowels a 2"x4" notch may be provided. See Standard T–DI–3,4 alternate design.

NOTES

All cast in place concrete to be Class A3. For acceptable alternate see Precast Standard Designs.

Minimum depth (H) to be 8'–0". Maximum depth to be 20'–0". For inlets less than 8' use St'd. DI–3A, 3B, 3C.

Length of slot (L) will, in all cases, be shown on plans.

When inlet is used in 4' median, back of inlet is to be shaped to conform with proposed curb.

For plan view of inlet see St'd. DI–3A, 3B, 3C.

If optional construction joint is used it is to be keyed. All splices in Bars V to be a minimum of 40d (20").

When specified on plans invert is to be shaped in accordance with Standard Plan IS–1.

This item may be precast or cast in place

See St'd. SL–1 for applicability of safety slabs.

TYPE	APPROXIMATE QUANTITIES FOR MINIMUM 8' DEPTH INLET: DIMENSION L *	REINFORCING STEEL	CONCRETE	INCREMENTS TO BE ADDED FOR EACH ADDITIONAL FOOT OF DEPTH (H) AND/OR SLOT LENGTH (L): H Cu. Yds. Conc.	H Lbs. Steel	L Cu. Yds. Conc.	L Lbs. Steel
DI–	Lin. Ft.	Lbs.	Cu. Yds.				
3AA	2'–6"	452	3.14	0.317	54	—	—
3BB	4'–0"	494	3.47	0.317	54	0.22	23.5
3CC	6'–0"	541	3.89	0.317	54	0.22	23.5

SCHEDULE OF REINFORCING STEEL**					
BARS H NO. REQ'D.	BARS H LENGTH	BARS H₁ NO. REQ'D.	BARS H₁ LENGTH	BARS V NO. REQ'D.	BARS V LENGTH
4x(H+1)	3'–6"	4x(H+1)	3'–8"	36	H–1'–4"

In the event the invert of the outfall pipe is higher than the bottom of the structure, the invert of the structure shall be shaped with cement mortar to prevent standing or ponding of water in the structure.

The "H" dimension shown on the Standards and specified on the plans will be measured from the invert of the outfall pipe to the top of the structure. Plan "H" dimensions are approximate only for estimating purposes and the actual dimensions shall be determined by the contractor from field conditions.

* For description and location of dimension L see sheet 104.09.

** For number of Bars A–G required and lengths see sheet 104.10.

Quantities shown are for minimum inlets of each type. For inlets of greater depth (H) or longer slots (L) increments shown per foot must be added.

The amount of concrete and steel displaced by pipes must be deducted to obtain true quantities.

STANDARD CURB DROP INLET
12"–30" PIPE DEPTH (H) 8' TO 20'
VIRGINIA DEPARTMENT TRANSPORTATION

SPECIFICATION REFERENCE 233 302

104.11

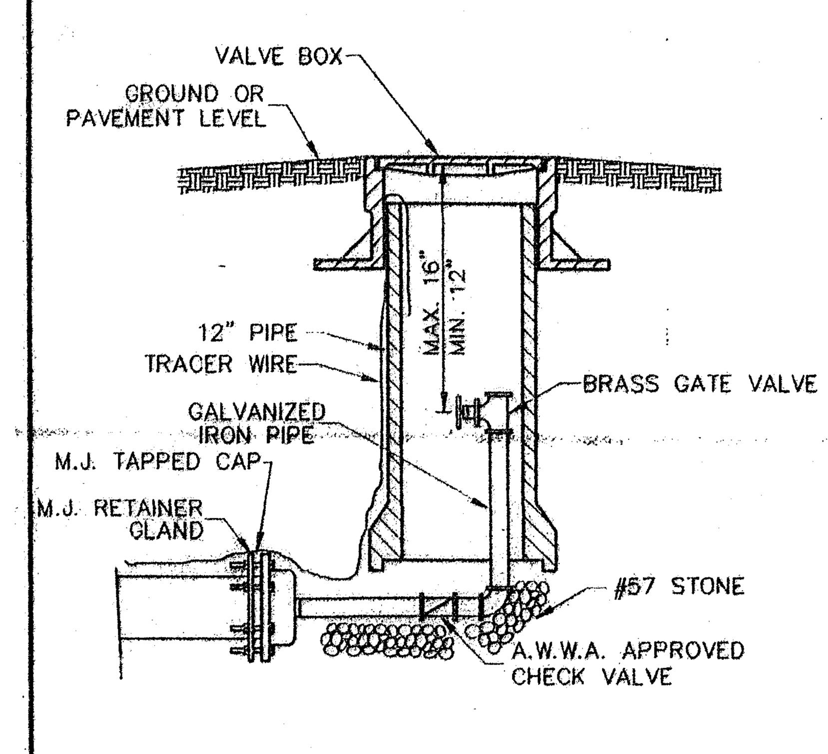

NOTE:
1. 2" MATERIAL TO BE USED ON ALL MAINS.
2. RESTRAINED JOINTS AS SHOWN ON APPROVED PLANS.

DEAD–END BLOW–OFF

ROAD CONSTRUCTION NOTES

1. THE ROAD CONTRACTOR SHALL BE RESPONSIBLE FOR COORDINATING ALL ITEMS ON ROAD WORK AND DRAINAGE WITH EXISTING AND PROPOSED UNDERGROUND UTILITIES (POWER, WATER, SEWER AND TELEPHONE) SUCH THAT NO DUPLICATION OF WORK EFFORT IS INCURRED.
2. UPON COMPLETION, INSPECTION AND ACCEPTANCE, ALL ROADS AND DRAINAGE FACILITIES SHALL BE DEDICATED TO THE VIRGINIA DEPARTMENT OF TRANSPORTATION FOR INCLUSION IN THE STATE SECONDARY ROAD SYSTEM.
3. ALL ITEMS OR ROADWORK AND DRAINAGE NECESSARY FOR THE ROADS TO BE ACCEPTED INTO THE STATE SECONDARY ROAD SYSTEM, WHETHER WRITTEN ON THESE PLANS OR NOT ARE HEREBY EXPRESSLY IMPLIED. NO OMISSIONS, ERRORS OR OVERSIGHT ON THE PART OF THE ENGINEER OR OWNER SHALL DETRACT FROM THE CONTRACTORS RESPONSIBILITY OF COMPLETING ALL ITEMS OR ROADWORK AND DRAINAGE SATISFACTORY IN EVERY RESPECT TO THE CITY/COUNTY AND THE VIRGINIA DEPARTMENT OF TRANSPORTATION.
4. ALL EROSION AND SEDIMENT CONTROL MEASURES SHALL BE THE RESPONSIBILITY OF THE ROAD CONTRACTOR.
5. LATERAL UNDERDRAINS MAY BE REQUIRED WHERE FIELD CONDITIONS WARRANT. A CHANGE ORDER FOR SAME WILL BE EXECUTED IF REQUIRED BY V.D.O.T., THE ENGINEER, COUNTY OR OWNER.

Rickmond Engineering, Inc.
1643–C Merrimac Trail
Williamsburg VA 23185
(757)229–1776
Civil Engineering
Environmental Engineering
Land Surveying

Designed By:	Drawn By:	Scale:	Date:	Job No.:	File Name:
KMJ	KMJ	AS NOTED	6/26/98	98161	98161DS

COMMONWEALTH OF VIRGINIA
K.M. JENKINS II
No. 022872
10/26/98
PROFESSIONAL ENGINEER

No.	By	Revision	App.	Date

THE VILLAGES AT WESTMINSTER PHASE V
DETAIL SHEET
JAMES CITY COUNTY VIRGINIA

Job Number	Sheet No.
98161	C10

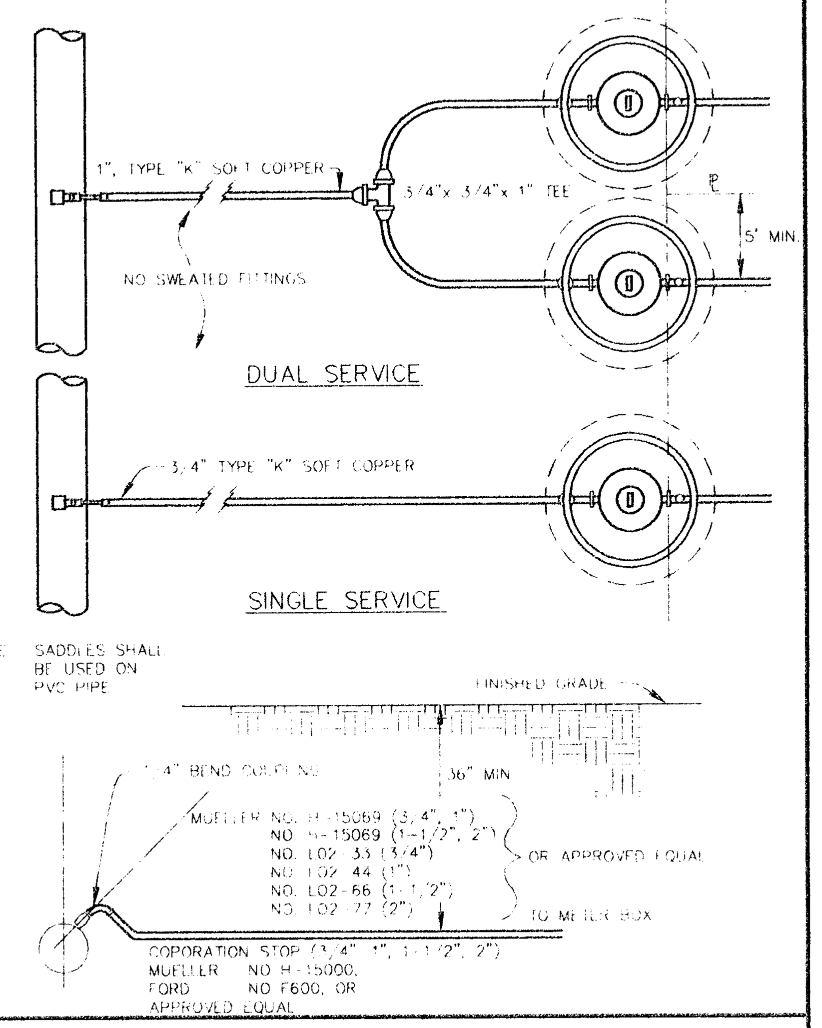

DUAL & SINGLE SERVICE INSTALLATION

BEND		6"	8"	10"	12"	18"	20"	24"	30"	36"
1/64	A						1'-8"	2'-0"	2'-6"	3'-0"
	B						10"	1'-0"	1'-3"	1'-6"
	C						10"	1'-0"	1'-1"	1'-8"
1/32	A	6"	8"	10"	1'-0"	1'-4"	1'-8"	2'-0"	2'-6"	3'-0"
	B	7"	8"	9"	10"	1'-0"	1'-2"	1'-4"	1'-7"	1'-11"
	C	7"	7"	8"	8"	9"	10"	1'-0"	1'-1"	1'-2"
1/16	A	9"	1'-0"	1'-6"	1'-9"	2'-3"	3'-0"	3'-6"	4'-2"	5'-4"
	B	7"	8"	9"	10"	1'-0"	1'-2"	1'-4"	1'-7"	2'-0"
	C	8"	9"	10"	11"	1'-2"	1'-4"	1'-4"	1'-9"	2'-0"
1/8	A	1'-3"	1'-8"	2'-1"	2'-6"	3'-4"	4'-2"	5'-0"	6'-3"	7'-0"
	B	7"	8"	9"	11"	1'-3"	1'-6"	1'-8"	2'-0"	2'-6"
	C	8"	9"	10"	11"	1'-2"	1'-4"	1'-9"	2'-3"	2'-8"
1/4	A		2'-3"		3'-6"					
	B		9"		12"					
	C		9"		12"					

NOTES:
1. ALL CONCRETE TO BE 3000 PSI
2. BUTTRESS DIMENSIONS SHOWN ARE MINIMUM. DIMENSIONS ARE BASED UPON SOIL BEARING PRESSURE OF 3000 PSF AND STATIC WATER PRESSURE OF 150 PSL.

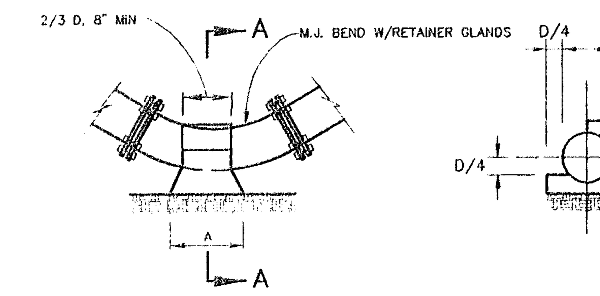

BUTTRESS FOR HORIZONTAL BENDS

HYDRANT TO BE PLUMB

A.W.W.A. APPROVED BREAK-AWAY HYDRANT WITH (2) 2-1/2" HOSE CONNECTIONS AND (1) 4-1/2" STREAMER CONNECTION, WITH NATIONAL STANDARD THREADS.

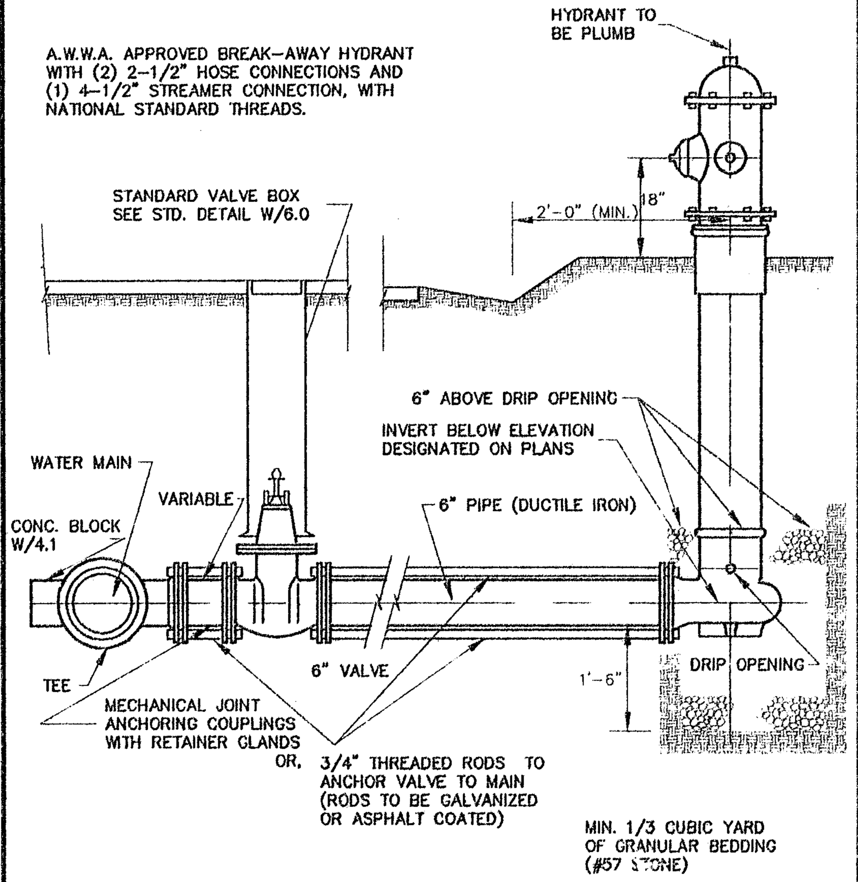

NOTE:
HYDRANTS TO BE LOCATED AS APPROVED BY THE FIRE DEPARTMENT.

FIRE HYDRANT SETTING

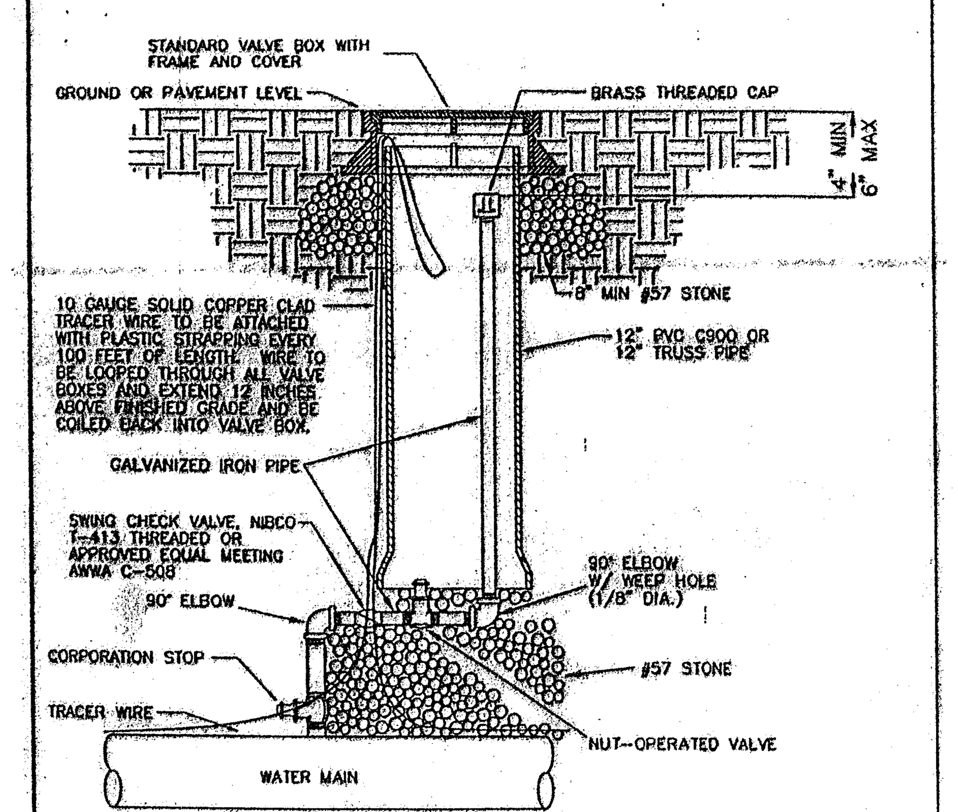

NOTES
1 2" GALVANIZED IRON PIPE AND FITTINGS SHALL BE USED FOR MANUAL AIR RELEASE VALVE.
2 TAPPING SADDLES AS MANUFACTURED BY FORD METER BOX CO., INC., MODEL FC202 OR APPROVED EQUAL SHALL BE USED ON PVC PIPE. DUCTILE IRON PIPE MAY BE DIRECTLY TAPPED.
3 CORPORATION STOP SHALL BE FORD METER BOX CO., INC., MODEL FB1600, A.Y. McDONALD MFD., CO. MODEL 3148B OR APPROVED EQUAL.

JCSA
MANUAL AIR RELEASE VALVE

PLATE: W8-0	SCALE: NONE
DWN BY: RED	DATE: 12-4-95

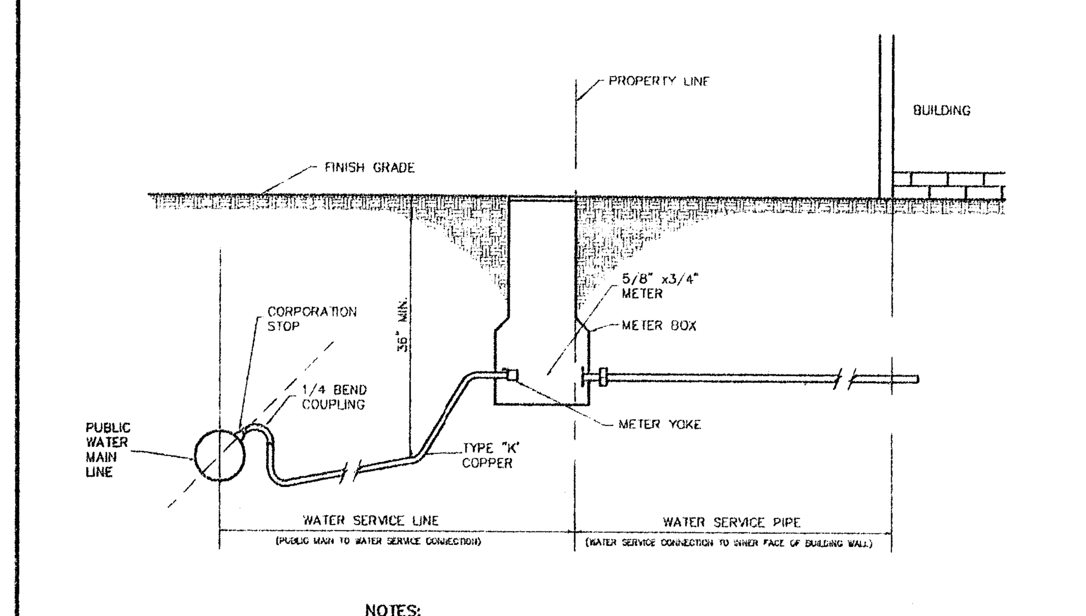

NOTES:
1. SADDLES SHALL BE USED ON PVC PIPE.
2. METER YOKE TO BE 16" TO 22" BELOW GRADE.

TYPICAL WATER SERVICE

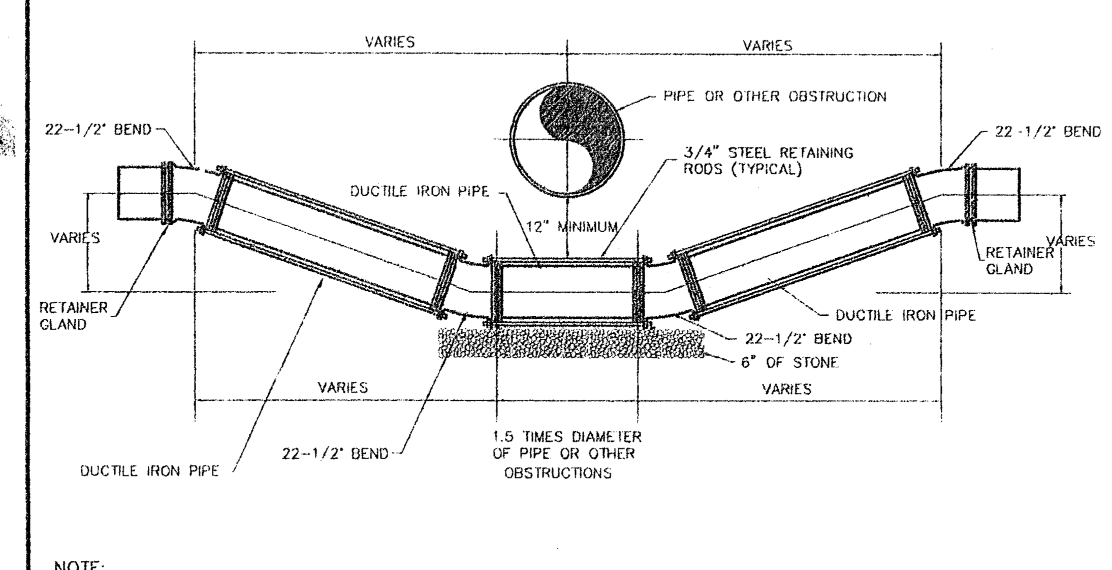

NOTE:
DETAILS ON OFFSETS TO BE NOTED ON PLANS.
NON-UNIFORM OFFSETS REQUIRES SPECIAL DESIGN.

OBSTRUCTION BY-PASS
UNIFORM OFFSET

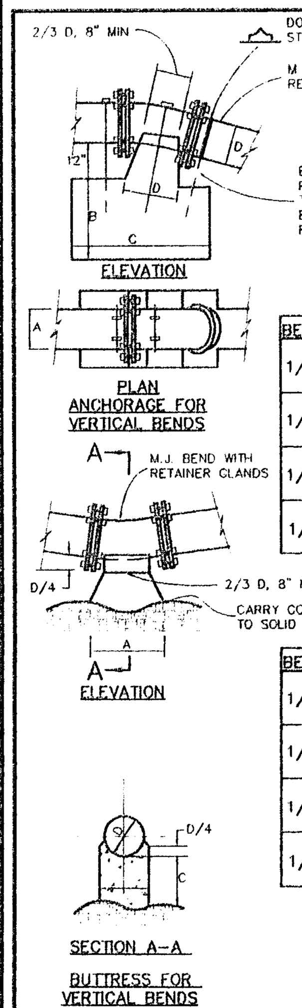

EMBED BARS 30 DIAMETERS PAINT EXPOSED BARS WITH TWO COATS OF APPROVED BITUMINOUS PAINT SEE TABLE FOR BAR SIZE

SIZE	1/64	1/32	1/16	1/8
6"		3-#6	3-#6	3-#6
8"		3-#6	3-#6	3-#6
10"		3-#6	3-#6	3-#6
12"		3-#6	3-#6	3-#6
16"		3-#6	3-#6	3-#6
20"	3-#6	3-#6	3-#6	4-#6
24"	3-#6	3-#6	3-#6	5-#6
30"	3-#6	3-#6	5-#6	5-#7
36"	3-#6	4-#6	5-#7	6-#7

BEND		6"	8"	10"	12"	18"	20"	24"	30"	36"
1/64	A						2'-2"	2'-6"	3'-6"	3'-6"
	B						2'-0"	2'-6"	2'-6"	3'-0"
	C						4'-6"	4'-6"	5'-0"	5'-0"
1/32	A	1'-6"	1'-6"	1'-5"	3'-0"	3'-6"	4'-0"	4'-3"	4'-6"	5'-0"
	B	1'-3"	1'-9"	1'-3"	2'-0"	2'-0"	2'-6"	2'-6"	2'-8"	4'-0"
	C	2'-0"	2'-6"	2'-9"	3'-0"	4'-0"	5'-0"	5'-9"	6'-6"	7'-0"
1/16	A	2'-0"	3'-4"	3'-8"	4'-0"	4'-4"	4'-8"	5'-0"	5'-4"	6'-0"
	B	1'-9"	2'-3"	2'-6"	2'-6"	2'-6"	2'-8"	3'-8"	4'-6"	5'-6"
	C	2'-6"	2'-8"	3'-10"	4'-0"	5'-6"	7'-6"	8'-6"	8'-6"	10'-1"
1/8	A	2'-6"	3'-0"	4'-0"	4'-6"	5'-2"	5'-6"	6'-0"	6'-6"	7'-6"
	B	2'-6"	2'-9"	3'-0"	3'-6"	4'-0"	4'-6"	5'-6"	6'-0"	6'-6"
	C	3'-0"	4'-0"	4'-6"	4'-9"	6'-6"	8'-6"	9'-6"	11'-0"	11'-6"

BEND		6"	8"	10"	12"	18"	20"	24"	30"	36"
1/64	A						1'-8"	2'-0"	2'-6"	3'-0"
	B						10"	1'-0"	1'-3"	1'-6"
	C						10"	1'-0"	1'-1"	1'-8"
1/32	A	6"	8"	10"	1'-0"	1'-4"	1'-8"	2'-0"	2'-6"	3'-0"
	B	7"	8"	9"	10"	1'-0"	1'-2"	1'-4"	1'-7"	1'-11"
	C	7"	7"	8"	8"	9"	10"	1'-0"	1'-1"	1'-2"
1/16	A	9"	1'-0"	1'-6"	1'-9"	2'-3"	3'-0"	3'-6"	4'-2"	5'-4"
	B	7"	8"	9"	10"	1'-0"	1'-2"	1'-4"	1'-7"	2'-0"
	C	8"	9"	10"	11"	1'-2"	1'-4"	1'-4"	1'-9"	2'-0"
1/8	A	1'-3"	1'-8"	2'-1"	2'-6"	3'-4"	4'-2"	5'-0"	6'-3"	7'-0"
	B	7"	8"	9"	11"	1'-3"	1'-6"	1'-8"	2'-0"	2'-6"
	C	8"	9"	10"	11"	1'-2"	1'-4"	1'-9"	2'-3"	2'-8"

NOTES:
1. ALL CONCRETE TO BE 3000 PSI.
2. BUTTRESS DIMENSIONS SHOWN ARE MINIMUM. DIMENSIONS ARE BASED ON SOIL BEARING PRESSURE OF 3000 PSI AND STATIC WATER PRESSURE IS LESS THAN 3000 PSF SPECIAL BUTTRESS DESIGN IS REQUIRED.

BUTTRESSES & ANCHORAGES FOR VERTICAL BENDS

NOTES.
1. CAST IRON HOUSING SHALL BE USED FOR CRESCENT BOXES.
2. THE INLET VALVE SHALL BE BRASS IN ACCORDANCE WITH AWWA C800-84.
3. METER SETTING IS TO BE FOR A MIN. RESIDENTIAL 5/8" x 3/4" METER AND UP TO A 1" METER.

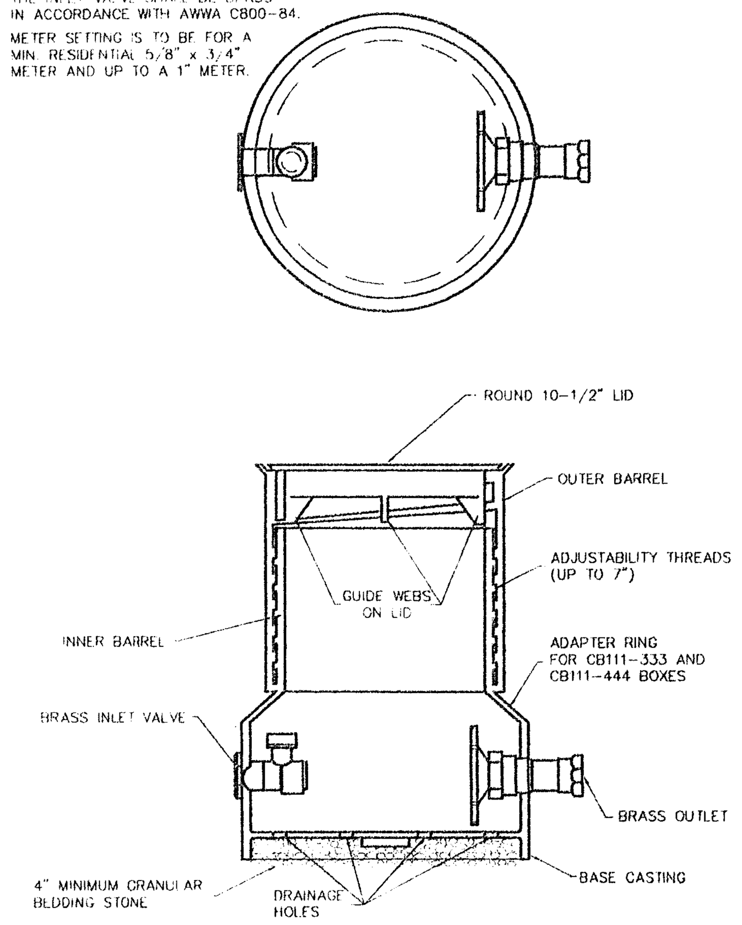

RESIDENTIAL METER SETTING CRESCENT BOX 5/8" TO 1"

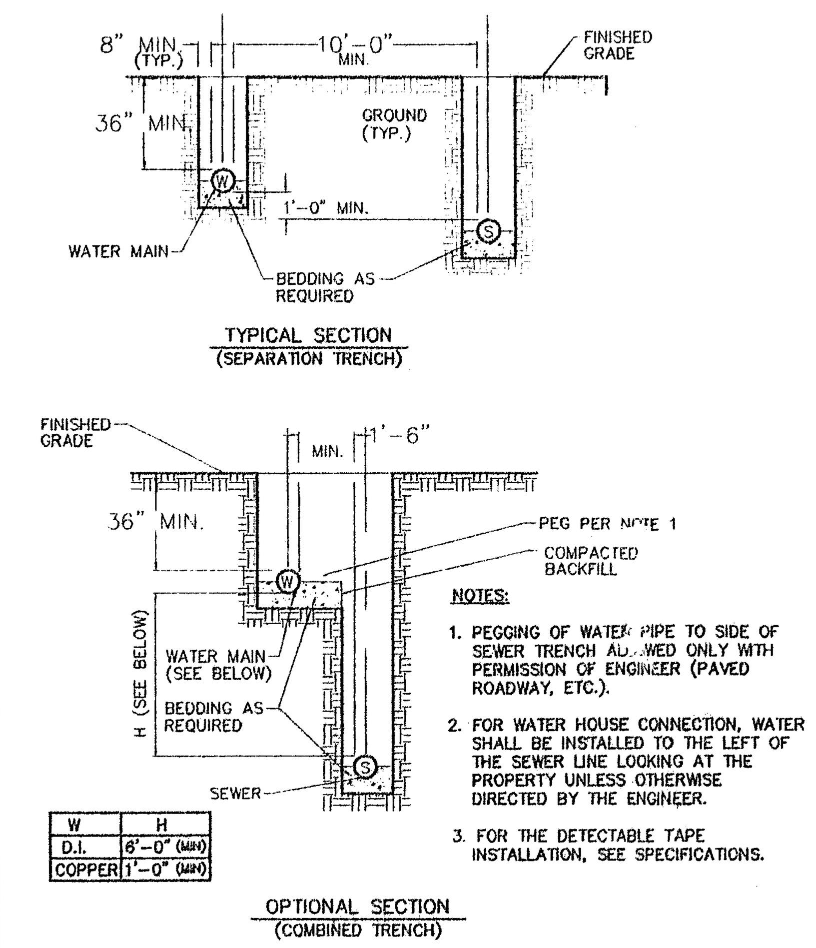

NOTES:
1. PEGGING OF WATER PIPE TO SIDE OF SEWER TRENCH ALLOWED ONLY WITH PERMISSION OF ENGINEER (PAVED ROADWAY, ETC.).
2. FOR WATER HOUSE CONNECTION, WATER SHALL BE INSTALLED TO THE LEFT OF THE SEWER LINE LOOKING AT THE PROPERTY UNLESS OTHERWISE DIRECTED BY THE ENGINEER.
3. FOR THE DETECTABLE TAPE INSTALLATION, SEE SPECIFICATIONS.

W	H
D.I.	6'-0" (MIN)
COPPER	1'-0" (MIN)

MIN. WATER & SEWER LINE SEPARATION

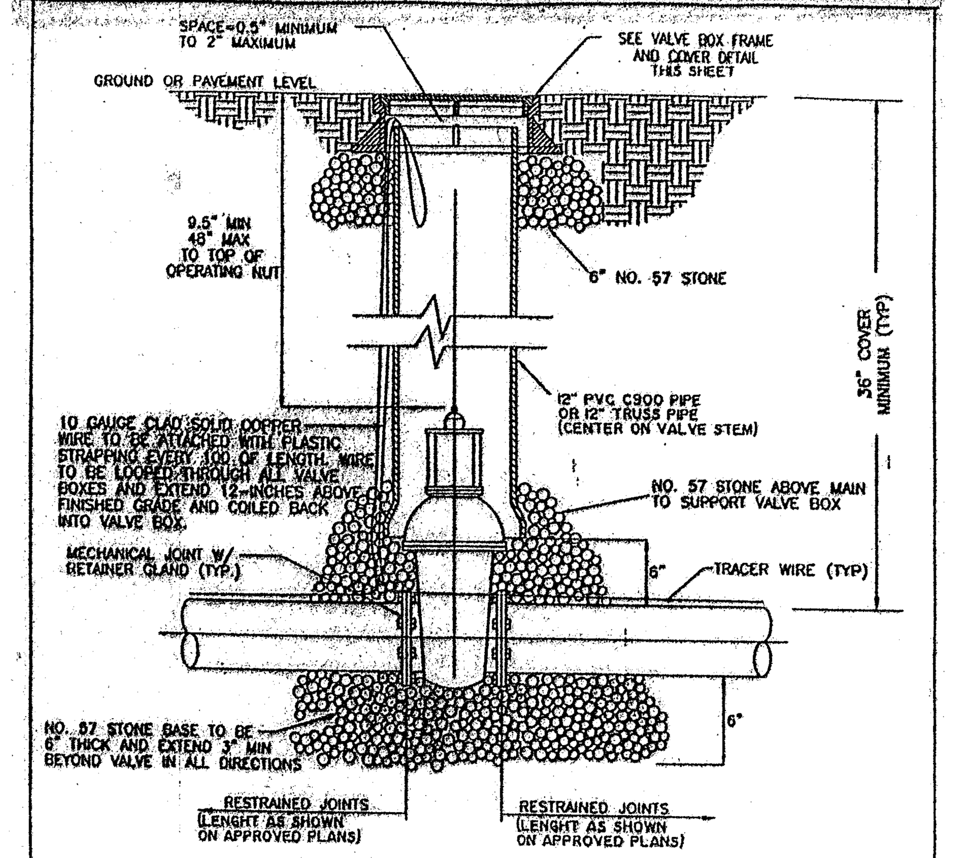

NOTES:
1 IF OPERATING NUT IS GREATER THAN 48" BELOW TOP OF VALVE BOX FRAME, A VALVE STEM EXTENSION SHALL BE INSTALLED. THE EXTENSION SHALL REPLACE OR BE SECURELY ATTACHED TO THE NORMAL 2 INCH SQUARE OPERATING NUT, SHALL BE AT LEAST AS STRONG AS THE VALVE STEM, AND SHALL BE COATED IN ACCORDANCE WITH AWWA C550.

JCSA
TYPICAL VALVE SETTING DETAIL

PLATE: W6-0	SCALE: NONE
DWN BY: RED	DATE: 5/7/96

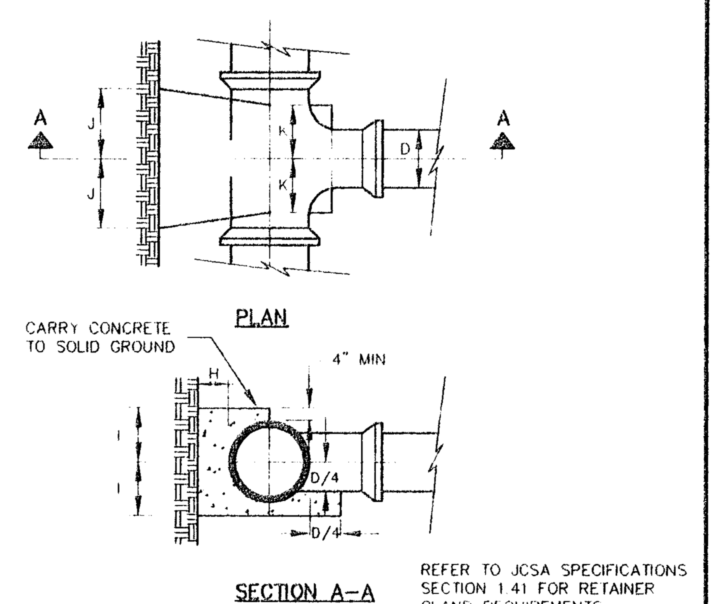

REFER TO JCSA SPECIFICATIONS SECTION 1.41 FOR RETAINER GLAND REQUIREMENTS.

SIZE OF BRANCH									
D	6"	8"	10"	12"	18"	20"	24"	30"	36"
H	8"	9"	10"	1'-0"	1'-2"	1'-4"	1'-6"	1'-9"	2'-0"
I	8"	10"	1'-0"	1'-3"	1'-8"	2'-1"	2'-6"	3'-1"	3'-9"
J	6"	8"	1'-0"	1'-0"	1'-4"	1'-8"	2'-0"	2'-6"	3'-0"
K	6"	8"	8"	8"	10"	1'-2"	1'-4"	1'-6"	1'-0"

1 ALL CONCRETE TO BE 3000 P.S.I.
2 BUTTRESS DIMENSIONS SHOWN ARE MINIMUM DIMENSIONS ARE BASED UPON SOIL BEARING PRESSURE OF 3000 P.S.F. AND STATIC WATER PRESSURE OF 150 P.S.I. WHEN PRESSURE EXCEEDS 150 P.S.I. OR WHERE SOIL BEARING PRESSURE IS LESS THAN 3000 P.S.F. SPECIAL BUTTRESS DESIGN IS REQUIRED

BUTTRESS FOR TEES

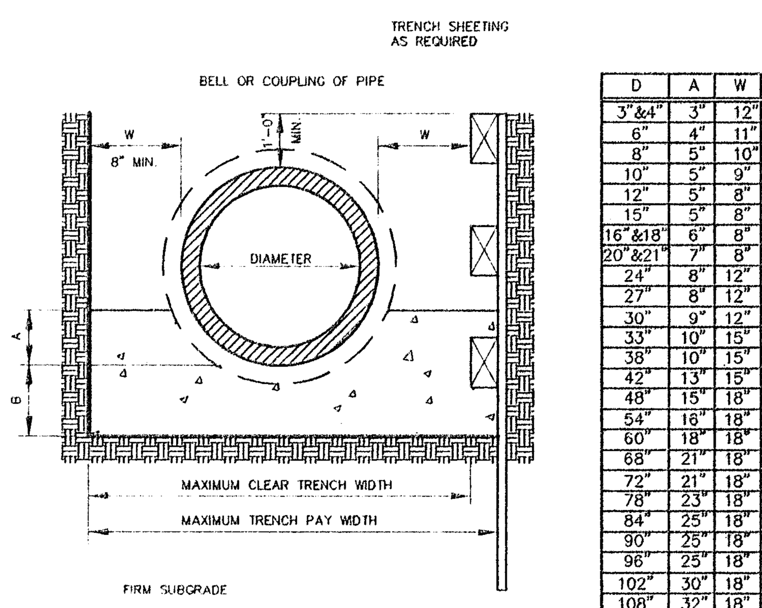

D	A	W	B
3"&4"	3"	12"	6"
6"	4"	11"	6"
8"	5"	10"	6"
10"	5"	9"	6"
12"	5"	8"	6"
15"	5"	8"	6"
16"&18"	6"	8"	6"
20"&21"	7"	8"	6"
24"	8"	12"	6"
27"	8"	12"	6"
30"	9"	12"	6"
33"	10"	15"	6"
38"	10"	15"	6"
42"	13"	15"	6"
48"	15"	18"	6"
54"	16"	18"	6"
60"	18"	18"	6"
68"	21"	18"	6"
72"	21"	18"	6"
78"	23"	18"	6"
84"	25"	18"	6"
90"	25"	18"	6"
96"	25"	18"	12"
102"	30"	18"	12"
108"	32"	18"	12"
114"	34"	24"	12"
120"	36"	24"	12"

WHERE SPECIFICALLY REQUIRED, f'c = 2000 PSI @ 28 DAYS. CONCRETE AND SADDLE BLOCKS SHALL BE USED IN LIEU OF THE GRAVEL CRADLE.

THE GRANULAR MATERIALS FOR BEDDING SHALL BE (ASTM C33 67) WASHED GRAVEL OR CRUSHED STONE FO 90" AND SMALLER.

MAXIMUM CLEAR TRENCH WIDTH SHALL BE 2W PLUS THE OUTSIDE DIAMETER OF THE PIPE.

ELLIPTICAL PIPE SHALL BE BEDDED IN SAND. SEE CONTRACT DRAWINGS FOR AMMOUNT OF BEDDING REQUIRED.

BEDDING AND TRENCH WIDTHS

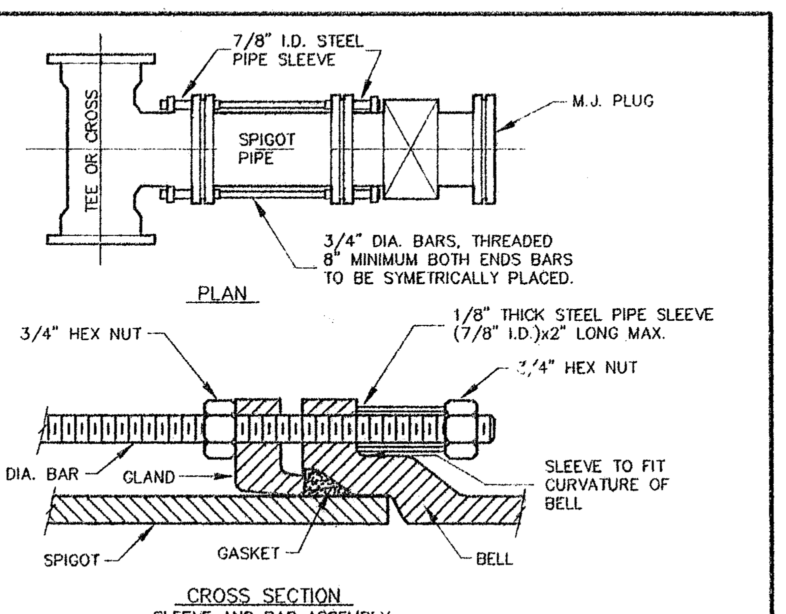

NUMBER OF 3/4" ϕ BARS REQUIRED	MAX. LENGTH OF SPIGOT PIPE
2	24"
2	24"
2	27"
2	27"
4	27"
6	27"
8	36"
12	36"
16	36"
20	42"

NOTES:
1. USE MECHANICAL JOINT FITTINGS ONLY
2. FOR ALTERNATIVE METHOD OF STRAPPING VALVE TO MAIN SEE DETAIL B/2.3. APPLY TWO COATS OF BITUMINOUS PAINT TO BARS AND APPURTENANCES.
3. FOR 24" AND LARGER D.I. PIPE, CONTRACTOR MAY SUBSTITUTE WELDED ON BOSS FOR TEE OR CROSS. SEE DETAIL B/2.6.

METHOD FOR STRAPPING VALVE TO MAIN

THRUST RESTRAINT DESIGN
SUMMARY OF CALCULATIONS

RICKMOND ENGINEERING, INC
98161
KMJ

DATE: 12-21-1998

NOTE:
VILLAGES AT WESTMINSTER
PHASE V

SIZE, TYPE, FITTING	SOIL/BEDDING TRENCH TYPE	T.PRESSURE/S.FACTOR & DEPTH OF BURY	RESTRAINED LENGTH(S)
PVC TEE 8" RUN x 8" BRANCH	CH/GRANULAR TRENCH TYPE 5	70 PSI TEST/1.5 S.F. 3' D.O.B.	Lrn = 20' Lbr = 0'
PVC TEE 8" RUN x 4" BRANCH	CH/GRANULAR TRENCH TYPE 5	70 PSI TEST/1.5 S.F. 3' D.O.B.	Lrn = 20' Lbr = 0'
4" PVC VALVE/D.END	CH/GRANULAR TRENCH TYPE 5	70 PSI TEST/1.5 S.F. 3' D.O.B.	Lr = 19'
8" PVC VALVE/D.END	CH/GRANULAR TRENCH TYPE 5	70 PSI TEST/1.5 S.F. 3' D.O.B.	Lr = 35'
8x4 PVC REDUCER	CH/GRANULAR TRENCH TYPE 5	70 PSI TEST/1.5 S.F. 3' D.O.B.	L(A) = 49' L(B) = 25'
4" PVC 22.5° H.BEND	CH/GRANULAR TRENCH TYPE 5	70 PSI TEST/1.5 S.F. 3 ' D.O.B.	Lr = 1'
8" PVC 45° H.BEND	CH/GRANULAR TRENCH TYPE 5	70 PSI TEST/1.5 S.F. 3 ' D.O.B.	Lr = 5'
8" PVC 90° H.BEND	CH/GRANULAR TRENCH TYPE 5	70 PSI TEST/1.5 S.F. 3 ' D.O.B.	Lr = 12'

JAMES CITY SERVICE AUTHORITY

GENERAL NOTES - WATER DISTRIBUTION MAINS

1. All components of the water distribution system shall be installed and tested in accordance with the latest edition of the James City Service Authority Standards and Specifications for Water Distribution Systems and the Virginia Waterworks Regulations.
2. The developer's representative shall submit a list of materials for approval to the James City Service Authority prior to commencement of construction.
3. Water mains shall be installed after grading to 6-inch of final grade and prior to placement of base material.
4. All approved Erosion and Sediment Control requirements shall be observed during water main construction.
5. All water mains shall be disinfected and pressure tested, and satisfactory bacteriological samples obtained, in accordance with James City Service Authority standards.
6. After testing is complete and all components of the water system are acceptable to the James City Service Authority, as-built drawings shall be submitted to the Service Authority. No water meters will be installed until as-built drawings are received and checked for accuracy by the James City Service Authority. Any discrepancies noted during the as-built inspection shall be corrected by the developer's representatives within 30 days.
7. Routine periodic inspections during construction will be provided by the James City Service Authority. These inspections do not relieve the developer from his obligation and responsibility for constructing a water distribution system in strict accordance with the Standards and Specifications of the James City Service Authority.
8. Any changes to the final plans shall be approved by the James City Service Authority and shall be accurately indicated on the as-built drawings.
9. All lots shall be provided with water service connections. The connections shall be extended from the main to the property line or easement line, and shall terminate with a yoke in a meter box set at final finished grade. Meters for all lots (units) shall be paid for by the developer or builder and installed by the JCSA.
10. The developer is required to submit water data sheets and shall acquire a certificate to construct prior to commencement of construction.
11. Any required easements, permits and approvals shall be acquired by the developer prior to commencement of water main construction.

Rickmond Engineering, Inc.
1643-C Merrimac Trail
Williamsburg VA 23185
(757)229-1776
Civil Engineering
Environmental Engineering
Land Surveying

Designed By:	Drawn By:	Scale:	Date:	Job No.:	File Name:
KMJ	KMJ	AS NOTED	6/26/98	98161	98161DS

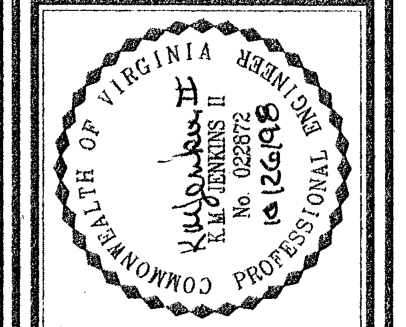

No.	By	Revision	App.	Date

THE VILLAGES AT WESTMINSTER PHASE V
DETAIL SHEET
JAMES CITY COUNTY VIRGINIA

Job Number	Sheet No.
98161	C11

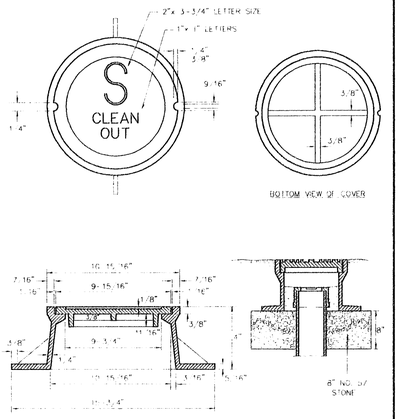

CLEANOUT COVER ASSEMBLY

NOTES:
1. MANHOLE STEPS SHALL HAVE A MINIMUM EMBEDMENT OF 3" AND A MAXIMUM PROJECTION OF 5".
2. BOTTOM STEP SHALL BE A MINIMUM OF 5" AND A MAXIMUM OF 16-1/2" ABOVE WORKING LEVEL.
3. STEPS TO BE SET IN VERTICAL ALIGNMENT.
4. MAXIMUM MANHOLE DEPTH TO BE 24'-0".
5. CONNECTION BETWEEN MANHOLE AND SEWER PIPE TO BE FLEXIBLE GASKET.
6. CONCRETE SHALL BE 4000 psi.
7. EXTENDED BASE IS OPTIONAL.

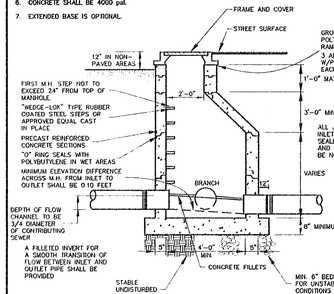

STANDARD MANHOLE

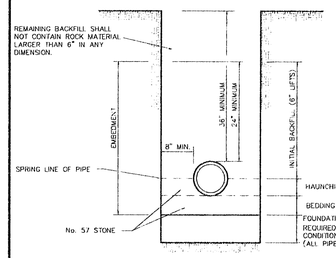

1. OPEN CUTS IN PAVED AREAS SHALL BE BACKFILLED ENTIRELY WITH No. 57 STONE.
2. DUCTILE IRON PIPE MAY BE INSTALLED WITH LIMITED BEDDING AS APPROVED BY JCSA.
3. WHERE ROCK IS ENCOUNTERED DUCTILE IRON PIPE SHALL BE INSTALLED ON A MINIMUM 6" BEDDING OF No. 57 STONE.

* THOROUGHLY COMPACTED BY HAND OR APPROVED MECHANICAL TAMPER.

SEWER TRENCH INSTALLATION

JAMES CITY SERVICE AUTHORITY

GENERAL NOTES - SANITARY SEWER

1. All components of the sanitary sewer system shall be installed and tested in accordance with the latest edition of the James City Service Authority Standards and Specifications for Sanitary Sewer Systems and the Virginia Sewerage Regulations.
2. The developer's representative shall submit a list of materials for approval to the James City Service Authority prior to commencement of construction.
3. Sewer lines shall be installed after rough grading and prior to placement of base material.
4. All approved Erosion and Sediment Control requirements shall be observed during sewer line construction.
5. All sewers shall be mirrored and pressure tested in accordance with James City Service Authority standards.
6. After testing is complete and all components of the sewer system are acceptable to the James City Service Authority, as-built drawings shall be submitted to the Service Authority. No wastewater flow shall be allowed to enter the sanitary sewer system until as-built drawings are received and checked for accuracy by the James City Service Authority. Any discrepancies noted during the as-built inspection shall be corrected by the developer's representatives within 30 days.
7. Routine periodic inspections during construction will be provided by the James City Service Authority. These inspections do not relieve the developer from his obligation and responsibility for constructing a sanitary sewer system in strict accordance with the standards and specifications of the James City Service Authority.
8. Any changes to the final plans shall be approved by the James City Service Authority and shall be accurately indicated on the as-built drawings.
9. All lots shall be provided with sewer service connections. The connections shall be extended from the main to the property line or easement line, and shall terminate with a wye, fitting, plug and cleanout with removable plug and metal cover.
10. The developer is required to submit sewer data sheets and shall acquire a certificate to construct prior to commencement of construction.
11. Any required easements, permits and approvals shall be acquired by the developer prior to commencement of sanitary sewer construction.
12. The sewer main contractor shall comply with all applicable laws, ordinances, rules, regulations and orders of any public body having jurisdiction. He shall erect and maintain, as required by the conditions and progress of the work, all necessary safeguards for safety and protection. He shall also notify "Miss Utility" prior to performing any underground excavation.

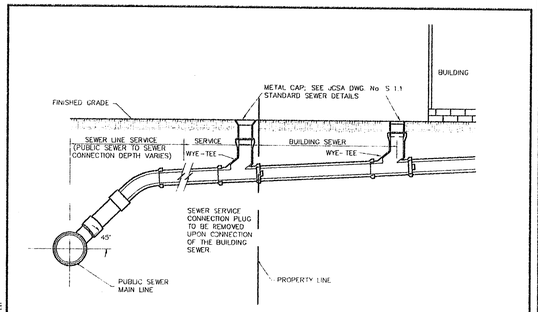

TYPICAL SEWER SERVICE

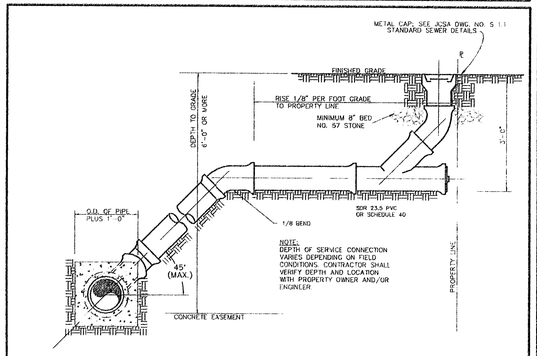

SERVICE CONNECTIONS FOR DEPTHS OVER 8'

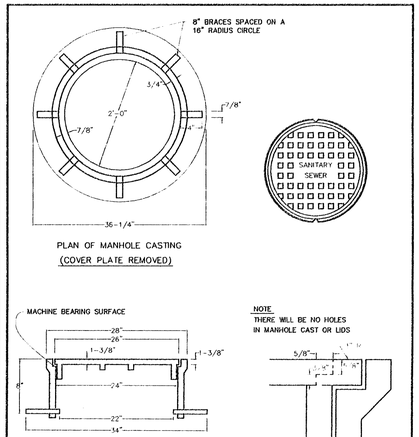

STANDARD MANHOLE CASTING

CONSTRUCTION NOTES:
1. ALL PIPE MATERIAL SHALL BE PVC SDR 35 TO COUPLING.
2. MAIN TO PVC TRANSITION TO BE MADE WITH APPROVED COUPLING.
3. CROWN OF MAIN AND ℄ OF DROP 90° TO MATCH.
4. DROP MAY BE ONE SIZE SMALLER THAN MAIN (6" MINIMUM).
5. PLACEMENT OF DROP NOT TO CONFLICT WITH STEPS.
6. BOTTOM 90° BEND TO BE AT 45° TO DOWNSTREAM FLOW.

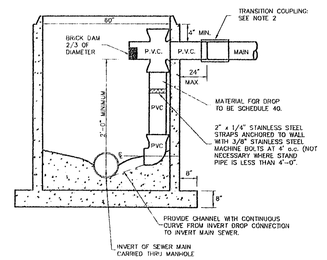

NOTE:
EXTENDED BASE IS OPTIONAL

INSIDE DROP CONNECTION

NOTE:
WHEN DIRECTED BY ENGINEER FOUNDATION LUMBER SHALL BE PLACED THE FULL WIDTH OF THE TRENCH.

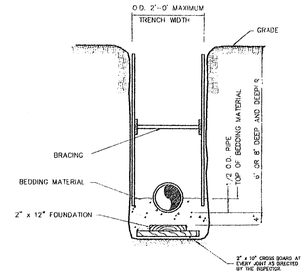

SOLID TIMBER SHEETING AND BRACING TO BE USED WITH CUTS OVER 8'-0" DEEP AND MAY BE LEFT IN PLACE WHEN DIRECTED BY ENGINEER.

UNSTABLE TRENCH SEWER PIPE FOUNDATION

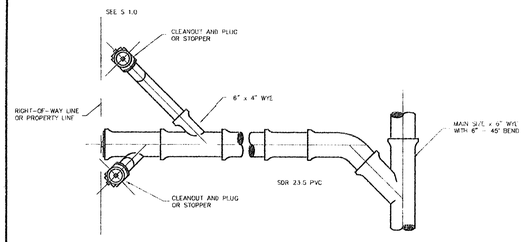

TYPICAL 6" LATERAL SERVING TWO DWELLINGS

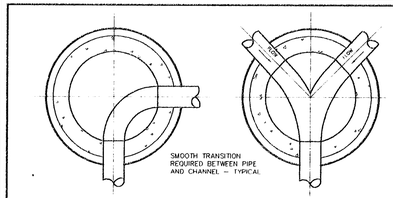

CHANNEL LINING NOTES:
1. CHANNEL LINING SHALL BE CONCRETE, 4" MINIMUM THICK.
2. CHANNEL LINING WIDTH SHALL MATCH INSIDE DIAMETER OF INCOMING AND OUTGOING PIPES. BLEND CHANNEL LINING FOR SMOOTH CONTOUR BETWEEN PIPES.
3. CONCRETE CHANNELS SHALL BE FORMED AS SHOWN AND SHALL HAVE 3000 PSI AT 28 DAYS.

PLANS FOR MANHOLES

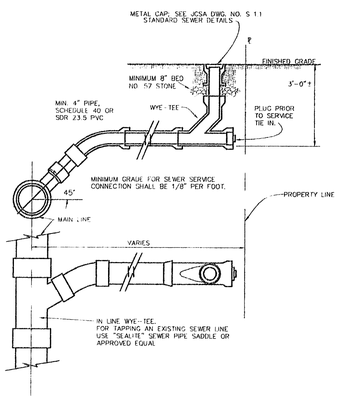

TYPICAL SEWER LATERAL CONNECTION

Rickmond Engineering, Inc.
Civil Engineering
Environmental Engineering
Land Surveying
1643-C Merrimac Trail
Williamsburg, VA 23185
(757)229-1776

Designed By:	Drawn By:	Scale:	Date	Job No.:	File Name:
KMJ	KMJ	AS NOTED	6/26/96	98161	98161DS

COMMONWEALTH OF VIRGINIA
KELLY JENKINS II
No. 022872
10/24/96
PROFESSIONAL ENGINEER

No.	Revision	By	Date

THE VILLAGES AT WESTMINSTER PHASE V
DETAIL SHEET
JAMES CITY COUNTY, VIRGINIA

Job Number	Sheet No.
98161	C12

EROSION AND SEDIMENT CONTROL NOTES

The purpose of the erosion control measures shown on these plans shall be to preclude the transport of all waterborne sediments resulting from construction activities from entering onto adjacent properties or State waters. If field inspection reveals the inadequacy of the plan to confine sediment to the project site, appropriate modifications will be made to correct any plan deficiencies. In addition to these notes, all provisions of the Virginia Erosion and Sediment Control Regulations shall apply to this project.

1. All erosion and sediment control measures shall be installed and maintained in accordance with the "Virginia Erosion and Sediment Control Handbook." The contractor shall be thoroughly familiar with all applicable measures contained therein which may be pertinent to this project.
2. All points of construction ingress and egress shall be protected by a temporary construction entrance to prevent tracking of mud onto public right-of-ways. An entrance permit from VDOT is required prior to any construction activities within State right-of-ways. Where sediment is transported onto a public road surface, the road shall be thoroughly cleaned at the end of each day.
3. A preconstruction meeting shall be held on site between the County, the Developer, the Project Engineer, and the Contractor prior to issuance of the Land Disturbing Permit. The Contractor shall submit a Sequence of Construction to the County for approval prior to the preconstruction meeting. The Contractor will supply the Environmental Division with the name of the individual who will be responsible for ensuring maintenance of installed measures on a daily basis.
4. Sediment basins and traps, perimeter dikes, sediment barriers and other measures intended to trap sediment on-site must be constructed as a first step in grading and be made functional before upslope land disturbance takes place. Earthen structures such as dams, dikes, and diversions must be seeded and mulched immediately after installation. Periodic inspections of the erosion control measures shall be made to assess their condition. Any necessary maintenance of the measures shall be accomplished immediately upon notification by the County and shall include the repair of measures damaged by any subcontractor including those of the public utility companies.
5. Surface flows over cut and fill slopes shall be controlled by either redirecting flows from transversing the slopes or by installing mechanical devices to safely lower water downslope without causing erosion. A temporary fill diversion (Std. & Spec. 3.10) shall be installed prior to the end of each working day.
6. Sediment control measures may require minor field adjustments at time of construction to insure their intended purpose is accomplished. Environmental Division approval will be required for other deviations from the approved plans.
7. The contractor shall place soil stockpiles at the locations shown on this plan or as directed by the engineer. Soil stockpiles shall be stabilized or protected with sediment trapping measures. Off-site waste or borrow areas shall be approved by the Environmental Division prior to the import of any borrow or export of any waste to or from the project site.
8. The contractor shall complete drainage facilities within 30 days following completion of rough grading at any point within the project. The installation of drainage facilities shall take precedence over all underground utilities. Outfall ditches from drainage structures shall be stabilized immediately after construction of same. This includes installation of erosion control stone or paved ditches where required. Any drainage outfalls required for a street must be completed before street grading or utility installation begins.
9. Permanent or temporary soil stabilization must be applied to all denuded areas within 7 days after final grade is reached on any portion of the site. Soil stabilization must also be applied to denuded areas which may not be at final grade but will remain dormant (undisturbed) for longer than 30 days. Soil stabilization measures include vegetative establishment, mulching and the early application of gravel base material on areas to be paved.
10. No more than 300 feet of sanitary sewer, storm sewer, waterlines, or underground utility lines are to be open at one time. Following installation of any portion of these items, all disturbed areas are to be immediately stabilized (i.e., the same day).
11. If disturbed area stabilization is to be accomplished during the months of December, January, of February, stabilization shall consist of mulching in accordance with Specification 3.35. Seeding will then take place as soon as the season permits.
12. The terms Seeding, Final Vegetative Cover or Stabilization, on this plan shall mean the successful germination and establishment of a stable grass cover from a properly prepared seedbed containing the specified amounts of seed, lime, and fertilizer in accordance with Specifications 3.32, Permanent seeding. Irrigation shall be required as necessary to ensure establishment of grass cover.
13. All slopes steeper than 3:1 shall require the use of erosion control blankets such as Excelsior blankets to aid in the establishment of a vegetative cover. Installation shall be in accordance with Specification 3.35, Mulching and Manufacturer's Instructions. No slope shall be created steeper than 2:1.
14. Inlet protection in accordance with Specification 3.07 shall be provided for all storm drain inlets as soon as practical following construction of same.
15. Temporary liners, such as polyethylene sheets, shall be provided for all paved ditches until the permanent concrete liner is installed.
16. Paved ditches shall be required wherever erosion is evident. Particular attention shall be paid to those areas where grades exceed 3 percent.
17. Temporary erosion control measures are not to be removed until all disturbed areas are stabilized. After stabilization is complete, all measures shall be removed within 30 days. Trapped sediment shall be spread and seeded.
18. As-built drawings must be provided for all detention/BMP facilities. Also upon completion, the construction of all detention/BMP facilities shall be certified by a professional engineer who inspected the structure during construction. The certification shall state that to the best of his/her judgment, knowledge and belief the structure was constructed in accordance with the approved plans and specifications.

GENERAL NOTES

1. ALL CONSTRUCTION SHALL CONFORM TO CURRENT COUNTY STANDARDS & SPECIFICATIONS AND VDOT CURRENT SUBDIVISION STREET REQUIREMENTS UNLESS OTHERWISE NOTED.
2. CONTRACTOR SHALL SECURE THE LATEST EDITION OF THE VIRGINIA EROSION AND SEDIMENT CONTROL HANDBOOK AND COMPLY WITH ALL COUNTY REQUIREMENTS FOR EROSION AND SEDIMENT CONTROL.
3. ALL CUTS, VEGETATION AND DELETERIOUS MATERIAL ENCOUNTERED SHALL BE REMOVED AND DISPOSED OF OFF SITE.
4. SELECT MATERIAL IS REQUIRED FOR FILL AND BACKFILL UNDER PARKING LOT, FOOTINGS, AND STRUCTURES. IT SHALL BE PLACED IN LAYERS NOT TO EXCEED EIGHT INCHES (8") IN THICKNESS AND COMPACTED TO 95% OF MAXIMUM DENSITY AS DETERMINED BY ASTM D-698.
5. ALL CONCRETE SHALL BE CLASS A-3 AIR ENTRAINED (3000 PSI).
6. ALL GREEN AREA, WITHIN LIMITS OF CONSTRUCTION, TO BE TOPSOILED, FERTILIZED, SEEDED, AND MULCHED.
7. CONTRACTOR SHALL OBTAIN AT HIS OWN EXPENSE, ANY PERMIT OR BOND IF REQUIRED BY ANY GOVERNMENT AGENCY.
8. CONTRACTOR SHALL BE RESPONSIBLE FOR LOCATING, PROTECTING, AND RESOLVING ANY CONFLICTS WITH EXISTING UTILITIES AND SHALL REPAIR, AT HIS OWN EXPENSE, ALL UTILITIES TO BE RELOCATED OR DAMAGED BY CONSTRUCTION.
9. ANY ERRORS OR DISCREPANCIES SHALL BE REPORTED TO THE ARCHITECT/ENGINEER OR THE SURVEYOR BEFORE PROCEEDING WITH THE WORK.
10. DEWATERING OR EXCAVATION, IF NEEDED, IS PART OF THIS CONTRACT. PER CURRENT JCSA WATER AND SANITARY SEWER STANDARDS AND SPECIFICATIONS.
11. BEFORE DIGGING CALL "MISS UTILITY" OF VIRGINIA 1-800-552-7001.
12. CONTRACTOR SHALL OBTAIN PERMITS FROM THE STATE HIGHWAY DEPARTMENT PRIOR TO ANY WORK IN THE STATE'S RIGHT-OF-WAY. THE CONTRACTOR SHALL RESTORE AND CLEAN UP THE SITE TO THE SATISFACTION OF THE HIGHWAY DEPARTMENT.
13. CONTRACTOR MUST OBTAIN ALL NECESSARY BUILDING PERMITS PRIOR TO CONSTRUCTION.

SPECIFIC APPLICATION

THIS METHOD OF INLET PROTECTION IS APPLICABLE WHERE HEAVY CONCENTRATED FLOWS ARE EXPECTED, BUT NOT WHERE PONDING AROUND THE STRUCTURE MIGHT CAUSE EXCESSIVE INCONVENIENCE OR DAMAGE TO ADJACENT STRUCTURES AND UNPROTECTED AREAS.

* GRAVEL SHALL BE VDOT #3. #357 OR #5 COARSE AGGREGATE.

GRAVEL AND WIRE MESH DROP INLET SEDIMENT FILTER

CORRECT METHOD OF TREE FENCING

TRIANGULAR BOARD FENCING

CORRECT TRUNK ARMORING

FENCING AND ARMORING

CONSTRUCTION OF A SILT FENCE (WITHOUT WIRE SUPPORT)

STONE CONSTRUCTION ENTRANCE

SPECIFIC APPLICATION

THIS METHOD OF INLET PROTECTION IS APPLICABLE AT CURB INLETS WHERE PONDING IN FRONT OF THE STRUCTURE IS NOT LIKELY TO CAUSE INCONVENIENCE OR DAMAGE TO ADJACENT STRUCTURES AND UNPROTECTED AREAS.

* GRAVEL SHALL BE VDOT #3, #357 OR 5 COARSE AGGREGATE.

GRAVEL CURB INLET SEDIMENT FILTER

NOTES:
1. APRON LINING MAY BE RIPRAP, GROUTED RIPRAP, GABION BASKET, OR CONCRETE.
2. La IS THE LENGTH OF THE RIPRAP APRON AS CALCULATED USING PLATES 3.18-3 AND 3.18-4.
3. d = 1.5 TIMES THE MAXIMUM STONE DIAMETER, BUT NOT LESS THAN 6 INCHES.

PIPE OUTLET CONDITIONS

GENERAL NOTES

BASIS OF PAYMENT TO BE Sq. Yds. OF PROTECTIVE COVERING COMPLETE IN PLACE. PROTECTIVE COVERING IS TO BE LOCATED AS INDICATED ON THE PLANS IN ACCORDANCE WITH THE DIMENSIONS SPECIFIED ON TYPICAL SECTION.

JUTE MESH OR SOIL RETENTION MAT IN ACCORDANCE WITH THE SPECIFICATIONS MAY BE USED AT THE OPTION OF THE CONTRACTOR.

"T-TOP" STAPLES OR OTHER MANUFACTURERS DESIGN APPROVED BY THE ENGINEER MAY BE SUBSTITUDED FOR THE STAPLES SHOWN.

PROTECTIVE COVERING INSTALLATION CRITERIA

CROSS SECTION

LEVEL SPREADER WITH RIGID LIP

* MIN. PHYSICAL REQUIREMENTS OF FILTER CLOTH NOTED IN STD. & SPEC. 3.19, RIPRAP

UNDERDRAIN OUTLET MARKER DETAIL

4"x8"x1/32" Min. Steel or .080 inch Min. Aluminum Plate

Aluminum or steel rivets or bolts compatible with post material

U-Type Rolled Rail Steel Post of 1.33 lbs./ft. or Aluminum Alloy 6063-T6 @ .78 Lbs./Ft.

4'-0"

3'-0"

Steel posts and plates to be painted or galvanized in accordance with the spec. If painted the final coat shall be No.13 aluminum paint or No.11 white paint.

Marker to be placed at outlet end of all underdrain installations barring locations where underdrain is tied into other drainage structures or as directed by the Engineer.

NOTES

Outlet pipes are to be installed at 45° to underdrain pipe.

All pipes to be 6" unless otherwise noted on plans.

The normal location of underdrain pipe is to be 4'-0" below the near edge of pavement as shown.

Where the bottom of select material is greater than 4'-0" below the pavement, the underdrain pipe is to be coincident with the bottom of select material, and the trench depth and backfill quantity increased accordingly.

Drainable material shall have a maximum of 8% material by weight finer than sieve No.200.

LONGITUDINAL PERFORATED PIPE

Type of Pipe	Crushing Strength LBS/LF					
	* W.T.	4" I.D.	* W.T.	6" I.D.	* W.T.	8" I.D.
Vitrified Clay		1000		1000		1000
Porous Concrete Wall		1000		1100		1300
Concrete		1500		1500		1600
Corrugated Steel			0.52		0.64	
Corrugated Aluminum			0.48		0.60	
Asphalt Fiber		1200		1400		1700
Smooth Wall PVC	.103		.153		.205	
Corrugated P.E. **		AASHTO M-252		AASHTO M-252		AASHTO M-252

* Wall Thickness (min)-Inches.
** Coiled tubing allowed in 4" diameter only.

NON-PERFORATED OUTLET PIPE

Type of Pipe	Crushing Strength LBS/LF					
	* W.T.	4" I.D.	* W.T.	6" I.D.	* W.T.	8" I.D.
Vitrified Clay		1000		1000		1000
Concrete		1500		1500		1500
Corrugated Steel			0.52		0.64	
Corrugated Aluminum			0.48		0.60	
Asphalt Fiber		1200		1400		1700
Smooth Wall PVC	.103		.153		.205	
Smooth Wall PE		AASHTO M-252		AASHTO M-252		AASHTO M-252

* Wall Thickness (min)-Inches.

SPECIFICATION REFERENCE
240 501 701

STANDARD PIPE UNDERDRAIN & METHODS OF INSTALLATION

VIRGINIA DEPARTMENT OF TRANSPORTATION

108.01

Rickmond Engineering, Inc.
1643-C Merrimac Trail
Williamsburg VA 23185
(757)229-1776
Civil Engineering
Environmental Engineering
Land Surveying

Designed By:	Drawn By:	Scale:	Date:	Job No.:	File Name:
KMJ	KMJ	AS NOTED	6/26/98	98161	98161DS

No.	By	Revision	App.	Date

THE VILLAGES AT WESTMINSTER PHASE V

DETAIL SHEET

JAMES CITY COUNTY VIRGINIA

Job Number	Sheet No.
98161	C13

I:\98161\98161C7 Fri Jun 26 15:33:19 1998

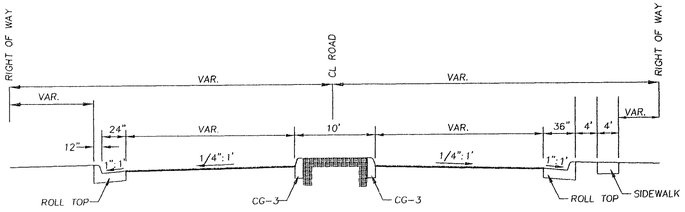

ST. JOHNS WOOD (VAR. R/W) DESIGN SPEED 30 MPH STA 0+00 – 3+50

SURFACE: 220# PSY ASPHALT CONCRETE, TYPE SM-2A
BASE: 3" ASPHALT CONCRETE, TYPE BM-2
SUBBASE: 6" AGGREGATE BASE MATERIAL, TYPE I, SIZE #21-B

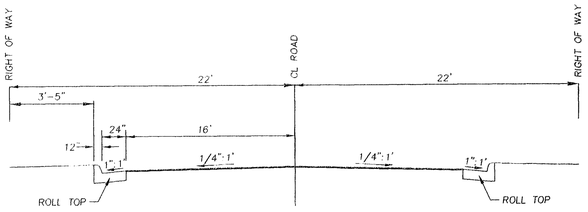

ST. JOHNS WOOD (44' R/W) DESIGN SPEED 25 MPH STA 3+50 – END
REGENTS PARK (44'R/W) DESIGN SPEED 25 MPH

SURFACE: 3" PSY ASPHALT CONCRETE, TYPE SM-2A (TO BE INSTALLED IN TWO LIFTS)
BASE: 6" UNTREATED AGGREGATE, TYPE I, SIZE #21-B

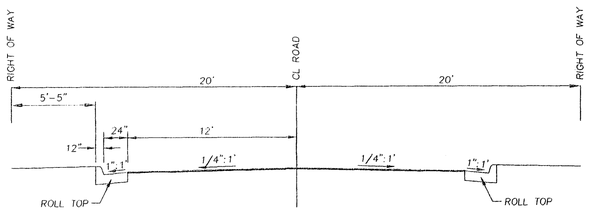

COTSWOLD COURT (40' R/W) DESIGN SPEED 20 MPH
PRINCE WILLS WAY (40' R/W) DESIGN SPEED 20 MPH

SURFACE: 2" ASPHALT CONCRETE, TYPE SM-2A
BASE: 6" UNTREATED AGGREGATE, TYPE I, SIZE #21-B

NOTES:
1) WHEN ASPHALT IS LESS THAN 4", A PRIME COAT MUST BE APPLIED TO THE ROAD BASE AGGREGATE PRIOR TO THE APPLICATION OF SM-2A (PRIME COAT RC-250, 0.30 GALLONS PER SQUARE YARD).
2) FIRE HYDRANTS AND STREET LIGHTS SHALL BE PLACED A MINIMUM DISTANCE OF 9.5' OFF THE EDGE OF PAVEMENT.
3) THE INTERSECTION FILLETS SHALL BE A MINIMUM OF 35'.
4) STONE SHALL BE PLACED IN LIFTS NO GREATER THAN 6" AND COMPACTED TO 4".

Rickmond Engineering, Inc.
Civil Engineering
Environmental Engineering
Land Surveying
1643 Merrimac Trail
Williamsburg, VA 23185
(757)229-1776

Designed By:	Drawn By:	Scale:	Date:	Job No.:	File Name:
KMJ	KMJ	AS NOTED	6/26/98	98161	98161C14

COMMONWEALTH OF VIRGINIA
KM JOHNSON II
No. 022872
PROFESSIONAL ENGINEER
1/5/99

No.	By	Revision	App.	Date
2	RJH	REV PER COUNTY COMMENTS LTR DTD 2/26/99	KMJ	3.15.99
1	KMJ	REV PER COUNTY COMMENTS LTR DTD 12/11/98	KMJ	1.5.99

THE VILLAGES AT WESTMINSTER PHASE V
PAVEMENT DESIGN SHEET
JAMES CITY COUNTY VIRGINIA

Job Number	Sheet No.
98161	C14

I:\98161\98161C14 Tue Jan 05 15:14:48 1999

EROSION AND SEDIMENT CONTROL NOTES

The purpose of the erosion control meaures shown on these plans shall be to preclude the transport of all waterborne sediments resulting from construction activities from entering onto adjacent properties or State waters. If field inspection reveals the inadequacy of the plan to confine sediment to the project site, appropriate modifications will be made to correct any plan deficiencies. In addition to these notes, all provisions of the Virginia Erosion and Sediment Control Regulations shall apply to this project.

1. All erosion and sediment control measures shall be installed and maintained in accordance with the "Virginia Erosion and Sediment Control Handbook" The contractor shall be thoroughly familiar with all applicable measures contained therein which may be pertinent to this project.
2. All points of construction ingress and egress shall be protected by a temporary construction entrance to prevent tracking of mud onto public right-of-ways. An entrance permit from VDOT is required prior to any construction activities within State right-of-ways. Where sediment is transported onto a public road surface, the road shall be thoroughly cleaned at the end of each day.
3. A preconstruction meeting shall be held on site between the County, the Developer, the Project Engineer, and the Contractor prior to issuance of the Land Disturbing Permit. The Contractor shall submit a Sequence of Construction to the County for approval prior to the preconstruction meeting. The Contractor will supply the Environmental Div. with the name of the individual who will be responsible for ensuring maintenance of installed measures on a daily basis.
4. Sediment basins and traps, perimeter dikes, sediment barriers and other measures intended to trap sediment on-site must be constructed as a first step in grading and be made functional before upslope land disturbance takes place. Earthen structures such as dams, dikes, and diversions must be seeded and mulched immediately after installation. Periodic inspectione of the erosion control measures shall be made to assess their condition. Any necessary maintenance of the measures shall be accomplished immedlately upon notification by the County and shall include the repair of measures damaged by any subcontractor including those of the public utility companies.
5. Surface flows over cut and fill slopes shall be controlled by either redirecting flows from transversing the slopes or by installing mechanical devices to safely lower water downslope without causing erosion. A temporary fill diversion (Std. & Spec. 3.10) shall be installed prior to the end of each working day.
6. Sediment control measures may require minor field adjustments at time of construction to insure their intended purpose is accomplished. Environmental Division approval will be required for other deviations from the approved plans.
7. The contractor shall place soil stockpiles at the locations shown on this plan or as directed by the engineer. Soil stockpiles shall be stablized or protected with sediment trapping measures. Off-site waste or borrow areas shall be approved by the Environmental Division prior to the import of of any borrow or export of any waste to or from the project site.
8. The contractor shall complete drainage facilities within 30 days following completion of rough grading at any point within the project. The installation of drainage facilities shall take precedence over all underground utilities. Outfall ditches from drainage structures shall be stabilized immediately after construction of same. This includes installation of erosion control stone or paved ditches where required. Any drainage outfalls required for a street must be completed before street grading or utility installation begins.
9. Permanent or temporary soil stabilization must be applied to all denuded areas within 7 days after final grade is reached on any portion of the site. Soil stabilization must also be applied to denuded areas which may not be at final grade but will remain dormant (undisturbed) for longer than 30 days. Soil stabilization measures include vegetative establishment, mulching and the eary application of gravel base material on areas to be paved.
10. No more than 300 feet of sanitary sewer, storm sewer, waterlines, or underground utility lines are to be open at one time. Following installation of any portion of these items, all disturbed areas are to be immediately stabilized (i.e., the same day).
11. If disturbed area stabilization is to be accomplished during the months of December, January, of February, stabilization shall consist of mulching in accordance with Specification 3.35. Seeding will the take place as soon as the season permits.
12. The term Seeding, Final Vegetative Cover or Stabilization, on this plan shall mean the successful germination and establishment of a stable grass cover from a properly prepared seedbed containing the specified amounts of seed, lime, and fertilizer in accordance with Specifications 3.32, Permanent seeding. Irrigation shall be required as necessary to ensure establishment of grass cover.
13. All slopes steeper than 3:1 shall require the use of erosion control blankets such as excelsior blankets to aid in the establishment of a vegetative cover. Installation shall be in accordance with Specification 3.35, Mulching and Manufacturer's Instructions. No slopes shall be created steeper than 2:1.
14. Inlet protection in accordance with Specification 3.07 shall be provided for all storm drain inlets as soom as practical following construction of same.
15. Temporary liners, such as polyethylene sheets, shall be provided for all paved ditches until the permanent concrete liner is installed.
16. Paved ditches shall be required wherever erosion is evident. Particular attention shall be paid to those areas where grades exceed 3 percent.
17. Temporary erosion control measures are not to be removed until all disturbed areas are stabilized. After stabilization is complete, all measures shall be removed within 30 days. Trapped sediment shall be spread and seeded.
18. As-built drawings must be provided for all detention/BMP facilities. Also upon completion, the construction of all detention/BMP facilities shall be certified by a professional engineer who inspected the structure during construction. The certification shall state that to the best of his/her judgement knowledge and belief the structure was constructed in accordance with the approval plans and specifications.

3/10/04
WROTE LETER

GENERAL NOTES:

1. ALL CONSTRUCTION SHALL CONFORM TO CURRENT CITY/COUNTY AND/OR VDOT STANDARDS AND SPECIFICATIONS UNLESS OTHERWISE SPECIFIED.
2. CONTRACTOR SHALL SECURE THE LATEST EDITION OF THE VIRGINIA EROSION AND SEDIMENT CONTROL HANDBOOK AND COMPLY WITH ALL COUNTY REQUIREMENTS FOR EROSION AND SEDIMENT CONTROL.
3. ALL CUTS, VEGETATION AND DELETERIOUS MATERIAL ENCOUNTERED SHALL BE REMOVED AND DISPOSED OF OFF SITE.
4. SELECT MATERIAL REQUIRED FOR FILL AND BACKFILL UNDER PARKING LOT, FOOTINGS AND STRUCTURES. IT SHALL BE PLACED IN LAYERS NOT TO EXCEED EIGHT INCHES (8") IN THICKNESS AND COMPACTED TO 95% OF MAXIMUM DENSITY AS DETERMINED BY ASTM D-698.
5. ALL CONCRETE SHALL BE CLASS A-3 AIR ENTRAINED (3000 PSI).
6. ALL GREEN AREA, WITHIN LIMITS OF CONSTRUCTION, TO BE TOPSOILED, FERTILIZED AND MULCHED.
7. CONTRACTOR SHALL OBTAIN AT HIS OWN EXPENSE, ANY PERMIT OR BOND IF REQUIRED BY ANY GOVERNMENT AGENCY.
8. CONTRACTOR SHALL BE RESPONSIBLE FOR LOCATION, PROTECTING, AND RESOLVING ANY CONFLICTS WITH EXISTING UTILITIES AND SHALL REPAIR, AT HIS OWN EXPENSE, ALL UTILITIES TO BE RELOCATED OR DAMAGED BY CONSTRUCTION.
9. ANY ERRORS OR DESCREPANCIES SHALL BE REPORTED TO THE ARCHITECT OR THE SURVEYOR BEFORE PROCEEDING WITH THE WORK.
10. DEWATERING OR EXCAVATION, IF NEEDED, IS PART OF THIS CONTRACT
11. BEFORE DIGGING CALL "MISS UTILITY" OF VIRGINIA 1-800-552-7001.
12. CONTRACTOR SHALL OBTAIN PERMITS FROM THE STATE HIGHWAY DEPARTMENT PRIOR TO ANY WORK IN THE STATE'S RIGHT-OF -WAY. THE CONTRACTOR TO RESTORE AND CLEAN UP THE SITE TO THE SATISFACTION OF THE HIGHWAY DEPARTMENT.
13. CONTRACTOR MUST OBTAIN ALL NECESSARY BUILDING PERMITS PRIOR TO CONSTRUCTION.

END-SECTION DIMENSIONS (12"-60" PIPE)

DIAM.	A	B	C	D	E
12"	4"	2'-0"	2'-0"	[illegible]-0"	2'-0"
15"	6"	2'-3"	1'-9"	[illegible]-0"	2'-6"
18"	9"	2'-3"	1'-9"	[illegible]-0"	3'-0"
24"	9-1/2"	3'-7"	2'-6"	[illegible]-1"	4'-0"
30"	1'-0"	4'-6"	1'-7-3/4"	6[illegible]-1/4"	5'-0"
36"	1'-3"	5'-3"	2'-10-3/4"	8[illegible]-3/4"	6'-0"
42"	1'-9"	6'-3"	2'-11"	[illegible]-2"	6'-6"
48"	2'-0"	6'-0"	2'-1"	[illegible]-2"	7'-0"
54"	2'-3"	5'-6"	2'-9-1/4"	8[illegible]-1/4"	7'-6"
60"	2'-11"	5'-0"	3'-1"	[illegible]-3"	8'-0"

END-SECTION DIMENSIONS (ALTERNATE 12"-48" PIPE)

DIAM.	A	B	C	D	E
12"	4"	2'-0"	4'-1"	6'-1"	2'-0"
15"	6"	2'-3"	3'-10"	6'-1"	2'-6"
18"	9"	2'-3"	3'-10"	6'-1"	3'-0"
24"	10"	3'-7"	2'-6"	6'-3"	4'-0"
30"	1'-0"	4'-6"	1'-7-3/4"	6'-1-3/4"	5'-0"
36"	1'-3"	5'-3"	2'-10-3/4"	8'-1-3/4"	6'-0"
42"	1'-9"	5'-3"	2'-11"	8'-2"	6'-6"
48"	2'-0"	6'-0"	2'-2"	8'-2"	7'-0"

NOTE. PIPE LENGTHS SHOWN ON PLANS ARE BASED ON END-SECTION DESIGN SHOWN ON THE LEFT IF THE CONTRACTOR ELECTS TO USE THE ALTERNATE DESIGN SHOWN ON THE RIGHT, LENGHTS WILL BE REDUCED BY THE DIFFERENCE IN DIMENSION "D"

FLARED END-SECTIONS FOR CONCRETE PIPE CULVERTS (ES-1)

GENERAL NOTES

PROTECTIVE COVERING INSTALLATION CRITERIA

NOTE:

1. ANTI-VORTEX DEVICE (CAP AND RISER) MANUFACTURED IN ACCORDANCE WITH ASTM C478.
2. DIMENSIONS SUBJECT TO PERMISSIBLE VARIATIONS OF ASTM C478.
3. INLET AREA (AREA BETWEEN DEVICE I.D. AND RISER O.D.) IS GREATER THAN OUTLET AREA (AREA OF RISER I.D.)
4. SLAB REINFORCEMENT TO BE ASTM A615 #4 BARS @ 8" E.W. CIRCUMFERENTIAL REINFORCEMENT TO BE Asc = 1 @ 0.150 2x6 W2.5 x W2.5 WWF MINIMUM. MATERIAL PROPERTIES: fy = 60 ksi, fc = 4 ksi. CONCRETE COVER OVER REINFORCEMENT (CCOR) = 1", UNLESS NOTED
5. DI-1 FRAME & GRATE IS AVAILABLE FOR 48" I.D. RISERS AND LARGER.

RISER I.D.	RISER O.D.	ANTI-VORTEX CAP I.D.	ANTI-VORTEX CAP O.D.	NOTCH DIAMETER	APPROX. CAP WEIGHT
24"	30"	48"	58"	34"	1.49 T
27"	33½"	60"	70" OR 72"	37½"	2.28 T
30"	37"	60"	70" OR 72"	41"	2.25 T
36"	44"	60"	70" OR 72"	48"	2.22 T
42"	51"	72"	85"	55"	3.16 T
48"	58"	84"	100"	62"	4.27 T
54"	66½"	84"	100"	70½"	4.20 T
60"	72"	96"	114"	76"	5.48 T
66"	80½"	96"	114"	84½"	5.39 T
72"	86"	108"	129"	90"	6.83 T
78"	94½"	126"	147"	98½"	8.97 T
84"	100"	126"	147"	104"	8.90 T

PCI71

CP&P
Technical Manual page 14.1

PRECAST ANTI-VORTEX DEVICE (CAP AND RISER)

ORIGINAL DATE	02-01-95	RCH
LAST REVISION		
SCALE	3/8 = 1'-0"	
TOPIC - PROJECT # - DRAWING #	ST-0847-63	

CONCRETE PIPE & PRODUCTS CO., INC.
P.O. Box 1223 ☐ Richmond, Virginia 23209 ☐ 804-233-5471

PCI71

CP&P
Technical Manual page 14.4

ANTI-SEEP COLLAR

ORIGINAL DATE	02-01-95	RCH
LAST REVISION		
SCALE	3/8 = 1'-0"	
TOPIC - PROJECT # - DRAWING #	ST-1087-70	

CONCRETE PIPE & PRODUCTS CO., INC.
P.O. Box 1223 ☐ Richmond, Virginia 23209 ☐ 804-233-5471

NOTES 1. APRON LINING MAY BE RIPRAP, GROUTED RIPRAP, GABION BASKET, OR CONCRETE.
2. La IS THE LENGTH OF THE RIPRAP APRON AS CALCULATED USING PLATES 3.18-3 AND 3.18-4
3. d = 1.5 TIMES THE MAXIMUM STONE DIAMETER, BUT NOT LESS THAN 6 INCHES

PIPE OUTLET CONDITIONS

PCI71

POND I

POND OUTLET STRUCTURE

POND ELEVATIONS

TOP ELEVATION	74.00
100 YR STORM ELEVATION	66.49
2 YR STORM ELEVATION	63.99
STANDING WATER ELEVATION	61.00

10" DIAMETER ORIFICE TRASH PROTECTION

POND II

CORE & SHELL MATERIAL TO BE PLACED IN 6" TO 8" LOOSE LIFTS AND COMPACTED TO 95% MAXIMUM DRY DENSITY AT OPTIMUM MOISTURE CONTENT. FILL MATERIAL SHALL BE FREE FROM ORGANICS, STUMPS, ROOTS & OTHER DELETERIOUS MATERIAL.

KEY TRENCH WILL BE EXCAVATED AND BACKFILLED UNDER THE SUPERVISION OF A GEOTECHNICAL ENGINEER TO A MINIMUM DEPTH OF 4'-0"

REMOVAL OF UNSUITABLE MATERIAL UNDER DAM TO BE COMPLETED UNDER THE SUPERVISION OF A GEOTECHNICAL ENGINEER

POND OUTLET STRUCTURE

POND ELEVATIONS

TOP ELEVATION	58.00
100 YR.. STORM ELEVATION	56.99
2 YR. STORM ELEVATION	53.66
STANDING WATER ELEVATION	50.00

PCI71

CONCRETE CRADLE

Rickmond Engineering, Inc.
1643-C Merrimac Trail
Williamsburg, VA 23185
(804)229-1776 or 898-4149
Civil Engineering
Environmental Engineering
Land Surveying

Designed By	Drawn By	Scale	Date	Job No.	File Name
KMJ	KMJ	AS NOTED	8/6/97	96106	96106DS

COMMONWEALTH OF VIRGINIA
K.M. JENKINS II
No.022872
6/18/97
PROFESSIONAL ENGINEER

No.	By	Revision	App.	Date
2	RJH	REV PER COUNTY COMMENTS LTR DTD 10/3/97	KMJ	10.9.97
1	CAN	REV PER COUNTY COMMENTS LTR DTD 9/8/97	KMJ	9.11.97

THE VILLAGES AT WESTMINSTER RETENTION PONDS
DETAIL SHEET
JAMES CITY COUNTY VIRGINIA

Job Number	Sheet No.
96106	S5

THE VILLAGES AT WESTMINSTER
RETENTION PONDS

JAMES CITY COUNTY, VIRGINIA

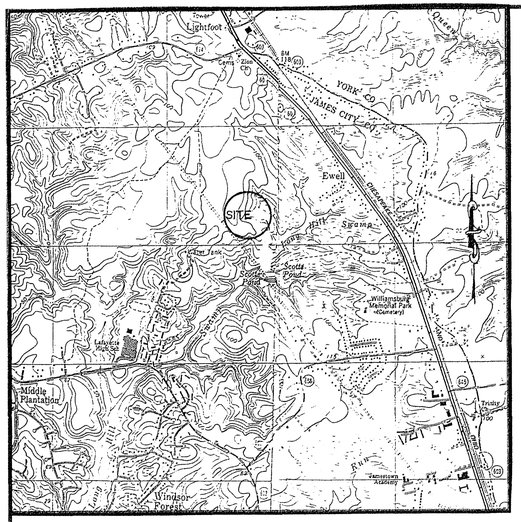

VICINITY MAP
SCALE: 1"=2000'

TABLE OF CONTENTS

SHEET CS	COVER SHEET
SHEET S2	POND I PLAN
SHEET S3	POND II PLAN
SHEET S4	DETAIL SHEET
SHEET S5	DETAIL SHEET

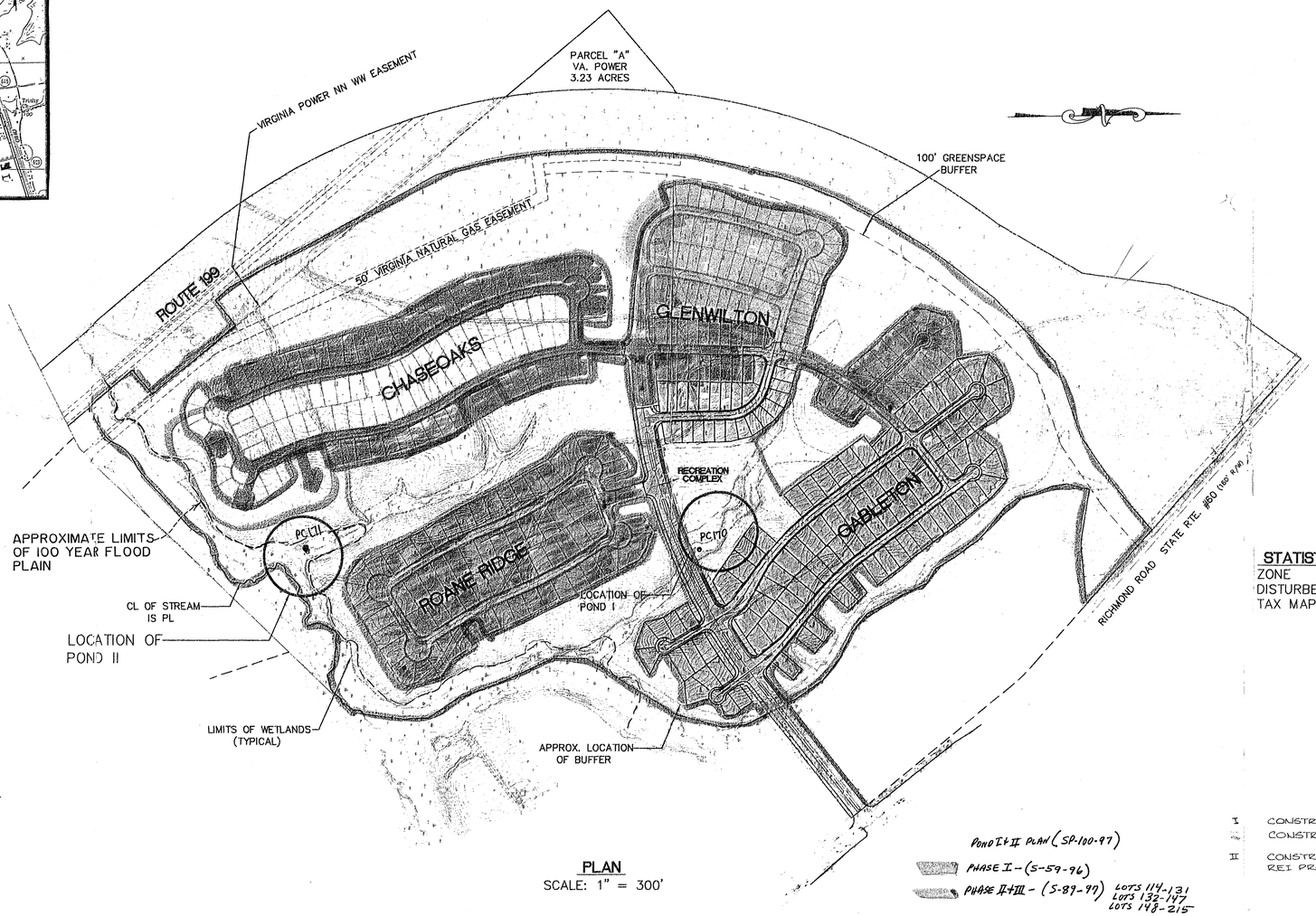

PLAN
SCALE: 1" = 300'

STATISTICAL INFORMATION

ZONE	R2, RESIDENTIAL CLUSTER DEVELOPMENT
DISTURBED AREA	2.07 ACRES
TAX MAP 32-2, PARCEL 57	

COUNTY OF JAMES CITY
FINAL SITE PLAN

Received .....

APPROVALS	DATE
Fire Dept.	
Health Dept.	
Hgtwy. Dept. PMG/PDH	8/28/97
Plan. Comm.	5/14/98
Pub. Wks. Dept. DEC/PDH	5/7/98
Zoning Adm.	5/14/98
JCSA	
Other WMG/PDH	8/22/97
Other	

SP-100-97

COMMONWEALTH OF VIRGINIA
K.M. JENKINS II
No. 022872
11/20/97
PROFESSIONAL ENGINEER

NOV 1997
RECEIVED
PLANNING DEPARTMENT

POND I & II PLAN (SP-100-97)

PHASE I - (S-59-96)

PHASE II & III - (S-89-97) LOTS 114-131, LOTS 132-147, LOTS 148-215

PHASE IV (S-74-98) LOTS 89-103, LOTS 216-274

Phase V (S-113-98) LOTS 275-382

100 YEAR FLOOD PLAIN DELINEATED HEREON IS FROM FIRM FLOOD INSURANCE RATE MAPS COMMUNITY-PANEL NUMBER 510201 0020 B AND 510201 0035 B, EFFECTIVE DATE: FEBRUARY 6, 1991

PHASING PLAN

I CONSTRUCT POND I IN CONJUNCTION WITH RECREATION CENTER CONSTRUCTION (REI PROJECT No. 97148, SP-90-97)

II CONSTRUCT POND II IN CONJUNCTION WITH ROANE RIDGE (PHASE III, REI PROJECT No. 97175)

OWNER/DEVELOPER:
WARHILL ASSOCIATES, L.L.C.
2 EATON STREET
SUITE 1101
HAMPTON, VIRGINIA 23669

300 0 300 900
Scale 1" = 300 ft

BEFORE DIGGING CALL "MISS UTILITY" OF VIRGINIA AT 1 - 800 - 552 - 7001

Rickmond Engineering, Inc.
1643-C Merrimac Trail
Williamsburg VA 23185
(757)229-1776 or 875-1785
Civil Engineering
Environmental Engineering
Land Surveying

Date: 8/6/97 Project No. 96106 File No. 96106PCS Sheet No. CS

1 KMJ REV PER COUNTY COMMENTS LTR DTD 9/8/97 KMJ 9/11/97

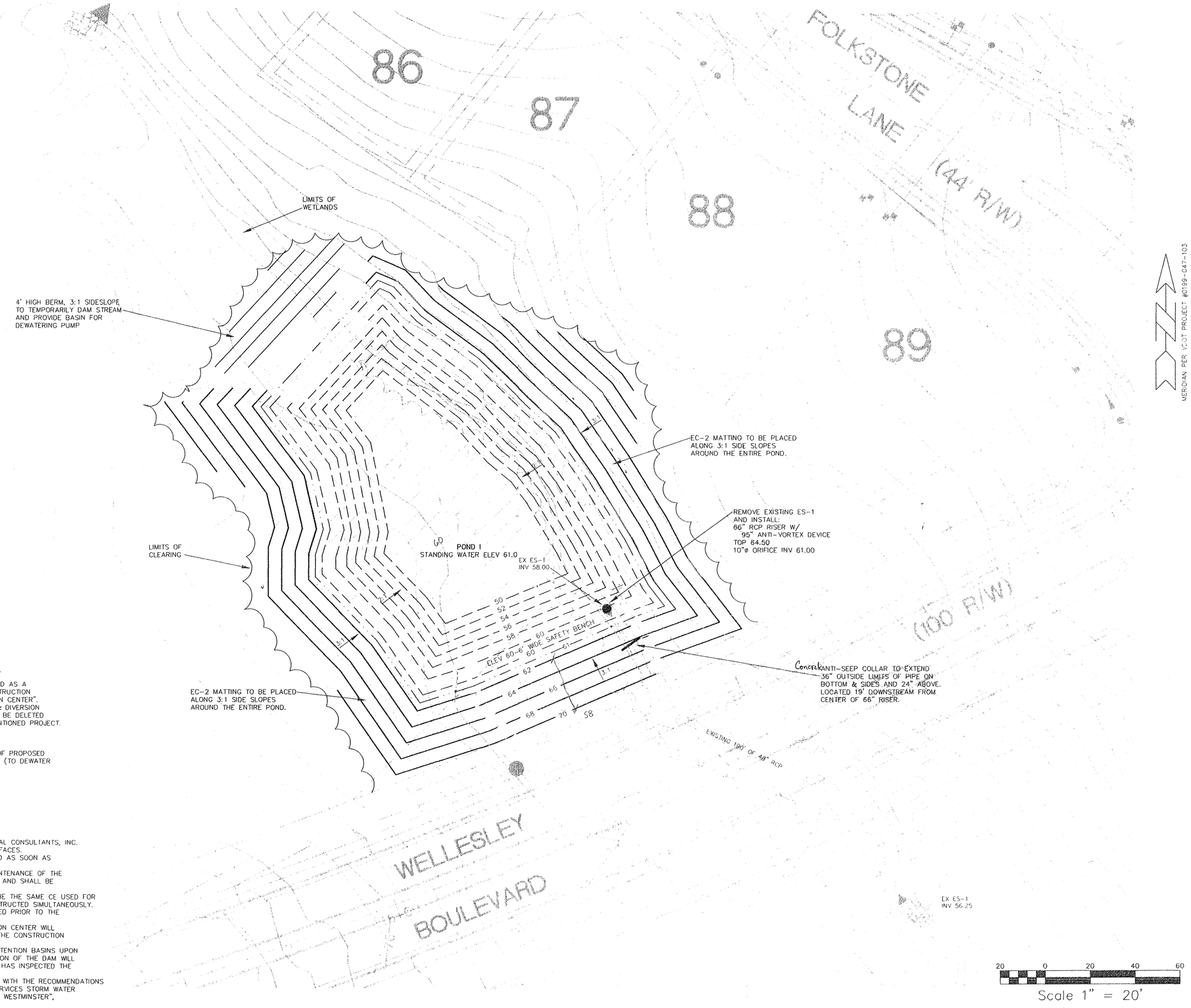

RECREATION CENTER
OPEN FIELD S
TEMPORARY SOIL, STOCKPILE
AREA, STAGING, AND EQUIPMENT
STORAGE AREA FOR POND I CONSTRUCTION
SEE SP-90-97

POND I NARRATIVE & SEQUENCE OF CONSTRUCTION

1) POND #1 IS TO BE CONSTRUCTED AND COMPLETED AS A SEDIMENT BASIN PRIOR TO THE ONSET OF CONSTRUCTION FOR "THE VILLAGES AT WESTMINSTER RECREATION CENTER".
2) UPON COMPLETION OF #1, THE SEDIMENT TRAP & DIVERSION DIKES LOCATED BELOW THE PROPOSED FILL MAY BE DELETED FROM THE APPROVED PLANS OF THE ABOVE MENTIONED PROJECT.

POND I DEWATERING NOTES

1) 4' HIGH BERM TO BE CONSTRUCTED UPSTREAM OF PROPOSED POND TO PROVIDE BASIN TO PUMP WATER FROM (TO DEWATER THE POND SITE) TO THE OUTLET STRUCTURE.

NOTES:
1) WETLANDS DELINEATED BY DOMINION ENVIRONMENTAL CONSULTANTS, INC.
2) FILTER FABRIC TO LINE ALL SOIL TO RIP RAP SURFACES.
3) JUTE MESH TO BE PLACED ON ALL SIDES OF POND AS SOON AS FINAL GRADE IS ACHIEVED.
4) VDOT DOES NOT ASSUME RESPONSIBILITY FOR MAINTENANCE OF THE DETENTION/RETENTION POND OR ITS STRUCTURES, AND SHALL BE SAVED HARMLESS FROM ANY DAMAGE.
5) THE CONSTRUCTION ENTRANCE FOR POND II WILL BE THE SAME CE USED FOR ROANE RIDGE SINCE THE PROJECTS WILL BE CONSTRUCTED SIMULTANEOUSLY. APPROVAL OF ROANE RIDGE SITE PLAN IS REQUIRED PRIOR TO THE CONSTRUCTION OF POND #2.
6) THE CONSTRUCTION ENTRANCE FOR THE RECREATION CENTER WILL BE USED AS THE INGRESS / EGRESS POINT FOR THE CONSTRUCTION OF POND I.
7) RECORD DRAWINGS WILL BE PROVIDED FOR THE RETENTION BASINS UPON COMPLETION. UPON COMPLETION THE CONSTRUCTION OF THE DAM WILL BE CERTIFIED BY A PROFESSIONAL ENGINEER WHO HAS INSPECTED THE STRUCTURE DURING CONSTRUCTION.
8) POND I & II TO BE CONSTRUCTED IN ACCORDANCE WITH THE RECOMMENDATIONS OF "FINAL REPORT GEOTECHNICAL ENGINEERING SERVICES STORM WATER MANAGEMENT DETENTION BASINS THE VILLAGES AT WESTMINSTER", FES PROJECT NO: 1-701218.001, DATED 10/6/97.

Rickmond Engineering, Inc.
1643-C Merrimac Trail
Williamsburg VA 23185
(804)229-1776 or 898-4149
Civil Engineering
Environmental Engineering
Land Surveying

Designed By:	Drawn By:	Scale:	Date:	Job No.:	File Name:
KMJ	KMJ	1"=20'	8/6/97	96106	96106S2

COMMONWEALTH OF VIRGINIA
K.M. JENKINS II
No.022872
11/20/97
PROFESSIONAL ENGINEER

No.	By	Revision	App.	Date
4	KMJ	REV PER COUNTY COMMENTS LTR DTD 11/20/97	KMJ	11.20.97
3	KMJ	REV PER COUNTY COMMENTS LTR DTD 11/3/97	KMJ	11.3.97
2	KMJ	REV PER COUNTY COMMENTS LTR DTD 10/3/97	KMJ	10.9.97
1	KMJ	REV PER COUNTY COMMENTS LTR DTD 9/8/97	KMJ	9.11.97

THE VILLAGES AT WESTMINSTER RETENTION PONDS
POND I PLAN

JAMES CITY COUNTY VIRGINIA

Job Number	Sheet No.
96106	S2

NOTES:
1) WETLANDS DELINEATED BY DOMINION ENVIRONMENTAL CONSULTANTS, INC.
2) FILTER FABRIC TO LINE ALL SOIL TO RIP RAP SURFACES.
3) JUTE MESH TO BE PLACED ON ALL SIDES OF POND AS SOON AS FINAL GRADE IS ACHIEVED.
4) VDOT DOES NOT ASSUME RESPONSIBILITY FOR MAINTENANCE OF THE DETENTION/RETENTION POND OR ITS STRUCTURES, AND SHALL BE SAVED HARMLESS FROM ANY DAMAGE.
5) THE CONSTRUCTION ENTRANCE FOR POND II WILL BE THE SAME CE USED FOR ROANE RIDGE SINCE THE PROJECTS WILL BE CONSTRUCTED SIMULTANEOUSLY. APPROVAL OF ROANE RIDGE SITE PLAN IS REQUIRED PRIOR TO THE CONSTRUCTION OF POND #2.
6) THE CONSTRUCTION ENTRANCE FOR THE RECREATION CENTER WILL BE USED AS THE INGRESS / EGRESS POINT FOR THE CONSTRUCTION OF POND I.
7) RECORD DRAWINGS WILL BE PROVIDED FOR THE RETENTION BASINS UPON COMPLETION. UPON COMPLETION THE CONSTRUCTION OF THE DAM WILL BE CERTIFIED BY A PROFESSIONAL ENGINEER WHO HAS INSPECTED THE STRUCTURE DURING CONSTRUCTION.
8) POND I & II TO BE CONSTRUCTED IN ACCORDANCE WITH THE RECOMMENDATIONS OF "FINAL REPORT GEOTECHNICAL ENGINEERING SERVICES STORM WATER MANAGEMENT DETENTION BASINS THE VILLAGES AT WESTMINSTER", FES PROJECT NO: 1-701218.001, DATED 10/6/97.

EC-2 MATTING TO BE PLACED ALONG 3:1 SIDE SLOPES AROUND ENTIRE POND

PROPOSED SANITARY SEWER LINE TO SERVE CHASEOAKS TO BE INSTALLED IN DAM. SEWER DESIGN AND INSTALLATION TO BE COMPLETED BEFORE DAM IS CONSTRUCTED.

10' WIDE CONCRETE EMERGENCY SPILLWAY BOTTOM WIDTH - 10' SIDE SLOPE 3:1 SPILLWAY TO BE 4" THICK CLASS A-3 CONCRETE SEE SHEET S4 FOR DETAIL 2-FOOT DEEP CUTOFF WALL IS TO BE PROVIDED AT BOTH ENDS OF THE SPILLWAY TO PREVENT UNDERMINING

EMERGENCY SPILLWAY CREST ELEV 56.00

MH #11
RIM 60.00
INV 53.87

ELEV 52 IS APPROXIMATE LIMITS OF 100 YEAR FLOODPLAIN PER FEMA COMMUNITY-PANEL NUMBER 510201-0035B, DATED 2/6/91

4' HIGH BERM, 3:1 SIDESLOPES TO TEMPORARILY DAM STREAM AND PROVIDE BASIN FOR DEWATERING PUMP

LIMITS OF WETLANDS

POND II
STANDING WATER ELEV 50.0

54" RCP RISER W/
84" ANTI-VORTEX DEVICE
TOP 55.00
10"ø ORIFICE ELEV 50.00

ELEV 48.8' WIDE SAFETY BENCH

PC171

10' WIDE GRASS EMERGENCY SPILLWAY BOTTOM WIDTH - 10' SIDE SLOPE 3:1 SPILLWAY TO BE HEAVILY SODDED AND LINED WITH EC-2 MATTING

70' OF 36" RCP @ 0.5% WITH CONC. CRADLE

20' WIDE TOP OF DAM ELEV 58.00

280' OF 8" DIP @ 0.4% CONC. ENCASED

ES-1
INV 49.65
30"X15"X26"
VDOT CLASS I
RIP RAP APRON

SF

EC-2 MATTING TO BE PLACED ALONG 3:1 FACE OF DAM

LIMITS OF CLEARING

FC-2 MATTING TO BE PLACED ALONG 3:1 SIDE SLOPES AROUND ENTIRE POND

MAINTENANCE EASEMENT FOR POND II DEDICTED TO HOA

PROPOSED ROANE RIDGE

CLEARED CUL DE SAC FOR ROANE RIDGE IS TEMPORARY SOIL STOCKPILE AREA, STAGING, AND EQUIPMENT STORAGE AREA FOR POND II CONSTRUCTION

20' WIDE ACCESS EASEMENT AND JCSA UTILITY EASEMENT

270' OF 8" PVC @ 0.4%

MH #10
RIM 63.00
INV 52.83
INV 52.73

POND II DEWATERING NOTES

1) 4' HIGH BERM TO BE CONSTRUCTED UPSTREAM OF PROPOSED POND TO PROVIDE BASIN TO PUMP WATER FROM (TO DEWATER THE POND SITE) TO THE OUTLET STRUCTURE.

20 0 20 40 60
Scale 1" = 20'

Rickmond Engineering, Inc.
Civil Engineering
Environmental Engineering
Land Surveying
1643-C Merrimac Trail
Williamsburg, VA 23185
(804)229-1776 or 898-4149

Designed By:	Drawn By:	Scale:	Date:	Job No.:	File Name:
KMJ	KMJ	1"=20'	8/6/97	96106	96106S3

COMMONWEALTH OF VIRGINIA
KAJenkins II
KAJ JENKINS II
No.022872
PROFESSIONAL ENGINEER
11/6/97

No.	By	Revision	App.	Date
3	KMJ	REV PER COUNTY COMMENTS LTR DTD 11/3/97	KMJ	11.3.97
2	KMJ	REV PER COUNTY COMMENTS LTR DTD 10/3/97	KMJ	10.9.97
1	KMJ	REV PER COUNTY COMMENTS LTR DTD 9/8/97	KMJ	9.11.97

THE VILLAGES AT WESTMINSTER
RETENTION PONDS
POND II PLAN
JAMES CITY COUNTY VIRGINIA

Job Number	Sheet No.
96106	S3

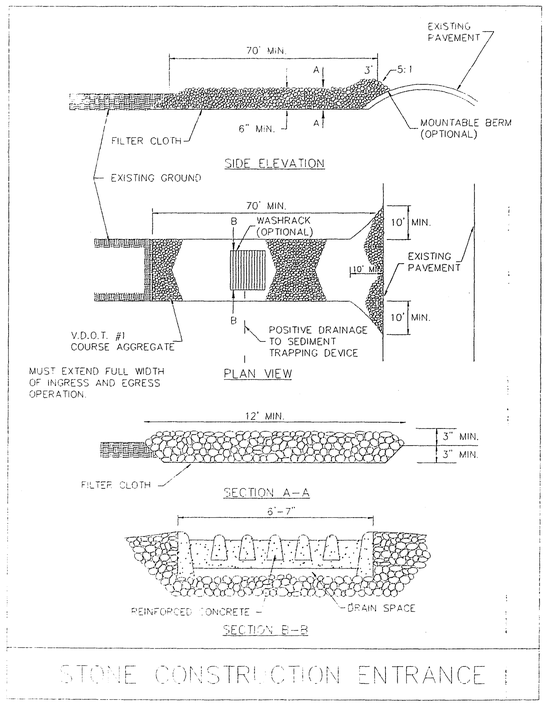

STONE CONSTRUCTION ENTRANCE

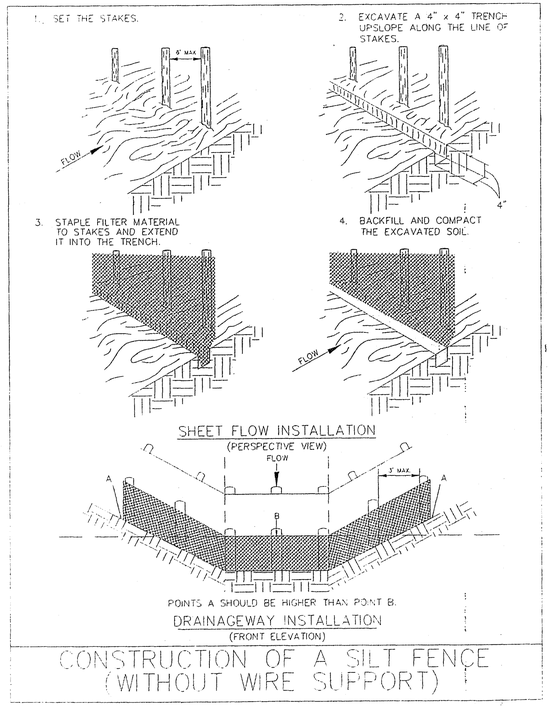

CONSTRUCTION OF A SILT FENCE (WITHOUT WIRE SUPPORT)

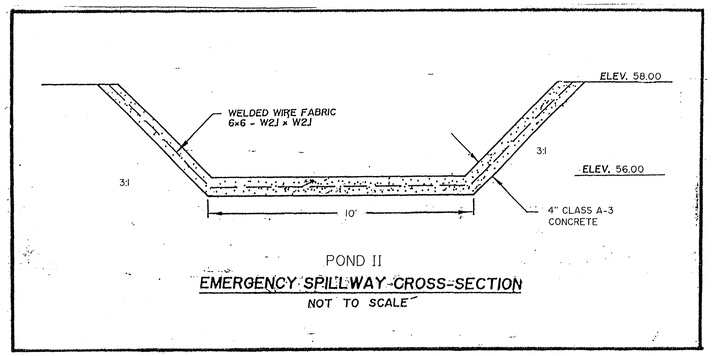

POND II

EMERGENCY SPILLWAY CROSS-SECTION

NOT TO SCALE

TEMPORARY SEDIMENT BASIN DESIGN DATA SHEET

(with or without an emergency spillway)

Project Villages at Westminster

Basin # 1 Location James City County

Total area draining to basin: 63.0 acres.

Basin Volume Design

Wet Storage:

1. Minimum required volume = 67 cu. yds. x Total Drainage Area (acres).
   67 cu. yds. x 63.6 acres = 4,262 cu. yds.
2. Available basin volume = 4,262 cu. yds. at elevation 61.0. (From storage - elevation curve)
3. Excavate 4,261 cu. yds. to obtain required volume*.
   * Elevation corresponding to required volume = invert of the dewatering orifice.
4. Available volume before cleanout required.
   33 cu. yds. x 63.6 acres = 2131 cu. yds.
5. Elevation corresponding to cleanout level = 57.0
   (From Storage - Elevation Curve)
6. Distance from invert of the dewatering orifice to cleanout level = 4 ft. (Min. = 1.0 ft.)

Dry Storage:

7. Minimum required volume = 67 cu. yds. x Total Drainage Area (acres).
   67 cu. yds. x 63.6 acres = 4,262 cu. yds.
8. Total available basin volume at crest of riser* = 7630 cu. yds. at elevation 64.5. (From Storage - Elevation Curve)
   * Minimum = 134 cu. yds./acre of total drainage area.
9. Diameter of dewatering orifice = 10 in.
10. Diameter of flexible tubing = 12 in. (diameter of dewatering orifice plus 2 inches).

Preliminary Design Elevations

11. Crest of Riser = 64.5
    Top of Dam = 74.0
    Design High Water = 66.49
    Upstream Toe of Dam = 3:1

Basin Shape

12. Length of Flow / Effective Width: $\frac{L}{We}$ = 2
    If > 2, baffles are not required X
    If < 2, baffles are required

Runoff

13. Q_2 = _____ cfs (From Chapter 5)
14. $Q_{\frac{2Y}{100}}$ = 159.4 cfs (From Chapter 5)

Principal Spillway Design

15. With emergency spillway, required spillway capacity $Q_p = Q_2$ = _____ cfs. (riser and barrel)
    Without emergency spillway, required spillway capacity $Q_p = Q_{\frac{2Y}{100}}$ = 159.4 cfs. (riser and barrel)
16. With emergency spillway:
    Assumed available head (h) = _____ ft. (Using Q_2)
    h = Crest of Emergency Spillway Elevation - Crest of Riser Elevation
    Without emergency spillway:
    Assumed available head (h) = 1.99 ft. (Using $Q_{\frac{2Y}{100}}$)
    h = Design High Water Elevation - Crest of Riser Elevation
17. Riser diameter (D_r) = 66 in. Actual head (h) = 1.99 ft.
    (From Plate 3.14-8.)
    Note: Avoid orifice flow conditions.
18. Barrel length (l) = 190 ft.
    Head (H) on barrel through embankment = ___ ft.
    (From Plate 3.14-7).
19. Barrel diameter = 48 in.
    (From Plate 3.14-B [concrete pipe] or Plate 3.14-A [corrugated pipe]).
20. Trash rack and anti-vortex device
    Diameter = 95 inches.
    Height = 24 inches.
    (From Table 3.14-D).

Emergency Spillway Design

21. Required spillway capacity $Q_e = Q_{25} - Q_p$ = _____ cfs.
22. Bottom width (b) = _____ ft.; the slope of the exit channel (s) = _____ ft./foot; and the minimum length of the exit channel (x) = _____ ft.
    (From Table 3.14-C).

Anti-Seep Collar Design

23. Depth of water at principal spillway crest (Y) = ___ ft.
    Slope of upstream face of embankment (Z) = ___ :1.
    Slope of principal spillway barrel (S_b) = ___ %
    Length of barrel in saturated zone (L_s) = ___ ft.
24. Number of collars required = ___ dimensions = ___
    (from Plate 3.14-12).

Final Design Elevations

25. Top of Dam = 74.0
    Design High Water = 66.49
    Emergency Spillway Crest = 64.5
    Principal Spillway Crest = 64.50
    Dewatering Orifice Invert = 61.00
    Cleanout Elevation = 57.00
    Elevation of Upstream Toe of Dam or Excavated Bottom of "Wet Storage Area" (if excavation was performed) = 50.0

TEMPORARY SEDIMENT BASIN DESIGN DATA SHEET

(with or without an emergency spillway)

Project Villages at Westminster

Basin # 2 Location James City County

Total area draining to basin: 36.4 acres.

Basin Volume Design

Wet Storage:

1. Minimum required volume = 67 cu. yds. x Total Drainage Area (acres).
   67 cu. yds. x 36.4 acres = 2778 cu. yds.
2. Available basin volume = 2778 cu. yds. at elevation 50.0. (From storage - elevation curve)
3. Excavate 2778 cu. yds. to obtain required volume*.
   * Elevation corresponding to required volume = invert of the dewatering orifice.
4. Available volume before cleanout required.
   33 cu. yds. x 36.4 acres = 1889 cu. yds.
5. Elevation corresponding to cleanout level = 47.1
   (From Storage - Elevation Curve)
6. Distance from invert of the dewatering orifice to cleanout level = 2.9 ft. (Min. = 1.0 ft.)

Dry Storage:

7. Minimum required volume = 67 cu. yds. x Total Drainage Area (acres).
   67 cu. yds. x 36.4 acres = 2778 cu. yds.
8. Total available basin volume at crest of riser* = 7680 cu. yds. at elevation 54.0. (From Storage - Elevation Curve)
   * Minimum = 134 cu. yds./acre of total drainage area.
9. Diameter of dewatering orifice = 10 in.
10. Diameter of flexible tubing = 12 in. (diameter of dewatering orifice plus 2 inches).

Preliminary Design Elevations

11. Crest of Riser = 55.00
    Top of Dam = 58.00
    Design High Water = 56.49
    Upstream Toe of Dam = 3:1

Basin Shape

12. Length of Flow / Effective Width: $\frac{L}{We}$ = 2
    If > 2, baffles are not required X
    If < 2, baffles are required _____

Runoff

13. Q_2 = 17.9 cfs (From Chapter 5)
14. Q_{25} = _____ cfs (From Chapter 5)

Principal Spillway Design

15. With emergency spillway, required spillway capacity $Q_p = Q_2$ = 17.9 cfs. (riser and barrel)
    Without emergency spillway, required spillway capacity $Q_p = Q_{25}$ = ____ cfs. (riser and barrel)
16. With emergency spillway:
    Assumed available head (h) = .95 ft. (Using Q_2)
    h = Crest of Emergency Spillway Elevation - Crest of Riser Elevation
    Without emergency spillway:
    Assumed available head (h) = _____ ft. (Using Q_{25})
    h = Design High Water Elevation - Crest of Riser Elevation
17. Riser diameter (D_r) = 24 in. Actual head (h) = ___ ft.
    (From Plate 3.14-8.)
    Note: Avoid orifice flow conditions.
18. Barrel length (l) = 90 ft.
    Head (H) on barrel through embankment = 5.85 ft.
    (From Plate 3.14-7).
19. Barrel diameter = 36 in.
    (From Plate 3.14-B [concrete pipe] or Plate 3.14-A [corrugated pipe]).
20. Trash rack and anti-vortex device
    Diameter = 84 inches.
    Height = 24 inches.
    (From Table 3.14-D).

Emergency Spillway Design

21. Required spillway capacity $Q_e = Q_{25} - Q_p$ = _____ cfs.
22. Bottom width (b) = 10 ft.; the slope of the exit channel (s) = _____ ft./foot; and the minimum length of the exit channel (x) = _____ ft.
    (From Table 3.14-C).

Anti-Seep Collar Design

23. Depth of water at principal spillway crest (Y) = 8 ft.
    Slope of upstream face of embankment (Z) = 3 :1.
    Slope of principal spillway barrel (S_b) = 0.5 %
    Length of barrel in saturated zone (L_s) = 65 ft.
24. Number of collars required = 2 dimensions = 6'x6'
    (from Plate 3.14-12).

Final Design Elevations

25. Top of Dam = 58.00
    Design High Water = 56.49
    Emergency Spillway Crest = 56.50
    Principal Spillway Crest = 55.00
    Dewatering Orifice Invert = 50.00
    Cleanout Elevation = 47.1
    Elevation of Upstream Toe of Dam or Excavated Bottom of "Wet Storage Area" (if excavation was performed) = 46.0

Rickmond Engineering, Inc.
Civil Engineering
Land Development
Surveying
Environmental Engineering
1643-C Merrimac Trail
Williamsburg, VA 23185
(804)229-1776 or 898-4149

Designed By: KMJ | Drawn By: KMJ | Scale: AS NOTED | Date: 8/6/97

COMMONWEALTH OF VIRGINIA
KM JENKINS II
No. 022672
PROFESSIONAL ENGINEER
8/6/97

No.	By	Revision	App.	Date
1	KMJ	REV PER COUNTY COMMENTS, TELECON 11/3/97	KMJ	11.3.97
2	KMJ	REV PER COUNTY COMMENTS LTR DTD 9/18/97	KMJ	9.11.97

THE VILLAGES AT WESTMINSTER
RETENTION PONDS
DETAIL SHEET
JAMES CITY COUNTY VIRGINIA

Job Number 96106 | Sheet No. S4

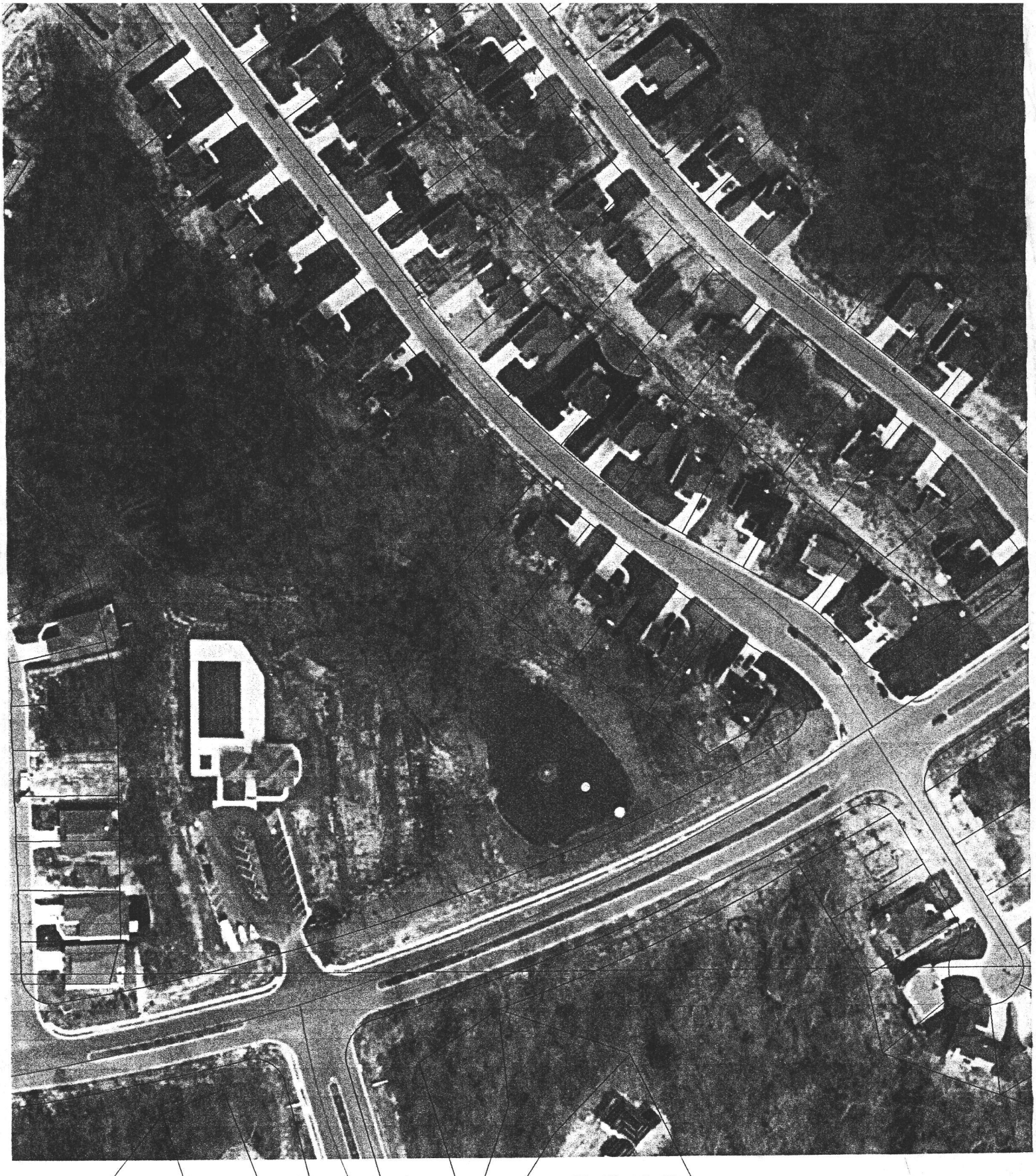

PARCEL "A"
VA. POWER
3.23 ACRES

100' GREENSPACE
BUFFER

EMENT

GLENWILTON

RECREATION
COMPLEX

PC 170

GABLETON

LOCATION OF
POND I

RICHMOND ROAD STATE RTE

APPROX. LOCATION
OF BUFFER

PLAN
SCALE: 1" = 300'

POND I + II PLAN (SP-100-97)

PHASE I - (S-59-96)

PHASE II+III - (S-89-97) LOTS 114-131
LOTS 132-147
LOTS 148-215

PHASE IV (S-74-98) LOTS 89-103
LOTS 216-274

Phase V (S-113-98) LOTS 275-382

100 YEAR FLOOD PLAIN DELINEATED HER
FIRM FLOOD INSURANCE RATE MAPS COM

RECREATION CENTER
OPEN FIELD S
TEMPORARY SOIL, STOCKPILE
AREA, STAGING, AND EQUIPMENT
STORAGE AREA FOR POND I CONSTRUCTION
SEE SP-90-97

POND I NARRATIVE & SEQUENCE OF CONSTRUCTION

1) POND #1 IS TO BE CONSTRUCTED AND COMPLETED AS A SEDIMENT BASIN PRIOR TO THE ONSET OF CONSTRUCTION FOR "THE VILLAGES AT WESTMINSTER RECREATION CENTER".
2) UPON COMPLETION OF #1, THE SEDIMENT TRAP & DIVERSION DIKES LOCATED BELOW THE PROPOSED FILL MAY BE DELETED FROM THE APPROVED PLANS OF THE ABOVE MENTIONED PROJECT.

POND I DEWATERING NOTES

1) 4' HIGH BERM TO BE CONSTRUCTED UPSTREAM OF PROPOSED POND TO PROVIDE BASIN TO PUMP WATER FROM (TO DEWATER THE POND SITE) TO THE OUTLET STRUCTURE.

NOTES:
1) WETLANDS DELINEATED BY DOMINION ENVIRONMENTAL CONSULTANTS, INC.
2) FILTER FABRIC TO LINE ALL SOIL TO RIP RAP SURFACES.
3) JUTE MESH TO BE PLACED ON ALL SIDES OF POND AS SOON AS FINAL GRADE IS ACHIEVED.
4) VDOT DOES NOT ASSUME RESPONSIBILITY FOR MAINTENANCE OF THE DETENTION/RETENTION POND OR ITS STRUCTURES, AND SHALL BE SAVED HARMLESS FROM ANY DAMAGE.
5) THE CONSTRUCTION ENTRANCE FOR POND II WILL BE THE SAME CE USED FOR ROANE RIDGE SINCE THE PROJECTS WILL BE CONSTRUCTED SIMULTANEOUSLY. APPROVAL OF ROANE RIDGE SITE PLAN IS REQUIRED PRIOR TO THE CONSTRUCTION OF POND #2.
6) THE CONSTRUCTION ENTRANCE FOR THE RECREATION CENTER WILL BE USED AS THE INGRESS / EGRESS POINT FOR THE CONSTRUCTION OF POND I.
7) RECORD DRAWINGS WILL BE PROVIDED FOR THE RETENTION BASINS UPON COMPLETION. UPON COMPLETION THE CONSTRUCTION OF THE DAM WILL BE CERTIFIED BY A PROFESSIONAL ENGINEER WHO HAS INSPECTED THE STRUCTURE DURING CONSTRUCTION.
8) POND I & II TO BE CONSTRUCTED IN ACCORDANCE WITH THE RECOMMENDATIONS OF "FINAL REPORT GEOTECHNICAL ENGINEERING SERVICES STORM WATER MANAGEMENT DETENTION BASINS THE VILLAGES AT WESTMINSTER", FES PROJECT NO: 1-701218.001, DATED 10/6/97.

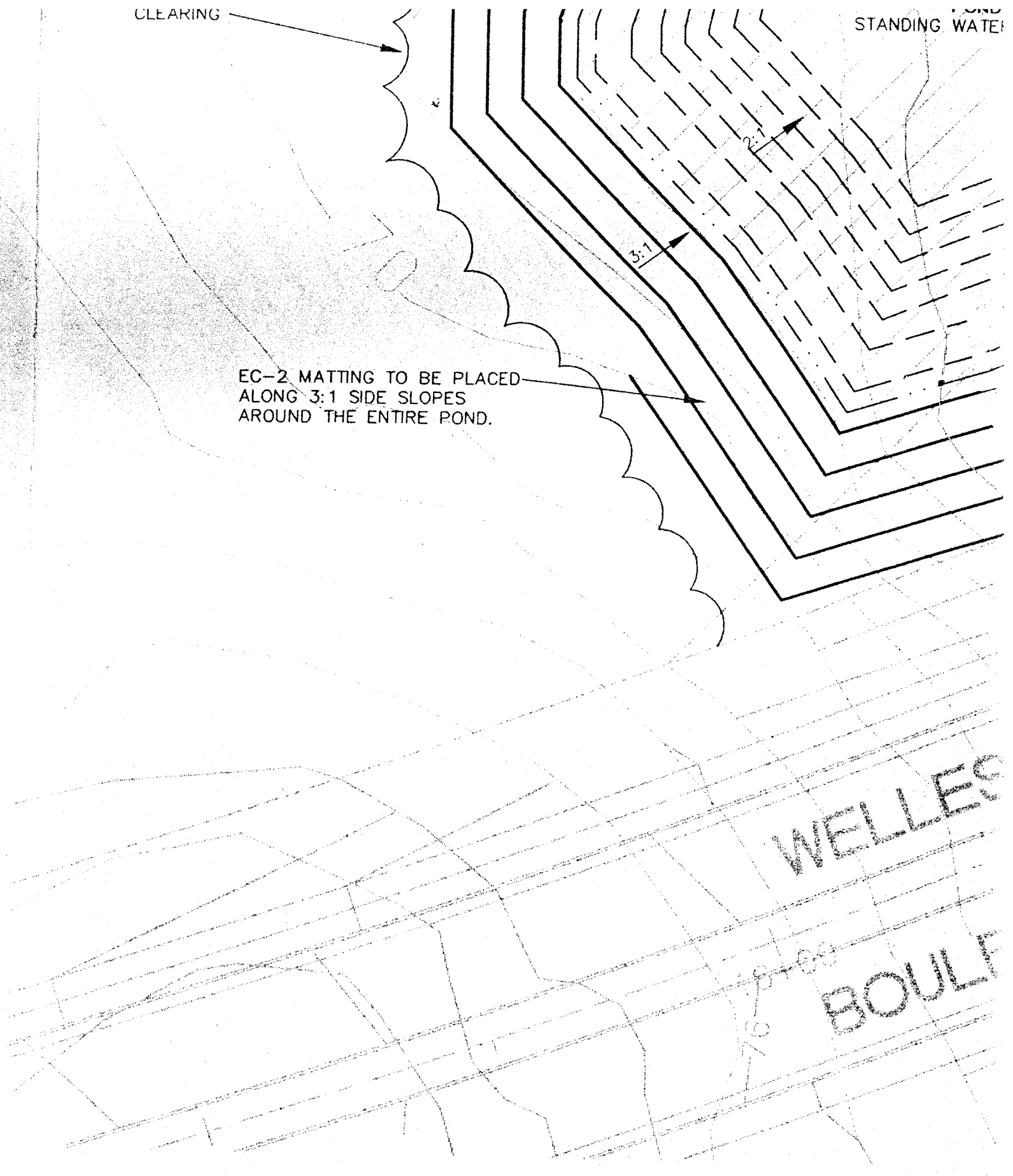

87

88

LIMITS OF
WETLANDS

LOPE
REAM

LIMITS OF
CLEARING

60

POND 1
STANDING WATER ELEV 61.0

EX ES-1
INV 58.00

3:1

3:1

EC-2 MATTING TO BE PLACED
ALONG 3:1 SIDE SLOPES
AROUND THE ENTIRE POND.

REMOVE EXISTING ES-1
AND INSTALL:
66" RCP RISER W/
95" ANTI-VORTEX DEVICE
TOP 64.50
10"ø ORIFICE INV 61.00

EC-2 MATTING TO BE PLACED
ALONG 3:1 SIDE SLOPES
AROUND THE ENTIRE POND.

REMOVE EXISTING ES-1
AND INSTALL:
66" RCP RISER W/
95" ANTI-VORTEX DEVICE
TOP 64.50
10"ø ORIFICE INV 61.00

POND 1
STANDING WATER ELEV 61.0

EX ES-1
INV 58.00

ELEV 60-6' WIDE SAFETY BENCH

Concrete ANTI-SEEP COLLAR TO EXTEND
36" OUTSIDE LIMITS OF PIPE ON
BOTTOM & SIDES AND 24" ABOVE.
LOCATED 19' DOWNSTREAM FROM
CENTER OF 66" RISER.

TO BE PLACED
E SLOPES
NTIRE POND.

EXISTING 190' OF 48" RCP

WELLESLEY

EVARD

EX ES-1
INV 56.25

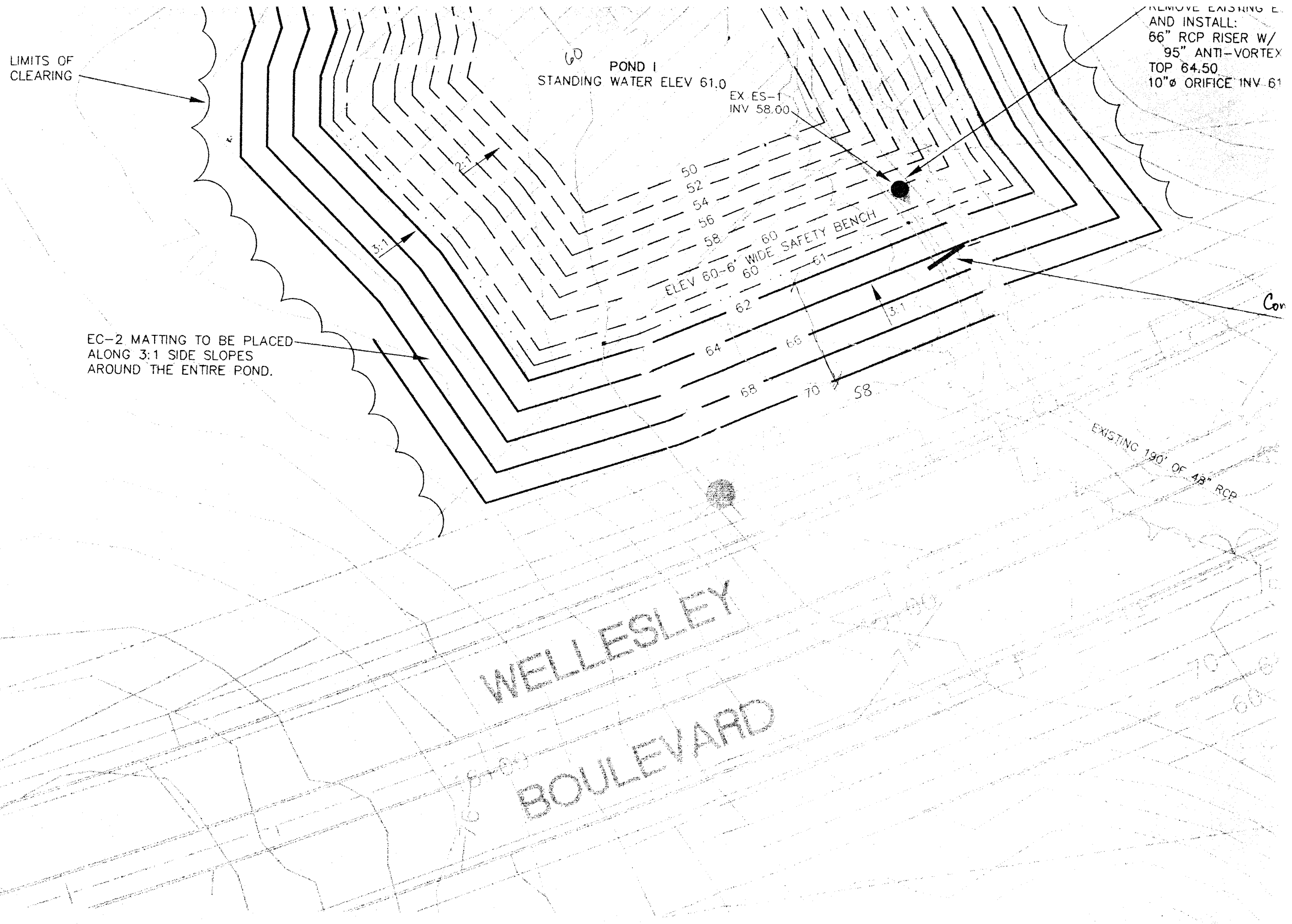

, INC.

USED FOR
NEOUSLY.

N

JPON
WILL
THE

MENDATIONS
ATER

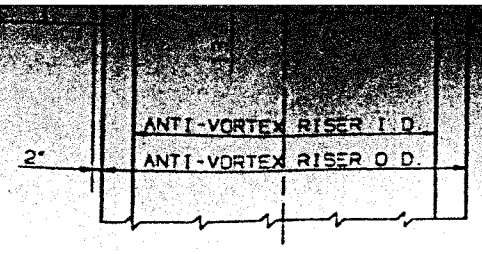

SECTION

CP&P

Technical Manual page 14.1

PRECAST ANTI-VORTEX DEVICE (CAP AND RISER)	ORIGINAL DATE	02-01-95	RCH
	LAST REVISION		
	SCALE	3/8 = 1'-0"	
CONCRETE PIPE & PRODUCTS CO., INC.	TOPIC - PROJECT # - DRAWING #		
P.O. Box 1223 ☐ Richmond, Virginia 23209 ☐ 804-233-5471	ST-0847-63		

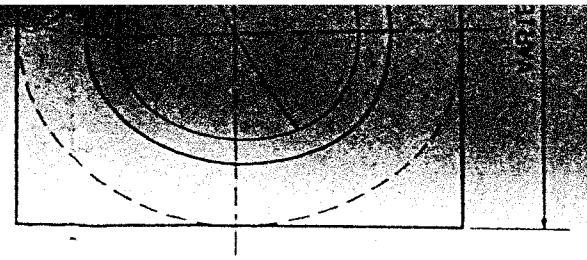

END VIEW

CP&P

Technical Manual page 14.4

ANTI-SEEP COLLAR	ORIGINAL DATE	02-01-95	RCH
	LAST REVISION		
	SCALE	3/8 = 1'-0"	
CONCRETE PIPE & PRODUCTS CO., INC.	TOPIC - PROJECT # - DRAWING #		
P.O. Box 1223 ☐ Richmond, Virginia 23209 ☐ 804-233-5471	ST-1087-70		

POND I

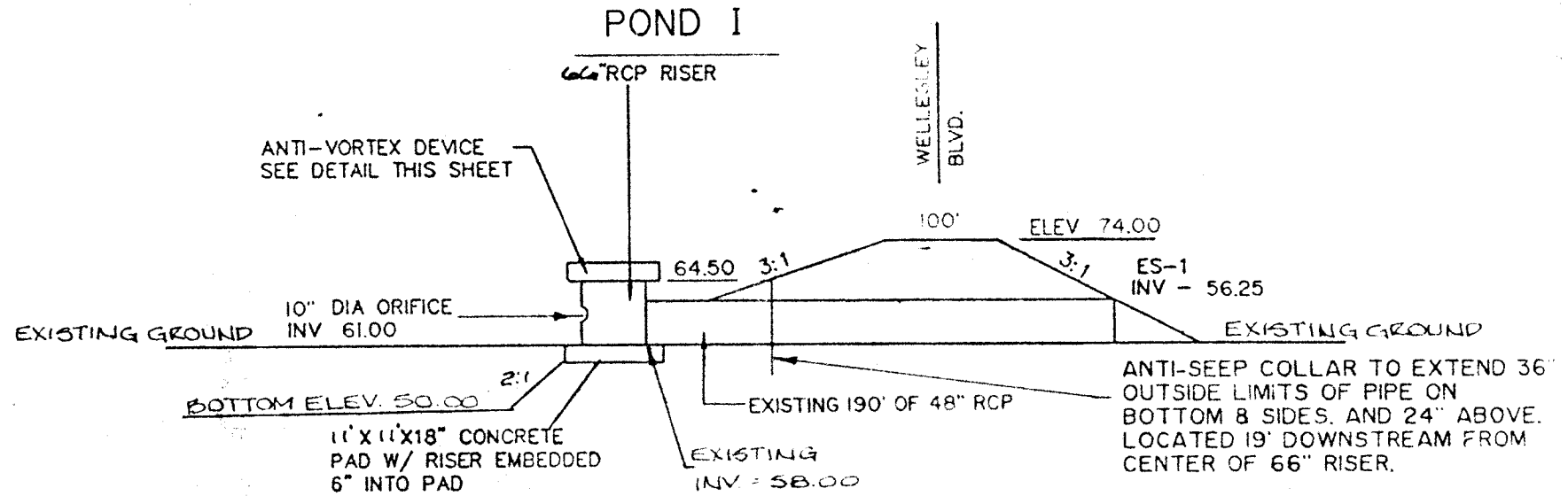

POND OUTLET STRUCTURE

POND ELEVATIONS

TOP ELEVATION	74.00
100 YR STORM ELEVATION	66.49
2 YR STORM ELEVATION	63.99
STANDING WATER ELEVATION	61.00

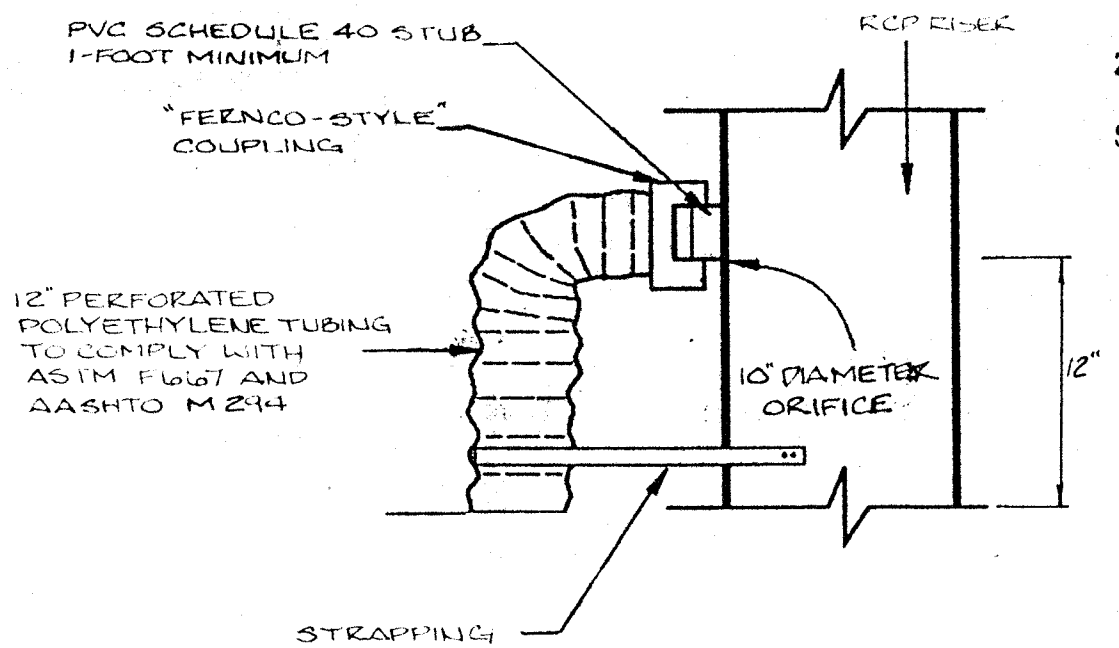

10" DIAMETER ORIFICE TRASH PROTECTION

GENERAL NOTES:

1. ALL CONSTRUCTION SHALL CONFORM TO CURRENT CITY/COUNTY AND/OR VDOT STANDARDS AND SPECIFICATIONS UNLESS OTHERWISE SPECIFIED.
2. CONTRACTOR SHALL SECURE THE LATEST EDITION OF THE VIRGINIA EROSION AND SEDIMENT CONTROL HANDBOOK AND COMPLY WITH ALL COUNTY REQUIREMENTS FOR EROSION AND SEDIMENT CONTROL.
3. ALL CUTS, VEGETATION AND DELETERIOUS MATERIAL ENCOUNTERED SHALL BE REMOVED AND DISPOSED OF OFF SITE.
4. SELECT MATERIAL REQUIRED FOR FILL AND BACKFILL UNDER PARKING LOT, FOOTINGS AND STRUCTURES. IT SHALL BE PLACED IN LAYERS NOT TO EXCEED EIGHT INCHES (8") IN THICKNESS AND COMPACTED TO 95% OF MAXIMUM DENSITY AS DETERMINED BY ASTM D-698.
5. ALL CONCRETE SHALL BE CLASS A-3 AIR ENTRAINED (3000 PSI).
6. ALL GREEN AREA, WITHIN LIMITS OF CONSTRUCTION, TO BE TOPSOILED, FERTILIZED AND MULCHED.
7. CONTRACTOR SHALL OBTAIN AT HIS OWN EXPENSE, ANY PERMIT OR BOND IF REQUIRED BY ANY GOVERNMENT AGENCY.
8. CONTRACTOR SHALL BE RESPONSIBLE FOR LOCATION, PROTECTING, AND RESOLVING ANY CONFLICTS WITH EXISTING UTILITIES AND SHALL REPAIR, AT HIS OWN EXPENSE, ALL UTILITIES TO BE RELOCATED OR DAMAGED BY CONSTRUCTION.
9. ANY ERRORS OR DESCREPANCIES SHALL BE REPORTED TO THE ARCHITECT OR THE SURVEYOR BEFORE PROCEEDING WITH THE WORK.
10. DEWATERING OR EXCAVATION, IF NEEDED, IS PART OF THIS CONTRACT
11. BEFORE DIGGING CALL "MISS UTILITY" OF VIRGINIA 1-800-552-7001.
12. CONTRACTOR SHALL OBTAIN PERMITS FROM THE STATE HIGHWAY DEPARTMENT PRIOR TO ANY WORK IN THE STATE'S RIGHT-OF -WAY. THE CONTRACTOR TO RESTORE AND CLEAN UP THE SITE TO THE SATISFACTION OF THE HIGHWAY DEPARTMENT.
13. CONTRACTOR MUST OBTAIN ALL NECESSARY BUILDING PERMITS PRIOR TO CONSTRUCTION.

END-SECTION 12"-60" PIPE

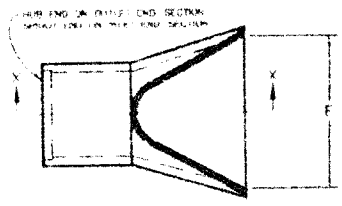

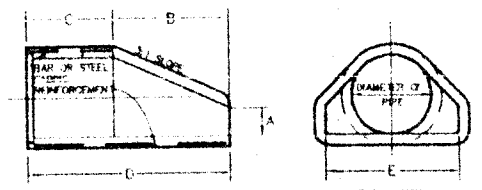

END-SECTION DIMENSIONS

DIAM.	A	B	C	D	E
12"	4"	2'-0"	2'-0"	4'-0"	2'-0"
18"	6"	2'-3"	1'-6"	4'-0"	2'-6"
24"	8"	3'-3"	1'-8"	4'-0"	3'-0"
30"	9-1/2"	4'-1"	2'-6"	4'-1"	4'-0"
36"	11'-0"	4'-6"	1'-7-3/4"	4'-1-3/4"	4'-0"
48"	1'-3"	5'-3"	2'-10-3/4"	4'-1-3/4"	6'-0"
42"	1'-9"	6'-3"	2'-11"	8'-2"	6'-6"
48"	2'-0"	6'-6"	3'-3"	8'-2"	7'-0"
54"	2'-3"	6'-6"	2'-9-1/4"	8'-2-1/4"	7'-6"
60"	2'-6"	6'-0"	3'-3"	8'-0"	8'-0"

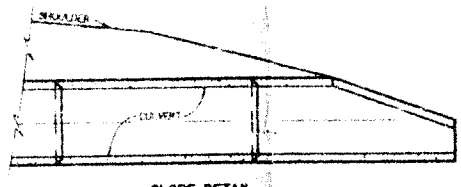

FLARED END-SECTIONS FOR CONC

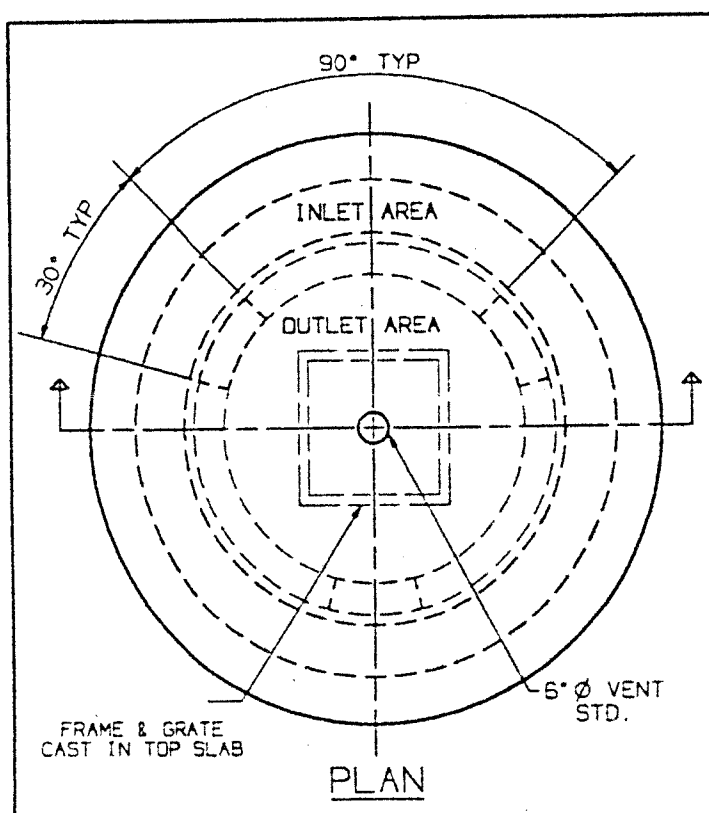

NOTE:

1. ANTI-VORTEX DEVICE (CAP AND RISER) MANUFACTURED IN ACCORDANCE WITH ASTM C478.
2. DIMENSIONS SUBJECT TO PERMISSIBLE VARIATIONS OF ASTM C478.
3. INLET AREA (AREA BETWEEN DEVICE I.D. AND RISER O.D.) IS GREATER THAN OUTLET AREA (AREA OF RISER I.D.)
4. SLAB REINFORCEMENT TO BE ASTM A615 #4 BARS @ 8" E.W. CIRCUMFERENTIAL REINFORCEMENT TO BE Asc = 1 @ 0.150 2x6 W2.5 x W2.5 WWF MINIMUM. MATERIAL PROPERTIES: fy = 60 ksi, fc = 4 ksi. CONCRETE COVER OVER REINFORCEMENT (CCOR) = 1", UNLESS NOTED
5. DI-1 FRAME & GRATE IS AVAILABLE FOR 48" I.D. RISERS AND LARGER.

RISER I.D.	RISER O.D.	ANTI-VORTEX CAP I.D.	ANTI-VORTEX CAP O.D.	NOTCH DIAMETER	APPROX. CAP WEIGHT
24"	30"	48"	58"	34"	1.49 T
27"	33½"	60"	70" OR 72"	37½"	2.28 T
30"	37"	60"	70" OR 72"	41"	2.26 T
36"	44"	60"	70" OR 72"	48"	2.22 T
42"	51"	72"	85"	55"	3.16 T
48"	58"	84"	100"	62"	4.27 T
54"	65½"	84"	100"	70½"	4.20 T
60"	72"	96"	114"	76"	5.48 T
66"	80½"	96"	114"	84½"	5.39 T
72"	86"	108"	128"	90"	6.83 T
78"	94½"	126"	147"	98½"	8.97 T
84"	100"	126"	147"	104"	8.90 T

CP&P

Technical Manual page 14.1

PRECAST ANTI-VORTEX DEVICE (CAP AND RISER)

CONCRETE PIPE & PRODUCTS CO., INC.
P.O. Box 1223 □ Richmond, Virginia 23209 □ 804-233-5471

ORIGINAL DATE	02-01-95	RCH
LAST REVISION		
SCALE	3/8 = 1'-0"	
TOPIC - PROJECT # - DRAWING #	ST-0847-63	

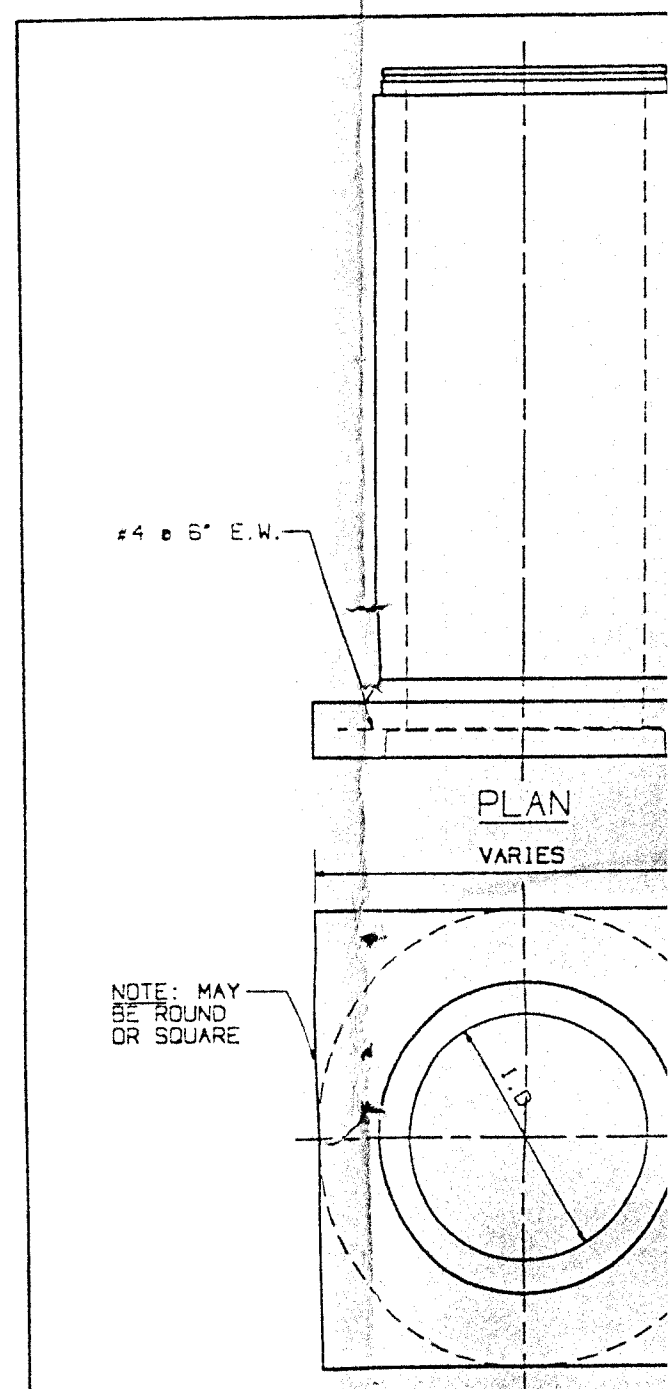

ANTI-SEEP COLLAR

CONCRETE PIPE & PRODUCTS CO.
P.O. Box 1223 □ Richmond, Virginia 23209 □

POND I

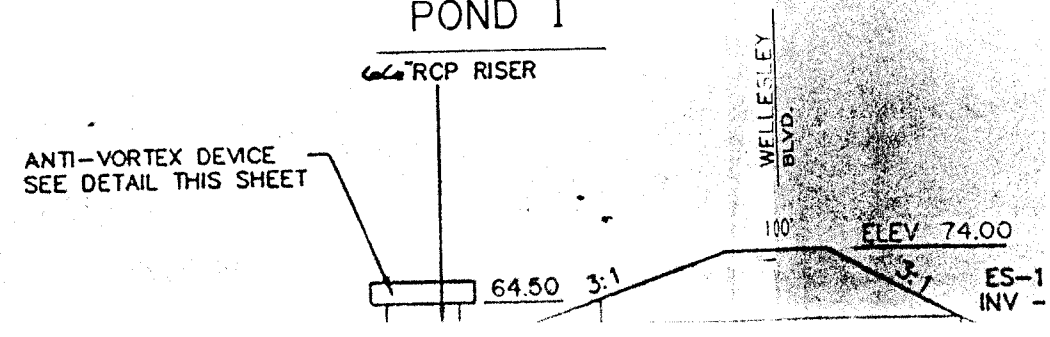

ENVIRONMENTAL – STORMWATER TRANSMITTAL

PROTECTING RESOURCES PRIDE IN DELICATE ENVIRONMENTS

James City County Jamestown 1607

COUNTY PLAN NO: SP-100-97

BMP ID CODE: PC170

WATERSHED: Powhatan Creek

☑ **ENTIRE RECORD FILE** * Additional file for Villages of Westminster *

☐ **ASBUILTS**

☐ **CONSTRUCTION CERTIFICATION**

☐ **COMPUTATIONS**

☐ **OTHER:** _____

NAME: Tina Cooke

SIGNATURE: Tina Cooke

DATE: 8/1/08

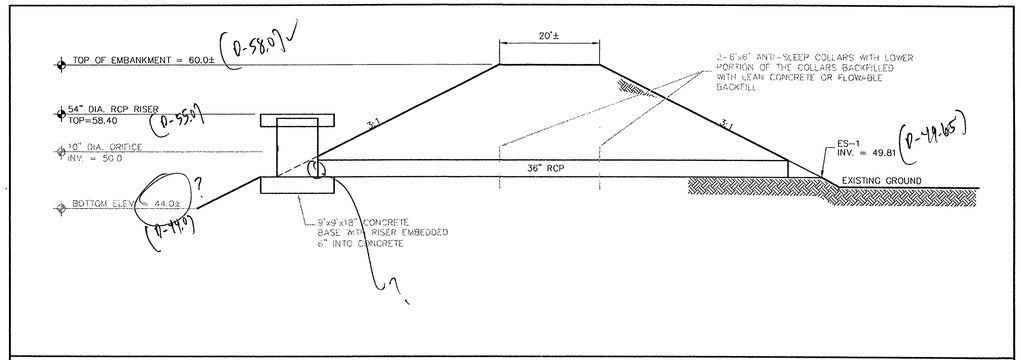

POND OUTLET STRUCTURE

NOT TO SCALE

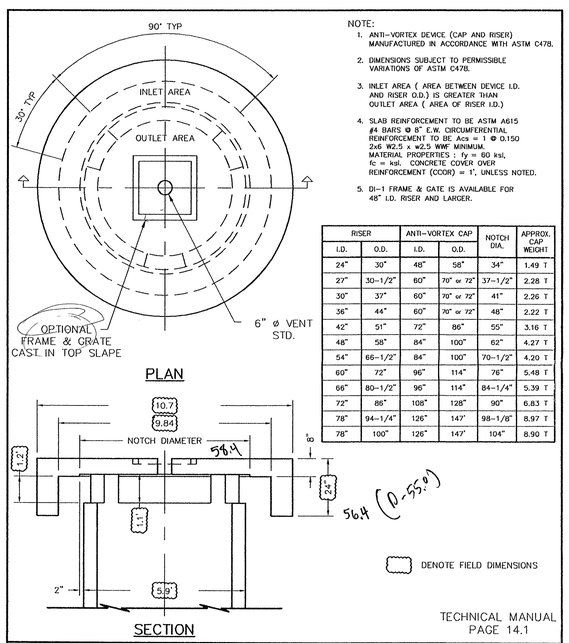

NOTE:

1. ANTI-VORTEX DEVICE (CAP AND RISER) MANUFACTURED IN ACCORDANCE WITH ASTM C478.
2. DIMENSIONS SUBJECT TO PERMISSIBLE VARIATIONS OF ASTM C478.
3. INLET AREA (AREA BETWEEN DEVICE I.D. AND RISER O.D.) IS GREATER THAN OUTLET AREA (AREA OF RISER I.D.)
4. SLAB REINFORCEMENT TO BE ASTM A615 #4 BARS @ 8" E.W. CIRCUMFERENTIAL REINFORCEMENT TO BE Acs = 1 @ 0.150 2x6 W2.5 x W2.5 WWF MINIMUM. MATERIAL PROPERTIES : fy = 60 ksi, fc = ksi. CONCRETE COVER OVER REINFORCEMENT (COVR) = 1", UNLESS NOTED.
5. DI-1 FRAME & GATE IS AVAILABLE FOR 48" I.D. RISER AND LARGER.

RISER		ANTI-VORTEX CAP		NOTCH DIA.	APPROX. CAP WEIGHT
I.D.	O.D.	I.D.	O.D.		
24"	30"	48"	58"	34"	1.49 T
27"	30-1/2"	60"	70" or 72"	37-1/2"	2.28 T
30"	37"	60"	70" or 72"	41"	2.26 T
36"	44"	60"	70" or 72"	48"	2.22 T
42"	51"	72"	86"	55"	3.16 T
48"	58"	84"	100"	62"	4.27 T
54"	66-1/2"	84"	100"	70-1/2"	4.20 T
60"	72"	96"	114"	76"	5.48 T
66"	80-1/2"	96"	114"	84-1/4"	5.39 T
72"	86"	108"	128"	90"	6.83 T
78"	94-1/4"	126"	147"	98-1/8"	8.97 T
78"	100"	126"	147"	104"	8.90 T

TECHNICAL MANUAL PAGE 14.1

PRECAST ANTI-VORTEX DEVICE (CAP AND RISER)	ORIGINAL DATE	02-01-95	RCH
	LAST REVISION		
	SCALE	N.T.S.	
GIFFORD-HILL CONCRETE PRODUCTS	TOPIC - PROJECT # - DRAWING #		
2900 Terminal Ave. • Richmond, Virginia 23234 • 804-233-5471	ST-0847-63		

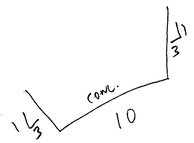

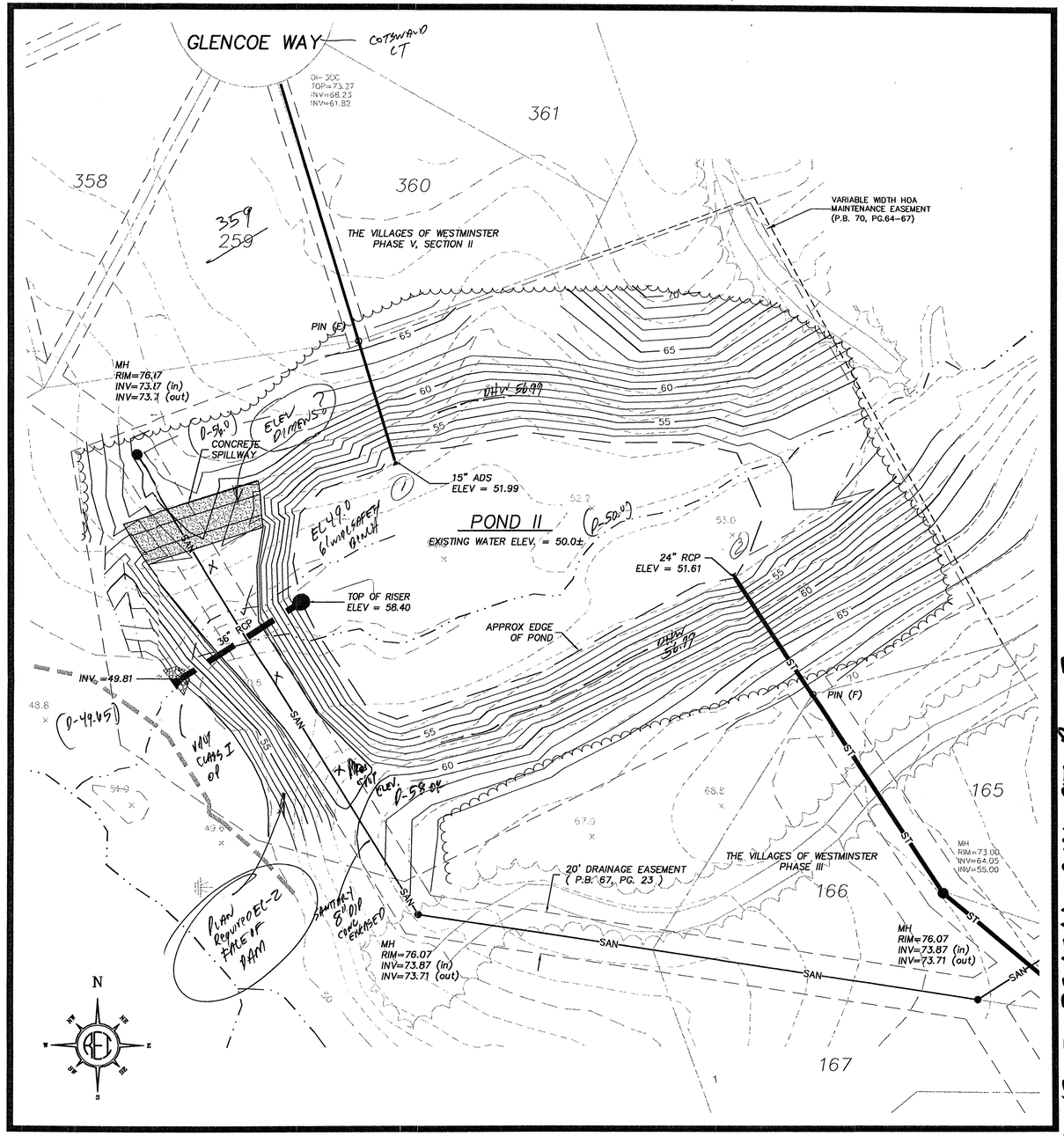

GRAPHIC SCALE

30 0 15 30 60 120

(IN FEET)
1 inch = 30 ft.

GAM 322400057
MARSHALL ASSOCIATES LLC
19 YORKTOWN OC
SUITE C
NN VA 23606
R2

Subdiv Lot 359 Cotswold Court

Design 7
A= 56.4 ac
Impl. AREA = 10.35 Ac.
WQv 77400 CF
Bottom EL 44.0 (D)

Tc = 1.01 hrs,
CN = 65

2-YR IN 179.90 cfs OUT 52.46 cfs W.S.EL 53.66
100-YR IN 114.57 cfs 97.39 cfs 56.99

- NO CL
- NO FORMS
- O Riser CREST ELEV.
- O ES CREST EL & DIMENSIONS
- O OP
- O LABEL SS Stone Dam
- O COTSWOLD CT, LOT 359
- O

SJT REVIEW SET PC171; SP#00-97 POND 2

Rickmond Engineering, Inc.
Engineering Surveying Land Planning
1643 Merrimac Trail Vint Hill • P.O. Box 861647
Williamsburg, VA 23185 Warrenton, VA 20187
Voice: (757)229-1776 Voice: (540)349-7730
Fax: (757)229-4683 Fax: (540)349-7731
www.rickmond.com

Designed By: CBD
Drawn By: RJH
Scale: 1"=30'
Date: 03.06.01

COMMONWEALTH OF VIRGINIA
CRAIG B. DAVENPORT
No. 002055
3.06.01
LAND SURVEYOR

No.	By	Revision	Date	App.

THE VILLAGES AT WESTMINSTER
RECORD DRAWING OF POND II

JAMES CITY COUNTY VIRGINIA

Job Number	Sheet No.
01111	1 of 1

BEFORE DIGGING CALL "MISS UTILITY" OF VIRGINIA AT 1-800-552-7001

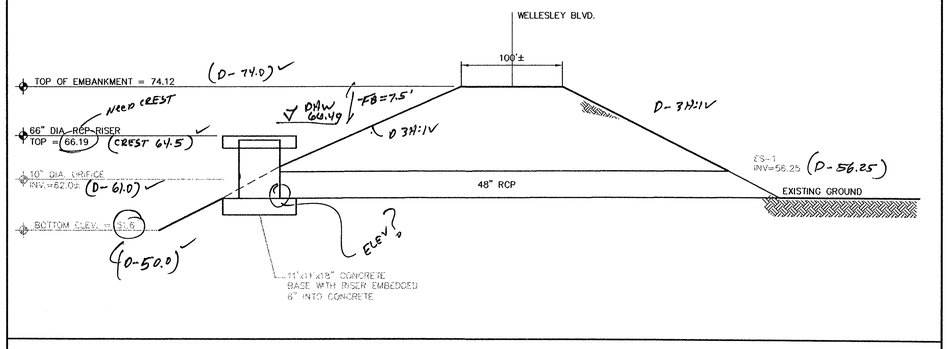

POND OUTLET STRUCTURE

NOT TO SCALE

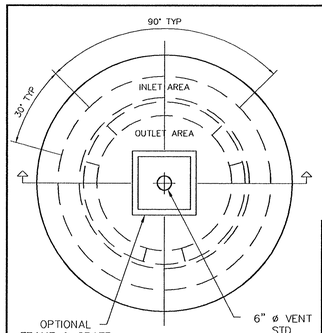

PLAN

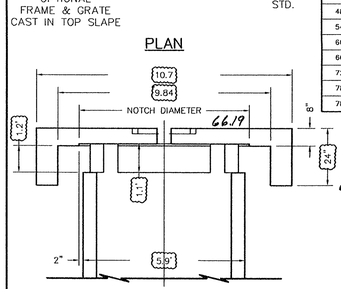

SECTION

NOTE:

1. ANTI-VORTEX DEVICE (CAP AND RISER) MANUFACTURED IN ACCORDANCE WITH ASTM C478.
2. DIMENSIONS SUBJECT TO PERMISSIBLE VARIATIONS OF ASTM C478.
3. INLET AREA (AREA BETWEEN DEVICE I.D. AND RISER O.D.) IS GREATER THAN OUTLET AREA (AREA OF RISER I.D.)
4. SLAB REINFORCEMENT TO BE ASTM A615 #4 BARS @ 8" E.W. CIRCUMFERENTIAL REINFORCEMENT TO BE Acs = 1 @ 0.150 2x6 W2.5 x w2.5 WWF MINIMUM. MATERIAL PROPERTIES : fy = 60 ksi, fc = ksi. CONCRETE COVER OVER REINFORCEMENT (CCOR) = 1", UNLESS NOTED.
5. DI-1 FRAME & GATE IS AVAILABLE FOR 48" I.D. RISER AND LARGER.

RISER		ANTI-VORTEX CAP		NOTCH DIA.	APPROX. CAP WEIGHT
I.D.	O.D.	I.D.	O.D.		
24"	30"	48"	58"	34"	1.49 T
27"	30-1/2"	60"	70" or 72"	37-1/2"	2.28 T
30"	37"	60"	70" or 72"	41"	2.26 T
36"	44"	60"	70" or 72"	48"	2.22 T
42"	51"	72"	86"	55"	3.16 T
48"	58"	84"	100"	62"	4.27 T
54"	66-1/2"	84"	100"	70-1/2"	4.20 T
60"	72"	96"	114"	76"	5.48 T
66"	80-1/2"	96"	114"	84-1/4"	5.39 T
72"	88"	108"	128"	90"	6.83 T
78"	94-1/4"	126"	147"	98-1/8"	8.97 T
78"	100"	126"	147"	104"	8.90 T

TECHNICAL MANUAL PAGE 14.1

PRECAST ANTI-VORTEX DEVICE (CAP AND RISER)

GIFFORD-HILL CONCRETE PRODUCTS

2900 Terminal Ave. • Richmond, Virginia 23234 • 804-233-5471

ORIGINAL DATE	02-01-95 RCH
LAST REVISION	
SCALE	N.T.S.
TOPIC - PROJECT # - DRAWING #	ST-0847-63

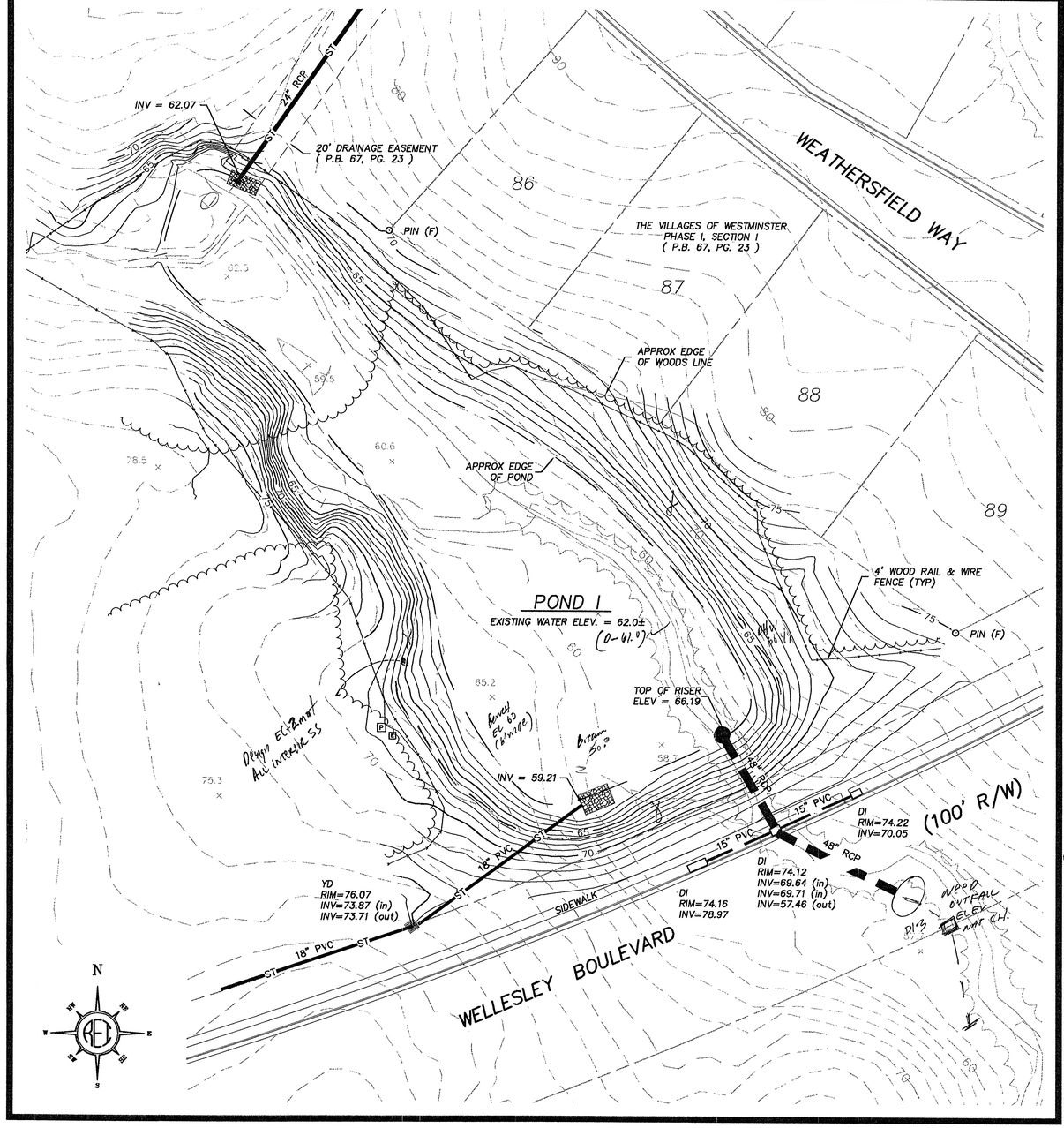

GRAPHIC SCALE

30 0 15 30 60 120

(IN FEET)
1 inch = 30 ft.

GPIN 3221000001A
Villages at Westminster HA
2 Eaton St
Hampton, VA 23669-4054
R2
Owner P-1 Sec I Vewest
Wellesley Blvd.
Location: (Right (West of) 620 Weatherfield Way
Lot 89 Pt, Sec I Vewest.

PA = 63.6 AC.
IMP = 14.70 Ac.
Post Dev
Tc = 0.77 hr.
CN = 66

	IN	OUT	EL
2-YR	26.36 CFS	4.75 CFS	63.994
100-YR	159.35 CFS	135.58 CFS	66.49

- Need Forms
- Need CC
- Need EL outfall barrel & nat channel
- Need Riser Crest ELEV
- Need Riser Invert
- US barrel EL.
- Label Bench

SIT REVIEW SET; PC 170; SP-110-97

BEFORE DIGGING CALL "MISS UTILITY" OF VIRGINIA AT 1-800-552-7001

Rickmond Engineering, Inc.
Engineering Surveying Land Planning
1643 Merrimac Trail Vint Hill - P.O. Box 861647
Williamsburg, VA 23185 Warrenton, VA 20187
Voice: (757)229-1776 Voice: (540)349-7730
Fax: (757)229-4683 Fax: (540)349-7731
www.rickmond.com

Checked By: CBD
Drawn By: RJH
Scale: 1"=30'
Date: 03.06.01

COMMONWEALTH OF VIRGINIA
CRAIG B. DAVENPORT
No. 002055
3.06.01
LAND SURVEYOR

No.	By	Revision	Date	App.

THE VILLAGES AT WESTMINSTER
RECORD DRAWING OF POND I
JAMES CITY COUNTY VIRGINIA

Job Number	Sheet No.
01110	1 of 1