CERTIFICATE OF AUTHENTICITY

THIS IS TO CERTIFY THAT THE FOLLOWING ELECTRONIC RECORDS ARE TRUE AND ACCURATE REPRODUCTIONS OF THE ORIGINAL RECORDS OF JAMES CITY COUNTY GENERAL SERVICES DEPARTMENT- STORMW ATER DIVISION; WERE SCANNED IN THE REGULAR COURSE OF BUSINESS PURSUANT TO GUIDELINES ESTABLISHED BY THE LIBRARY OF VIRGINIA AND ARCHIVES; AND HA VE BEEN VERIFIED IN THE CUSTODY OF THE INDIVIDUAL LISTED BELOW.

BMPNUMBER: **PC182**

DATE VERIFIED: **June 13, 2016**

QUALITY ASSURANCE TECHNICIAN: **Charles E. Lovett II**

LOCATION: WILLIAMSBURG, VIRGINIA

Stormwater Division

MEMORANDUM

DATE: March 13, 2010

TO: Michael J. Gillis, Virginia Correctional Enterprises Document Management Services

FROM: Jo Anna Ripley, Stormwater

PO: 270712

RE: Files Approved for Scanning

General File ID or BMP ID: PC182

PIN: 3140100003

Subdivision, Tract, Business or Owner Name (if known): Williamsburg Montessori School

Property Description: Educational Facility

Site Address: 4202 Longhill Road

(For internal use only) **Box** 5 **Drawer:** 3

Agreements: (in file as of scan date) **N** **Book or Doc#:** **Page:**

Comments

Date Record Created:

Created By:

WS_BMPNO: PC182

PRINTED ON
Thursday, March 04, 2010
4:26:38 PM

WATERSHED	PC
BMP ID NO	182
PLAN NO	SP-26-01
TAX PARCEL	(31-4)(1-3)
PIN NO	3140100003
CONSTRUCTION DATE	10/30/2001
PROJECT NAME	Williiamsburg Montessori School
FACILITY LOCATION	4214 Longhill Road
CITY-STATE	Williamsburg, Va. 23188
CURRENT OWNER	Williamsburg Montessori School
OWNER ADDRESS	4214 Longhill Road
OWNER ADDRESS 2	
CITY-STATE-ZIP CODE	Williamsburg, Va. 23188
OWNER PHONE	565-0977
MAINT AGREEMENT	Yes
EMERG ACTION PLAN	No

Get Last BMP No | Return to Menu | Print Record

MAINTENANCE PLAN	Yes	CTRL STRUC DESC	CPP Perf
SITE AREA acre	0.924	CTRL STRUC SIZE Inches	6
LAND USE	R8 School	OTLT BARRL DESC	CPP Drain
old BMP TYP	Sand Filter	OTLT BARRL SIZE Inch	6
JCC BMP CODE	D2 Surface Sand Filter		
POINT VALUE	8	EMERG SPILLWAY	Yes
		DESIGN HW ELEV	63.76
		PERM POOL ELEV	na
SVC DRAIN AREA acres	0.43	2-YR OUTFLOW cfs	2.86
		10-YR OUTFLOW cfs	4.22
		REC DRAWING	Yes
SERVICE AREA DESCRI	Parking Lot, Building & Offsite area		
IMPERV AREA acres	0.27	CONSTR CERTIF	No
RECV STREAM	UT of Powhatan Creek		
EXT DET-WQ-CTRL	Yes	LAST INSP DATE 3/3/2003	Inspected by:
WTR QUAL VOL acre-ft	0.05	INTERNAL RATING	3
CHAN PROT CTRL	No	MISC/COMMENTS	
CHAN PROT VOL acre-ft	0	Parking lot expansion. Sand filter, pretreatment and detention basin components.	
SW/FLOOD CONTROL	Yes		
GEOTECH REPORT	No		

Additional Comments:

RECORD DRAWING CERTIFICATION

I HEREBY CERTIFY TO THE BEST OF MY KNOWLEDGE AND BELIEF THAT THIS RECORD DRAWING REPRESENTS THE ACTUAL CONDITION OF THE STORMWATER MANAGEMENT/BMP FACILITY. THE FACILITY APPEARS TO CONFORM WITH THE PROVISIONS OF THE APPROVED DESIGN PLAN, EXCEPT AS SPECIFICALLY NOTED.

COMMONWEALTH OF VIRGINIA
MICHAEL H. BALLARD
No. 035107
9/10/03
PROFESSIONAL ENGINEER

CONSTRUCTION CERTIFICATION

I HEREBY CERTIFY TO THE BEST OF MY KNOWLEDGE AND BELIEF THAT THIS STORMWATER MANAGEMENT/BMP FACILITY WAS MONITORED AND CONSTRUCTED IN ACCORDANCE WITH THE PROVISIONS OF THE APPROVED DESIGN PLAN, SPECIFICATIONS AND STORMWATER MANAGEMENT PLAN, EXCEPT AS SPECIFICALLY NOTED.

COMMONWEALTH OF VIRGINIA
MICHAEL H. BALLARD
No. 035107
9/10/03
PROFESSIONAL ENGINEER

SAND FILTER MAINTENANCE PLAN

1. SEDIMENT SHALL BE CLEANED OUT OF THE SEDIMENTATION CHAMBER WHEN IT ACCUMULATES TO A DEPTH OF MORE THAN 12 INCHES.

2. VEGETATION WITHIN THE SEDIMENTATION CHAMBER SHALL BE LIMITED TO A HEIGHT OF 18 INCHES.

3. THE SAND FILTER OUTLET DEVICES SHALL BE CLEANED/REPAIRED WHEN DRAWDOWN TIMES EXCEED 36 HOURS.

4. TRASH AND DEBRIS SHALL BE REMOVED AS NECESSARY. THE PLASTIC BASIN WILL CAPTURE SEDIMENT AND DEBRIS AND MUST BE CLEANED ON A REGULAR BASIS.

5. SILT/SEDIMENT SHALL BE REMOVED FROM THE FILTER BED WHEN THE ACCUMULATION EXCEEDS ONE INCH. WHEN THE FILTERING CAPACITY OF THE FILTER DIMINISHES SUBSTANTIALLY (I.E., WHEN WATER PONDS ON THE SURFACE OF THE FILTER BED FOR MORE THAN 48 HOURS), THE TOP FEW INCHES OF DISCOLORED MATERIAL SHALL BE REMOVED AND REPLACED WITH FRESH MATERIAL. THE REMOVED SEDIMENTS SHOULD BE DISPOSED OF IN AN ACCEPTABLE MANNER (I.E., LANDFILL).

6. GRASS COVER OF SURFACE SAND FILTER SHOULD BE MOWED A MINIMUM OF 3 TIMES PER GROWING SEASON TO MAINTAIN MAXIMUM GRASS HEIGHTS LESS THAN 12 INCHES.

7. DIRECT MAINTENANCE ACCESS SHALL BE PROVIDED TO THE FILTER.

8. BMP SHOULD BE INSPECTED ON AN ANNUAL BASIS TO ENSURE PROPER PERFORMANCE.

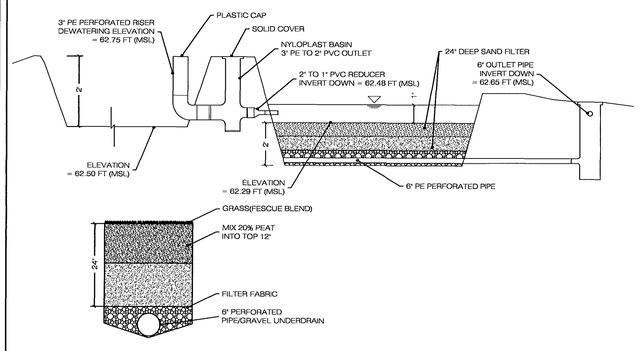

DETAIL: ~~SAND FILTER SECTION~~

NTS

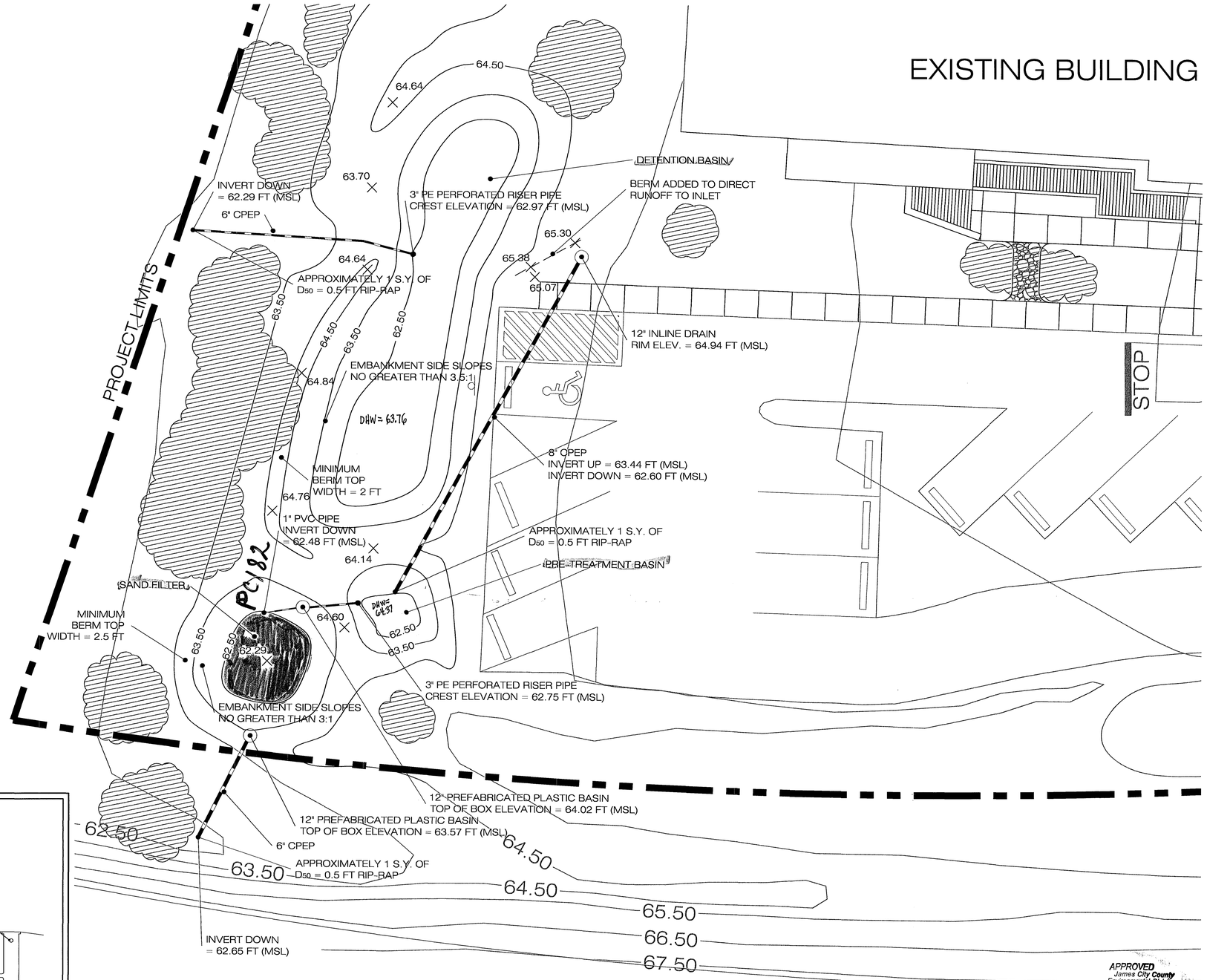

APPROVED
James City County
Environmental Division
By: [signature]
Date: 9-12-03

APPROVED
James City County
Environmental Division
By: [signature]
Date: 9/9/03

RECORD DRAWING

JAMES CITY COUNTY
BMP ID CODE:
PC 182

JAMES CITY COUNTY
PLAN NUMBER:
SP-26-01

CONTOUR INTERVAL = 1 FOOT

8' 0' 4' 8' 16' 24'

3200 Easter Circle
Williamsburg, Virginia 23188
(757) 220-6869

7401 Beaufont Springs Drive, Suite 205
Richmond, Virginia 23225
(804) 267-3474

46030 Manekin Plaza, Suite 160
Sterling, Virginia 20166
(703) 406-3360

WILLIAMSBURG ENVIRONMENTAL GROUP, INC.
Environmental Consultants

SEP 2003
RECEIVED
ENVIRONMENTAL DIVISION

BMP AS-BUILT
WILLIAMSBURG MONTESSORI SCHOOL
JAMES CITY COUNTY, VIRGINIA

COMMONWEALTH OF VIRGINIA
MICHAEL H. BALLARD
No. 035107
9/10/03
PROFESSIONAL ENGINEER

REVISIONS:

DATE:	REVISIONS MADE PER COUNTY COMMENTS
9/10/03	

DRAWN BY: JGM
DESIGNED BY: JGM
DATE: 01/09/03
CHECKED BY: MHB
SHEET: A1
JOB#: 1327

SP-26-01; PC 182

I:\1300s\1327-Montessori School Expansion\Stormwater\BMP As-Built\As-built.dwg

WILLIAMSBURG
ENVIRONMENTAL
GROUP, INC.

Environmental Consultants

July 19, 2004

Mr. Scott J. Thomas
Environmental Division
James City County
101 E Mount Bay Road
P.O. Box 8784
Williamsburg, VA 23187-8784

RE: Williamsburg Montessori School, BMP As-built

Dear Mr. Thomas:

As you requested, we are submitting the attached reproducible copy of the Williamsburg Montessori School BMP As-built. To our knowledge, there are no outstanding requirements for the BMP, however, if you have any further issues that need clarification or require additional measures for bond release, please let us know.

Sincerely,

J. Glenn Muckley

J. Glenn Muckley, P.E.
Staff Engineer

PC 182
SP-26-01

3000 Easter Circle • Williamsburg, Virginia 23188 • (757) 220-6869 • FAX (757) 229-4507

ER items
need addressed &
reinspected. (3)

RD ok ✓
CC ok ✓
CR ✓

MYLAR IN FLAT FILE

CONST CERT ON DRAWING

James City County, Virginia
Environmental Division

Stormwater Management/BMP
Record Drawing and Construction Certification Review
Tracking Form

County Plan No.: SP-26-01
Project Name: WILLIAMSBURG Montessori School Parking Lot Exp
Stormwater Management Facility: SAND FILTER / BASIN
Phase: ☐ I ☐ II ☑ III

- ☑ Information Received. Date/By: 1/13/03 WEG
- ☑ Administrative Check.
  - ☑ Record Drawing Date/By: 1/13/03 WEG
  - ☑ Construction Certification Date/By: 1/13/03 WEG
  - ☑ RD/CC Standard Forms (Required for all BMPs after Feb 1st 2001 Only)
  - ☑ Insp/Maint Agreement #/Date: i/m # 01001223 6j 7/13/01
  - ☑ BMP Maintenance Plan Location: Yes, Sheet C4
  - ☐ Other:
- ☐ Standard E&SC Note on Approved Plan Requiring RD/CC or County comment in plan review file.
  ☑ Yes ☐ No Location: Note 14 Sheet 16
- ☐ Assign County BMP ID Code Code: PC 182
- ☑ Preliminary Input into Division's "As-Built Tracking Log"
- ☑ Add Location to GIS Database Map. Obtain site information (GPIN, Owner, Site Area, Address, etc.)
- ☑ Preliminary Log into Access BMP Database (BMP ID #, Plan No., GPIN, Project Name)
- ☑ Active Project File Review (correspondence, H&H, etc.).
- ☑ Initial As-Built File setup (Label, copy hydraulics, BMP plan and detail information, etc.).
- ☑ Inspector Check of RD/CC (forward to inspector using transmittal for cursory review.). GEL
- ☑ Pre-Inspection Drawing Review - Approved Plan (Quick look prior to Field Inspection).
- ☑ Final Inspection (FI) Performed Date: 3/3/03 DEC
- ☑ Record Drawing (RD) Review (*) Date: 1/15/03 SJT/DEC
- ☑ Construction Certification (CC) Review Date: 1/15/03 SJT
- ☐ Actions:
  - ☐ No comments.
  - ☑ Comments. Letter Forwarded. Date: 5/27/03
    - ☑ Record Drawing (RD)
    - ☐ ~~Construction Certification~~ (CC)
    - ☑ Construction-Related (CR) — Reinspect 6/30/04 OK.
    - ☐ Site Issues (SI)
    - ☐ Other :
- ☐ Second Submission: Sept 11 '03 RD (WEG) OK Review Sept 23 '03
- ☐ Third Submission:
- ☑ Acceptable for stormwater managment facility purposes (RD/CC/CR/Other). Proceed with bond release.
- ☑ If ok for full release, notify Inspector and Inspector Supervisor using "Surety Request Form".
- ☑ Check/Clean active file of any remaining material and finish "As-Built" file.
- ☑ Add to County BMP Inventory/Inspection schedule (Phase I, II or III).
- ☑ Copy Final Inspection Report into County BMP Inspection Program file.
- ☑ Obtain Digital Photographs of BMP and log into computer.
- ☐ NO Add to JCC Hydrology & Hydraulic database (optional).
- ☑ Complete "As-built Tracking Log".
- ☑ Request Mylar 07/01/04 WEG.

BMP Certification Information Acceptable

Plan Reviewer: [signature] Date: 07/01/04

* See separate checklist.

DEVELOPMENT MANAGEMENT

101-E MOUNTS BAY ROAD, P.O. BOX 8784, WILLIAMSBURG, VIRGINIA 23187-8784
(757) 253-6671 Fax: (757) 253-6850 E-MAIL: devtman@james-city.va.us

CODE COMPLIANCE
(757) 253-6626
codecomp@james-city.va.us

ENVIRONMENTAL DIVISION
(757) 253-6670
environ@james-city.va.us

PLANNING
(757) 253-6685
planning@james-city.va.us

COUNTY ENGINEER
(757) 253-6678
INTEGRATED PEST MANAGEMENT
(757) 253-2620

May 27, 2003

Revised RD Sept 11
Reinspect 6/30/04

Mr. Dave Lorincz
Williamsburg Montessori School
4214 Longhill Road
Williamsburg, Va. 23188

Re: Williamsburg Montessori School Parking Lot Expansion
County Plan No. SP-26-01
County BMP ID Code: PC 182

Dear Mr. Lorincz:

The Environmental Divisions has received a record drawing (asbuilt) and construction certification as submitted to our office on January 13th 2003 for the stormwater management facility at the above referenced project. The record drawing provides as-built information for a sand filter and detention basin situated situated at the west end of the parking lot area.

Based on our review of the project and a concurrent field inspection as performed on March 3rd 2003, the following items must be addressed prior to release of the developer's surety instrument for the stormwater management/BMP facility at the site and to proceed with closing out the project.

Construction Certification:

1. The construction certification dated January 13th 2003 is **satisfactory**.

Record Drawing:

Sept 23 03 OK

2. Provide asbuilt elevations and information for all primary flow control structures within each of the BMP components. The primary components of this BMP include a detention basin, which is the larger basin to the north and smaller pretreatment forebay and sand filter cells, which are located to the south along Longhill Road. Provide elevations or construction information for the riser structure/pipe in the detention basin (proposed El. 62.5); the invert elevation of the 8-inch storm drain pipe which outlets into the pretreatment basin (proposed El. 62.5); the riser in the pretreatment basin; the Nyloplast basin between the pretreatment forebay and the sand filter; and the outlet invert elevation of the 6-inch drain pipe which exits from the sand filter at Longhill Road.

9/23/03 OK

3. Provide an asbuilt elevation for the overflow crest section between the detention basin and the pretreatment forebay. Per Sheet C4 of the approved plan, the proposed spot elevation at this location was El. 64.20.

✓ 4. Add the "sand filter section" detail from Sheet C4 of the approved plan to the as-built (record) drawing for the facility. This detail provides important information about the configuration of underground components of the sand filter for the BMP. Annotate the detail as necessary with constructed information.

9/23/03

✓ 5. The certification for the record drawing is **satisfactory**; however, the date on the certification will need to be revised to reflect any corrections as outlined above. Please forward one reproducible and one blue/black line set of the record drawings to our office when completed.

9/23/03

Construction - Related Items: Request for reinspect 6/14/04. Reinspect 6/30/04

OK ✓ 6/30/03

6. It appears the overflow section between the pretreatment basin and sand filter components and the detention basin was constructed too high. Confirm the asbuilt elevation at this location and regrade as necessary. (*Note: See Item # 3 above.)*

OK ✓ 6/30/03

7. Completely clear and remove all vegetation, brush, debris and sediment at the outfall end of the 6-inch drain pipe which exits the sand filter near Longhill Road. Flow out of the sand filter portion of the BMP shall not be obstructed by vegetation, brush, debris and sediment.

OK ✓ 6/30/03

8. It appears placement of a small berm on the west (detention basin) side of the northern in-line drain (inlet) would greatly enhance the interception capacity of this particular inlet and prevent short-circuiting of stormwater runoff. This inlet is situated near the sidewalk at the northwest corner of the parking lot and near the southwest corner of the existing building.

Once this work is satisfactorily completed, contact our office appropriately for reinspection. We can then proceed with final release of the surety and/or closing out the project. One reproducible and one blue/black line set of the record drawings will be required once the above items are adequately addressed.

Please contact me at 757-253-6639 or the assigned Environmental Division inspector, Beth Davis at 757-253-6702 if you have any further comments or questions.

Sincerely,

Scott J. Thomas, P.E.
Civil Engineer
Environmental Division

cc: Glenn Muckley, WEG - via fax
Cliff Hatfield, M.K. Taylor - via fax

G:\AsBuilts\SP8201.pc182

DEVELOPMENT MANAGEMENT

101-E MOUNTS BAY ROAD, P.O. BOX 8784, WILLIAMSBURG, VIRGINIA 23187-8784
(757) 253-6671 Fax: (757) 253-6850 E-MAIL: devtman@james-city.va.us

CODE COMPLIANCE
(757) 253-6626
codecomp@james-city.va.us

ENVIRONMENTAL DIVISION
(757) 253-6670
environ@james-city.va.us

PLANNING
(757) 253-6685
planning@james-city.va.us

COUNTY ENGINEER
(757) 253-6678

INTEGRATED PEST MANAGEMENT
(757) 253-2620

May 27, 2003

220-1910

Mr. Dave Lorincz
Williamsburg Montessori School
4214 Longhill Road
Williamsburg, Va. 23188

Re: Williamsburg Montessori School Parking Lot Expansion
County Plan No. SP-26-01
County BMP ID Code: PC 182

Dear Mr. Lorincz:

The Environmental Divisions has received a record drawing (asbuilt) and construction certification as submitted to our office on January 13th 2003 for the stormwater management facility at the above referenced project. The record drawing provides as-built information for a sand filter and detention basin situated situated at the west end of the parking lot area.

Based on our review of the project and a concurrent field inspection as performed on March 3rd 2003, the following items must be addressed prior to release of the developer's surety instrument for the stormwater management/BMP facility at the site and to proceed with closing out the project.

Construction Certification:

1. The construction certification dated January 13th 2003 is **satisfactory**.

Record Drawing:

2. Provide asbuilt elevations and information for all primary flow control structures within each of the BMP components. The primary components of this BMP include a detention basin, which is the larger basin to the north and smaller pretreatment forebay and sand filter cells, which are located to the south along Longhill Road. Provide elevations or construction information for the riser structure/pipe in the detention basin (proposed El. 62.5); the invert elevation of the 8-inch storm drain pipe which outlets into the pretreatment basin (proposed El. 62.5); the riser in the pretreatment basin; the Nyloplast basin between the pretreatment forebay and the sand filter; and the outlet invert elevation of the 6-inch drain pipe which exits from the sand filter at Longhill Road.

3. Provide an asbuilt elevation for the overflow crest section between the detention basin and the pretreatment forebay. Per Sheet C4 of the approved plan, the proposed spot elevation at this location was El. 64.20.

4. Add the "sand filter section" detail from Sheet C4 of the approved plan to the as-built (record) drawing for the facility. This detail provides important information about the configuration of underground components of the sand filter for the BMP. Annotate the detail as necessary with constructed information.

5. The certification for the record drawing is **satisfactory**; however, the date on the certification will need to be revised to reflect any corrections as outlined above. Please forward one reproducible and one blue/black line set of the record drawings to our office when completed.

Construction - Related Items:

6. It appears the overflow section between the pretreatment basin and sand filter components and the detention basin was constructed too high. Confirm the asbuilt elevation at this location and regrade as necessary. (*Note: See Item # 3 above.)*

7. Completely clear and remove all vegetation, brush, debris and sediment at the outfall end of the 6-inch drain pipe which exits the sand filter near Longhill Road. Flow out of the sand filter portion of the BMP shall not be obstructed by vegetation, brush, debris and sediment.

8. It appears placement of a small berm on the west (detention basin) side of the northern in-line drain (inlet) would greatly enhance the interception capacity of this particular inlet and prevent short-circuiting of stormwater runoff. This inlet is situated near the sidewalk at the northwest corner of the parking lot and near the southwest corner of the existing building.

Once this work is satisfactorily completed, contact our office appropriately for reinspection. We can then proceed with final release of the surety and/or closing out the project. One reproducible and one blue/black line set of the record drawings will be required once the above items are adequately addressed.

Please contact me at 757-253-6639 or the assigned Environmental Division inspector, Beth Davis at 757-253-6702 if you have any further comments or questions.

Sincerely,

Scott J. Thomas, P.E.
Civil Engineer
Environmental Division

cc: Glenn Muckley, WEG - via fax
Cliff Hatfield, M.K. Taylor - via fax

G:\AsBuilts\SP8201.pc182

WILLIAMSBURG
ENVIRONMENTAL
GROUP, INC.

Environmental Consultants

September 10, 2003

SEP 2003
RECEIVED
ENVIRONMENTAL DIVISION

Mr. Daryl Cook
Environmental Division
James City County
101 E Mount Bay Road
P.O. Box 8784
Williamsburg, VA 23187-8784

RE: Williamsburg Montessori School, BMP As-built 2nd Submittal

Dear Mr. Cook:

On behalf of the Montessori School, I wish to resubmit the following record drawing entitled "BMP As-built" for your review. The current As-built plan address the comments in your letter dated May 27, 2003. If you have any questions, or require additional measures for bond release, please let us know.

Sincerely,

J. Glenn Muckley

Glenn Muckley
Staff Engineer

SP-26-01
PC 182

3000 Easter Circle • Williamsburg, Virginia 23188 • (757) 220-6869 • FAX (757) 229-4507

James City County, Virginia
Environmental Division

Stormwater Management / BMP Facilities
Record Drawing and Construction Certification Forms

(Note: In accordance with the requirements of the Chesapeake Bay Preservation Ordinance, Chapter 23, Section 23-10(4), BMP's shall be designed and constructed in accordance with the manual entitled James City County Guidelines for Design and Construction of Stormwater Management BMP's. Erosion and sediment control policy and approved plans generally require that at the completion of the project and prior to release of surety, an "as-built" plan prepared by a registered Professional Engineer or Certified Land Surveyor must be provided for the drainage system for the project, including any Best Management Practice (BMP) facilities. In addition, for BMP facilities involving the construction of an impounding structure or dam embankment, certification is required by a Professional Engineer who has inspected the structure during its construction. Currently there are over 20 water quality type BMP's accepted by the County.)

Section 1 - Site Information:

Project Name: Williamsburg Montessori School Expansion
Structure/BMP Name: Sand Filter
Project Location: 4214 Longhill Rd., Williamsburg, VA 23188
BMP Location: Southwest corner of property
County Plan No.: SP - 26 - 01

Project Type:
- ☐ Residential
- ☐ Commercial
- ☒ Institutional
- ☐ Public
- ☐ Other
- ☐ Business
- ☐ Office
- ☐ Industrial
- ☐ Roadway

Tax Map/Parcel No.: 1-3
BMP ID Code (if known): PC182
Zoning District:: B-8
Land Use: Residential
Site Area (sf or acres): 2.09

Brief Description of Stormwater Management/BMP Facility: The BMP consists of a pre-treatment basin which has a capacity of 75% of the water quality volume, the sand filter which treats the water quality volume, and a detention basin which attenuates peak flows for larger storm events.

Nearest Visible Landmark to SWM/BMP Facility: Parking Lot / School Expansion (Ex. house)

Nearest Vertical Ground Control (if known):
☐ JCC Geodetic Ground Control ☐ USGS ☐ Temporary ☐ Arbitrary ☐ Other
Station Number or Name:
Datum or Reference Elevation:
Control Description:
Control Location from Subject Facility:

Section 2 - Stormwater Management / BMP Facility Construction Information:

PreConstruction Meeting Held for Construction of SWM/BMP Facility: ☒ Yes ☐ No ☐ Unknown (JCC, VDOT)
Approx. Construction Start Date for SWM/BMP Facility: July 12, 2001
Facility Monitored by County Representative during Construction: ☐ Yes ☐ No ☐ Unknown
Name of Site Work Contractor Who Constructed Facility: M.K. Taylor
Name of Professional Firm Who Routinely Monitored Construction: Williamsburg Environmental Group, Inc.
Date of Completion for SWM/BMP Facility: October 30, 2001
Date of Record Drawing/Construction Certification Submittal: ~~January 13, 2003~~ September 10, 2003

(Note: Record Drawing and Construction Certifications are required within thirty (30) days of the completion of Stormwater Management and/or BMP facility construction. Record Drawings and Construction Certifications must be reviewed and approved by the James City County Environmental Division prior to final inspection, acceptance and bond or surety release.)

Section 3 - Owner / Designer / Contractor Information:

Owner/Developer: *(Note: Site Owner or Applicant responsible for development of the project.)*

Name: Williamsburg Montessori School
Mailing Address: 4214 Longhill Road
Williamsburg, VA 23188
Business Phone: Fax:
Contact Person: Dave Lorincz Title: Project Manager

Design Professional: *(Note: Professional Engineer or Certified Land Surveyor responsible for the design and preparation of plans and specifications for the Stormwater Management / BMP facility.)*

Firm Name: Williamsburg Environmental Group, Inc.
Mailing Address: 3000 Easter Circle
Williamsburg, VA 23188
Business Phone: (757) 220-6869
Fax: (757) 229-4507
Responsible Plan Preparer: Michael H. Balland, P.E.
Title: Senior Engineer
Plan Name: Williamsburg Montessori School
Firm's Project No. 1327
Plan Date: 5-14-01
Sheet No.'s Applicable to SWM/BMP Facility: C4 / / / /

BMP Contractor: *(Note: Site Work Contractor directly responsible for construction of the Stormwater Management / BMP facility.)*

Name: M.K. Taylor
Mailing Address: 776 Norwood Circle
Hampton, VA 23661
Business Phone: (757) 723-1131
Fax: (757) 723-1399
Contact Person: ~~Cliff Hatfield~~ Kenny Taylor
Site Foreman/Supervisor: ~~Cliff Hatfield~~ Kenny Taylor
Specialty Subcontractors & Purpose (for BMP Construction Only):

STORMWATER MANAGEMENT / BMP FACILITIES RECORD DRAWING CHECKLIST

(Key for Checklist is as follows: XX Acceptable N/A Not Applicable Inc Incomplete)

I. Methods and Presentation: *(Required for all Stormwater Management / BMP facilities.)*

XX 1. All constructed facilities meet approved design plans, unless otherwise shown. Record information or deviations from approved design plan shown in clearly annotated format and/or boxed beside design values.

XX 2. Elevations to the nearest 0.1' unless higher accuracy is needed to show positive drainage.

XX 3. All plan sheets labeled with "RECORD DRAWING" in large text in lower right hand corner (Approved County Plan Number and BMP ID Code can be included if known).

XX ~~N/A~~ 4. All plan sheet revision blocks modified to indicate date and record drawing status.

XX 5. All plan sheets have certification statements and certifying professional's signature and seal.

II. Minimum Standards: *(Required for all Stormwater Management / BMP facilities, as applicable.)*

XX 1. All requirements of Section I (Methods and Presentation) apply to this section.

XX 2. Plan Views: Show general location, arrangement and dimensions. Location and alignment shall generally match approved design plans.

XX 3. Profile or elevations along top or berm of the facility. At a minimum, elevations are required at each end, at intervals not to exceed 50 feet and where low spots may be present. Top of embankment or berm elevations must be no less than design elevation plus any settlement allowances.

XX 4. Top widths, berm widths and embankment side slopes.

XX 5. Show length, width and depth of facility or grading, contours or spot elevations as required to verify permanent pool and design storage volumes were met or were reasonably close to the approved design. Evaluation of as-built grading, contours, spot elevations, or cross-sections, may be necessary by the professional to ensure approved design configurations, depths and volumes were closely maintained. If grading or elevations are significantly different from the approved plan, the Environmental Division shall be contacted immediately to determine whether the variation is acceptable or whether further evidence will be required. Facilities which do not closely resemble approved plan grades, elevations or configurations may require regrading by the Contractor; check volumetric computations; and/or a check hydraulic routing to ensure approved design water surface elevations, discharges or freeboard were closely maintained.

XX 6. Cross-section of the embankment through the principal spillway or outlet barrel. Must extend at least 100 ft. downstream of the pipe outlet or to recorded site property line, whichever is closer. Proper correlation is required between principal spillway (control structure) crest, emergency spillway crest, orifice and weirs and the top of the dam or facility. All elevations and dimensions must reasonably match the design plan or be sequentially relative to each other and the facility must reflect the required design storage volume(s) and/or design depth.

XX 7. Profile or elevations along the entire centerline of the emergency spillway. Emergency spillway may be steeper, but no flatter or narrower than design.

XX ~~N/A~~ 8. Elevation of the principal spillway crest or outlet crest of the structure.

XX 9. Primary control structure (riser) diameter or dimensions, height, type of material and base size. Indicate provisions for access that are present such as steps, ladders, etc.

XX 10. Dimensions, locations and elevations of outlet orifices, weirs, slots and drains.

N/A 11. Type and size of anti-vortex and trash rack device. Height, diameter, dimensions, bar spacings (if applicable) and elevations relative to the principal spillway crest. Indicate if lockable hatch is present or not.

N/A 12. Type, location, size and number of anti-seep collars or documentation of other methods utilized for seepage control. May need to obtain this information during construction.

N/A 13. Top of impervious core embankment, core trench limits and elevation of cut-off trench bottom. May need to obtain this information during construction.

XX 14. Elevation of the principal spillway barrel (outlet pipe) inlet and outlet invert.

XX 15. Outlet barrel diameter, length, slope, type and thickness class of material and type of flared end sections, headwall or endwall.

XX 16. Outfall protection dimension, type and depth of rock and if underlain filter fabric is present.

XX 17. BMP interior and periphery landscaping zones conform with arrangements and requirements of the approved design plan.

XX 18. Maintenance plan taken from approved design plan transposed onto record drawing set.

N/A 19. Fencing location and type, if applicable to facility.

XX 20. BMP vicinity properly cleaned of stockpiles and construction debris.

XX 21. No visual signs of erosion or channel degradation immediately downstream of facility.

N/A 22. Any other information formally requested by the Environmental Division specific to the constructed SWM/BMP facility.

STORMWATER MANAGEMENT / BMP FACILITIES
RECORD DRAWING CHECKLIST

(Key for Checklist is as follows: XX Acceptable N/A Not Applicable Inc Incomplete)

VI. Group D - Filtering Systems

(Includes D-1 Bioretention Cells; D-2 Surface Sand Filters; D-3 Underground Sand Filters; D-4 Perimeter Sand Filters; D-5 Organic Filters; and D-6 Pocket Sand Filters)

XX D1. All requirements of Section II, Minimum Standards, apply to Group D facilities.

XX D2. Sediment pretreatment devices provided.

N/A D3. For D-1 BMPs (Bioretention Cells), pretreatment consisting of a grass filter strip below level spreader (deflector); a gravel diaphragm; and mulch and planting soil layers were provided.

N/A D4. For D-1 BMPs (Bioretention Cells), plantings consist of native plant species; vegetation provided was based on zones of hydric tolerances; trees and understory of shrubs and herbaceous materials were provided; woody vegetation is absent from inflow locations; and trees are located around facility perimeter.

XX D5. Facility was not used for erosion and sediment control purposes and sediment was prevented from entering the facility to the greatest extent possible during construction.

XX D6. No visible signs of accumulated silt/sediment were present in the facility following construction or alternately, accumulated silt/sediment was properly removed .

XX D7. Filtering system is off-line from storm drainage conveyance system.

XX D8. Overflow outlet has adequate erosion protection.

XX D9. Deflector, diversion, flow splitter or regulator structure provided to divert the water quality volume to the filtering structure.

XX D10. Minimum four (4) inch perforated underdrain provided in a clean aggregate envelope layer beneath the facility.

N/A D11. Minimum fifty (50) foot separation from any slope fifteen (15) percent or greater. Minimum one hundred (100) foot separation horizontally from any known water supply well. Minimum one hundred (100) foot separation upslope and twenty-five (25) foot separation downslope from any building.

XX D12. Stabilization and acceptable vegetative cover established over contributing drainage area prior to conveyance of stormwater to the facility.

XX D13. No visual signs of erosion or channel degradation immediately downstream of facility.

XX D14. Adequate, direct access provided to the pretreatment area and/or filter bed for future maintenance.

STORMWATER MANAGEMENT / BMP FACILITIES
RECORD DRAWING CHECKLIST

(Key for Checklist is as follows: XX Acceptable N/A Not Applicable Inc Incomplete)

X. Storm Drainage Systems (Associated with BMP's Only)

(Includes all incidental stormwater drainage conveyance systems associated with SWM/BMP facilities such as onsite or offsite storm drains, open channels, inlets, manholes, junctions, outlet protections, deflectors, etc. These facilities are external to the treatment function of, but are directly associated with drainage to and/or from a constructed SWM/BMP facility. The intent of this portion of the certification is to accurately identify the type and quantity of inflow or outflow points associated with the facility for future reference. The Professional may use his/her own discretion to determine inclusive facilities to meet the intent of this section. As a general rule, storm drainage systems would include incidental facilities to the nearest access structure upslope or downslope from the normal physical limits of the facility or 800 feet of storm drainage conveyance system length, whichever is less.)

XX SD1. All requirements of Section II, Minimum Standards, apply to Storm Drainage Systems.

XX SD2. Horizontal location of all pipe and structures relative to the SWM/BMP facility.

XX SD3. Type, top elevation and invert elevation of all access type structures (inlets, manholes, etc.).

XX SD4. Material type, size or diameter, class, invert elevations, lengths and slopes for all pipe segments.

XX SD5. Class, length, width and depth of riprap and outlet protections or dimensions of special energy dissipation structures.

XII. Other Systems

(Includes any non-typical, specialty, manufactured or innovative stormwater management/BMP practices or systems generally accepted for use as or in conjunction with other acceptable stormwater management / BMP practices. Requires evidence of prior satisfactory industry use and prior Environmental Division approval, waiver or exception .)

N/A O1. All requirements of Section II, Minimum Standards, apply to this section.

N/A O2. Certification criteria to be determined on a case-by-case basis by the Environmental Division specific to the proposed SWM/BMP facility.

James City County Environmental Division
Stormwater Management / BMP Inspection Report
Infiltration Basin and Trench Facilities

SP-26-01

County BMP ID Code (if known): PC 182

Name of Facility: Williamsburg Montessori School - Parking Lot Expansion BMP No.: PC182 Date: 3/3/03

Location: 4214 Longhill Road

Name of Owner: Williamsburg Montessori School

Name of Inspector: Darryl Cook

Type of Facility: Sand Filter / dry detention

Weather Conditions: _____ Type: ☐ Final Inspection ☐ County BMP Inspection Program ☐ Owners Inspection

If an inspection item is not applicable, mark NA, otherwise mark the appropriate column.

O.K. - The item checked is in adequate condition and the maintenance program is currently satisfactory. No action required.
Routine - The item checked requires attention, but does not present an immediate threat to the function/integrity of the BMP.
Urgent - The item checked requires immediate attention to keep the BMP operational and prevent damage to the facility.

Provide an explanation and details in the comment column, if routine or urgent are marked.

Facility Item	O.K.	Routine	Urgent	Comments
Accessibility:				
Roads	✓			
Parking Areas	✓			
Gates	NA			
Locks	NA			
Safety Fencing	NA			
Observation Wells/Areas:				
Trap Doors				Observation wells present and accessible
Manhole Covers				
Grates	NA			
Steps	NA			
Pretreatment Devices: ☐ Inlet ☐ Sump ☐ Forebay ☐ Other				
Sediment	OK			
Trash & Debris	OK			
Structure	OK			
Other				

Berm between pretreatment / sand filter + overflow detention area too high
Remove debris from outlet pipe at road
Place small berm around inlet adj. to sidewalk to ~~let~~ trap more water

Facility Item	O.K.	Routine	Urgent	Comments
Primary Storage/ Infiltration Area:				
Trash & Debris				
Sediment				
Ponding / Drawdown				
Surface Aggregates				
Aesthetics				
Other				Could not find outlet end of pipe out of sand filter
Inlet Structure # 1 (Describe Location):				
Condition of Structure				
Erosion				
Trash and Debris				
Sediment				
Aesthetics				
Other				
Inlet Structure # 2 (Describe Location):				
Condition of Structure				
Erosion				
Trash and Debris				
Sediment				
Aesthetics				
Other				
Inlet Structure # 3 (Describe Location):				
Condition of Structure				
Erosion				
Trash and Debris				
Sediment				
Aesthetics				
Other				
Outlets - Overflow or Bypass Control Structures (Describe Location):				
Condition of Structure				
Erosion				
Trash and Debris				
Sediment				
Other				

Facility Item	O.K.	Routine	Urgent	Comments
Nuisance Type Conditions:				
Mosquito Breeding				
Animals, Rodents				
Graffiti				
Other				
Perimeter (Contributing Drainage Area) Conditions:				
Stabilization				
Vegetation Condition				
Trash and Debris				
Aesthetics				
Other				

Remarks:

Overall Environmental Division Internal Rating: 3

Signature: [signature] P.E.

Date: 5/27/03

Title: Civil Engineer ENV DIV

(Completed BMP forms.)

SWMProg\BMP\CoInspProg\SubDetInfil.wpd

James City County Environmental Division
Stormwater Management / BMP Inspection Report
Detention and Retention Pond Facilities

County BMP ID Code (if known): PC182

Name of Facility: _____ BMP No.: ____ of ____ Date: _____

Location: _____

Name of Owner: _____

Name of Inspector: _____

Type of Facility: _____

Weather Conditions: _____ Type: ❒ Final Inspection ❒ County BMP Inspection Program ❒ Owner Inspection

If an inspection item is not applicable, mark NA, otherwise mark the appropriate column.

O.K. - The item checked is in adequate condition and the maintenance program is currently satisfactory. No action required.
Routine - The item checked requires attention, but does not present an immediate threat to the function/integrity of the BMP.
Urgent - The item checked requires immediate attention to keep the BMP operational and to prevent damage to the facility.

Provide an explanation and details in the comment column, if routine or urgent are marked.

Facility Item	O.K.	Routine	Urgent	Comments
Embankments and Side Slopes:				
Grass Height				
Vegetation Condition				
Tree Growth				
Erosion				
Trash & Debris				
Seepage				
Fencing or Benches				
Interior Landscaping/Planted Areas: ❒ None ❒ Constructed Wetland/Shallow Marsh ❒ Naturally Established Vegetation				
Vegetated Conditions				
Trash & Debris				
Floating Material				
Erosion				
Sediment				
Dead Plant				
Aesthetics				
Other				
Notes:				

Facility Item	O.K.	Routine	Urgent	Comments
Water Pools: ❒ Permanent Pool (Retention Basin) ❒ Shallow Marsh (Detention Basin) ❒ None, Dry (Detention Basin)				
Shoreline Erosion				
Algae				
Trash & Debris				
Sediment				
Aesthetics				
Other				
Inflows (Describe Types/Locations):				
Condition of Structure				
Erosion				
Trash and Debris				
Sediment				
Outlet Protection				
Other				
Principal Flow Control Structure - Riser, Intake, etc. (Describe Type):				
Condition of Structure				
Corrosion				
Trash and Debris				
Sediment				
Vegetation				
Other				
Principal Outlet Structure - Barrel, Conduit, etc. :				
Condition of Structure				
Settlement				
Trash & Debris				
Erosion/Sediment				
Outlet Protection				
Other				
Emergency Spillway (Overflow):				
Vegetation				
Lining				
Erosion				
Trash & Debris				
Other				
Notes:				

Facility Item	O.K.	Routine	Urgent	Comments
Nuisance Type Conditions:				
Mosquito Breeding				
Animal Burrows				
Graffiti				
Other				
Surrounding Perimeter Conditions:				
Land Uses				
Vegetation				
Trash & Debris				
Aesthetics				
Access /Maintenance Roads or Paths				
Other				

Remarks:

Overall Environmental Division Internal Rating: ___ _____

Signature: _____ **Date:** _____

Title: _____

SWMProg\BMP\CoInspProg\DetRet.wpd

RECORD DRAWING CERTIFICATION

I HEREBY CERTIFY TO THE BEST OF MY KNOWLEDGE AND BELIEF THAT THIS RECORD DRAWING REPRESENTS THE ACTUAL CONDITION OF THE STORMWATER MANAGEMENT/BMP FACILITY. THE FACILITY APPEARS TO CONFORM WITH THE PROVISIONS OF THE APPROVED DESIGN PLAN, EXCEPT AS SPECIFICALLY NOTED.

COMMONWEALTH OF VIRGINIA
MICHAEL H. BALLARD
No. 035107
1/13/03
PROFESSIONAL ENGINEER

CONSTRUCTION CERTIFICATION

I HEREBY CERTIFY TO THE BEST OF MY KNOWLEDGE AND BELIEF THAT THIS STORMWATER MANAGEMENT/BMP FACILITY WAS MONITORED AND CONSTRUCTED IN ACCORDANCE WITH THE PROVISIONS OF THE APPROVED DESIGN PLAN, SPECIFICATIONS AND STORMWATER MANAGEMENT PLAN, EXCEPT AS SPECIFICALLY NOTED.

COMMONWEALTH OF VIRGINIA
MICHAEL H. BALLARD
No. 035107
1/13/03
PROFESSIONAL ENGINEER

SAND FILTER MAINTENANCE PLAN

1. SEDIMENT SHALL BE CLEANED OUT OF THE SEDIMENTATION CHAMBER WHEN IT ACCUMULATES TO A DEPTH OF MORE THAN 12 INCHES.

2. VEGETATION WITHIN THE SEDIMENTATION CHAMBER SHALL BE LIMITED TO A HEIGHT OF 18 INCHES.

3. THE SAND FILTER OUTLET DEVICES SHALL BE CLEANED/REPAIRED WHEN DRAWDOWN TIMES EXCEED 36 HOURS.

4. TRASH AND DEBRIS SHALL BE REMOVED AS NECESSARY. THE PLASTIC BASIN WILL CAPTURE SEDIMENT AND DEBRIS AND MUST BE CLEANED ON A REGULAR BASIS.

5. SILT/SEDIMENT SHALL BE REMOVED FROM THE FILTER BED WHEN THE ACCUMULATION EXCEEDS ONE INCH. WHEN THE FILTERING CAPACITY OF THE FILTER DIMINISHES SUBSTANTIALLY (I.E., WHEN WATER PONDS ON THE SURFACE OF THE FILTER BED FOR MORE THAN 48 HOURS), THE TOP FEW INCHES OF DISCOLORED MATERIAL SHALL BE REMOVED AND REPLACED WITH FRESH MATERIAL. THE REMOVED SEDIMENTS SHOULD BE DISPOSED OF IN AN ACCEPTABLE MANNER (I.E., LANDFILL).

6. GRASS COVER OF SURFACE SAND FILTER SHOULD BE MOWED A MINIMUM OF 3 TIMES PER GROWING SEASON TO MAINTAIN MAXIMUM GRASS HEIGHTS LESS THAN 12 INCHES.

7. DIRECT MAINTENANCE ACCESS SHALL BE PROVIDED TO THE FILTER.

8. BMP SHOULD BE INSPECTED ON AN ANNUAL BASIS TO ENSURE PROPER PERFORMANCE.

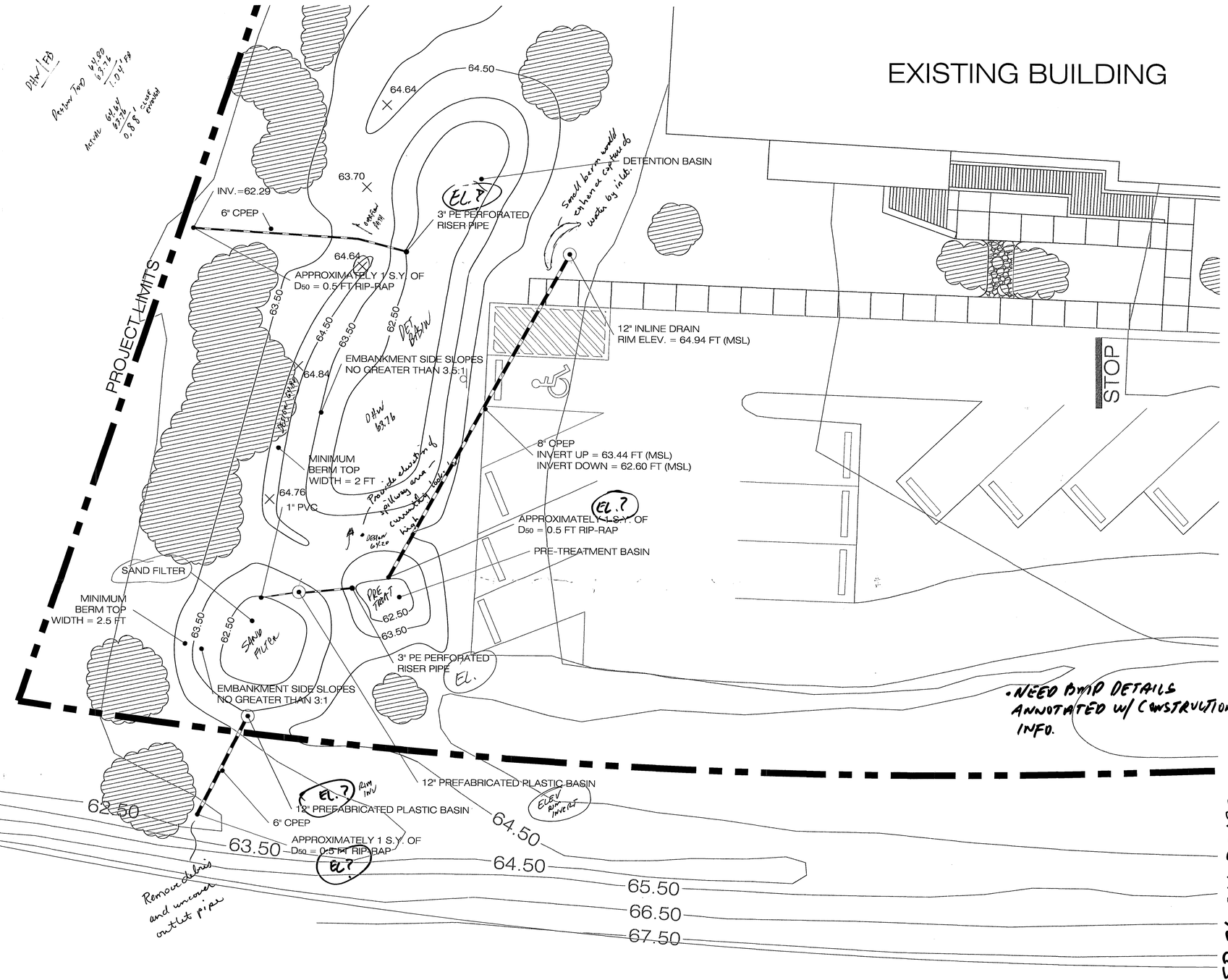

• NEED BMP DETAILS ANNOTATED W/ CONSTRUCTION INFO.

REVIEW SET SP-26-01; PC182

RECORD DRAWING
JAMES CITY COUNTY
BMP ID CODE:
PC 182
JAMES CITY COUNTY
PLAN NUMBER:
SP-26-01

9300 Eastern Circle
Virginia Beach, Virginia 23188
(757) 220-6869
7401 Beaulfont Springs Drive, Suite 205
Richmond, Virginia 23225
(804) 267-3474
46030 Manekin Plaza, Suite 160
Sterling, Virginia 20166
(703) 406-1380
WILLIAMSBURG ENVIRONMENTAL GROUP, INC.
Environmental Consultants

BMP AS-BUILT
WILLIAMSBURG MONTESSORI SCHOOL
JAMES CITY COUNTY, VIRGINIA

COMMONWEALTH OF VIRGINIA
MICHAEL H. BALLARD
No. 035107
1/13/03
PROFESSIONAL ENGINEER

REVISIONS:
DATE:

DRAWN BY: JGM	DESIGNED BY: JGM
DATE: 01/09/03	CHECKED BY: MHB

SHEET: A1
JOB#: 1327

I:\1300s\1327-Montessori School Expansion\Stormwater\BMP As-Built\As-built.dwg

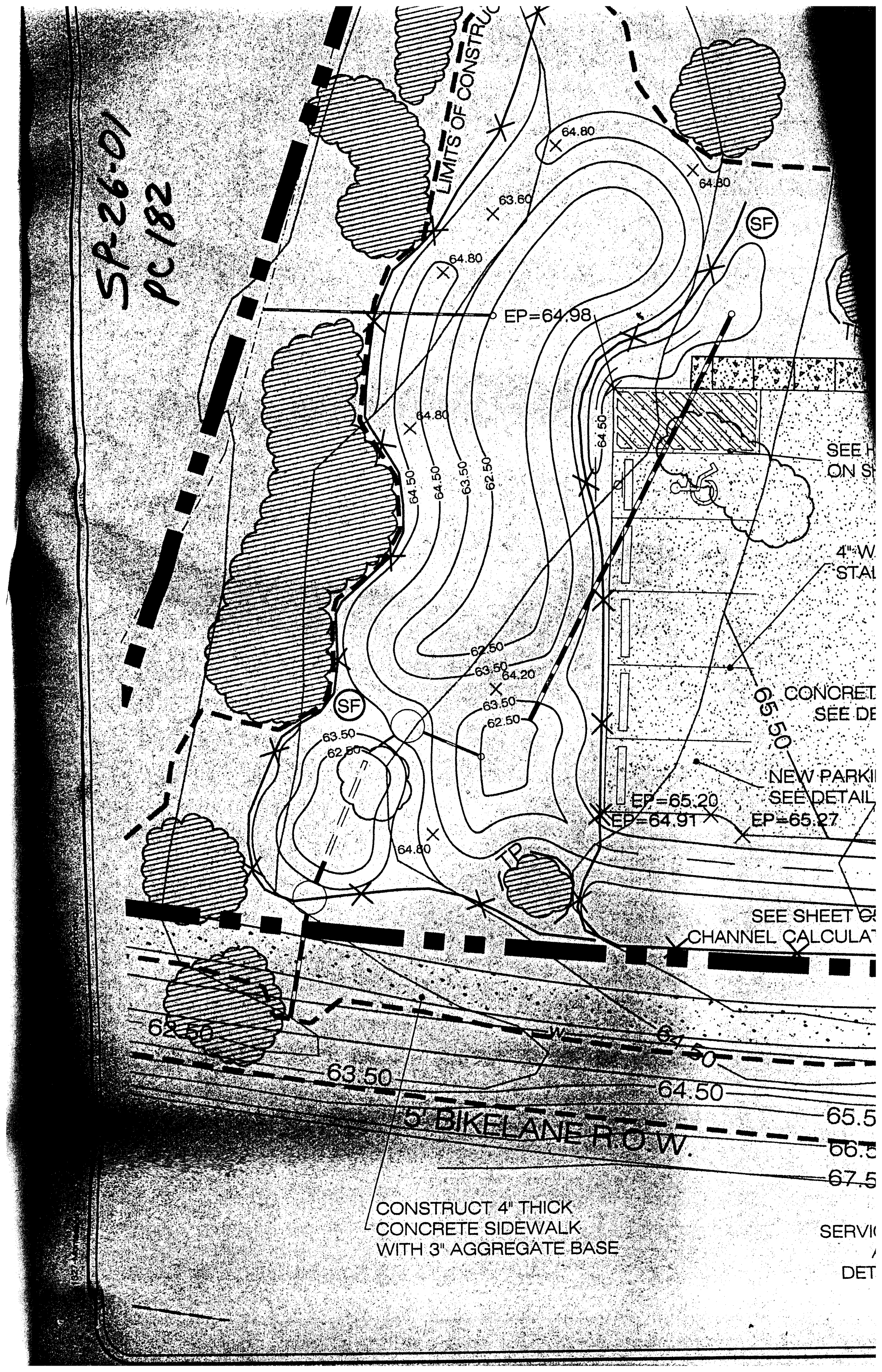
SP26-01
PC182
LIMITS OF CONSTRUC
64.80
64.80
63.60
64.80
EP=64.98
64.80
64.50
64.50
63.50
62.50
SF
64.50
SEE H
ON S
4" W
STA
62.50
63.50
64.20
63.50
62.50
SF
63.50
62.50
65.50
CONCRET
SEE DE
NEW PARKI
SEE DETAIL
EP=65.20
EP=64.91
EP=65.27
64.80
TP
SEE SHEET C
CHANNEL CALCULA
62.50
64.50
63.50
64.50
65.5
5' BIKELANE R.O.W.
66.5
67.5
CONSTRUCT 4" THICK
CONCRETE SIDEWALK
WITH 3" AGGREGATE BASE
SERVI
DET

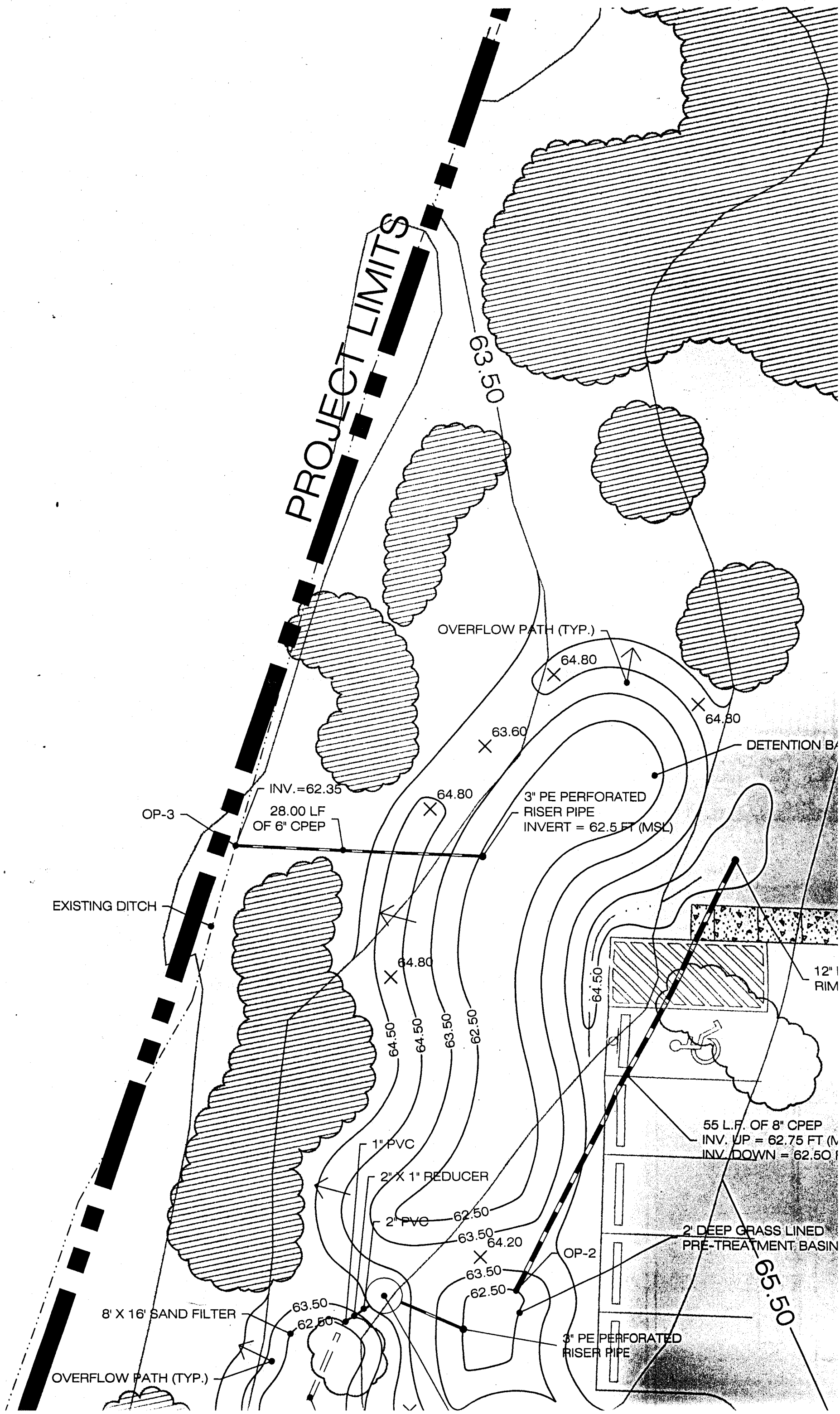
PROJECT LIMITS
63.50
OVERFLOW PATH (TYP.)
64.80
64.80
63.60
DETENTION BA
INV.=62.35
64.80
3" PE PERFORATED
RISER PIPE
INVERT = 62.5 FT (MSL)
OP-3
28.00 LF
OF 6" CPEP
EXISTING DITCH
64.80
64.50
64.50
63.50
62.50
64.50
12"
RIM
55 L.F. OF 8" CPEP
INV. UP = 62.75 FT (M
INV. DOWN = 62.50
1" PVC
2" X 1" REDUCER
2" PVC
62.50
63.50
64.20
2' DEEP GRASS LINED
PRE-TREATMENT BASIN
OP-2
63.50
62.50
65.50
8' X 16' SAND FILTER
63.50
62.50
3" PE PERFORATED
RISER PIPE
OVERFLOW PATH (TYP.)

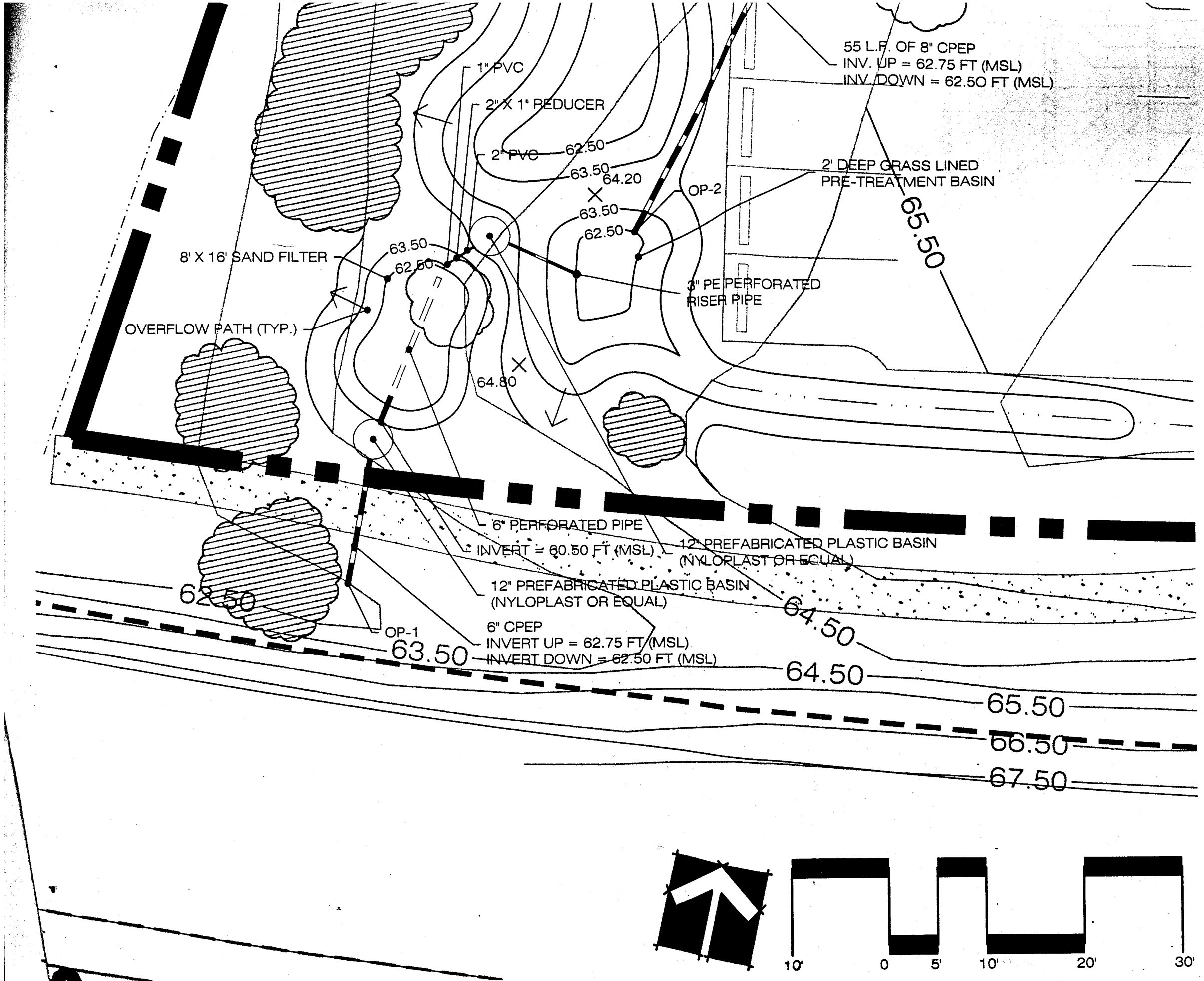

HYDROLO

OUTFLOW (ROUTED)

Area	C	CxA	SUM	Tc
(acres)			CxA	(min)
0.11	0.90	0.10	0.10	5

OUTLET P

	Pipe			
	Diameter	Pipe Discharge	Flow Depth	Tail Water
	(in)	(cfs)	(ft)	(ft)
OP-1	6	0.01	0.023	0.262
OP-2	8	0.69	0.322	0.494
OP-3	6	0.18	0.159	0.330

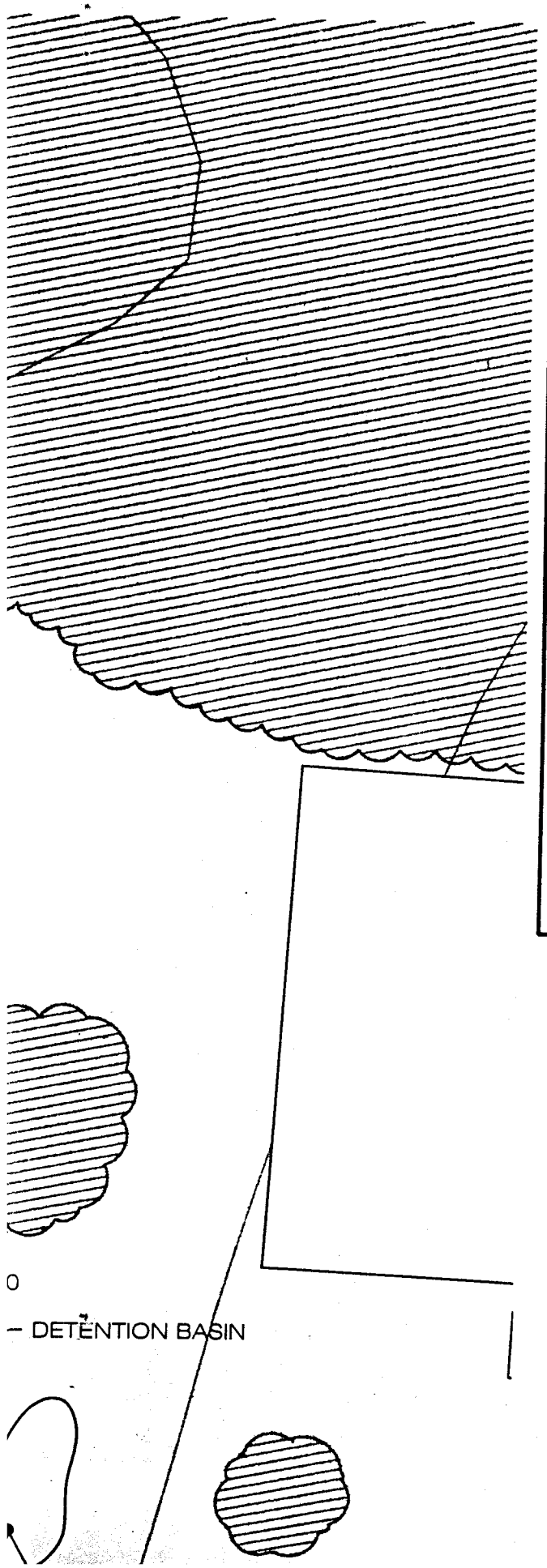

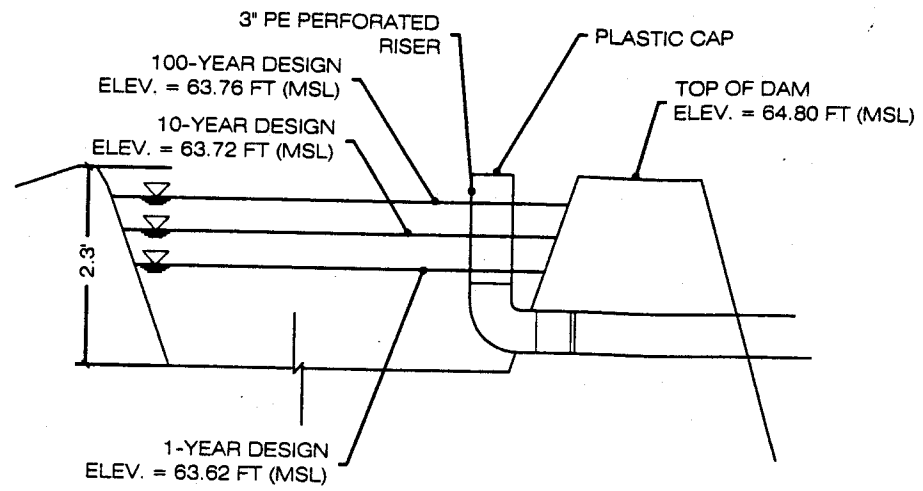

DETAIL: DETENTION BASIN SECTION

NTS

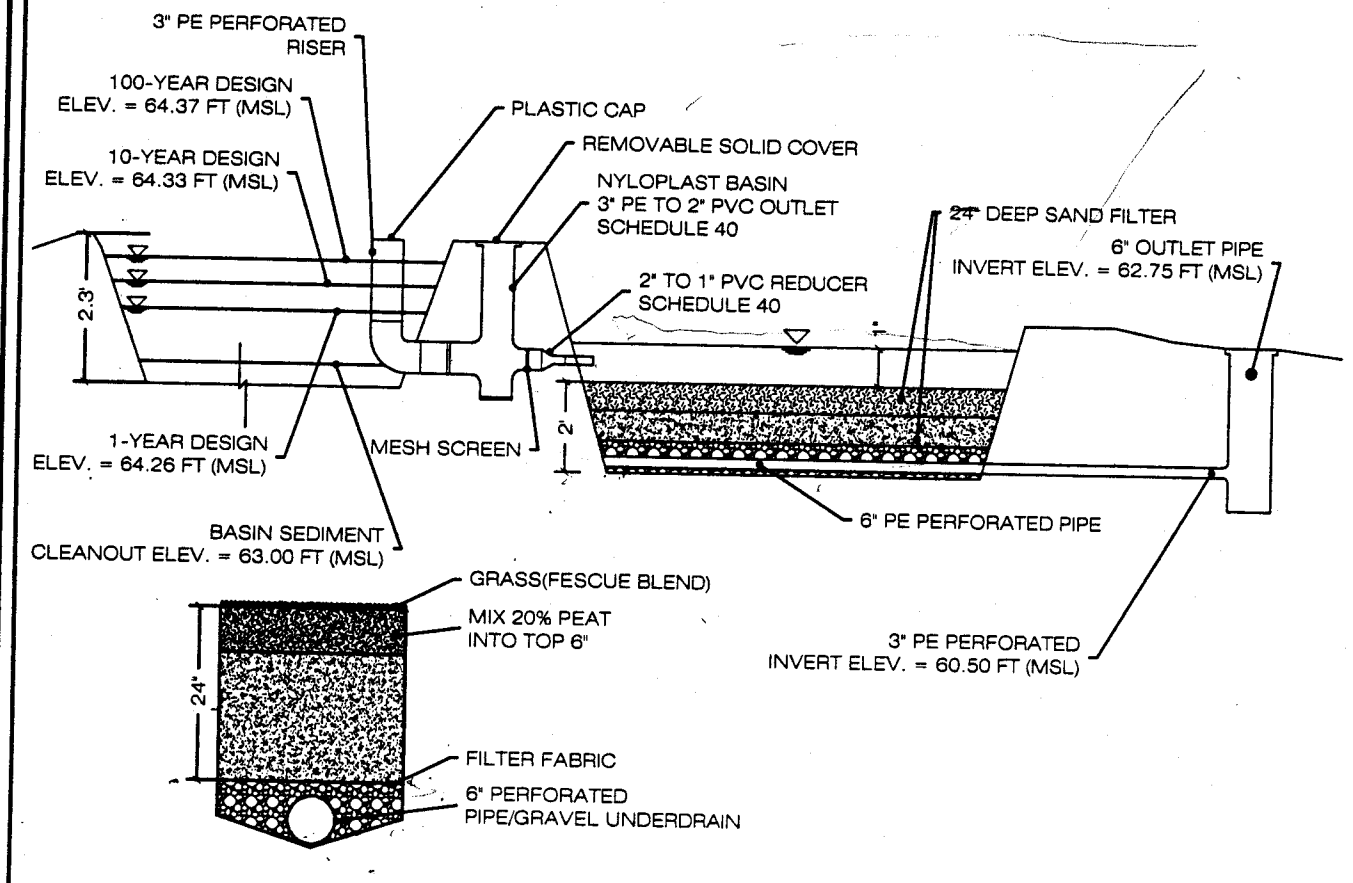

DETAIL: SAND FILTER SECTION

NTS

TR-55 METHOD DETENTION BASIN HYDROLOGY

PRE-DEVELOPMENT

DA (ACRES)	Tc (MIN)	CN	1-YR FLOW (CFS)	10-YR FLOW (CFS)	100-YR FLOW (CFS)
0.38	5	77	0.54	1.97	3.11

POST-DEVELOPMENT

DA (ACRES)	Tc (MIN)	CN	1-YR FLOW	10-YR FLOW	100-YR FLOW

SEQUENCE OF CONSTF

ROUGH EXCAVATION OF THE BMP AND DETENTION
GRADING OF THE PARKING AREA TO PERMIT USE C
SITE. HOWEVER, THE SAND FILTER MUST NOT BE (
ENTIRE CONTRIBUTING DRAINAGE AREA HAS BEEN
RECENTLY CONSTRUCTED AREAS WITHIN THE DRA
FORMED BASIN WITH A LARGE LOAD OF FINE SEDI
INFILTRATION ABILITY OF THE BASIN FLOOR. FOR
FOR SEDIMENT BASINS FOR EROSION AND SEDIME
SEQUENCE OF CONSTRUCTION SHALL BE AS FOLL

1. INSTALL EROSION AND SEDIMENT CONTROL M

2. GRADE THE PARKING LOT TO ELEVATIONS SH
SAND FILTER PROVIDING EROSION AND SEDIMEN
AND THE DETENTION BASIN AS SHOWN ON THE

3. COMPLETE CONSTRUCTION ON THE IMPRO
SAND FILTER.

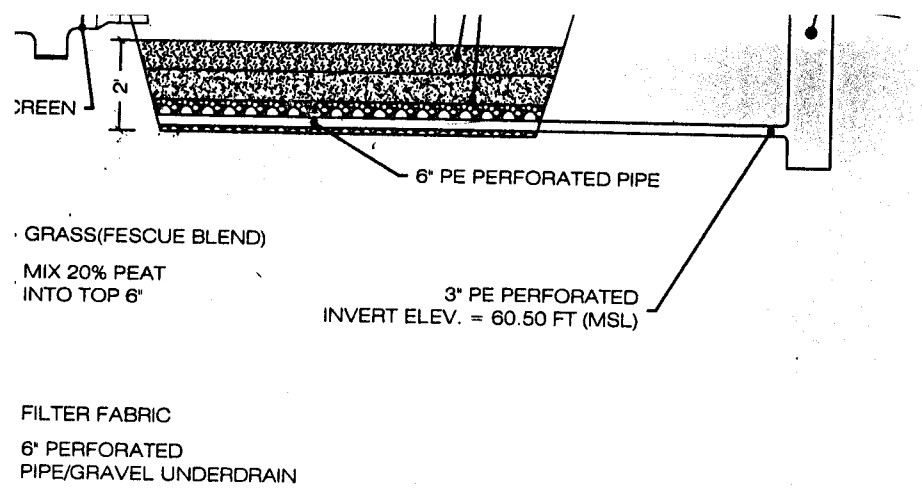

ND FILTER SECTION

NTS

Use following formula based on Darcy's Law

$$Af = (WQv)(df)/[(k)(hf + df)(tf)]$$

Where:

Af	=	Surface area of filter bed (S.F.)
WQv	=	Water quality volume (C.F.)
Df	=	Filter bed depth (ft)
k	=	Coefficient of permeability for filter media (ft/day)
hf	=	Average height of water above filter bed (ft)
tf	=	Design filter bed drain time (days)

Use:

df	=	1.5 ft
k	=	3.5 ft/day
hf	=	0.5 ft
tf	=	1.67 days

$$Af = (990.8\ C.F.)(1.5ft)/[3.5\ ft\ (0.5\ ft + 1.5\ ft)(1.67\ days)]$$

$$Af = 128\ S.F.$$

Use a 2 to 1 length to width ratio.

8' X 16' filter size

SEQUENCE OF CONSTRUCTION

ROUGH EXCAVATION OF THE BMP AND DETENTION BASIN MAY BE SCHEDULED WITH THE ROUGH GRADING OF THE PARKING AREA TO PERMIT USE OF THE EXCAVATED MATERIAL AS FILL ELSEWHERE ON SITE. HOWEVER, THE SAND FILTER MUST NOT BE CONSTRUCTED OR PLACED IN SERVICE UNTIL THE ENTIRE CONTRIBUTING DRAINAGE AREA HAS BEEN STABILIZED. RUNOFF FROM THE UNTREATED, RECENTLY CONSTRUCTED AREAS WITHIN THE DRAINAGE AREA MAY OTHERWISE LOAD THE NEWLY FORMED BASIN WITH A LARGE LOAD OF FINE SEDIMENT, SERIOUSLY IMPAIRING THE NATURAL INFILTRATION ABILITY OF THE BASIN FLOOR. FOR THESE REASONS, THE SAND FILTER MUST NOT BE USED FOR SEDIMENT BASINS FOR EROSION AND SEDIMENT PROTECTION DURING SITE CONSTRUCTION. THE SEQUENCE OF CONSTRUCTION SHALL BE AS FOLLOWS:

1. INSTALL EROSION AND SEDIMENT CONTROL MEASURES FOR THE PARKING LOT.

2. GRADE THE PARKING LOT TO ELEVATIONS SHOWN ON THE PLAN. CONSTRUCTION MAY BEGIN ON SAND FILTER PROVIDING EROSION AND SEDIMENT CONTROL MEASURES ARE INSTALLED AROUND THEM AND THE DETENTION BASIN AS SHOWN ON THE CONSTRUCTION PLAN.

3. COMPLETE CONSTRUCTION ON THE IMPROVEMENTS AND STABILIZE ALL AREAS DRAINING TO THE SAND FILTER.

4. REMOVE ALL ACCUMULATED SEDIMENT AND EXCAVATE SAND FILTER BASIN TO PROPOSED DEPTH.

5. INSTALL THE PERFORATED PIPING, DRAIN, AND SPECIFIED MIX IN THE SAND FILTER.

6. THE SITE MUST BE STABILIZED PRIOR TO REMOVAL OF EROSION AND SEDIMENT CONTROL MEASURES UPON AUTHORIZATION FROM DESIGNATED INSPECTOR. POSITIVE DRAINAGE MUST BE ESTABLISHED PRIOR TO FINAL STABILIZATION.

SAND FILTER MAINTENANCE PLAN

1. SEDIMENT SHALL BE CLEANED OUT OF THE SEDIMENTATION CHAMBER WHEN IT ACCUMULATES TO A DEPTH OF MORE THAN 12 INCHES.

2. VEGETATION WITHIN THE SEDIMENTATION CHAMBER SHALL BE LIMITED TO A HEIGHT OF 18 INCHES.

3. THE SAND FILTER OUTLET DEVICES SHALL BE CLEANED/REPAIRED WHEN DRAWDOWN TIMES EXCEED 36 HOURS.

4. TRASH AND DEBRIS SHALL BE REMOVED AS NECESSARY. THE PLASTIC BASIN WILL CAPTURE SEDIMENT AND DEBRIS AND MUST BE CLEANED ON A REGULAR BASIS.

5. SILT/SEDIMENT SHALL BE REMOVED FROM THE FILTER BED WHEN THE ACCUMULATION EXCEEDS ONE INCH. WHEN THE FILTERING CAPACITY OF THE FILTER DIMINISHES SUBSTANTIALLY (I.E., WHEN WATER PONDS ON THE SURFACE OF THE FILTER BED FOR MORE THAN 48 HOURS), THE TOP FEW INCHES OF DISCOLORED MATERIAL SHALL BE REMOVED AND REPLACED WITH FRESH MATERIAL. THE REMOVED SEDIMENTS SHOULD BE DISPOSED OF IN AN ACCEPTABLE MANNER (I.E., LANDFILL).

6. GRASS COVER OF SURFACE SAND FILTER SHOULD BE MOWED A MINIMUM OF 3 TIMES PER GROWING SEASON TO MAINTAIN MAXIMUM GRASS HEIGHTS LESS THAN 12 INCHES.

7. DIRECT MAINTENANCE ACCESS SHALL BE PROVIDED TO THE FILTER.

8. BMP SHOULD BE INSPECTED ON AN ANNUAL BASIS TO ENSURE PRO PER PERFORMANCE.

STAGE-STORAGE DATA

PRE-TREATMENT BASIN

ELEVATION (FT (MSL))	VOLUME (C.F.)
62.50	0
63.50	130
64.20	261
64.50	348

DETENTION BASIN

NS

IOTES:

. TO CONFORM WITH VDOT ROAD AND BRIDGE SPECIFICATIONS LATEST

R PAVEMENT SHALL NOT BE LESS THAN 95% MAXIMUM DENSITY IN
TH ASTM D 1557.

NG TO BE SUCH AS TO PRECLUDE PONDING OF WATER.

ABLE MATERIAL IS ENCOUNTERED IN THE ROADWAY OR PARKING LOT, IT
ED AND REPLACED WHERE NECESSARY WITH SUITABLE MATERIAL.

SE MATERIAL MUST BE FROM AN APPROVED SOURCE. A LETTER FROM THE
THE MATERIALS USED TO MEET THE REQUIREMENTS OF VDOT WILL BE

EA INCLUDED WITHIN THE PROPOSED LIMITS OF CUT AND FILL SHALL BE
ROOT MAT, TRASH AND OTHER ORGANIC AND OTHERWISE UNSUITABLE

SHALL BE MADE WHICH CREATES AN EXPOSED SURFACE STEEPER THAN

SHALL SUBMIT AS-BUILT DRAWINGS FOR STORMWATER MANAGEMENT/BMP
AIN COUNTY APPROVAL PRIOR TO ACCEPTANCE OF PROJECT.

UNTY REQUIRES CONSTRUCTION CERTIFICATION PRIOR TO RELEASE OF
RETY.

LANDS, TIDAL SHORES, NON-TIDAL WETLANDS IN RPA, RESOURCE
S, NON-TIDAL WETLANDS IN RMA, HYDRIC SOILS AND SLOPES 25 PERCENT
ON SITE. THEREFORE, AN ENVIRONMENTAL INVENTORY IS NOT REQUIRED
).

RAL PLANTING NOTES:

AL LIST FOR SPECIFIC PLANT SPECIES.

NTRACTOR SHALL REFER TO THE STANDARDIZED LANDSCAPE
R THE STATE OF VIRGINIA FOR ADDITIONAL INFORMATION. THE
LL ABIDE BY ITS CONTENTS; HOWEVER ANY NOTES OR SPECIFICATIONS ON
ERSEDE THOSE OUTLINED IN THE SPECIFICATIONS MANUAL. (COPIES ARE
EE FROM THE VIRGINIA CHAPTER OF THE AMERICAN SOCIETY OF
TECTS, VIRGINIA NURSERYMEN'S ASSOCIATION, INC. AND THE VIRGINIA
SCAPE DESIGNERS.)

HER THAN WILLIAMSBURG ENVIRONMENTAL GROUP (WEG) (OWNER
/ERTISES, SOLICITS AND/OR RECEIVES BIDS FOR WORK, THE LANDSCAPE
LL STILL PROVIDE COPIES OF UNIT PRICE BID TO WEG.

ENGINEERING PLANS FOR ANY DETAILED SITE INFORMATION.

LL BE COORDINATED WITH OTHER TRADES.

G SHALL BE DONE BY GENERAL SITE CONTRACTOR. ANY FINE GRADING

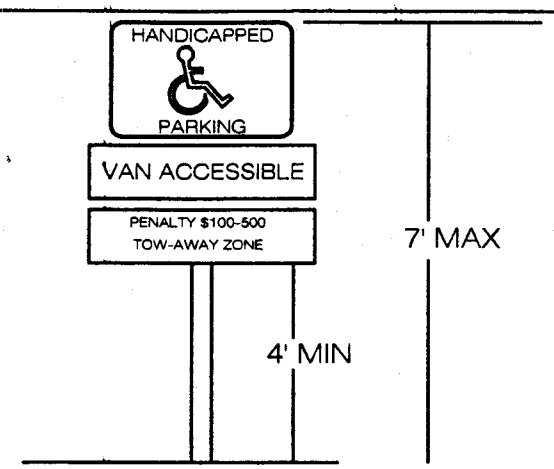

NOTE

Provide (1) 12"x18" sign at handicapped parking space indicated on the site plan. Sign will be Aluminum (painted blue) w/white letters & international wheelchair symbol on 4' high, 1.5" dia. steel post, painted black or 4"x4" pressure treated lumber set into 12" of concrete.

DETAIL: VAN ACCESSIBLE
HANDICAP PARKING SIGN NTS

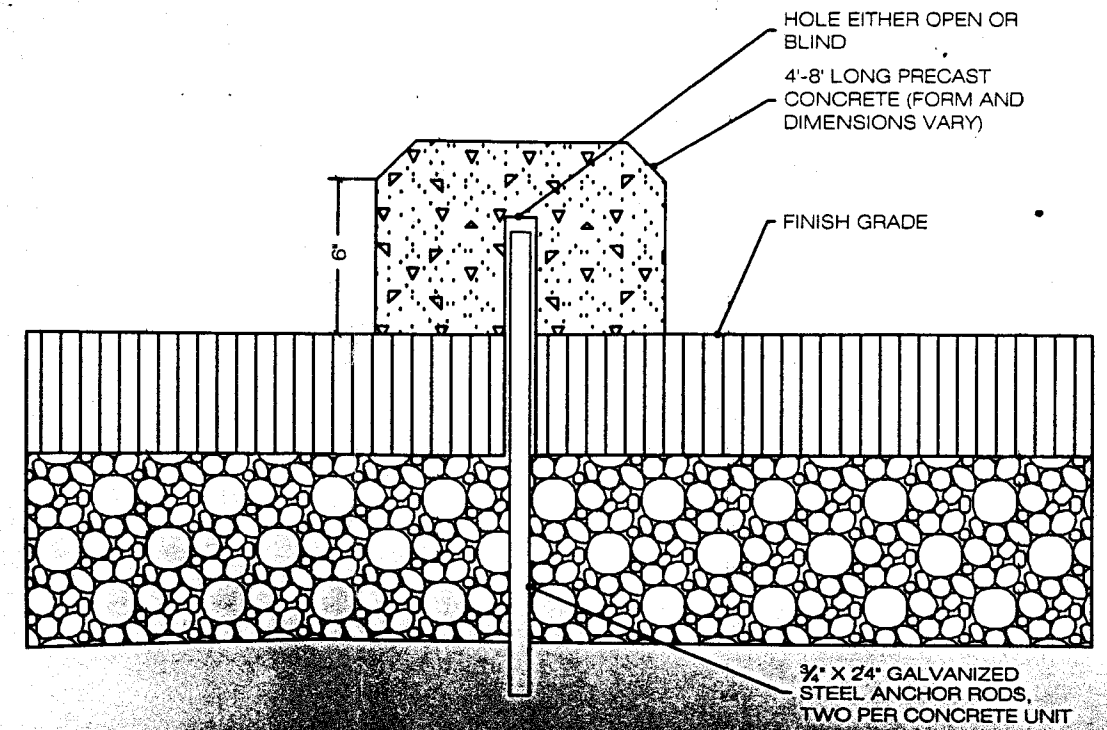

NOTE

Provide (1) 12"x18" s
indicated on the site
(painted blue) w/whi
on 4' high, 1.5" dia.
into 12" of concrete.

DET
PAF

2.5" \

WILLIAMSBURG
ENVIRONMENTAL
GROUP, INC.

Environmental Consultants

JAN 2003
RECEIVED
ENVIRONMENTAL DIVISION

SP-26-01
PC 182

January 13, 2003

Mr. Daryl Cook
Environmental Division
James City County
101 E Mount Bay Road
P.O. Box 8784
Williamsburg, VA 23187-8784

RE: Williamsburg Montessori School, BMP As-built Submittal

Dear Mr. Cook:

On behalf of the Montessori School, I wish to submit the following record drawing entitled "BMP As-built" for your review. If you have any questions, or require additional measures for bond release, please let us know.

Sincerely,

Glenn Muckley

Glenn Muckley
Staff Engineer

3000 Easter Circle • Williamsburg, Virginia 23188 • (757) 220-6869 • FAX (757) 229-4507

PC182

JUN 2001 RECEIVED ENVIRONMENTAL DIVISION

Table of Contents

********** RAINFALL DATA **********

TypeII 24hr.... ..1
Synthetic Curve 1.01

TypeII 24hr.... ..2
Synthetic Curve 1.03

TypeII 24hr.... .10
Synthetic Curve 1.05

TypeII 24hr.... 100
Synthetic Curve 1.07

********** CN CALCULATIONS **********

DA POST..... Runoff CN-Area 2.01

DA PRE..... Runoff CN-Area 2.02

********** RUNOFF HYDROGRAPHS **********

DA PRE..... ..1
SCS Unit Hyd. Summary 3.01

DA PRE..... ..2
SCS Unit Hyd. Summary 3.02

DA PRE..... .10
SCS Unit Hyd. Summary 3.03

DA PRE..... 100
SCS Unit Hyd. Summary 3.04

DA1 POST..... ..1
SCS Unit Hyd. Summary 3.05

DA1 POST..... ..2
SCS Unit Hyd. Summary 3.06

Table of Contents (continued)

DA1 POST..... .10
SCS Unit Hyd. Summary 3.07

DA1 POST..... 100
SCS Unit Hyd. Summary 3.08

********** POND VOLUMES **********

DETENTION..... Vol: Elev-Area 4.01

PRE-TREATMENT... Vol: Elev-Area 4.02

********** OUTLET STRUCTURES **********

DETENTION OUTLET Outlet Input Data 5.01
Individual Outlet Curves 5.04
Composite Rating Curve 5.07

PRE-TREAT OUTLET Outlet Input Data 5.08
Individual Outlet Curves 5.10
Composite Rating Curve 5.12

PRE-TREATMENT... Multiple Outfall Rating Curves 5.13

********** POND ROUTING **********

DETENTION IN ..1
Node: Pond Inflow Summary 6.01

DETENTION IN ..2
Node: Pond Inflow Summary 6.03

DETENTION IN .10
Node: Pond Inflow Summary 6.06

DETENTION IN 100
Node: Pond Inflow Summary 6.09

Table of Contents (continued)

DETENTION OUT ..1
Pond Routing Summary 6.12

DETENTION OUT ..2
Pond Routing Summary 6.13

PRE-TREATMENT... Pond E-V-Q Table 6.14

PRE-TREATMENTIN ..1
Node: Pond Inflow Summary 6.15

PRE-TREATMENTIN ..2
Node: Pond Inflow Summary 6.18

PRE-TREATMENTIN .10
Node: Pond Inflow Summary 6.21

PRE-TREATMENTIN 100
Node: Pond Inflow Summary 6.25

CUMULATIVE RAINFALL FRACTIONS
Output Time increment = .1000 hrs
Time on left represents time for first value in each row.

Time hrs					
.0000	.000	.001	.002	.003	.004
.5000	.005	.006	.007	.008	.009
1.0000	.011	.012	.013	.014	.015
1.5000	.016	.017	.018	.020	.021
2.0000	.022	.023	.024	.026	.027
2.5000	.028	.029	.031	.032	.033
3.0000	.035	.036	.037	.038	.040
3.5000	.041	.042	.044	.045	.047
4.0000	.048	.049	.051	.052	.054
4.5000	.055	.057	.058	.060	.061
5.0000	.063	.065	.066	.068	.070
5.5000	.071	.073	.075	.076	.078
6.0000	.080	.082	.084	.085	.087
6.5000	.089	.091	.093	.095	.097
7.0000	.099	.101	.103	.105	.107
7.5000	.109	.111	.113	.116	.118
8.0000	.120	.122	.125	.127	.130
8.5000	.132	.135	.138	.141	.144
9.0000	.147	.150	.153	.157	.160
9.5000	.163	.166	.170	.173	.177
10.0000	.181	.185	.189	.194	.199
10.5000	.204	.209	.215	.221	.228
11.0000	.235	.243	.251	.261	.271
11.5000	.283	.307	.354	.431	.568
12.0000	.663	.682	.699	.713	.725
12.5000	.735	.743	.751	.759	.766
13.0000	.772	.778	.784	.789	.794
13.5000	.799	.804	.808	.812	.816
14.0000	.820	.824	.827	.831	.834
14.5000	.838	.841	.844	.847	.850
15.0000	.854	.856	.859	.862	.865
15.5000	.868	.870	.873	.875	.878
16.0000	.880	.882	.885	.887	.889
16.5000	.891	.893	.895	.898	.900
17.0000	.902	.904	.906	.908	.910
17.5000	.912	.914	.915	.917	.919
18.0000	.921	.923	.925	.926	.928
18.5000	.930	.931	.933	.935	.936
19.0000	.938	.939	.941	.942	.944
19.5000	.945	.947	.948	.949	.951
20.0000	.952	.953	.955	.956	.957
20.5000	.958	.960	.961	.962	.964
21.0000	.965	.966	.967	.968	.970
21.5000	.971	.972	.973	.975	.976
22.0000	.977	.978	.979	.981	.982
22.5000	.983	.984	.985	.986	.988

CUMULATIVE RAINFALL FRACTIONS
Output Time increment = .1000 hrs
Time on left represents time for first value in each row.

Time hrs					
23.0000	.989	.990	.991	.992	.993
23.5000	.994	.996	.997	.998	.999
24.0000	1.000				

CUMULATIVE RAINFALL FRACTIONS
Output Time increment = .1000 hrs
Time on left represents time for first value in each row.

Time hrs					
.0000	.000	.001	.002	.003	.004
.5000	.005	.006	.007	.008	.009
1.0000	.011	.012	.013	.014	.015
1.5000	.016	.017	.018	.020	.021
2.0000	.022	.023	.024	.026	.027
2.5000	.028	.029	.031	.032	.033
3.0000	.035	.036	.037	.038	.040
3.5000	.041	.042	.044	.045	.047
4.0000	.048	.049	.051	.052	.054
4.5000	.055	.057	.058	.060	.061
5.0000	.063	.065	.066	.068	.070
5.5000	.071	.073	.075	.076	.078
6.0000	.080	.082	.084	.085	.087
6.5000	.089	.091	.093	.095	.097
7.0000	.099	.101	.103	.105	.107
7.5000	.109	.111	.113	.116	.118
8.0000	.120	.122	.125	.127	.130
8.5000	.132	.135	.138	.141	.144
9.0000	.147	.150	.153	.157	.160
9.5000	.163	.166	.170	.173	.177
10.0000	.181	.185	.189	.194	.199
10.5000	.204	.209	.215	.221	.228
11.0000	.235	.243	.251	.261	.271
11.5000	.283	.307	.354	.431	.568
12.0000	.663	.682	.699	.713	.725
12.5000	.735	.743	.751	.759	.766
13.0000	.772	.778	.784	.789	.794
13.5000	.799	.804	.808	.812	.816
14.0000	.820	.824	.827	.831	.834
14.5000	.838	.841	.844	.847	.850
15.0000	.854	.856	.859	.862	.865
15.5000	.868	.870	.873	.875	.878
16.0000	.880	.882	.885	.887	.889
16.5000	.891	.893	.895	.898	.900
17.0000	.902	.904	.906	.908	.910
17.5000	.912	.914	.915	.917	.919
18.0000	.921	.923	.925	.926	.928
18.5000	.930	.931	.933	.935	.936
19.0000	.938	.939	.941	.942	.944
19.5000	.945	.947	.948	.949	.951
20.0000	.952	.953	.955	.956	.957
20.5000	.958	.960	.961	.962	.964
21.0000	.965	.966	.967	.968	.970
21.5000	.971	.972	.973	.975	.976
22.0000	.977	.978	.979	.981	.982
22.5000	.983	.984	.985	.986	.988

CUMULATIVE RAINFALL FRACTIONS
Output Time increment = .1000 hrs
Time on left represents time for first value in each row.

Time hrs					
23.0000	.989	.990	.991	.992	.993
23.5000	.994	.996	.997	.998	.999
24.0000	1.000				

CUMULATIVE RAINFALL FRACTIONS
Output Time increment = .1000 hrs
Time on left represents time for first value in each row.

Time hrs					
.0000	.000	.001	.002	.003	.004
.5000	.005	.006	.007	.008	.009
1.0000	.011	.012	.013	.014	.015
1.5000	.016	.017	.018	.020	.021
2.0000	.022	.023	.024	.026	.027
2.5000	.028	.029	.031	.032	.033
3.0000	.035	.036	.037	.038	.040
3.5000	.041	.042	.044	.045	.047
4.0000	.048	.049	.051	.052	.054
4.5000	.055	.057	.058	.060	.061
5.0000	.063	.065	.066	.068	.070
5.5000	.071	.073	.075	.076	.078
6.0000	.080	.082	.084	.085	.087
6.5000	.089	.091	.093	.095	.097
7.0000	.099	.101	.103	.105	.107
7.5000	.109	.111	.113	.116	.118
8.0000	.120	.122	.125	.127	.130
8.5000	.132	.135	.138	.141	.144
9.0000	.147	.150	.153	.157	.160
9.5000	.163	.166	.170	.173	.177
10.0000	.181	.185	.189	.194	.199
10.5000	.204	.209	.215	.221	.228
11.0000	.235	.243	.251	.261	.271
11.5000	.283	.307	.354	.431	.568
12.0000	.663	.682	.699	.713	.725
12.5000	.735	.743	.751	.759	.766
13.0000	.772	.778	.784	.789	.794
13.5000	.799	.804	.808	.812	.816
14.0000	.820	.824	.827	.831	.834
14.5000	.838	.841	.844	.847	.850
15.0000	.854	.856	.859	.862	.865
15.5000	.868	.870	.873	.875	.878
16.0000	.880	.882	.885	.887	.889
16.5000	.891	.893	.895	.898	.900
17.0000	.902	.904	.906	.908	.910
17.5000	.912	.914	.915	.917	.919
18.0000	.921	.923	.925	.926	.928
18.5000	.930	.931	.933	.935	.936
19.0000	.938	.939	.941	.942	.944
19.5000	.945	.947	.948	.949	.951
20.0000	.952	.953	.955	.956	.957
20.5000	.958	.960	.961	.962	.964
21.0000	.965	.966	.967	.968	.970
21.5000	.971	.972	.973	.975	.976
22.0000	.977	.978	.979	.981	.982
22.5000	.983	.984	.985	.986	.988

CUMULATIVE RAINFALL FRACTIONS
Output Time increment = .1000 hrs
Time on left represents time for first value in each row.

Time hrs					
23.0000	.989	.990	.991	.992	.993
23.5000	.994	.996	.997	.998	.999
24.0000	1.000				

CUMULATIVE RAINFALL FRACTIONS
Output Time increment = .1000 hrs
Time on left represents time for first value in each row.

Time hrs					
.0000	.000	.001	.002	.003	.004
.5000	.005	.006	.007	.008	.009
1.0000	.011	.012	.013	.014	.015
1.5000	.016	.017	.018	.020	.021
2.0000	.022	.023	.024	.026	.027
2.5000	.028	.029	.031	.032	.033
3.0000	.035	.036	.037	.038	.040
3.5000	.041	.042	.044	.045	.047
4.0000	.048	.049	.051	.052	.054
4.5000	.055	.057	.058	.060	.061
5.0000	.063	.065	.066	.068	.070
5.5000	.071	.073	.075	.076	.078
6.0000	.080	.082	.084	.085	.087
6.5000	.089	.091	.093	.095	.097
7.0000	.099	.101	.103	.105	.107
7.5000	.109	.111	.113	.116	.118
8.0000	.120	.122	.125	.127	.130
8.5000	.132	.135	.138	.141	.144
9.0000	.147	.150	.153	.157	.160
9.5000	.163	.166	.170	.173	.177
10.0000	.181	.185	.189	.194	.199
10.5000	.204	.209	.215	.221	.228
11.0000	.235	.243	.251	.261	.271
11.5000	.283	.307	.354	.431	.568
12.0000	.663	.682	.699	.713	.725
12.5000	.735	.743	.751	.759	.766
13.0000	.772	.778	.784	.789	.794
13.5000	.799	.804	.808	.812	.816
14.0000	.820	.824	.827	.831	.834
14.5000	.838	.841	.844	.847	.850
15.0000	.854	.856	.859	.862	.865
15.5000	.868	.870	.873	.875	.878
16.0000	.880	.882	.885	.887	.889
16.5000	.891	.893	.895	.898	.900
17.0000	.902	.904	.906	.908	.910
17.5000	.912	.914	.915	.917	.919
18.0000	.921	.923	.925	.926	.928
18.5000	.930	.931	.933	.935	.936
19.0000	.938	.939	.941	.942	.944
19.5000	.945	.947	.948	.949	.951
20.0000	.952	.953	.955	.956	.957
20.5000	.958	.960	.961	.962	.964
21.0000	.965	.966	.967	.968	.970
21.5000	.971	.972	.973	.975	.976
22.0000	.977	.978	.979	.981	.982
22.5000	.983	.984	.985	.986	.988

CUMULATIVE RAINFALL FRACTIONS
Output Time increment = .1000 hrs
Time on left represents time for first value in each row.

Time hrs					
23.0000	.989	.990	.991	.992	.993
23.5000	.994	.996	.997	.998	.999
24.0000	1.000				

File.... L:\1300'S\1327-MONTESSORI SCHOOL\ENGINEERING\PONDPACK\BMP DESIGN.PPW

RUNOFF CURVE NUMBER DATA

Soil/Surface Description	CN	Area acres	Impervious Adjustment %C	Impervious Adjustment %UC	Adjusted CN
IMPERVIOUS	98	.274			98.00
LAWN/GRASS AREA	74	.157			74.00
COMPOSITE AREA & WEIGHTED CN --->		.431			89.26 (89)

File.... L:\1300'S\1327-MONTESSORI SCHOOL\ENGINEERING\PONDPACK\BMP DESIGN.PPW

RUNOFF CURVE NUMBER DATA

Soil/Surface Description	CN	Area acres	Impervious Adjustment %C	Impervious Adjustment %UC	Adjusted CN
IMPERVIOUS	98	.051			98.00
LAWN/GRASS	74	.329			74.00

COMPOSITE AREA & WEIGHTED CN ---> .380 77.22 (77)

```
SCS UNIT HYDROGRAPH METHOD

STORM EVENT: 1 year storm
Duration      = 24.0000 hrs     Rain Depth = 2.8000 in
Rain Dir      = C:\HAESTAD\PPKW\RAINFALL\
Rain File -ID = SCSTYPES.RNF - TypeII  24hr
Unit Hyd Type = Default Curvilinear
HYG Dir       = L:\1300'S\1327-MONTESSORI SCHOOL\ENGINEERING\PONDPACK\
HYG File - ID =  - DA PRE ..1
Tc (Min. Tc)  = .0833 hrs
Drainage Area = .380 acres  Runoff CN= 77

============================================
Computational Time Increment   =   .01111 hrs
Computed Peak Time             =  11.9286 hrs
Computed Peak Flow             =      .54 cfs

Time Increment for HYG File    =    .0500 hrs
Peak Time, Interpolated Output =  11.9500 hrs
Peak Flow, Interpolated Output =      .53 cfs
WARNING: The difference between calculated peak flow
and interpolated peak flow is greater than 1.50%
============================================

                DRAINAGE AREA
             -------------------
             ID:DA PRE
             CN   =   77
             Area =        .380 acres
             S    =   2.9870 in
             0.2S =    .5974 in

              Cumulative Runoff
             -------------------
                      .9348 in
                       .030 ac-ft

HYG Volume...          .030 ac-ft (area under HYG curve)

***** UNIT HYDROGRAPH PARAMETERS *****

Time Concentration, Tc =   .08330 hrs (ID: None Selected)
Computational Incr, Tm =   .01111 hrs = 0.20000 Tp

Unit Hyd. Shape Factor =  483.432 (37.46% under rising limb)
K =  483.43/645.333,  K =    .7491 (also, K = 2/(1+(Tr/Tp))
Receding/Rising, Tr/Tp =   1.6698 (solved from K =   .7491)

Unit peak,          qp =     5.17 cfs
Unit peak time      Tp =   .05553 hrs
Unit receding limb, Tr =   .22213 hrs
Total unit time,    Tb =   .27767 hrs
```

```
SCS UNIT HYDROGRAPH METHOD

STORM EVENT: 2 year storm
Duration      = 24.0000 hrs     Rain Depth = 3.5000 in
Rain Dir      = C:\HAESTAD\PPKW\RAINFALL\
Rain File -ID = SCSTYPES.RNF - TypeII  24hr
Unit Hyd Type = Default Curvilinear
HYG Dir       = L:\1300'S\1327-MONTESSORI SCHOOL\ENGINEERING\PONDPACK\
HYG File - ID =  - DA PRE ..2
Tc (Min. Tc)  = .0833 hrs
Drainage Area = .380 acres  Runoff CN= 77

============================================
Computational Time Increment   =   .01111 hrs
Computed Peak Time             =  11.9286 hrs
Computed Peak Flow             =      .85 cfs

Time Increment for HYG File    =    .0500 hrs
Peak Time, Interpolated Output =  11.9500 hrs
Peak Flow, Interpolated Output =      .82 cfs
WARNING: The difference between calculated peak flow
and interpolated peak flow is greater than 1.50%
============================================

                 DRAINAGE AREA
              -------------------
              ID:DA PRE
              CN   =   77
              Area =        .380 acres
              S    =   2.9870 in
              0.2S =    .5974 in

               Cumulative Runoff
              -------------------
                      1.4305 in
                        .045 ac-ft

HYG Volume...           .045 ac-ft (area under HYG curve)

***** UNIT HYDROGRAPH PARAMETERS *****

Time Concentration, Tc =   .08330 hrs (ID: None Selected)
Computational Incr, Tm =   .01111 hrs = 0.20000 Tp

Unit Hyd. Shape Factor =  483.432 (37.46% under rising limb)
K =  483.43/645.333,  K =    .7491 (also, K = 2/(1+(Tr/Tp))
Receding/Rising, Tr/Tp =   1.6698 (solved from K =   .7491)

Unit peak,          qp =     5.17 cfs
Unit peak time      Tp =   .05553 hrs
Unit receding limb, Tr =   .22213 hrs
Total unit time,    Tb =   .27767 hrs
```

```
SCS UNIT HYDROGRAPH METHOD

STORM EVENT: 10 year storm
Duration      = 24.0000 hrs     Rain Depth = 5.8000 in
Rain Dir      = C:\HAESTAD\PPKW\RAINFALL\
Rain File -ID = SCSTYPES.RNF - TypeII  24hr
Unit Hyd Type = Default Curvilinear
HYG Dir       = L:\1300'S\1327-MONTESSORI SCHOOL\ENGINEERING\PONDPACK\
HYG File - ID =  - DA PRE .10
Tc (Min. Tc)  = .0833 hrs
Drainage Area = .380 acres  Runoff CN= 77

============================================
Computational Time Increment   =   .01111 hrs
Computed Peak Time             =  11.9175 hrs
Computed Peak Flow             =     1.97 cfs

Time Increment for HYG File    =    .0500 hrs
Peak Time, Interpolated Output =  11.9000 hrs
Peak Flow, Interpolated Output =     1.89 cfs
WARNING: The difference between calculated peak flow
and interpolated peak flow is greater than 1.50%
============================================

                 DRAINAGE AREA
               -------------------
               ID:DA PRE
               CN   =   77
               Area =        .380 acres
               S    =   2.9870 in
               0.2S =    .5974 in

                Cumulative Runoff
               -------------------
                       3.3050 in
                         .105 ac-ft

HYG Volume...            .105 ac-ft (area under HYG curve)

***** UNIT HYDROGRAPH PARAMETERS *****

Time Concentration, Tc =   .08330 hrs (ID: None Selected)
Computational Incr, Tm =   .01111 hrs = 0.20000 Tp

Unit Hyd. Shape Factor =  483.432 (37.46% under rising limb)
K =  483.43/645.333,  K =    .7491 (also, K = 2/(1+(Tr/Tp))
Receding/Rising, Tr/Tp =   1.6698 (solved from K =   .7491)

Unit peak,          qp =     5.17 cfs
Unit peak time      Tp =   .05553 hrs
Unit receding limb, Tr =   .22213 hrs
Total unit time,    Tb =   .27767 hrs
```

```
SCS UNIT HYDROGRAPH METHOD

STORM EVENT: 100 year storm
Duration      = 24.0000 hrs     Rain Depth = 8.0000 in
Rain Dir      = C:\HAESTAD\PPKW\RAINFALL\
Rain File -ID = SCSTYPES.RNF - TypeII  24hr
Unit Hyd Type = Default Curvilinear
HYG Dir       = L:\1300'S\1327-MONTESSORI SCHOOL\ENGINEERING\PONDPACK\
HYG File - ID =  - DA PRE 100
Tc (Min. Tc)  = .0833 hrs
Drainage Area = .380 acres  Runoff CN= 77

============================================
Computational Time Increment   =   .01111 hrs
Computed Peak Time             =  11.9175 hrs
Computed Peak Flow             =     3.11 cfs

Time Increment for HYG File    =    .0500 hrs
Peak Time, Interpolated Output =  11.9000 hrs
Peak Flow, Interpolated Output =     3.01 cfs
WARNING: The difference between calculated peak flow
and interpolated peak flow is greater than 1.50%
============================================

                 DRAINAGE AREA
              -------------------
              ID:DA PRE
              CN   =   77
              Area =        .380 acres
              S    =   2.9870 in
              0.2S =    .5974 in

               Cumulative Runoff
              -------------------
                      5.2744 in
                        .167 ac-ft

HYG Volume...           .167 ac-ft (area under HYG curve)

***** UNIT HYDROGRAPH PARAMETERS *****

Time Concentration, Tc =   .08330 hrs (ID: None Selected)
Computational Incr, Tm =   .01111 hrs = 0.20000 Tp

Unit Hyd. Shape Factor =  483.432 (37.46% under rising limb)
K =  483.43/645.333,  K =    .7491 (also, K = 2/(1+(Tr/Tp))
Receding/Rising, Tr/Tp =   1.6698 (solved from K =   .7491)

Unit peak,          qp =     5.17 cfs
Unit peak time      Tp =   .05553 hrs
Unit receding limb, Tr =   .22213 hrs
Total unit time,    Tb =   .27767 hrs
```

```
SCS UNIT HYDROGRAPH METHOD

STORM EVENT: 1 year storm
Duration      = 24.0000 hrs     Rain Depth = 2.8000 in
Rain Dir      = C:\HAESTAD\PPKW\RAINFALL\
Rain File -ID = SCSTYPES.RNF - TypeII  24hr
Unit Hyd Type = Default Curvilinear
HYG Dir       = L:\1300'S\1327-MONTESSORI SCHOOL\ENGINEERING\PONDPACK\
HYG File - ID =  - DA1 POST ..1
Tc            = .1000 hrs
Drainage Area = .431 acres  Runoff CN= 89

============================================
Computational Time Increment   =   .01333 hrs
Computed Peak Time             =  11.9333 hrs
Computed Peak Flow             =     1.12 cfs

Time Increment for HYG File    =    .0500 hrs
Peak Time, Interpolated Output =  11.9500 hrs
Peak Flow, Interpolated Output =     1.10 cfs
WARNING: The difference between calculated peak flow
and interpolated peak flow is greater than 1.50%
============================================

                DRAINAGE AREA
              -------------------
              ID:DA POST
              CN   =   89
              Area =        .431 acres
              S    =   1.2360 in
              0.2S =    .2472 in

               Cumulative Runoff
              -------------------
                      1.7200 in
                        .062 ac-ft

HYG Volume...           .062 ac-ft (area under HYG curve)

***** UNIT HYDROGRAPH PARAMETERS *****

Time Concentration, Tc =   .10000 hrs (ID: None Selected)
Computational Incr, Tm =   .01333 hrs = 0.20000 Tp

Unit Hyd. Shape Factor =  483.432 (37.46% under rising limb)
K =  483.43/645.333,  K =    .7491 (also, K = 2/(1+(Tr/Tp))
Receding/Rising, Tr/Tp =   1.6698 (solved from K =   .7491)

Unit peak,          qp =     4.88 cfs
Unit peak time      Tp =   .06667 hrs
Unit receding limb, Tr =   .26667 hrs
Total unit time,    Tb =   .33333 hrs
```

```
SCS UNIT HYDROGRAPH METHOD

STORM EVENT: 2 year storm
Duration      = 24.0000 hrs     Rain Depth = 3.5000 in
Rain Dir      = C:\HAESTAD\PPKW\RAINFALL\
Rain File -ID = SCSTYPES.RNF - TypeII  24hr
Unit Hyd Type = Default Curvilinear
HYG Dir       = L:\1300'S\1327-MONTESSORI SCHOOL\ENGINEERING\PONDPACK\
HYG File - ID =  - DA1 POST ..2
Tc            = .1000 hrs
Drainage Area = .431 acres  Runoff CN= 89

============================================
Computational Time Increment   =   .01333 hrs
Computed Peak Time             =  11.9333 hrs
Computed Peak Flow             =     1.53 cfs

Time Increment for HYG File    =    .0500 hrs
Peak Time, Interpolated Output =  11.9500 hrs
Peak Flow, Interpolated Output =     1.49 cfs
WARNING: The difference between calculated peak flow
and interpolated peak flow is greater than 1.50%
============================================

                DRAINAGE AREA
             -------------------
             ID:DA POST
             CN   =   89
             Area =        .431 acres
             S    =   1.2360 in
             0.2S =    .2472 in

              Cumulative Runoff
             -------------------
                     2.3572 in
                       .085 ac-ft

HYG Volume...           .085 ac-ft (area under HYG curve)

***** UNIT HYDROGRAPH PARAMETERS *****

Time Concentration, Tc =   .10000 hrs (ID: None Selected)
Computational Incr, Tm =   .01333 hrs = 0.20000 Tp

Unit Hyd. Shape Factor =  483.432 (37.46% under rising limb)
K =  483.43/645.333,  K =    .7491 (also, K = 2/(1+(Tr/Tp))
Receding/Rising, Tr/Tp =   1.6698 (solved from K =   .7491)

Unit peak,          qp =     4.88 cfs
Unit peak time      Tp =   .06667 hrs
Unit receding limb, Tr =   .26667 hrs
Total unit time,    Tb =   .33333 hrs
```

```
SCS UNIT HYDROGRAPH METHOD

STORM EVENT: 10 year storm
Duration      = 24.0000 hrs     Rain Depth = 5.8000 in
Rain Dir      = C:\HAESTAD\PPKW\RAINFALL\
Rain File -ID = SCSTYPES.RNF - TypeII  24hr
Unit Hyd Type = Default Curvilinear
HYG Dir       = L:\1300'S\1327-MONTESSORI SCHOOL\ENGINEERING\PONDPACK\
HYG File - ID =  - DA1 POST .10
Tc            = .1000 hrs
Drainage Area = .431 acres  Runoff CN= 89

=============================================
Computational Time Increment   =   .01333 hrs
Computed Peak Time             =  11.9333 hrs
Computed Peak Flow             =     2.85 cfs

Time Increment for HYG File    =    .0500 hrs
Peak Time, Interpolated Output =  11.9500 hrs
Peak Flow, Interpolated Output =     2.77 cfs
WARNING: The difference between calculated peak flow
and interpolated peak flow is greater than 1.50%
=============================================

                DRAINAGE AREA
             -------------------
             ID:DA POST
             CN   =   89
             Area =        .431 acres
             S    =   1.2360 in
             0.2S =    .2472 in

              Cumulative Runoff
             -------------------
                     4.5419 in
                       .163 ac-ft

HYG Volume...           .163 ac-ft (area under HYG curve)

***** UNIT HYDROGRAPH PARAMETERS *****

Time Concentration, Tc =   .10000 hrs (ID: None Selected)
Computational Incr, Tm =   .01333 hrs = 0.20000 Tp

Unit Hyd. Shape Factor =  483.432 (37.46% under rising limb)
K =  483.43/645.333,  K =    .7491 (also, K = 2/(1+(Tr/Tp))
Receding/Rising, Tr/Tp =   1.6698 (solved from K =   .7491)

Unit peak,          qp =     4.88 cfs
Unit peak time      Tp =   .06667 hrs
Unit receding limb, Tr =   .26667 hrs
Total unit time,    Tb =   .33333 hrs
```

```
SCS UNIT HYDROGRAPH METHOD

STORM EVENT: 100 year storm
Duration      = 24.0000 hrs     Rain Depth = 8.0000 in
Rain Dir      = C:\HAESTAD\PPKW\RAINFALL\
Rain File -ID = SCSTYPES.RNF - TypeII  24hr
Unit Hyd Type = Default Curvilinear
HYG Dir       = L:\1300'S\1327-MONTESSORI SCHOOL\ENGINEERING\PONDPACK\
HYG File - ID =  - DA1 POST 100
Tc            = .1000 hrs
Drainage Area = .431 acres  Runoff CN= 89

============================================
Computational Time Increment   =   .01333 hrs
Computed Peak Time             =  11.9200 hrs
Computed Peak Flow             =     4.10 cfs

Time Increment for HYG File    =    .0500 hrs
Peak Time, Interpolated Output =  11.9500 hrs
Peak Flow, Interpolated Output =     3.98 cfs
WARNING: The difference between calculated peak flow
and interpolated peak flow is greater than 1.50%
============================================

                DRAINAGE AREA
             -------------------
             ID:DA POST
             CN   =   89
             Area =        .431 acres
             S    =   1.2360 in
             0.2S =    .2472 in

              Cumulative Runoff
             -------------------
                     6.6868 in
                       .240 ac-ft

HYG Volume...           .240 ac-ft (area under HYG curve)

***** UNIT HYDROGRAPH PARAMETERS *****

Time Concentration, Tc =   .10000 hrs (ID: None Selected)
Computational Incr, Tm =   .01333 hrs = 0.20000 Tp

Unit Hyd. Shape Factor =  483.432 (37.46% under rising limb)
K =  483.43/645.333,  K =    .7491 (also, K = 2/(1+(Tr/Tp))
Receding/Rising, Tr/Tp =   1.6698 (solved from K =   .7491)

Unit peak,          qp =     4.88 cfs
Unit peak time      Tp =   .06667 hrs
Unit receding limb, Tr =   .26667 hrs
Total unit time,    Tb =   .33333 hrs
```

File.... L:\1300'S\1327-MONTESSORI SCHOOL\ENGINEERING\PONDPACK\BMP DESIGN.PPW

Elevation (ft)	Planimeter (sq.in)	Area (acres)	A1+A2+sqr(A1*A2) (acres)	Volume (ac-ft)	Volume Sum (ac-ft)
62.50	-----	.0105	.0000	.000	.000
63.50	-----	.0230	.0490	.016	.016
63.60	-----	.0242	.0708	.002	.019
64.50	-----	.0340	.0869	.026	.045

POND VOLUME EQUATIONS

* Incremental volume computed by the Conic Method for Reservoir Volumes.

Volume = (1/3) * (EL2-EL1) * (Area1 + Area2 + sq.rt.(Area1*Area2))

where: EL1, EL2 = Lower and upper elevations of the increment
Area1,Area2 = Areas computed for EL1, EL2, respectively
Volume = Incremental volume between EL1 and EL2

File.... L:\1300'S\1327-MONTESSORI SCHOOL\ENGINEERING\PONDPACK\BMP DESIGN.PPW

Elevation (ft)	Planimeter (sq.in)	Area (acres)	A1+A2+sqr(A1*A2) (acres)	Volume (ac-ft)	Volume Sum (ac-ft)
62.50	-----	.0013	.0000	.000	.000
63.50	-----	.0041	.0077	.003	.003
64.20	-----	.0068	.0162	.004	.006
64.50	-----	.0075	.0215	.002	.008

POND VOLUME EQUATIONS

* Incremental volume computed by the Conic Method for Reservoir Volumes.

Volume = (1/3) * (EL2-EL1) * (Area1 + Area2 + sq.rt.(Area1*Area2))

where: EL1, EL2 = Lower and upper elevations of the increment
Area1,Area2 = Areas computed for EL1, EL2, respectively
Volume = Incremental volume between EL1 and EL2

File.... L:\1300'S\1327-MONTESSORI SCHOOL\ENGINEERING\PONDPACK\BMP DESIGN.PPW

REQUESTED POND WS ELEVATIONS:

Min. Elev.= 62.50 ft
Increment = .10 ft
Max. Elev.= 64.50 ft

****
OUTLET CONNECTIVITY
****

---> Forward Flow Only (UpStream to DnStream)
<--- Reverse Flow Only (DnStream to UpStream)
<---> Forward and Reverse Both Allowed

Structure	No.		Outfall	E1, ft	E2, ft
Weir-Rectangular		--->	TW	63.600	64.500
Culvert-Circular		--->	TW	62.500	64.500

TW SETUP, DS Channel

File.... L:\1300'S\1327-MONTESSORI SCHOOL\ENGINEERING\PONDPACK\BMP DESIGN.PPW

OUTLET STRUCTURE INPUT DATA

```
Structure ID      =
Structure Type    = Weir-Rectangular
-----------------------------------
# of Openings     =          1
Crest Elev.       =      63.60 ft
Weir Length       =      18.00 ft
Weir Coeff.       =   3.333000

Weir TW effects     (Use adjustment equation)
```

Emergency

OUTLET STRUCTURE INPUT DATA

```
Structure ID      =
Structure Type    = Culvert-Circular
-----------------------------------
No. Barrels       =         1
Barrel Diameter   =     .2500 ft   3"
Upstream Invert   =     62.50 ft✓
Dnstream Invert   =     62.40 ft✓
Horiz. Length     =     18.50 ft
Barrel Length     =     18.50 ft
Barrel Slope      =    .00541 ft/ft

OUTLET CONTROL DATA...
Mannings n        =     .0120
Ke                =     .2000  (forward entrance loss)
Kb                =   .169200  (per ft of full flow)
Kr                =     .2000  (reverse entrance loss)
HW Convergence    =      .001  +/- ft

INLET CONTROL DATA...
Equation form     =         1
Inlet Control K   =     .0098
Inlet Control M   =    2.0000
Inlet Control c   =    .03980
Inlet Control Y   =     .6700
T1 ratio (HW/D)   =     1.171
T2 ratio (HW/D)   =     1.304
Slope Factor      =     -.500

Use unsubmerged inlet control Form 1 equ. below T1 elev.
Use   submerged inlet control Form 1 equ. above T2 elev.

In transition zone between unsubmerged and submerged inlet control,
interpolate between flows at T1 & T2...
At T1 Elev =     62.79 ft  --->  Flow =       .09 cfs
At T2 Elev =     62.83 ft  --->  Flow =       .10 cfs


Structure ID      = TW
Structure Type    = TW SETUP, DS Channel
-----------------------------------
FREE OUTFALL CONDITIONS SPECIFIED

CONVERGENCE TOLERANCES...
Maximum Iterations=    30
Min. TW tolerance =    .01 ft
Max. TW tolerance =    .01 ft
Min. HW tolerance =    .01 ft
Max. HW tolerance =    .01 ft
Min.  Q tolerance =    .10 cfs
Max.  Q tolerance =    .10 cfs
```

RATING TABLE FOR ONE OUTLET TYPE

Structure ID = (Weir-Rectangular)

Upstream ID = (Pond Water Surface)
DNstream ID = TW (Pond Outfall)

WS Elev,Device Q		Tail Water		Notes
WS Elev. ft	Q cfs	TW Elev ft	Converge +/-ft	Computation Messages
62.50	.00	Free Outfall		HW & TW below Inv.El.=63.600
62.60	.00	Free Outfall		HW & TW below Inv.El.=63.600
62.70	.00	Free Outfall		HW & TW below Inv.El.=63.600
62.80	.00	Free Outfall		HW & TW below Inv.El.=63.600
62.90	.00	Free Outfall		HW & TW below Inv.El.=63.600
63.00	.00	Free Outfall		HW & TW below Inv.El.=63.600
63.10	.00	Free Outfall		HW & TW below Inv.El.=63.600
63.20	.00	Free Outfall		HW & TW below Inv.El.=63.600
63.30	.00	Free Outfall		HW & TW below Inv.El.=63.600
63.40	.00	Free Outfall		HW & TW below Inv.El.=63.600
63.50	.00	Free Outfall		HW & TW below Inv.El.=63.600
63.60	.00	Free Outfall		H=.00; Htw=.00; Qfree=.00;
63.70	1.90	Free Outfall		H=.10; Htw=.00; Qfree=1.90;
63.80	5.37	Free Outfall		H=.20; Htw=.00; Qfree=5.37;
63.90	9.86	Free Outfall		H=.30; Htw=.00; Qfree=9.86;
64.00	15.18	Free Outfall		H=.40; Htw=.00; Qfree=15.18;
64.10	21.21	Free Outfall		H=.50; Htw=.00; Qfree=21.21;
64.20	27.88	Free Outfall		H=.60; Htw=.00; Qfree=27.88;
64.30	35.14	Free Outfall		H=.70; Htw=.00; Qfree=35.14;
64.40	42.93	Free Outfall		H=.80; Htw=.00; Qfree=42.93;
64.50	51.22	Free Outfall		H=.90; Htw=.00; Qfree=51.22;

RATING TABLE FOR ONE OUTLET TYPE

Structure ID = (Culvert-Circular)

Mannings open channel maximum capacity: .08 cfs
Upstream ID = (Pond Water Surface)
DNstream ID = TW (Pond Outfall)

WS Elev,Device Q		Tail Water		Notes
WS Elev. ft	Q cfs	TW Elev ft	Converge +/-ft	Computation Messages
62.50	.00	Free Outfall		
		Upstream HW & DNstream TW < Inv.El		
62.60	.01	Free Outfall		
		BACKWATER CONTROL.. Vh= .024ft hwDi= .072ft Lbw= 18.5ft		
62.70	.05	Free Outfall		
		BACKWATER CONTROL.. Vh= .039ft hwDi= .154ft Lbw= 18.5ft		
62.80	.08	Free Outfall		
		BACKWATER CONTROL.. Vh= .047ft hwDi= .244ft Lbw= 18.5ft		
62.90	.10	Free Outfall		
		FULL FLOW...Lfull=13.20ft Vh=.065ft HL=.222ft		
63.00	.12	Free Outfall		
		FULL FLOW...Lfull=16.16ft Vh=.086ft HL=.337ft		
63.10	.13	Free Outfall		
		FULL FLOW...Lfull=17.43ft Vh=.107ft HL=.444ft		
63.20	.14	Free Outfall		
		FULL FLOW...Lfull=17.77ft Vh=.130ft HL=.546ft		
63.30	.15	Free Outfall		
		FULL FLOW...Lfull=18.05ft Vh=.152ft HL=.648ft		
63.40	.16	Free Outfall		
		FULL FLOW...Lfull=18.25ft Vh=.175ft HL=.749ft		
63.50	.18	Free Outfall		
		FULL FLOW...Lfull=18.30ft Vh=.198ft HL=.849ft		
63.60	.18	Free Outfall		
		FULL FLOW...Lfull=18.36ft Vh=.220ft HL=.949ft		
63.70	.19	Free Outfall		
		FULL FLOW...Lfull=18.40ft Vh=.243ft HL=1.049ft		
63.80	.20	Free Outfall		
		FULL FLOW...Lfull=18.42ft Vh=.266ft HL=1.149ft		
63.90	.21	Free Outfall		
		FULL FLOW...Lfull=18.45ft Vh=.289ft HL=1.250ft		
64.00	.22	Free Outfall		
		FULL FLOW...Lfull=18.45ft Vh=.312ft HL=1.349ft		
64.10	.23	Free Outfall		
		FULL FLOW...Lfull=18.46ft Vh=.335ft HL=1.450ft		

RATING TABLE FOR ONE OUTLET TYPE

Structure ID = (Culvert-Circular)

Mannings open channel maximum capacity: .08 cfs
Upstream ID = (Pond Water Surface)
DNstream ID = TW (Pond Outfall)

WS Elev,Device Q		Tail Water		Notes
WS Elev. ft	Q cfs	TW Elev ft	Converge +/-ft	Computation Messages
64.20	.24	Free Outfall		
		FULL FLOW...Lfull=18.48ft		Vh=.358ft HL=1.550ft
64.30	.24	Free Outfall		
		FULL FLOW...Lfull=18.48ft		Vh=.381ft HL=1.650ft
64.40	.25	Free Outfall		
		FULL FLOW...Lfull=18.48ft		Vh=.404ft HL=1.749ft
64.50	.26	Free Outfall		
		FULL FLOW...Lfull=18.48ft		Vh=.427ft HL=1.849ft

File.... L:\1300'S\1327-MONTESSORI SCHOOL\ENGINEERING\PONDPACK\BMP DESIGN.PPW

***** COMPOSITE OUTFLOW SUMMARY ****

WS Elev, Total Q		Notes		
		Converge		
Elev. ft	Q cfs	TW Elev ft	Error +/-ft	Contributing Structures
62.50	.00	Free Outfall		None contributing
62.60	.01	Free Outfall		
62.70	.05	Free Outfall		
62.80	.08	Free Outfall		
62.90	.10	Free Outfall		
63.00	.12	Free Outfall		
63.10	.13	Free Outfall		
63.20	.14	Free Outfall		
63.30	.15	Free Outfall		
63.40	.16	Free Outfall		
63.50	.18	Free Outfall		
63.60	.18	Free Outfall		
63.70	2.09	Free Outfall		
63.80	5.57	Free Outfall		
63.90	10.07	Free Outfall		
64.00	15.40	Free Outfall		
64.10	21.44	Free Outfall		
64.20	28.12	Free Outfall		
64.30	35.38	Free Outfall		
64.40	43.18	Free Outfall		
64.50	51.48	Free Outfall		

File.... L:\1300'S\1327-MONTESSORI SCHOOL\ENGINEERING\PONDPACK\BMP DESIGN.PPW

REQUESTED POND WS ELEVATIONS:

Min. Elev.= 62.50 ft
Increment = .10 ft
Max. Elev.= 64.50 ft

****
OUTLET CONNECTIVITY
****

---> Forward Flow Only (UpStream to DnStream)
<--- Reverse Flow Only (DnStream to UpStream)
<---> Forward and Reverse Both Allowed

Structure	No.		Outfall	E1, ft	E2, ft
Culvert-Circular		--->	TW	62.750	64.500
TW SETUP, DS Channel					

OUTLET STRUCTURE INPUT DATA

```
Structure ID      =
Structure Type    = Culvert-Circular
-----------------------------------
No. Barrels       =         1
Barrel Diameter   =     .0833 ft
Upstream Invert   =     62.75 ft
Dnstream Invert   =     62.50 ft
Horiz. Length     =     18.50 ft
Barrel Length     =     18.50 ft
Barrel Slope      =    .01351 ft/ft

OUTLET CONTROL DATA...
Mannings n        =     .0120
Ke                =     .2000  (forward entrance loss)
Kb                =   .732477  (per ft of full flow)
Kr                =     .2000  (reverse entrance loss)
HW Convergence    =      .001  +/- ft

INLET CONTROL DATA...
Equation form     =         1
Inlet Control K   =     .0098
Inlet Control M   =    2.0000
Inlet Control c   =    .03980
Inlet Control Y   =     .6700
T1 ratio (HW/D)   =      .809
T2 ratio (HW/D)   =     1.300
Slope Factor      =     -.500

Use unsubmerged inlet control Form 1 equ. below T1 elev.
Use   submerged inlet control Form 1 equ. above T2 elev.

In transition zone between unsubmerged and submerged inlet control,
interpolate between flows at T1 & T2...
At T1 Elev =     62.82 ft  --->  Flow =       .01 cfs
At T2 Elev =     62.86 ft  --->  Flow =       .01 cfs


Structure ID      = TW
Structure Type    = TW SETUP, DS Channel
-----------------------------------
FREE OUTFALL CONDITIONS SPECIFIED

CONVERGENCE TOLERANCES...
Maximum Iterations=    30
Min. TW tolerance =    .01 ft
Max. TW tolerance =    .01 ft
Min. HW tolerance =    .01 ft
Max. HW tolerance =    .01 ft
Min.  Q tolerance =    .10 cfs
Max.  Q tolerance =    .10 cfs
```

RATING TABLE FOR ONE OUTLET TYPE

Structure ID = (Culvert-Circular)

Mannings open channel maximum capacity: .01 cfs
Upstream ID = (Pond Water Surface)
DNstream ID = TW (Pond Outfall)

WS Elev,Device Q Tail Water Notes

WS Elev. ft	Q cfs	TW Elev ft	Converge +/-ft	Computation Messages
62.50	.00	Free Outfall		
		Upstream HW & DNstream TW < Inv.El		
62.60	.00	Free Outfall		
		Upstream HW & DNstream TW < Inv.El		
62.70	.00	Free Outfall		
		Upstream HW & DNstream TW < Inv.El		
62.75	.00	Free Outfall		
		Upstream HW & DNstream TW < Inv.El		
62.80	.00	Free Outfall		
		RELAXED CONVERGENCE: HW +/-999999.000ft; Q +/-.0000cfs		
62.90	.01	Free Outfall		
		FULL FLOW...Lfull=11.33ft Vh=.023ft HL=.219ft		
63.00	.01	Free Outfall		
		FULL FLOW...Lfull=17.59ft Vh=.029ft HL=.404ft		
63.10	.01	Free Outfall		
		FULL FLOW...Lfull=18.38ft Vh=.035ft HL=.516ft		
63.20	.01	Free Outfall		
		FULL FLOW...Lfull=17.64ft Vh=.043ft HL=.605ft		
63.30	.01	Free Outfall		
		FULL FLOW...Lfull=18.36ft Vh=.049ft HL=.715ft		
63.40	.01	Free Outfall		
		FULL FLOW...Lfull=18.06ft Vh=.056ft HL=.811ft		
63.50	.01	Free Outfall		
		FULL FLOW...Lfull=18.48ft Vh=.062ft HL=.917ft		
63.60	.01	Free Outfall		
		FULL FLOW...Lfull=18.48ft Vh=.069ft HL=1.016ft		
63.70	.01	Free Outfall		
		FULL FLOW...Lfull=18.48ft Vh=.076ft HL=1.116ft		
63.80	.01	Free Outfall		
		FULL FLOW...Lfull=18.48ft Vh=.083ft HL=1.217ft		
63.90	.01	Free Outfall		
		FULL FLOW...Lfull=18.48ft Vh=.089ft HL=1.317ft		
64.00	.01	Free Outfall		
		FULL FLOW...Lfull=18.48ft Vh=.096ft HL=1.416ft		

RATING TABLE FOR ONE OUTLET TYPE

Structure ID = (Culvert-Circular)

Mannings open channel maximum capacity: .01 cfs
Upstream ID = (Pond Water Surface)
DNstream ID = TW (Pond Outfall)

WS Elev,Device Q Tail Water Notes

WS Elev. ft	Q cfs	TW Elev ft	Converge +/-ft	Computation Messages
64.10	.01	Free Outfall		
		FULL FLOW...Lfull=18.48ft	Vh=.103ft	HL=1.517ft
64.20	.01	Free Outfall		
		FULL FLOW...Lfull=18.48ft	Vh=.110ft	HL=1.616ft
64.30	.01	Free Outfall		
		FULL FLOW...Lfull=18.48ft	Vh=.116ft	HL=1.716ft
64.40	.02	Free Outfall		
		FULL FLOW...Lfull=18.48ft	Vh=.123ft	HL=1.816ft
64.50	.02	Free Outfall		
		FULL FLOW...Lfull=18.48ft	Vh=.130ft	HL=1.916ft

***** COMPOSITE OUTFLOW SUMMARY ****

WS Elev, Total Q		Notes		
		Converge		
Elev. ft	Q cfs	TW Elev ft	Error +/-ft	Contributing Structures
62.50	.00	Free Outfall		None contributing
62.60	.00	Free Outfall		None contributing
62.70	.00	Free Outfall		None contributing
62.75	.00	Free Outfall		None contributing
62.80	.00	Free Outfall		
62.90	.01	Free Outfall		
63.00	.01	Free Outfall		
63.10	.01	Free Outfall		
63.20	.01	Free Outfall		
63.30	.01	Free Outfall		
63.40	.01	Free Outfall		
63.50	.01	Free Outfall		
63.60	.01	Free Outfall		
63.70	.01	Free Outfall		
63.80	.01	Free Outfall		
63.90	.01	Free Outfall		
64.00	.01	Free Outfall		
64.10	.01	Free Outfall		
64.20	.01	Free Outfall		
64.30	.01	Free Outfall		
64.40	.02	Free Outfall		
64.50	.02	Free Outfall		

TOTAL POND OUTFLOW CURVE FOR MULTIPLE OUTFALLS

Contributing Outfalls:
Outfall 1: SPILLWAY 1 100 (SPILLWAY 1)
Outfall 2: PRE TREAT OUT 100 (PRE-TREAT OUTLET)

POND HW Elev, ft	OUTFALL 1 Flow, cfs	OUTFALL 2 Flow, cfs	TOTAL Flow, cfs
62.50	.00	.00	.00
62.60	.00	.00	.00
62.70	.00	.00	.00
62.80	.00	.00	.00
62.90	.00	.01	.01
63.00	.00	.01	.01
63.10	.00	.01	.01
63.20	.00	.01	.01
63.30	.00	.01	.01
63.40	.00	.01	.01
63.50	.00	.01	.01
63.60	.00	.01	.01
63.70	.00	.01	.01
63.80	.00	.01	.01
63.90	.00	.01	.01
64.00	.00	.01	.01
64.10	.00	.01	.01
64.20	.00	.01	.01
64.30	1.84	.01	1.86
64.40	5.22	.02	5.23
64.50	9.58	.02	9.60

SUMMARY FOR HYDROGRAPH ADDITION
at Node: DETENTION IN

HYG Directory: L:\1300'S\1327-MONTESSORI SCHOOL\ENGINEERING\PONDPACK\

Upstream Link ID	Upstream Node ID	HYG file	HYG ID	HYG tag
SPILLWAY 1	PRE-TREATMENTIN		SPILLWAY 1	..1

INFLOWS TO: DETENTION IN

HYG file	HYG ID	HYG tag	Volume ac-ft	Peak Time hrs	Peak Flow cfs
	SPILLWAY 1	..1	.039	11.9500	1.11

TOTAL FLOW INTO: DETENTION IN

HYG file	HYG ID	HYG tag	Volume ac-ft	Peak Time hrs	Peak Flow cfs
	DETENTION IN	..1	.039	11.9500	1.11

TOTAL NODE INFLOW...
HYG file =
HYG ID = DETENTION IN
HYG Tag = ..1

Peak Discharge = 1.11 cfs
Time to Peak = 11.9500 hrs
HYG Volume = .039 ac-ft

HYDROGRAPH ORDINATES (cfs)
Output Time increment = .0500 hrs
Time on left represents time for first value in each row.

Time hrs					
11.7000	.00	.42	.46	.73	.98
11.9500	1.11	.97	.77	.40	.22
12.2000	.18	.15	.14	.13	.12
12.4500	.10	.09	.08	.08	.07
12.7000	.07	.07	.06	.06	.06
12.9500	.06	.05	.05	.05	.05
13.2000	.05	.04	.04	.04	.04
13.4500	.04	.04	.04	.03	.03
13.7000	.03	.03	.03	.03	.03
13.9500	.03	.03	.03	.02	.02
14.2000	.02	.02	.02	.02	.02
14.4500	.02	.02	.02	.02	.02
14.7000	.02	.02	.02	.02	.02
14.9500	.02	.02	.02	.02	.02
15.2000	.02	.02	.02	.02	.01
15.4500	.01	.01	.01	.01	.01
15.7000	.01	.01	.01	.01	.01
15.9500	.01	.01	.01	.01	.01
16.2000	.01	.01	.01	.01	.01
16.4500	.01	.01	.01	.01	.01
16.7000	.01	.01	.01	.01	.01
16.9500	.01	.01	.01	.01	.01
17.2000	.01	.01	.01	.01	.01
17.4500	.01	.01	.01	.01	.01
17.7000	.01	.01	.01	.01	.01
17.9500	.01	.01	.00	.00	.00
18.2000	.00	.00	.00	.00	.00
18.4500	.00	.00	.00	.00	.00
18.7000	.00	.00	.00	.00	.00
18.9500	.00	.00	.00	.00	.00
19.2000	.00				

SUMMARY FOR HYDROGRAPH ADDITION
at Node: DETENTION IN

HYG Directory: L:\1300'S\1327-MONTESSORI SCHOOL\ENGINEERING\PONDPACK\

Upstream Link ID	Upstream Node ID	HYG file	HYG ID	HYG tag
SPILLWAY 1	PRE-TREATMENTIN		SPILLWAY 1	..2

INFLOWS TO: DETENTION IN

HYG file	HYG ID	HYG tag	Volume ac-ft	Peak Time hrs	Peak Flow cfs
	SPILLWAY 1	..2	.060	11.9500	1.50

TOTAL FLOW INTO: DETENTION IN

HYG file	HYG ID	HYG tag	Volume ac-ft	Peak Time hrs	Peak Flow cfs
	DETENTION IN	..2	.060	11.9500	1.50

TOTAL NODE INFLOW...
HYG file =
HYG ID = DETENTION IN
HYG Tag = ..2

Peak Discharge = 1.50 cfs
Time to Peak = 11.9500 hrs
HYG Volume = .060 ac-ft

HYDROGRAPH ORDINATES (cfs)
Output Time increment = .0500 hrs
Time on left represents time for first value in each row.

Time hrs					
11.4500	.00	.08	.12	.17	.26
11.7000	.38	.53	.71	.98	1.38
11.9500	1.50	1.32	1.03	.54	.30
12.2000	.25	.20	.19	.17	.16
12.4500	.14	.13	.11	.11	.10
12.7000	.09	.09	.09	.08	.08
12.9500	.08	.07	.07	.07	.07
13.2000	.06	.06	.06	.06	.06
13.4500	.05	.05	.05	.05	.05
13.7000	.05	.04	.04	.04	.04
13.9500	.04	.04	.04	.04	.04
14.2000	.03	.03	.03	.03	.03
14.4500	.03	.03	.03	.03	.03
14.7000	.03	.03	.03	.03	.03
14.9500	.03	.03	.03	.03	.03
15.2000	.03	.03	.02	.02	.02
15.4500	.02	.02	.02	.02	.02
15.7000	.02	.02	.02	.02	.02
15.9500	.02	.02	.02	.02	.02
16.2000	.02	.02	.02	.02	.02
16.4500	.02	.02	.02	.02	.02
16.7000	.02	.02	.01	.01	.01
16.9500	.01	.01	.01	.01	.01
17.2000	.01	.01	.01	.01	.01
17.4500	.01	.01	.01	.01	.01
17.7000	.01	.01	.01	.01	.01
17.9500	.01	.01	.01	.01	.01
18.2000	.01	.01	.01	.01	.01
18.4500	.01	.01	.01	.01	.01
18.7000	.01	.01	.01	.01	.01
18.9500	.01	.01	.01	.01	.01
19.2000	.01	.01	.01	.01	.01
19.4500	.01	.01	.01	.01	.01

HYDROGRAPH ORDINATES (cfs)
Output Time increment = .0500 hrs
Time on left represents time for first value in each row.

Time hrs					
19.7000	.01	.00	.00	.00	.00
19.9500	.00	.00	.00	.00	.00
20.2000	.00	.00	.00	.00	.00
20.4500	.00	.00	.00	.00	.00
20.7000	.00	.00	.00	.00	.00
20.9500	.00	.00	.00	.00	.00
21.2000	.00	.00	.00	.00	.00
21.4500	.00	.00	.00	.00	.00
21.7000	.00	.00	.00	.00	.00
21.9500	.00	.00	.00	.00	.00
22.2000	.00	.00	.00	.00	.00
22.4500	.00	.00	.00	.00	.00
22.7000	.00	.00	.00		

SUMMARY FOR HYDROGRAPH ADDITION
at Node: DETENTION IN

HYG Directory: L:\1300'S\1327-MONTESSORI SCHOOL\ENGINEERING\PONDPACK\

Upstream Link ID	Upstream Node ID	HYG file	HYG ID	HYG tag
SPILLWAY 1	PRE-TREATMENTIN		SPILLWAY 1	.10

INFLOWS TO: DETENTION IN

HYG file	HYG ID	HYG tag	Volume ac-ft	Peak Time hrs	Peak Flow cfs
	SPILLWAY 1	.10	.136	11.9500	2.77

TOTAL FLOW INTO: DETENTION IN

HYG file	HYG ID	HYG tag	Volume ac-ft	Peak Time hrs	Peak Flow cfs
	DETENTION IN	.10	.136	11.9500	2.77

TOTAL NODE INFLOW...
HYG file =
HYG ID = DETENTION IN
HYG Tag = .10

Peak Discharge = 2.77 cfs
Time to Peak = 11.9500 hrs
HYG Volume = .136 ac-ft

HYDROGRAPH ORDINATES (cfs)
Output Time increment = .0500 hrs
Time on left represents time for first value in each row.

Time hrs					
9.7500	.00	.01	.06	.03	.05
10.0000	.04	.05	.05	.05	.05
10.2500	.06	.06	.06	.06	.07
10.5000	.07	.07	.08	.08	.08
10.7500	.09	.09	.10	.10	.10
11.0000	.11	.11	.12	.13	.14
11.2500	.15	.16	.17	.18	.19
11.5000	.20	.26	.38	.55	.81
11.7500	1.08	1.41	1.91	2.67	2.77
12.0000	2.42	1.84	1.01	.53	.46
12.2500	.36	.36	.31	.30	.26
12.5000	.24	.21	.20	.18	.18
12.7500	.17	.17	.16	.15	.15
13.0000	.14	.14	.13	.13	.12
13.2500	.12	.12	.11	.11	.11
13.5000	.10	.10	.10	.10	.09
13.7500	.09	.09	.09	.08	.08
14.0000	.08	.08	.07	.07	.07
14.2500	.07	.07	.07	.07	.07
14.5000	.07	.07	.07	.07	.06
14.7500	.06	.06	.06	.06	.06
15.0000	.06	.06	.06	.06	.06
15.2500	.06	.05	.05	.05	.05
15.5000	.05	.05	.05	.05	.05
15.7500	.05	.05	.05	.04	.04
16.0000	.04	.04	.04	.04	.04
16.2500	.04	.04	.04	.04	.04
16.5000	.04	.04	.04	.04	.04
16.7500	.04	.04	.04	.04	.04
17.0000	.04	.04	.04	.03	.03
17.2500	.03	.03	.03	.03	.03
17.5000	.03	.03	.03	.03	.03
17.7500	.03	.03	.03	.03	.03

HYDROGRAPH ORDINATES (cfs)
Output Time increment = .0500 hrs
Time on left represents time for first value in each row.

Time hrs					
18.0000	.03	.03	.03	.03	.03
18.2500	.03	.03	.03	.03	.03
18.5000	.03	.03	.03	.03	.03
18.7500	.03	.02	.02	.02	.02
19.0000	.02	.02	.02	.02	.02
19.2500	.02	.02	.02	.02	.02
19.5000	.02	.02	.02	.02	.02
19.7500	.02	.02	.02	.02	.02
20.0000	.02	.02	.02	.02	.02
20.2500	.02	.02	.02	.02	.02
20.5000	.02	.02	.02	.02	.02
20.7500	.02	.02	.02	.02	.02
21.0000	.02	.02	.02	.02	.02
21.2500	.02	.02	.02	.02	.02
21.5000	.02	.02	.02	.02	.02
21.7500	.02	.02	.01	.01	.01
22.0000	.01	.01	.01	.01	.01
22.2500	.01	.01	.01	.01	.01
22.5000	.01	.01	.01	.01	.01
22.7500	.01	.01	.01	.01	.01
23.0000	.01	.01	.01	.01	.01
23.2500	.01	.01	.01	.01	.01
23.5000	.01	.01	.01	.01	.01
23.7500	.01	.01	.01	.01	.01
24.0000	.01	.01	.00		

SUMMARY FOR HYDROGRAPH ADDITION
at Node: DETENTION IN

HYG Directory: L:\1300'S\1327-MONTESSORI SCHOOL\ENGINEERING\PONDPACK\

Upstream Link ID	Upstream Node ID	HYG file	HYG ID	HYG tag
SPILLWAY 1	PRE-TREATMENTIN		SPILLWAY 1	100

INFLOWS TO: DETENTION IN

HYG file	HYG ID	HYG tag	Volume ac-ft	Peak Time hrs	Peak Flow cfs
	SPILLWAY 1	100	.213	11.9500	4.23

TOTAL FLOW INTO: DETENTION IN

HYG file	HYG ID	HYG tag	Volume ac-ft	Peak Time hrs	Peak Flow cfs
	DETENTION IN	100	.213	11.9500	4.23

```
TOTAL NODE INFLOW...
HYG file =
HYG ID   = DETENTION    IN
HYG Tag  =    100
----------------------------------
Peak Discharge =         4.23 cfs
Time to Peak   =      11.9500 hrs
HYG Volume     =         .213 ac-ft
----------------------------------
```

HYDROGRAPH ORDINATES (cfs)
Output Time increment = .0500 hrs
Time on left represents time for first value in each row.

Time hrs					
8.1500	.00	.02	.04	.03	.04
8.4000	.04	.04	.04	.05	.05
8.6500	.05	.05	.05	.05	.05
8.9000	.05	.06	.06	.06	.06
9.1500	.06	.06	.06	.06	.06
9.4000	.06	.06	.06	.06	.07
9.6500	.07	.07	.07	.07	.08
9.9000	.08	.08	.08	.09	.09
10.1500	.09	.10	.10	.10	.11
10.4000	.11	.12	.12	.12	.13
10.6500	.13	.14	.15	.15	.16
10.9000	.17	.17	.18	.19	.20
11.1500	.21	.22	.24	.25	.27
11.4000	.28	.30	.32	.41	.59
11.6500	.84	1.21	1.61	2.11	2.83
11.9000	3.84	4.23	3.80	2.54	1.45
12.1500	.75	.67	.52	.52	.44
12.4000	.43	.37	.35	.31	.29
12.6500	.27	.26	.25	.24	.23
12.9000	.22	.21	.21	.20	.19
13.1500	.19	.18	.18	.17	.17
13.4000	.16	.16	.15	.15	.14
13.6500	.14	.14	.13	.13	.13
13.9000	.12	.12	.12	.11	.11
14.1500	.11	.11	.11	.11	.10
14.4000	.10	.10	.10	.10	.10
14.6500	.10	.10	.10	.09	.09
14.9000	.09	.09	.09	.09	.09
15.1500	.09	.08	.08	.08	.08
15.4000	.08	.08	.08	.08	.08
15.6500	.07	.07	.07	.07	.07
15.9000	.07	.07	.07	.06	.06
16.1500	.06	.06	.06	.06	.06

HYDROGRAPH ORDINATES (cfs)
Output Time increment = .0500 hrs
Time on left represents time for first value in each row.

Time hrs					
16.4000	.06	.06	.06	.06	.06
16.6500	.06	.06	.06	.06	.06
16.9000	.06	.06	.06	.06	.06
17.1500	.05	.05	.05	.05	.05
17.4000	.05	.05	.05	.05	.05
17.6500	.05	.05	.05	.05	.05
17.9000	.05	.05	.05	.05	.05
18.1500	.05	.05	.05	.04	.04
18.4000	.04	.04	.04	.04	.04
18.6500	.04	.04	.04	.04	.04
18.9000	.04	.04	.04	.04	.04
19.1500	.04	.04	.04	.04	.04
19.4000	.04	.04	.03	.03	.03
19.6500	.03	.03	.03	.03	.03
19.9000	.03	.03	.03	.03	.03
20.1500	.03	.03	.03	.03	.03
20.4000	.03	.03	.03	.03	.03
20.6500	.03	.03	.03	.03	.03
20.9000	.03	.03	.03	.03	.03
21.1500	.03	.03	.03	.03	.03
21.4000	.03	.03	.03	.03	.03
21.6500	.03	.03	.03	.03	.03
21.9000	.03	.03	.03	.03	.03
22.1500	.03	.03	.03	.03	.03
22.4000	.03	.03	.03	.03	.03
22.6500	.03	.03	.03	.03	.03
22.9000	.03	.03	.02	.02	.02
23.1500	.02	.02	.02	.02	.02
23.4000	.02	.02	.02	.02	.02
23.6500	.02	.02	.02	.02	.02
23.9000	.02	.02	.02	.01	.00

LEVEL POOL ROUTING SUMMARY

```
HYG Dir          = L:\1300'S\1327-MONTESSORI SCHOOL\ENGINEERING\PONDPACK\
Inflow  HYG file = NONE STORED - DETENTION    IN  ..1
Outflow HYG file = NONE STORED - DETENTION    OUT ..1

Pond Node   Data = DETENTION
Pond Volume Data = DETENTION
Pond Outlet Data = DETENTION OUTLET

No Infiltration

INITIAL CONDITIONS
----------------------------------
Starting WS Elev   =    62.50 ft
Starting Volume    =     .000 ac-ft
Starting Outflow   =      .00 cfs
Starting Infiltr.  =      .00 cfs
Starting Total Qout=      .00 cfs
Time Increment     =    .0500 hrs


INFLOW/OUTFLOW HYDROGRAPH SUMMARY
=====================================================
Peak Inflow       =      1.11 cfs    at   11.9500 hrs
Peak Outflow      =       .48 cfs    at   12.1000 hrs
-----------------------------------------------------
Peak Elevation    =     63.62 ft
Peak Storage =           .019 ac-ft
=====================================================


MASS BALANCE (ac-ft)
--------------------------
+ Initial Vol  =        .000
+ HYG Vol IN   =        .039
- Infiltration =        .000
- HYG Vol OUT  =        .039
- Retained Vol =        .000
                  ----------
Unrouted Vol =       -.000 ac-ft  (.022% of Inflow Volume)
```

LEVEL POOL ROUTING SUMMARY

```
HYG Dir          = L:\1300'S\1327-MONTESSORI SCHOOL\ENGINEERING\PONDPACK\
Inflow  HYG file = NONE STORED - DETENTION    IN  ..2
Outflow HYG file = NONE STORED - DETENTION    OUT ..2

Pond Node   Data = DETENTION
Pond Volume Data = DETENTION
Pond Outlet Data = DETENTION OUTLET

No Infiltration

INITIAL CONDITIONS
----------------------------------
Starting WS Elev   =    62.50 ft
Starting Volume    =     .000 ac-ft
Starting Outflow   =      .00 cfs
Starting Infiltr.  =      .00 cfs
Starting Total Qout=      .00 cfs
Time Increment     =    .0500 hrs


INFLOW/OUTFLOW HYDROGRAPH SUMMARY
=====================================================
Peak Inflow       =      1.50 cfs    at   11.9500 hrs
Peak Outflow      =      1.66 cfs    at   12.0000 hrs
-----------------------------------------------------
Peak Elevation    =     63.68 ft
Peak Storage =           .021 ac-ft
=====================================================


MASS BALANCE (ac-ft)
--------------------------
+ Initial Vol  =        .000
+ HYG Vol IN   =        .060
- Infiltration =        .000
- HYG Vol OUT  =        .060
- Retained Vol =        .000
                   ----------
Unrouted Vol =       -.000 ac-ft  (.013% of Inflow Volume)
```

LEVEL POOL ROUTING SUMMARY

```
HYG Dir          = L:\1300'S\1327-MONTESSORI SCHOOL\ENGINEERING\PONDPACK\
Inflow  HYG file = NONE STORED - DETENTION    IN  .10
Outflow HYG file = NONE STORED - DETENTION    OUT .10

Pond Node   Data = DETENTION
Pond Volume Data = DETENTION
Pond Outlet Data = DETENTION OUTLET

No Infiltration

INITIAL CONDITIONS
----------------------------------
Starting WS Elev   =    62.50 ft
Starting Volume    =     .000 ac-ft
Starting Outflow   =      .00 cfs
Starting Infiltr.  =      .00 cfs
Starting Total Qout=      .00 cfs
Time Increment     =    .0500 hrs


INFLOW/OUTFLOW HYDROGRAPH SUMMARY
=====================================================
Peak Inflow       =      2.77 cfs    at   11.9500 hrs
Peak Outflow      =      2.86 cfs    at   11.9500 hrs
-----------------------------------------------------
Peak Elevation    =     63.72 ft
Peak Storage =           .022 ac-ft
=====================================================


MASS BALANCE (ac-ft)
--------------------------
+ Initial Vol  =        .000
+ HYG Vol IN   =        .136
- Infiltration =        .000
- HYG Vol OUT  =        .136
- Retained Vol =        .000
                  ----------
Unrouted Vol =       -.000 ac-ft  (.006% of Inflow Volume)
```

LEVEL POOL ROUTING SUMMARY

```
HYG Dir          = L:\1300'S\1327-MONTESSORI SCHOOL\ENGINEERING\PONDPACK\
Inflow  HYG file = NONE STORED - DETENTION    IN  100
Outflow HYG file = NONE STORED - DETENTION    OUT 100

Pond Node   Data = DETENTION
Pond Volume Data = DETENTION
Pond Outlet Data = DETENTION OUTLET

No Infiltration

INITIAL CONDITIONS
----------------------------------
Starting WS Elev   =    62.50 ft
Starting Volume    =     .000 ac-ft
Starting Outflow   =      .00 cfs
Starting Infiltr.  =      .00 cfs
Starting Total Qout=      .00 cfs
Time Increment     =    .0500 hrs


INFLOW/OUTFLOW HYDROGRAPH SUMMARY
=====================================================
Peak Inflow       =      4.23 cfs    at   11.9500 hrs
Peak Outflow      =      4.22 cfs    at   11.9500 hrs
-----------------------------------------------------
Peak Elevation    =     63.76 ft
Peak Storage =           .023 ac-ft
=====================================================


MASS BALANCE (ac-ft)
--------------------------
+ Initial Vol  =        .000
+ HYG Vol IN   =        .213
- Infiltration =        .000
- HYG Vol OUT  =        .213
- Retained Vol =        .000
                   ----------
Unrouted Vol =       -.000 ac-ft  (.004% of Inflow Volume)
```

LEVEL POOL ROUTING DATA

HYG Dir = L:\1300'S\1327-MONTESSORI SCHOOL\ENGINEERING\PONDPACK\
Inflow HYG file = NONE STORED - PRE-TREATMENTIN 100
Outflow HYG file = NONE STORED - PRE-TREATMENTOUT 100

Pond Node Data = PRE-TREATMENT
Pond Volume Data = PRE-TREATMENT
Pond Outlet Data = SPILLWAY 1
PRE-TREAT OUTLET

No Infiltration

INITIAL CONDITIONS

Starting WS Elev = 62.50 ft
Starting Volume = .000 ac-ft
Starting Outflow = .00 cfs
Starting Infiltr. = .00 cfs
Starting Total Qout= .00 cfs
Time Increment = .0500 hrs

Elevation ft	Outflow cfs	Storage ac-ft	Area acres	Infilt. cfs	Q Total cfs	2S/t + O cfs
62.50	.00	.000	.0013	.00	.00	.00
62.60	.00	.000	.0015	.00	.00	.07
62.70	.00	.000	.0017	.00	.00	.15
62.80	.00	.000	.0020	.00	.00	.24
62.90	.01	.001	.0022	.00	.01	.34
63.00	.01	.001	.0025	.00	.01	.46
63.10	.01	.001	.0028	.00	.01	.59
63.20	.01	.001	.0031	.00	.01	.73
63.30	.01	.002	.0034	.00	.01	.89
63.40	.01	.002	.0037	.00	.01	1.06
63.50	.01	.003	.0041	.00	.01	1.25
63.60	.01	.003	.0044	.00	.01	1.46
63.70	.01	.003	.0048	.00	.01	1.69
63.80	.01	.004	.0052	.00	.01	1.93
63.90	.01	.004	.0056	.00	.01	2.19
64.00	.01	.005	.0060	.00	.01	2.47
64.10	.01	.006	.0064	.00	.01	2.77
64.20	.01	.006	.0068	.00	.01	3.09
64.30	1.86	.007	.0070	.00	1.86	5.27
64.40	5.23	.008	.0073	.00	5.23	8.99
64.50	9.60	.008	.0075	.00	9.60	13.71

SUMMARY FOR HYDROGRAPH ADDITION
at Node: PRE-TREATMENTIN

HYG Directory: L:\1300'S\1327-MONTESSORI SCHOOL\ENGINEERING\PONDPACK\

Upstream Link ID	Upstream Node ID	HYG file	HYG ID	HYG tag
A 40	DA1 POST		DA1 POST	..1

INFLOWS TO: PRE-TREATMENTIN

HYG file	HYG ID	HYG tag	Volume ac-ft	Peak Time hrs	Peak Flow cfs
	DA1 POST	..1	.062	11.9500	1.10

TOTAL FLOW INTO: PRE-TREATMENTIN

HYG file	HYG ID	HYG tag	Volume ac-ft	Peak Time hrs	Peak Flow cfs
	PRE-TREATMENTIN	..1	.062	11.9500	1.10

TOTAL NODE INFLOW...
HYG file =
HYG ID = PRE-TREATMENTIN
HYG Tag = ..1

Peak Discharge = 1.10 cfs
Time to Peak = 11.9500 hrs
HYG Volume = .062 ac-ft

HYDROGRAPH ORDINATES (cfs)
Output Time increment = .0500 hrs
Time on left represents time for first value in each row.

Time hrs					
7.0000	.00	.00	.00	.00	.00
7.2500	.00	.00	.00	.00	.00
7.5000	.00	.00	.00	.00	.00
7.7500	.00	.00	.00	.00	.00
8.0000	.00	.00	.00	.00	.00
8.2500	.00	.00	.00	.00	.01
8.5000	.01	.01	.01	.01	.01
8.7500	.01	.01	.01	.01	.01
9.0000	.01	.01	.01	.01	.01
9.2500	.01	.01	.01	.01	.01
9.5000	.01	.01	.01	.01	.01
9.7500	.01	.01	.01	.01	.01
10.0000	.01	.02	.02	.02	.02
10.2500	.02	.02	.02	.02	.02
10.5000	.02	.02	.02	.03	.03
10.7500	.03	.03	.03	.03	.03
11.0000	.04	.04	.04	.04	.05
11.2500	.05	.05	.06	.06	.06
11.5000	.07	.09	.13	.20	.29
11.7500	.39	.53	.74	1.05	1.10
12.0000	.98	.75	.38	.24	.19
12.2500	.17	.15	.14	.13	.12
12.5000	.11	.10	.09	.09	.08
12.7500	.08	.08	.07	.07	.07
13.0000	.07	.06	.06	.06	.06
13.2500	.06	.06	.06	.05	.05
13.5000	.05	.05	.05	.05	.05
13.7500	.05	.04	.04	.04	.04
14.0000	.04	.04	.04	.04	.04
14.2500	.04	.04	.04	.04	.04
14.5000	.04	.04	.03	.03	.03
14.7500	.03	.03	.03	.03	.03
15.0000	.03	.03	.03	.03	.03

HYDROGRAPH ORDINATES (cfs)
Output Time increment = .0500 hrs
Time on left represents time for first value in each row.

Time hrs					
15.2500	.03	.03	.03	.03	.03
15.5000	.03	.03	.03	.03	.03
15.7500	.03	.03	.03	.03	.03
16.0000	.02	.02	.02	.02	.02
16.2500	.02	.02	.02	.02	.02
16.5000	.02	.02	.02	.02	.02
16.7500	.02	.02	.02	.02	.02
17.0000	.02	.02	.02	.02	.02
17.2500	.02	.02	.02	.02	.02
17.5000	.02	.02	.02	.02	.02
17.7500	.02	.02	.02	.02	.02
18.0000	.02	.02	.02	.02	.02
18.2500	.02	.02	.02	.02	.02
18.5000	.02	.02	.02	.02	.02
18.7500	.02	.02	.02	.02	.02
19.0000	.02	.02	.02	.02	.02
19.2500	.02	.02	.02	.02	.02
19.5000	.02	.02	.02	.02	.02
19.7500	.01	.01	.01	.01	.01
20.0000	.01	.01	.01	.01	.01
20.2500	.01	.01	.01	.01	.01
20.5000	.01	.01	.01	.01	.01
20.7500	.01	.01	.01	.01	.01
21.0000	.01	.01	.01	.01	.01
21.2500	.01	.01	.01	.01	.01
21.5000	.01	.01	.01	.01	.01
21.7500	.01	.01	.01	.01	.01
22.0000	.01	.01	.01	.01	.01
22.2500	.01	.01	.01	.01	.01
22.5000	.01	.01	.01	.01	.01
22.7500	.01	.01	.01	.01	.01
23.0000	.01	.01	.01	.01	.01
23.2500	.01	.01	.01	.01	.01
23.5000	.01	.01	.01	.01	.01
23.7500	.01	.01	.01	.01	.01
24.0000	.01	.01	.00	.00	

62.50	.00	.00	.00
62.60	.00	.00	.00
62.70	.00	.00	.00
62.80	.00	.00	.00
62.90	.00	.01	.01
63.00	.00	.01	.01
63.10	.00	.01	.01
63.20	.00	.01	.01
63.30	.00	.01	.01
63.40	.00	.01	.01
63.50	.00	.01	.01
63.60	.00	.01	.01
63.70	.00	.01	.01
63.80	.00	.01	.01
63.90	.00	.01	.01
64.00	.00	.01	.01
64.10	.00	.01	.01
64.20	.00	.01	.01
64.30	1.84	.01	1.86
64.40	5.22	.02	5.23
64.50	9.58	.02	9.60

SUMMARY FOR HYDROGRAPH ADDITION
at Node: PRE-TREATMENTIN

HYG Directory: L:\1300'S\1327-MONTESSORI SCHOOL\ENGINEERING\PONDPACK\

Upstream Link ID	Upstream Node ID	HYG file	HYG ID	HYG tag
A 40	DA1 POST		DA1 POST	..2

INFLOWS TO: PRE-TREATMENTIN

HYG file	HYG ID	HYG tag	Volume ac-ft	Peak Time hrs	Peak Flow cfs
	DA1 POST	..2	.085	11.9500	1.49

TOTAL FLOW INTO: PRE-TREATMENTIN

HYG file	HYG ID	HYG tag	Volume ac-ft	Peak Time hrs	Peak Flow cfs
	PRE-TREATMENTIN	..2	.085	11.9500	1.49

```
TOTAL NODE INFLOW...
HYG file =
HYG ID   = PRE-TREATMENTIN
HYG Tag  =    ..2
----------------------------------
Peak Discharge =         1.49 cfs
Time to Peak   =      11.9500 hrs
HYG Volume     =         .085 ac-ft
----------------------------------
```

HYDROGRAPH ORDINATES (cfs)
Output Time increment = .0500 hrs
Time on left represents time for first value in each row.

Time hrs					
5.9000	.00	.00	.00	.00	.00
6.1500	.00	.00	.00	.00	.00
6.4000	.00	.00	.00	.00	.00
6.6500	.00	.00	.00	.00	.00
6.9000	.00	.00	.00	.00	.00
7.1500	.00	.00	.00	.01	.01
7.4000	.01	.01	.01	.01	.01
7.6500	.01	.01	.01	.01	.01
7.9000	.01	.01	.01	.01	.01
8.1500	.01	.01	.01	.01	.01
8.4000	.01	.01	.01	.01	.01
8.6500	.01	.01	.01	.01	.01
8.9000	.01	.01	.02	.02	.02
9.1500	.02	.02	.02	.02	.02
9.4000	.02	.02	.02	.02	.02
9.6500	.02	.02	.02	.02	.02
9.9000	.02	.02	.02	.03	.03
10.1500	.03	.03	.03	.03	.03
10.4000	.03	.03	.04	.04	.04
10.6500	.04	.04	.04	.05	.05
10.9000	.05	.05	.05	.06	.06
11.1500	.07	.07	.07	.08	.09
11.4000	.09	.10	.10	.14	.20
11.6500	.28	.41	.56	.74	1.02
11.9000	1.44	1.49	1.32	1.00	.50
12.1500	.32	.25	.22	.20	.19
12.4000	.17	.16	.14	.13	.12
12.6500	.11	.11	.11	.10	.10
12.9000	.09	.09	.09	.08	.08
13.1500	.08	.08	.08	.07	.07
13.4000	.07	.07	.07	.07	.06
13.6500	.06	.06	.06	.06	.06
13.9000	.06	.05	.05	.05	.05

HYDROGRAPH ORDINATES (cfs)
Output Time increment = .0500 hrs
Time on left represents time for first value in each row.

Time hrs					
14.1500	.05	.05	.05	.05	.05
14.4000	.05	.05	.05	.05	.05
14.6500	.05	.04	.04	.04	.04
14.9000	.04	.04	.04	.04	.04
15.1500	.04	.04	.04	.04	.04
15.4000	.04	.04	.04	.04	.04
15.6500	.04	.04	.03	.03	.03
15.9000	.03	.03	.03	.03	.03
16.1500	.03	.03	.03	.03	.03
16.4000	.03	.03	.03	.03	.03
16.6500	.03	.03	.03	.03	.03
16.9000	.03	.03	.03	.03	.03
17.1500	.03	.03	.03	.03	.03
17.4000	.03	.03	.03	.03	.03
17.6500	.03	.03	.03	.03	.03
17.9000	.03	.03	.03	.03	.02
18.1500	.02	.02	.02	.02	.02
18.4000	.02	.02	.02	.02	.02
18.6500	.02	.02	.02	.02	.02
18.9000	.02	.02	.02	.02	.02
19.1500	.02	.02	.02	.02	.02
19.4000	.02	.02	.02	.02	.02
19.6500	.02	.02	.02	.02	.02
19.9000	.02	.02	.02	.02	.02
20.1500	.02	.02	.02	.02	.02
20.4000	.02	.02	.02	.02	.02
20.6500	.02	.02	.02	.02	.02
20.9000	.02	.02	.02	.02	.02
21.1500	.02	.02	.02	.02	.02
21.4000	.02	.02	.02	.02	.02
21.6500	.02	.02	.02	.02	.02
21.9000	.02	.02	.02	.02	.02
22.1500	.02	.02	.02	.02	.02
22.4000	.02	.02	.02	.02	.02
22.6500	.02	.02	.02	.02	.02
22.9000	.02	.02	.02	.02	.02
23.1500	.02	.02	.02	.02	.02
23.4000	.02	.02	.02	.02	.02
23.6500	.02	.02	.02	.02	.02
23.9000	.02	.02	.02	.01	.00
24.1500	.00	.00			

62.50	.00	.00	.00
62.60	.00	.00	.00
62.70	.00	.00	.00
62.80	.00	.00	.00
62.90	.00	.01	.01
63.00	.00	.01	.01
63.10	.00	.01	.01
63.20	.00	.01	.01
63.30	.00	.01	.01
63.40	.00	.01	.01
63.50	.00	.01	.01
63.60	.00	.01	.01
63.70	.00	.01	.01
63.80	.00	.01	.01
63.90	.00	.01	.01
64.00	.00	.01	.01
64.10	.00	.01	.01
64.20	.00	.01	.01
64.30	1.84	.01	1.86
64.40	5.22	.02	5.23
64.50	9.58	.02	9.60

SUMMARY FOR HYDROGRAPH ADDITION
at Node: PRE-TREATMENTIN

HYG Directory: L:\1300'S\1327-MONTESSORI SCHOOL\ENGINEERING\PONDPACK\

Upstream Link ID	Upstream Node ID	HYG file	HYG ID	HYG tag
A 40	DA1 POST		DA1 POST	.10

INFLOWS TO: PRE-TREATMENTIN

HYG file	HYG ID	HYG tag	Volume ac-ft	Peak Time hrs	Peak Flow cfs
	DA1 POST	.10	.163	11.9500	2.77

TOTAL FLOW INTO: PRE-TREATMENTIN

HYG file	HYG ID	HYG tag	Volume ac-ft	Peak Time hrs	Peak Flow cfs
	PRE-TREATMENTIN	.10	.163	11.9500	2.77

TOTAL NODE INFLOW...
HYG file =
HYG ID = PRE-TREATMENTIN
HYG Tag = .10

Peak Discharge = 2.77 cfs
Time to Peak = 11.9500 hrs
HYG Volume = .163 ac-ft

HYDROGRAPH ORDINATES (cfs)
Output Time increment = .0500 hrs
Time on left represents time for first value in each row.

Time hrs					
3.9000	.00	.00	.00	.00	.00
4.1500	.00	.00	.00	.00	.00
4.4000	.00	.00	.00	.00	.00
4.6500	.00	.00	.00	.01	.01
4.9000	.01	.01	.01	.01	.01
5.1500	.01	.01	.01	.01	.01
5.4000	.01	.01	.01	.01	.01
5.6500	.01	.01	.01	.01	.01
5.9000	.01	.01	.01	.01	.01
6.1500	.01	.01	.01	.01	.01
6.4000	.01	.01	.02	.02	.02
6.6500	.02	.02	.02	.02	.02
6.9000	.02	.02	.02	.02	.02
7.1500	.02	.02	.02	.02	.02
7.4000	.02	.02	.02	.02	.02
7.6500	.02	.02	.02	.02	.02
7.9000	.02	.02	.03	.03	.03
8.1500	.03	.03	.03	.03	.03
8.4000	.03	.03	.03	.03	.03
8.6500	.04	.04	.04	.04	.04
8.9000	.04	.04	.04	.04	.04
9.1500	.04	.05	.05	.05	.05
9.4000	.05	.05	.05	.05	.05
9.6500	.05	.05	.05	.05	.06
9.9000	.06	.06	.06	.06	.07
10.1500	.07	.07	.07	.07	.08
10.4000	.08	.08	.08	.09	.09
10.6500	.09	.10	.10	.11	.11
10.9000	.12	.12	.12	.13	.14
11.1500	.15	.16	.16	.18	.19
11.4000	.20	.21	.22	.29	.41
11.6500	.59	.85	1.12	1.47	1.98
11.9000	2.71	2.77	2.42	1.81	.91

HYDROGRAPH ORDINATES (cfs)
Output Time increment = .0500 hrs
Time on left represents time for first value in each row.

Time hrs					
12.1500	.57	.44	.39	.36	.33
12.4000	.30	.28	.25	.23	.21
12.6500	.20	.19	.19	.18	.17
12.9000	.17	.16	.16	.15	.15
13.1500	.14	.14	.13	.13	.13
13.4000	.12	.12	.12	.12	.11
13.6500	.11	.11	.10	.10	.10
13.9000	.10	.10	.09	.09	.09
14.1500	.09	.09	.09	.09	.08
14.4000	.08	.08	.08	.08	.08
14.6500	.08	.08	.08	.08	.08
14.9000	.08	.07	.07	.07	.07
15.1500	.07	.07	.07	.07	.07
15.4000	.07	.07	.07	.06	.06
15.6500	.06	.06	.06	.06	.06
15.9000	.06	.06	.06	.06	.06
16.1500	.06	.05	.05	.05	.05
16.4000	.05	.05	.05	.05	.05
16.6500	.05	.05	.05	.05	.05
16.9000	.05	.05	.05	.05	.05
17.1500	.05	.05	.05	.05	.05
17.4000	.05	.05	.05	.05	.05
17.6500	.05	.05	.05	.05	.05
17.9000	.04	.04	.04	.04	.04
18.1500	.04	.04	.04	.04	.04
18.4000	.04	.04	.04	.04	.04
18.6500	.04	.04	.04	.04	.04
18.9000	.04	.04	.04	.04	.04
19.1500	.04	.04	.04	.04	.04
19.4000	.04	.04	.04	.03	.03
19.6500	.03	.03	.03	.03	.03
19.9000	.03	.03	.03	.03	.03
20.1500	.03	.03	.03	.03	.03
20.4000	.03	.03	.03	.03	.03
20.6500	.03	.03	.03	.03	.03
20.9000	.03	.03	.03	.03	.03
21.1500	.03	.03	.03	.03	.03
21.4000	.03	.03	.03	.03	.03
21.6500	.03	.03	.03	.03	.03
21.9000	.03	.03	.03	.03	.03
22.1500	.03	.03	.03	.03	.03
22.4000	.03	.03	.03	.03	.03
22.6500	.03	.03	.03	.03	.03
22.9000	.03	.03	.03	.03	.03
23.1500	.03	.03	.03	.03	.03
23.4000	.03	.03	.03	.03	.03
23.6500	.03	.03	.03	.03	.03

HYDROGRAPH ORDINATES (cfs)
Output Time increment = .0500 hrs
Time on left represents time for first value in each row.

Time hrs					
23.9000	.03	.03	.03	.02	.01
24.1500	.00	.00			

62.50	.00	.00	.00
62.60	.00	.00	.00
62.70	.00	.00	.00
62.80	.00	.00	.00
62.90	.00	.01	.01
63.00	.00	.01	.01
63.10	.00	.01	.01
63.20	.00	.01	.01
63.30	.00	.01	.01
63.40	.00	.01	.01
63.50	.00	.01	.01
63.60	.00	.01	.01
63.70	.00	.01	.01
63.80	.00	.01	.01
63.90	.00	.01	.01
64.00	.00	.01	.01
64.10	.00	.01	.01
64.20	.00	.01	.01
64.30	1.84	.01	1.86
64.40	5.22	.02	5.23
64.50	9.58	.02	9.60

SUMMARY FOR HYDROGRAPH ADDITION
at Node: PRE-TREATMENTIN

HYG Directory: L:\1300'S\1327-MONTESSORI SCHOOL\ENGINEERING\PONDPACK\

Upstream Link ID	Upstream Node ID	HYG file	HYG ID	HYG tag
A 40	DA1 POST		DA1 POST	100

INFLOWS TO: PRE-TREATMENTIN

HYG file	HYG ID	HYG tag	Volume ac-ft	Peak Time hrs	Peak Flow cfs
	DA1 POST	100	.240	11.9500	3.98

TOTAL FLOW INTO: PRE-TREATMENTIN

HYG file	HYG ID	HYG tag	Volume ac-ft	Peak Time hrs	Peak Flow cfs
	PRE-TREATMENTIN	100	.240	11.9500	3.98

TOTAL NODE INFLOW...
HYG file =
HYG ID = PRE-TREATMENTIN
HYG Tag = 100

Peak Discharge = 3.98 cfs
Time to Peak = 11.9500 hrs
HYG Volume = .240 ac-ft

HYDROGRAPH ORDINATES (cfs)
Output Time increment = .0500 hrs
Time on left represents time for first value in each row.

Time hrs					
2.9000	.00	.00	.00	.00	.00
3.1500	.00	.00	.00	.00	.00
3.4000	.00	.00	.01	.01	.01
3.6500	.01	.01	.01	.01	.01
3.9000	.01	.01	.01	.01	.01
4.1500	.01	.01	.01	.01	.01
4.4000	.01	.01	.01	.01	.01
4.6500	.01	.01	.01	.02	.02
4.9000	.02	.02	.02	.02	.02
5.1500	.02	.02	.02	.02	.02
5.4000	.02	.02	.02	.02	.02
5.6500	.02	.02	.02	.02	.02
5.9000	.02	.03	.03	.03	.03
6.1500	.03	.03	.03	.03	.03
6.4000	.03	.03	.03	.03	.03
6.6500	.03	.03	.03	.03	.03
6.9000	.03	.03	.04	.04	.04
7.1500	.04	.04	.04	.04	.04
7.4000	.04	.04	.04	.04	.04
7.6500	.04	.04	.04	.04	.04
7.9000	.04	.04	.04	.05	.05
8.1500	.05	.05	.05	.05	.05
8.4000	.05	.06	.06	.06	.06
8.6500	.06	.06	.06	.07	.07
8.9000	.07	.07	.07	.07	.07
9.1500	.08	.08	.08	.08	.08
9.4000	.08	.08	.08	.08	.08
9.6500	.08	.08	.09	.09	.09
9.9000	.09	.10	.10	.10	.11
10.1500	.11	.11	.12	.12	.12
10.4000	.13	.13	.13	.14	.14
10.6500	.15	.16	.16	.17	.17
10.9000	.18	.19	.19	.20	.21

HYDROGRAPH ORDINATES (cfs)
Output Time increment = .0500 hrs
Time on left represents time for first value in each row.

Time hrs					
11.1500	.22	.24	.25	.27	.28
11.4000	.30	.32	.33	.44	.62
11.6500	.88	1.27	1.66	2.16	2.88
11.9000	3.92	3.98	3.45	2.58	1.30
12.1500	.81	.63	.56	.51	.47
12.4000	.43	.39	.35	.32	.30
12.6500	.28	.27	.26	.25	.25
12.9000	.24	.23	.22	.21	.20
13.1500	.20	.19	.19	.18	.18
13.4000	.18	.17	.17	.16	.16
13.6500	.15	.15	.15	.14	.14
13.9000	.14	.13	.13	.13	.13
14.1500	.12	.12	.12	.12	.12
14.4000	.12	.12	.12	.11	.11
14.6500	.11	.11	.11	.11	.11
14.9000	.11	.10	.10	.10	.10
15.1500	.10	.10	.10	.10	.10
15.4000	.09	.09	.09	.09	.09
15.6500	.09	.09	.09	.08	.08
15.9000	.08	.08	.08	.08	.08
16.1500	.08	.08	.08	.08	.08
16.4000	.08	.07	.07	.07	.07
16.6500	.07	.07	.07	.07	.07
16.9000	.07	.07	.07	.07	.07
17.1500	.07	.07	.07	.07	.07
17.4000	.07	.07	.07	.07	.07
17.6500	.06	.06	.06	.06	.06
17.9000	.06	.06	.06	.06	.06
18.1500	.06	.06	.06	.06	.06
18.4000	.06	.06	.06	.06	.06
18.6500	.06	.06	.06	.06	.05
18.9000	.05	.05	.05	.05	.05
19.1500	.05	.05	.05	.05	.05
19.4000	.05	.05	.05	.05	.05
19.6500	.05	.05	.05	.05	.05
19.9000	.05	.05	.04	.04	.04
20.1500	.04	.04	.04	.04	.04
20.4000	.04	.04	.04	.04	.04
20.6500	.04	.04	.04	.04	.04
20.9000	.04	.04	.04	.04	.04
21.1500	.04	.04	.04	.04	.04
21.4000	.04	.04	.04	.04	.04
21.6500	.04	.04	.04	.04	.04
21.9000	.04	.04	.04	.04	.04
22.1500	.04	.04	.04	.04	.04
22.4000	.04	.04	.04	.04	.04
22.6500	.04	.04	.04	.04	.04

HYDROGRAPH ORDINATES (cfs)
Output Time increment = .0500 hrs
Time on left represents time for first value in each row.

Time hrs					
22.9000	.04	.04	.04	.04	.04
23.1500	.04	.04	.04	.04	.04
23.4000	.04	.04	.04	.04	.04
23.6500	.04	.04	.04	.04	.04
23.9000	.04	.04	.04	.03	.01
24.1500	.00	.00			

LEVEL POOL ROUTING SUMMARY

```
HYG Dir          = L:\1300'S\1327-MONTESSORI SCHOOL\ENGINEERING\PONDPACK\
Inflow  HYG file = NONE STORED - PRE-TREATMENTIN  ..1
Outflow HYG file = NONE STORED - PRE-TREATMENTOUT ..1

Pond Node   Data = PRE-TREATMENT
Pond Volume Data = PRE-TREATMENT
Pond Outlet Data = SPILLWAY 1
                   PRE-TREAT OUTLET

No Infiltration

INITIAL CONDITIONS
----------------------------------
Starting WS Elev   =    62.50 ft
Starting Volume    =     .000 ac-ft
Starting Outflow   =      .00 cfs
Starting Infiltr.  =      .00 cfs
Starting Total Qout=      .00 cfs
Time Increment     =    .0500 hrs


INFLOW/OUTFLOW HYDROGRAPH SUMMARY
=====================================================
Peak Inflow       =      1.10 cfs    at   11.9500 hrs
Peak Outflow      =      1.13 cfs    at   11.9500 hrs
-----------------------------------------------------
Peak Elevation    =     64.26 ft
Peak Storage =           .007 ac-ft
=====================================================


MASS BALANCE (ac-ft)
--------------------------
+ Initial Vol  =        .000
+ HYG Vol IN   =        .062
- Infiltration =        .000
- HYG Vol OUT  =        .061
- Retained Vol =        .001
                  ----------
Unrouted Vol =       -.000 ac-ft  (.005% of Inflow Volume)
```

LEVEL POOL ROUTING SUMMARY

```
HYG Dir          = L:\1300'S\1327-MONTESSORI SCHOOL\ENGINEERING\PONDPACK\
Inflow  HYG file = NONE STORED - PRE-TREATMENTIN  ..2
Outflow HYG file = NONE STORED - PRE-TREATMENTOUT ..2

Pond Node   Data = PRE-TREATMENT
Pond Volume Data = PRE-TREATMENT
Pond Outlet Data = SPILLWAY 1
                   PRE-TREAT OUTLET

No Infiltration

INITIAL CONDITIONS
---------------------------------
Starting WS Elev   =    62.50 ft
Starting Volume    =     .000 ac-ft
Starting Outflow   =      .00 cfs
Starting Infiltr.  =      .00 cfs
Starting Total Qout=      .00 cfs
Time Increment     =    .0500 hrs


INFLOW/OUTFLOW HYDROGRAPH SUMMARY
=====================================================
Peak Inflow       =      1.49 cfs    at   11.9500 hrs
Peak Outflow      =      1.51 cfs    at   11.9500 hrs
-----------------------------------------------------
Peak Elevation    =     64.28 ft
Peak Storage =           .007 ac-ft
=====================================================


MASS BALANCE (ac-ft)
--------------------------
+ Initial Vol  =        .000
+ HYG Vol IN   =        .085
- Infiltration =        .000
- HYG Vol OUT  =        .084
- Retained Vol =        .001
                 ----------
Unrouted Vol =       -.000 ac-ft  (.004% of Inflow Volume)
```

LEVEL POOL ROUTING SUMMARY

```
HYG Dir          = L:\1300'S\1327-MONTESSORI SCHOOL\ENGINEERING\PONDPACK\
Inflow  HYG file = NONE STORED - PRE-TREATMENTIN  .10
Outflow HYG file = NONE STORED - PRE-TREATMENTOUT .10

Pond Node   Data = PRE-TREATMENT
Pond Volume Data = PRE-TREATMENT
Pond Outlet Data = SPILLWAY 1
                   PRE-TREAT OUTLET

No Infiltration

INITIAL CONDITIONS
---------------------------------
Starting WS Elev   =    62.50 ft
Starting Volume    =     .000 ac-ft
Starting Outflow   =      .00 cfs
Starting Infiltr.  =      .00 cfs
Starting Total Qout=      .00 cfs
Time Increment     =    .0500 hrs


INFLOW/OUTFLOW HYDROGRAPH SUMMARY
=====================================================
Peak Inflow       =      2.77 cfs    at   11.9500 hrs
Peak Outflow      =      2.79 cfs    at   11.9500 hrs
-----------------------------------------------------
Peak Elevation    =     64.33 ft
Peak Storage =           .007 ac-ft
=====================================================


MASS BALANCE (ac-ft)
--------------------------
+ Initial Vol  =        .000
+ HYG Vol IN   =        .163
- Infiltration =        .000
- HYG Vol OUT  =        .163
- Retained Vol =        .001
                 ----------
Unrouted Vol =       -.000 ac-ft  (.002% of Inflow Volume)
```

LEVEL POOL ROUTING SUMMARY

```
HYG Dir          = L:\1300'S\1327-MONTESSORI SCHOOL\ENGINEERING\PONDPACK\
Inflow  HYG file = NONE STORED - PRE-TREATMENTIN  100
Outflow HYG file = NONE STORED - PRE-TREATMENTOUT 100

Pond Node   Data = PRE-TREATMENT
Pond Volume Data = PRE-TREATMENT
Pond Outlet Data = SPILLWAY 1
                   PRE-TREAT OUTLET

No Infiltration

INITIAL CONDITIONS
----------------------------------
Starting WS Elev   =    62.50 ft
Starting Volume    =     .000 ac-ft
Starting Outflow   =      .00 cfs
Starting Infiltr.  =      .00 cfs
Starting Total Qout=      .00 cfs
Time Increment     =    .0500 hrs


INFLOW/OUTFLOW HYDROGRAPH SUMMARY
=====================================================
Peak Inflow       =      3.98 cfs    at   11.9500 hrs
Peak Outflow      =      3.95 cfs    at   11.9500 hrs
-----------------------------------------------------
Peak Elevation    =     64.37 ft
Peak Storage =           .008 ac-ft
=====================================================


MASS BALANCE (ac-ft)
--------------------------
+ Initial Vol  =        .000
+ HYG Vol IN   =        .240
- Infiltration =        .000
- HYG Vol OUT  =        .240
- Retained Vol =        .001
                 ----------
Unrouted Vol =       -.000 ac-ft  (.001% of Inflow Volume)
```

ENVIRONMENTAL DIVISION REVIEW COMMENTS
Williamsburg Montessori School
SP-26-01
April 16, 2001 MDW/DEC

General:

1. A Land Disturbing Permit and Siltation Agreement, with surety, are required for this project.

2. An Inspection/Maintenance Agreement shall be executed with the county for the BMP facility for this project.

3. Record Drawing and Construction Certification. The stormwater management/BMP facility as proposed for this project will require submission, review and approval of a record drawing (as-built) and construction certification prior to release of the posted bond/surety. Provide notes on the plan accordingly to ensure this activity is adequately coordinated and performed during and following construction in accordance with current County guidelines.

4. Site Tabulation. Provide a title sheet with the following information as a minimum: vicinitymap, site statistics, sheet index, owner, flood zone and any general notes.
disturbed area & total area.

Chesapeake Bay Preservation:

5. Environmental Inventory. Provide an environmental inventory in accordance with Section 23-10(2) of the Chesapeake Bay Preservation ordinance. Components include tidal wetlands, tidal shores, non-tidal wetlands in RPA, resource protection areas, non-tidal wetlands in RMA, hydric soils and slopes 25 percent or greater. If no components are present onsite, state that in a note.

Erosion & Sediment Control Plan:

6. Design Checklist. Please provide a standard James City County Erosion and Sediment Control and Stormwater Management Design Plan Checklist. This will ensure a thorough plan submission.

7. Standard E&SC Notes. Replace the Erosion Control Notes on C5 with revised James City County Erosion Control Notes dated 5/5/99. Contact the Environmental Division at 757-253-6702 if you need a current copy of the standard notes.

8. Existing Drainage. The existing receiving channel for the BMP needs to be regraded to ensure that positive drainage is provided to the roadside ditch along Longhill Road. Recommend that a minimum 0.5% slope be provided or as necessary to carry the 10-year storm discharge.

9. Temporary Stockpile Areas. Show any temporary soil stockpile, staging and equipment storage areas (with required erosion and sediment controls) or indicate on the plans that none are anticipated for the project site.

10. Offsite Land Disturbing Areas. Identify any offsite land disturbing areas including borrow, waste, or disposal sites (with required erosion and sediment controls) or indicate on the plans that none are anticipated for this project.

11. Limits of Work. Show and label a distinct limit of work, clearing and grading around the site periphery. Include the sewer extension to the rear of the building.

12. Sequence of Construction. Step 10. Inflow velocities should be known, specify which type of channel lining is to be installed.

13. Sequence of Construction. Step 11. The site must be stabilized prior to removal of erosion and

sediment control measures. Positive drainage must be established prior to final stabilization.

14. Sequence of Construction. It is stated that the basin may be partially excavated in step 2 but that silt fencing does not need to be installed until step 5. Resolve this conflict.

15. Rock Construction Entrance. Provide a rock construction entrance at the entrance to the project in accordance with VESCH Minimum Standard 3.02.

16. Outlet Protection. Provide the appropriate outlet protection for the pipe outfall from the BMP. Specify stone class and thickness, pad dimensions and amount of stone to be used in accordance with requirements of the VESCH, Minimum Standards 3.18 and 3.19.

Stormwater Management / Drainage:

17. Drainage. Provide the property limits on the plan so it can be determined if a drainage easement is required for the existing channel that receives the BMP discharge.

18. BMP Design/Water Quality Points. The standard Worksheet for BMP Point System as provided shows the site stormwater management plan achieves a total of 10.3 points based on use of a Bioretention facility, (County type D-1 BMP, 8 points) in combination with natural open space. Provide additional calculations and information to verify that the design meets the County's water quality design criteria as follows:
A. The six-inch ponding area over the surface of the BMP needs to hold the water quality volume. It currently is undersized at 697 square feet for the 1400 cu ft required. As the basin has an underdrain, the depth of ponding can be increased to 1.0 foot in accordance with the state SWM Handbook.
B. Specify the dimensions of the gravel diaphragm area to be used as pretreatment and show its location on the plan. Specify the type of stone to be used for this purpose. Remove the designation of "optional" on the detail on sheet C6.
C. If the ponding area sizing requirement increases the surface area of the BMP, the number of plants may need to be increased.
D. Provide the soil testing results in accordance with the Initial Feasibility Testing portion of Appendix E of the Guidelines.
E. Provide additional detail regarding the release structure from the detention basin similar to the sand filter design cross-section.
F. As there are several comments that could require redesign of the basin, additional comments may be generated during the next review.

19. Stream Channel Protection. Include provisions in the design of the BMP to ensure compliance with current stream channel protection criteria downstream (below) the BMP facility. Current stream channel protection criteria for James City County requires 24-hour extended detention of the runoff from the 1-year frequency storm (post-developed) instead of reduction of the 2-year peak rate as previously required by MS-19 of the Virginia Erosion and Sediment Control regulations. The SCS Type II, 24-hour storm duration rainfall depth for the 1-year storm event in James City County is 2.8 inches.

20. Open Space Credit. Natural Open Space areas as claimed in the standard BMP worksheet must be placed in conservation easements. Therefore, provide conservation easements for the 56.7% of the site claimed in the BMP worksheet. Criteria for eligibility of areas to be credited as natural open space include only those areas of open space where the landscape material will not be actively maintained and the minimum width for the conservation easements is 35 feet.

21. Drainage Map. Provide a drainage map showing existing and/or proposed drainage subareas with divides for all stormwater drainage facilities, the BMP and special points of analyses. Include the size of each drainage area as well as applicable runoff coefficients and times of concentration.

22. Hydrology/Hydraulics Information. Provide all calculations including stage-storage data to verify the design of the basin from a water quantity standpoint. Stream channel protection criteria as well as the 10 and 100-year storms must be routed through the basin to ensure adequate control.

23. Emergency Spillway. No emergency spillway was provided. For detention/retention facilities, the County recommends use of a combined principal and emergency spillway to achieve a minimum of 1 foot of freeboard from the 100-year design water surface elevation to the top of the facility.

24. Plastic Risers. In general, plastic risers are not recommended in facilities that will function during winter months due to the potential for ultraviolet degradation, cracking during freeze-thaw cycles and buoyancy tendencies.

25. Maintenance Plan. Provide a maintenance plan for the stormwater management/BMP facility. Section 23-10(4) of the Chesapeake Bay Preservation Ordinance requires stormwater management plans to include a long-term schedule for inspection and maintenance of stormwater management/BMP facilities. The plan should be specific for a D-1 Bioretention facility and be provided on the plan.

26. BMP WSEL's. Show the 100-year design water surface elevations on the BMP plan and detail.

27. Stormwater Conveyance Channel. Provide calculations to support the design flow used to design the drainage channel at the end of the curb and gutter section that leads to the BMP.

28. PVC Storm Drains. Show type and class of PVC pipe required for onsite storm drains (ie. Schedule 40, ASTM D3034, etc.)

29. Overflow Path. Show the general anticipated overflow path should the system fail or become clogged or if the design storm is exceeded. The path should be a safe escape route that will not impact downstream property or structures.

30. Stormwater Management Plan. For water quality, stream channel protection and stormwater management requirements of James City County, please refer to Chapter 8 and Chapter 23 of the James City County Code and the James City County Guidelines for Design and Construction of Stormwater Management BMP's (manual).

31. Add a note to the plan that states that the bioretention area will not be constructed until all contributing drainage areas have been stabilized.

(Please note that effective February 1st, 2001, the James City County Environmental Division, began use and implementation of the James City County, Stormwater Management/BMP Facilities, Record Drawing and Construction Certification, Standard Forms & Instructions. Copies of this document are available upon request.)

(Please note that effective March 1st, 2001, the James City County Environmental Division, began use and implementation of the James City County, Erosion & Sediment Control and Stormwater Management Design Plan Checklists. Copies of this document are available upon request.)

(Please note that effective March 1st, 2001, the James City County Environmental Division, began use and implementation of the James City County, Stormwater Drainage Conveyance Systems (Non-BMP related), General Design and Construction Guidelines. Copies of this document are available upon request.)

Record Drawing / Construction Certification Submittal for a BMP

Date: 1/24/03

Inspector:
- ☑ Pat Menichino
- ☐ Joe Buchite
- ☐ Beth Davis
- ☐ Gerry Lewis
- ☐ Jim Rudnicky
- ☐ Other: _____

Project: Williamsburg Montessori School / Expansion
BMP Facility: SAND Filter / BASIN
Plan No.: SP-26-01
Assigned County BMP ID Code: PC182

I have received a transmittal for a ☐ Record Drawing and ☒ Construction Certification for the above referenced facility on 1/13/03. Prior to full engineering review of these items and a field inspection, I am first forwarding the items to you to cursory review in case any major field changes were performed that I should be aware of and/or to ensure the record drawing accurately portrays what you saw in the field. Please review the drawing and return to me promptly so I can proceed with the review for certification purposes.

During my review, I will look at issues related to the BMP and its primary inflow and outflow conveyance systems, and may make comment in the following areas: Inspection/Maintenance agreement, Record Drawings (RD), Construction Certification (CC) and Construction-Related (CR) field items as it pertains to the BMP. If you have any other related non-BMP site issues such as site erosion, stabilization, removal of erosion & sediment controls, etc. that are not related to the BMP, you must proceed with closing out these items on your own accord. If needed, I can easily add these items to any comment letter that I may generate the Owner/Engineer for the BMP. Let me know if I need to add items for site issues to my process.

Scott

Scott. 2-7-03
BMP IS
O.K.
AS PER PLAN
G.EC