CERTIFICATE OF AUTHENTICITY

THIS IS TO CERTIFY THAT THE FOLLOWING ELECTRONIC RECORDS ARE TRUE AND ACCURATE REPRODUCTIONS OF THE ORIGINAL RECORDS OF JAMES CITY COUNTY GENERAL SERVICES DEPARTMENT- STORMWATER DIVISION; WERE SCANNED IN THE REGULAR COURSE OF BUSINESS PURSUANT TO GUIDELINES ESTABLISHED BY THE LIBRARY OF VIRGINIA AND ARCHIVES; AND HAVE BEEN VERIFIED IN THE CUSTODY OF THE INDIVIDUAL LISTED BELOW.

BMP NUMBER: **PC251**

DATE VERIFIED: **September 28, 2012**

QUALITY ASSURANCE TECHNICIAN: **Leah Hardenbergh**

Leah Hardenbergh

LOCATION: WILLIAMSBURG, VIRGINIA

Stormwater Division

MEMORANDUM

Date: March 28, 2012

To: Michael J. Gillis, Virginia Correctional Enterprises Document Management Services

From: Leah Hardenbergh

PO: 110426

Re: Files Approved for Scanning

General File ID or BMP ID:	**PC251**
PIN:	**4730100021**
Owner Name (if known):	**ORTALAN, METIN & JANICE M**
Legal Property Description:	**PT OF T T NIXON EST**
Site Address:	**1784 JAMESTOWN ROAD**

(For internal use only):

Box # 1

Agreements (in file as of scan date): Y Book or Doc #: 080024298/100001226

Contents for Stormwater Management Facilities As-built Files

Each file is to contain:

1. As-built plan
2. Completed construction certification
3. Construction Plan
4. Design Calculations
5. Watershed Map ~in calc.
6. Maintenance Agreement
7. Correspondence with owners
8. Inspection Records
9. Enforcement Actions
10. Geotechnical Reports

COPY

Prepared by + return to:
JCC Attorney's Office
101-C Mount's Bay Road
Williamsburg, VA 23185
(757) 253-6612

COUNTY OF JAMES CITY, VIRGINIA

DECLARATION OF COVENANTS
INSPECTION/MAINTENANCE OF DRAINAGE SYSTEM

Please type or print legibly in black ink. Covenantor(s) should submit this form to the JCC Environmental Division, 101-E Mounts Bay Road, Williamsburg, VA 23185.

THIS DECLARATION OF COVENANTS, made this 14 day of JANUARY, 20 10, between JANICE & METIN ORTAKAN, and all successors in interest, ("COVENANTOR(S)"), owner(s) of the following property:

Parcel Identification Number: 4730100021
Legal Description: PT OF TT NIXON EST
Project or Subdivision Name: MEDITERRANEAN RESTURANT
Document/Instrument No. 080024298 or Deed Book _____, Page No. _____,
and the County of James City, Virginia ("COUNTY.")

WITNESSETH:

I (We), the COVENANTOR(S), with full authority to execute deeds, mortgages, other covenants, and all rights, titles and interests in the property described above, do hereby covenant with the COUNTY as follows:

1. The COVENANTOR(S) shall provide maintenance for the drainage system including any runoff control facilities, conveyance systems and associated easements, hereinafter referred to as the "SYSTEM," located on and serving the above-described property to ensure that the SYSTEM is and remains in proper working condition in accordance with approved design standards, and with the law and applicable executive regulations. The SYSTEM shall not include any elements located within any Virginia Department of Transportation rights-of-way.

2. If necessary, the COVENANTOR(S) shall levy regular or special assessments against all present or subsequent owners of property served by the SYSTEM to ensure that the SYSTEM is properly maintained.

3. The COVENANTOR(S) shall provide and maintain perpetual access from public right-of-ways to the SYSTEM for the COUNTY, its agent and its contractor.

4. The COVENANTOR(S) shall grant the COUNTY, its agent and its contractor a right of entry to the SYSTEM for the purpose of inspecting, monitoring, operating, installing, constructing, reconstructing, maintaining or repairing the SYSTEM.

5. If, after reasonable notice by the COUNTY, the COVENANTOR(S) shall fail to maintain the SYSTEM in accordance with the approved design standards and with the law and applicable executive regulations, the COUNTY may perform all necessary repair or maintenance work, and the COUNTY may assess the COVENANTOR(S) and/or all property served by the SYSTEM for the cost of the work and any applicable penalties.

6. The COVENANTOR(S) shall indemnify and save the COUNTY harmless from any and all claims for damages to persons or property arising from the installation, construction, maintenance, repair, operation or use of the SYSTEM.

Instrument # 100001226

adopted
Recorded on Jan. 22, 2010

7. The COVENANTOR(s) shall promptly notify the COUNTY when the COVENANTOR(S) legally transfers any of the COVENANTOR(S) responsibilities for the SYSTEM. The COVENANTOR(S) shall supply the COUNTY with a copy of any document of transfer, executed by both parties.

8. The covenants contained herein shall run with the land and shall bind the COVENANTOR(S) and the COVENANTOR(S)' heirs, executors, administrators, successors and assignees, and shall bind all present and subsequent owners of property served by the SYSTEM.

9. This COVENANT shall be recorded in the County Land Records.

IN WITNESS WHEREOF, the COVENANTOR(S) has executed this DECLARATION OF COVENANTS as of the date first above written.

COVENANTOR(S)

Janice M. Ortalan
Signature

Signature

JANICE M. ORTALAN OWNER
Print Name and Title

METIN ORTALAN OWNER
Print Name and Title

ACKNOWLEDGMENT

COMMONWEALTH OF VIRGINIA
CITY/COUNTY OF James City, to wit:

I hereby certify that on this 15 day of January, 2010, before the subscribed, a Notary Public for the Commonwealth of Virginia, personally appeared Janice M. Ortalan and Metin Ortalan and did acknowledge the foregoing instrument to be his/her Act.

IN WITNESS WHEREOF, I have hereunto set my hand and official seal this 15 day of January, 2010.

MELANIE J. DAVIS COMMONWEALTH OF VIRGINIA NOTARY PUBLIC

[SEAL]

Melanie J. Davis
Notary Public

Notary Registration Number: 7014335
My Commission expires: 12/31/10

Approved as to form:

Asst. County Attorney

This Declaration of Covenants prepared by:

Signature: _____ Print Name and Title: Janice & Metin Ortalan

Address: 109 Indigo Dam Rd, Williamsburg, VA 23188

Phone Number: 757-220-0097

Drainage1_pre_doc
(Revised 9-5-08)

James City County Environmental Division
Stormwater Management/BMP Record Drawing & Construction Certification Review
Tracking Form

Project Name: Mediterranean Restaurant BMP
County Plan No.: SUP-0025-2008
Stormwater Management Facility: Wet Pond
BMP Phase #: ☐ I ☐ II ☐ III
☒ Information Package Received. Date/By:
☐ Completeness Check:
- ☒ Record Drawing Date/By: 12/21/2010 Land Tech
- ☒ Construction Certification Date/By: 7/31/10 S. Garsham
- ☐ RD/CC Standard Forms (Required for all BMPs after Feb 1st 2001Only)
- ☐ Insp/Maint Agreement # / Date: 100001226 1/22/10
- ☐ BMP Maintenance Plan Location:
- ☐ Other:

☐ Standard E&SC Note on Approved Plan Requiring RD/CC or County comment in plan review
- ☐ Yes ☐ No Location:

☒ Assign **County BMP ID Code #**: Code: PC-251
☒ Preliminary Input/Log into Division's "As-Built Tracking Log"
☐ Add Location to GIS Map. Obtain basic site information (GPIN, Owner, Address, etc.)
☒ Preliminary Log into Access Database (BMP ID #, Plan No., GPIN, Project Name, etc.)
☒ Active Project File Review (correspondence, H&H, design computations, etc.).
☒ Initial As-Built File setup (File label, folder, copy plan/details/design information, etc.).
☒ Inspector Check of RD/CC (forward to Inspector using transmittal for cursory review).
☒ Pre-Inspection Drawing Review of Approved Plan (Quick look prior to Field Inspection).
☒ Final Inspection (FI) Performed Date: 12/3/2010
☒ Record Drawing (RD) Review Date: 10/21/2010
☒ Construction Certification (CC) Review Date: 10/21/2010
☒ Actions:
- ☐ No comments.
- ☒ Comments. Letter Forwarded. Date: 5/25/2010
- ☐ Record Drawing (RD)
- ☒ Construction Certification (CC)
- ☒ Construction-Related (CR)
- ☐ Site Issues (SI)
- ☐ Other :

☐ Second Submission:
☐ Reinspection (if necessary):
☒ Acceptable for SWM Purposes (RD/CC/CR/Other). Ok to proceed with bond release.
☒ Complete "Surety Request Form".
☒ Check/Clean active file of any remaining material and finish "As-Built" file.
NA Add to County BMP Inventory/Inspection schedule (Phase I, II or III).
☒ Copy Final Inspection Report into County BMP Inspection Program file.
☐ Obtain Digital Photographs of BMP and save into County BMP Inventory.
☐ Request mylar/reproducible from As-Built plan preparer.
☒ Complete "As-built Tracking Log".
☒ Last check of BMP Access Database (County BMP Inventory).
NA Add BMP to JCC Hydrology & Hydraulic database (optional).
NA Add BMP to Municipal BMP list (if a County-owned facility)
NA Add BMP to PRIDE BMP ratings database.

Final Sign-Off

Inspector: [signature] Date: 1/4/2011

Chief Engineer: Date:

*** See separate checklist, if needed.

RECEIVED ON
MAY 27 '10
Stormwater Division

Environmental Division
MAY 12 2010
RECEIVED

James City County, Virginia
Environmental Division

Stormwater Management / BMP Facilities
Record Drawing and Construction Certification Forms

(Note: In accordance with the requirements of the Chesapeake Bay Preservation Ordinance, Chapter 23, Section 23-10(4), BMP's shall be designed and constructed in accordance with the manual entitled James City County Guidelines for Design and Construction of Stormwater Management BMP's. Erosion and sediment control policy and approved plans generally require that at the completion of the project and prior to release of surety, an "as-built" plan prepared by a registered Professional Engineer or Certified Land Surveyor must be provided for the drainage system for the project, including any Best Management Practice (BMP) facilities. In addition, for BMP facilities involving the construction of an impounding structure or dam embankment, certification is required by a Professional Engineer who has inspected the structure during its construction. Currently there are over 20 water quality type BMP's accepted by the County.)

Section 1 - Site Information:

Project Name: Site Plan of Mediterranean Restaurant
Structure/BMP Name: Extended Dry Detention Basin
Project Location: 1784 Jamestown Rd.
BMP Location: Rear of site behind Parking Lot
County Plan No.: SP - 0036 - 2009

Project Type:
- ☐ Residential
- ☐ Business
- ☒ Commercial
- ☐ Office
- ☐ Institutional
- ☐ Industrial
- ☐ Public
- ☐ Roadway
- ☐ Other _____

Tax Map/Parcel No.: 4730100021
BMP ID Code (if known): F-2
Zoning District:: LB
Land Use: Restaurant
Site Area (sf or acres): 1.27 ac

Brief Description of Stormwater Management/BMP Facility: Extended Dry Detention Basin with forebay receiving stormwater runoff from building + parking lot

Nearest Visible Landmark to SWM/BMP Facility: Restaurant Building

Nearest Vertical Ground Control (if known):
- ☒ JCC Geodetic Ground Control
- ☐ USGS
- ☐ Temporary
- ☐ Arbitrary
- ☐ Other

Station Number or Name: 318
Datum or Reference Elevation: 46.46
Control Description: 3 1/4" disk in concrete
Control Location from Subject Facility: Intersection State Rt 31 + State Route 615

Section 2 - Stormwater Management / BMP Facility Construction Information:

PreConstruction Meeting Held for Construction of SWM/BMP Facility: ☒ Yes ☐ No ☐ Unknown
Approx. Construction Start Date for SWM/BMP Facility: 1/10
Facility Monitored by County Representative during Construction: ☐ Yes ☐ No ☒ Unknown
Name of Site Work Contractor Who Constructed Facility: Reeds Enterprises LLC
Name of Professional Firm Who Routinely Monitored Construction: Unknown
Date of Completion for SWM/BMP Facility: 4/10
Date of Record Drawing/Construction Certification Submittal: _____

(Note: Record Drawing and Construction Certifications are required within thirty (30) days of the completion of Stormwater Management and/or BMP facility construction. Record Drawings and Construction Certifications must be reviewed and approved by the James City County Environmental Division prior to final inspection, acceptance and bond or surety release.)

Section 3 - Owner / Designer / Contractor Information:

Owner/Developer: *(Note: Site Owner or Applicant responsible for development of the project.)*

Name: Janice Ortalan
Mailing Address: 109 Indigo Dam Rd.
Williamsburg, Va. 23188
Business Phone: 220-0097 Fax: _____
Contact Person: Janice Ortalan Title: _____

Design Professional: *(Note: Professional Engineer or Certified Land Surveyor responsible for the design and preparation of plans and specifications for the Stormwater Management / BMP facility.)*

Firm Name: LandTech Resources, Inc.
Mailing Address: 205-E Bulfants Blvd.
Williamsburg, Va. 23188
Business Phone: 565-1677
Fax: 565-0782
Responsible Plan Preparer: Kenneth Jenkins
Title: Senior Engineer
Plan Name: Site Plan of Mediterranean Restaurant
Firm's Project No. 08-230
Plan Date: 3/18/09
Sheet No.'s Applicable to SWM/BMP Facility: C5 / C6 / C11 / ____ / ____

BMP Contractor: *(Note: Site Work Contractor directly responsible for construction of the Stormwater Management / BMP facility.)*

Name: Reeds Enterprise LLC
Mailing Address: 145 Saw Mill Rd.
Williamsburg, Va. 23188
Business Phone: 259-9011
Fax: _____
Contact Person: Wayne Reed
Site Foreman/Supervisor: Wayne Reed
Specialty Subcontractors & Purpose (for BMP Construction Only): _____

Section 4 - Professional Certifications:

Certifying Professionals: *(Note: A Registered Professional Engineer or Certified Land Surveyor is responsible for preparation of a Record Drawing, sometimes referred to as an As-Built plan, for the drainage system for the project including any Stormwater Management/BMP Facilities. A Registered Professional Engineer is responsible for the inspection, monitoring and certification of Stormwater Management / BMP facilities during its construction.)*

Record Drawing and Construction Certifications for Stormwater Management / BMP Facilities

Record Drawing Certification

Firm Name: LANDTECH RESOURCES, INC.
Mailing Address: 205-E BULIFANTS BLVD.
WILLIAMSBURG, VA 23188
Business Phone: 757-565-1677
Fax: 757-565-0782

Name: MATTHEW H. CONNOLLY
Title: PRESIDENT

Signature:
Date: 5/7/2010

I hereby certify to the best of my knowledge and belief that this record drawing represents the actual condition of the Stormwater Management / BMP facility. The facility appears to conform with the provisions of the approved design plan, specifications and stormwater management plan, except as specifically noted.

COMMONWEALTH OF VIRGINIA
MATTHEW H. CONNOLLY
Lic. No. 2053
5/7/2010
LAND SURVEYOR

_____ (Seal)

Virginia Registered Professional Engineer
or Certified Land Surveyor

Construction Certification

Firm Name: _____
Mailing Address: _____
_____
Business Phone: _____
Fax: _____

Name: _____
Title: _____

Signature: _____
Date: _____

I hereby certify to the best of my knowledge and belief that this Stormwater Management/BMP facility was monitored and constructed in accordance with the provisions of the approved design plan, specifications and stormwater management plan, except as specifically noted.

_____ (Seal)

Virginia Registered
Professional Engineer

Section 5 - Record Drawing and Construction Certification Requirements and Instructions:

☒ PreConstruction Meeting - Provides an opportunity to review SWM / BMP facility construction, maintenance and operation plans and address any questions regarding construction and/or monitoring of the structure. The design engineer, certifying professionals (if different), Owner/Applicant, Contractor and County representative(s) are encouraged to attend the preconstruction meeting. Advanced notice to the Environmental Division is requested. Usually, this requirement can be met simultaneously with Erosion and Sediment Control preconstruction meetings held for the project.

☒ A fully completed ***STORMWATER MANAGEMENT / BMP FACILITIES, RECORD DRAWING and CONSTRUCTION CERTIFICATION FORM*** and ***RECORD DRAWING CHECKLIST***. All applicable sections shall be completed in their entirety and certification statements signed and sealed by the registered professional responsible for individual record drawing and/or construction certification.

☒ The Record Drawing shall be prepared by a Registered Professional Engineer or Certified Land Surveyor for the drainage system of the project including any Best Management Practices.

☐ Construction Certification. Construction of Stormwater Management / BMP facilities which contain impoundments, embankments and related engineered appurtenances including subgrade preparation, compacted soils, structural fills, liners, geosynthetics, filters, seepage controls, cutoffs, toe drains, hydraulic flow control structures, etc. shall be visually observed and monitored by a Registered Professional Engineer or his/her authorized representative. The Engineer must certify that the structure, embankment and associated appurtenances were built in accordance with the approved design plan, specifications and stormwater management plan and standard accepted construction practice and shall submit a written certification and/or drawings to the Environmental Division as required. Soil and compaction test reports, concrete test reports, inspection reports, logs and other required construction material or installation documentation may be required by the Environmental Division to substantiate the certification, if specifically requested. The Engineer shall have the authority and responsibility to make minor changes to the approved plan, in coordination with the assigned County inspector, in order to compensate for unsafe or unusual conditions encountered during construction such as those related to bedrock, soils, groundwater, topography, etc. as long as changes do not adversely affect the integrity of the structure(s). Major changes to the approved design plan or structure must be reviewed and approved by the original design professional and the James City County Environmental Division.

☒ Record Drawing and Construction Certifications are required within **thirty (30) days** of the completion of Stormwater Management / BMP facility construction. Submittals must be reviewed and accepted by James City County Environmental Division prior to final inspection, acceptance and bond/surety release.

Dual Purpose Facilities - Completion of construction also includes an interim stage for Stormwater Management / BMP facilities which serve dual purpose as temporary sediment basins during construction and as permanent stormwater management / BMP facilities following construction, once development and stabilization are substantially complete. For these dual purpose facilities, construction certification is required once the temporary sediment basin phase of construction is complete. Final record drawing and construction certification of additional permanent components is required once permanent facility construction is complete.

Interim Construction Certification is required for those dual purpose embankment-type facilities that are generally ten (10) feet or greater in dam height (*) and may not be converted, modified or begin function as a permanent SWM / BMP structure for a period generally ranging from six (6) to eighteen (18) months or more from issuance of a Land Disturbance permit for construction.

Interim or final record drawing and construction certifications are not required for temporary sediment basins which are designed and constructed in accordance with current minimum standards and specifications for temporary sediment basins per the Virginia Erosion and Sediment Control Handbook (VESCH); have a temporary service life of less than eighteen (18) months; and will be removed completely once associated disturbed areas are stabilized, unless a distinct hazard to the public's health, safety and welfare is determined by the Environmental Division due to the size or presence of the structure or due to evidence of improper construction.

(*Note: Dam Height as referenced above is generally defined as the vertical distance from the natural bed of the stream or waterway at the downstream toe of the embankment to the top of the embankment structure in accordance with 4VAC50-20-30, Virginia Impoundment Structure Regulations and the Virginia Dam Safety Program.)

Record Drawings shall provide, at a minimum, all information as shown within these requirements and the attached **RECORD DRAWING CHECKLIST** specific to the type of SWM/BMP facility being constructed. Other additional record data may be formally requested by the James City County Environmental Division. *(Note: Refer to the current edition of the James City County Guidelines for Design and Construction of Stormwater Management BMP's manual for a complete list of acceptable BMP's. Currently there are over 20 acceptable water quality type BMP's accepted by the County.)*

Record Drawings shall consist of blue/black line prints and a reproducible (mylar, sepia, diazo, etc.) set of the approved stormwater management plan including applicable plan views, profiles, sections, details, maintenance plans, etc. as related to the subject SWM / BMP facility. The set shall indicate **"RECORD DRAWING "** in large text in the lower right hand corner of each sheet with record elevations, dimensions and data drawn in a clearly annotated format and/or boxed beside design values. Approved design plan values, dimensions and data shall not be removed or erased. Drawing sheet revision blocks shall be modified as required to indicate record drawing status. Elevations to the nearest 0.1' are sufficiently accurate except where higher accuracy is needed to show positive drainage. Certification statements as shown in Section 4 of the Record Drawing and Construction Certification Form, ***or similar forms thereof***, and professional signatures and seals, with dates matching that of the record drawing status in the revision or title block, are also required on all associated record drawing plans, prints or reproducibles.

Submission Requirements. Initial and subsequent submissions for review shall consist of a minimum of one (1) blue/black line set for record drawings and one copy of the construction certification documents with appropriate transmittal. Under certain circumstances, it is understood that the record drawing and construction certification submissions may be performed by different professional firms. Therefore, record drawing submission may be in advance of construction certification or vice versa. Upon approval and prior to release of bond/surety, final submission shall include one (1) reproducible set of the record drawings, one (1) blue/black line set of the record drawings and one (1) copy of the construction certification. Also for current and/or future incorporation into the County BMP database and GIS system, it is requested that the record drawings also be submitted to the Environmental Division on a diskette or CD-ROM in an acceptable electronic file format such as *.dxf, *.dwg, etc. or in a standard scanned and readable format. The electronic file requirement can be discussed and coordinated with Environmental Division staff at the time of final submission.

STORMWATER MANAGEMENT / BMP FACILITIES
RECORD DRAWING CHECKLIST

(Key for Checklist is as follows: XX Acceptable N/A Not Applicable Inc Incomplete)

I. Methods and Presentation: *(Required for all Stormwater Management / BMP facilities.)*

XX 1. All constructed facilities meet approved design plans, unless otherwise shown. Record information or deviations from approved design plan shown in clearly annotated format and/or boxed beside design values.

XX 2. Elevations to the nearest 0.1' unless higher accuracy is needed to show positive drainage.

XX 3. All plan sheets labeled with "RECORD DRAWING" in large text in lower right hand corner (Approved County Plan Number and BMP ID Code can be included if known).

N/A 4. All plan sheet revision blocks modified to indicate date and record drawing status.

XX 5. All plan sheets have certification statements and certifying professional's signature and seal.

II. Minimum Standards: *(Required for all Stormwater Management / BMP facilities, as applicable.)*

XX 1. All requirements of Section I (Methods and Presentation) apply to this section.

XX 2. Plan Views: Show general location, arrangement and dimensions. Location and alignment shall generally match approved design plans.

XX 3. Profile or elevations along top or berm of the facility. At a minimum, elevations are required at each end, at intervals not to exceed 50 feet and where low spots may be present. Top of embankment or berm elevations must be no less than design elevation plus any settlement allowances.

XX 4. Top widths, berm widths and embankment side slopes.

XX 5. Show length, width and depth of facility or grading, contours or spot elevations as required to verify permanent pool and design storage volumes were met or were reasonably close to the approved design. Evaluation of as-built grading, contours, spot elevations, or cross-sections, may be necessary by the professional to ensure approved design configurations, depths and volumes were closely maintained. If grading or elevations are significantly different from the approved plan, the Environmental Division shall be contacted immediately to determine whether the variation is acceptable or whether further evidence will be required. Facilities which do not closely resemble approved plan grades, elevations or configurations may require regrading by the Contractor; check volumetric computations; and/or a check hydraulic routing to ensure approved design water surface elevations, discharges or freeboard were closely maintained.

XX 6. Cross-section of the embankment through the principal spillway or outlet barrel. Must extend at least 100 ft. downstream of the pipe outlet or to recorded site property line, whichever is closer. Proper correlation is required between principal spillway (control structure) crest, emergency spillway crest, orifice and weirs and the top of the dam or facility. All elevations and dimensions must reasonably match the design plan or be sequentially relative to each other and the facility must reflect the required design storage volume(s) and/or design depth.

XX 7. Profile or elevations along the entire centerline of the emergency spillway. Emergency spillway may be steeper, but no flatter or narrower than design.

XX 8. Elevation of the principal spillway crest or outlet crest of the structure.

XX 9. Primary control structure (riser) diameter or dimensions, height, type of material and base size. Indicate provisions for access that are present such as steps, ladders, etc.

XX 10. Dimensions, locations and elevations of outlet orifices, weirs, slots and drains.

XX 11. Type and size of anti-vortex and trash rack device. Height, diameter, dimensions, bar spacings (if applicable) and elevations relative to the principal spillway crest. Indicate if lockable hatch is present or not.

N/A 12. Type, location, size and number of anti-seep collars or documentation of other methods utilized for seepage control. **May need to obtain this information during construction.**

N/A 13. Top of impervious core embankment, core trench limits and elevation of cut-off trench bottom. **May need to obtain this information during construction.**

XX 14. Elevation of the principal spillway barrel (outlet pipe) inlet and outlet invert.

XX 15. Outlet barrel diameter, length, slope, type and thickness class of material and type of flared end sections, headwall or endwall.

XX 16. Outfall protection dimension, type and depth of rock and if underlain filter fabric is present.

N/A 17. BMP interior and periphery landscaping zones conform with arrangements and requirements of the approved design plan.

XX 18. Maintenance plan taken from approved design plan transposed onto record drawing set.

N/A 19. Fencing location and type, if applicable to facility.

XX 20. BMP vicinity properly cleaned of stockpiles and construction debris.

XX 21. No visual signs of erosion or channel degradation immediately downstream of facility.

N/A 22. Any other information formally requested by the Environmental Division specific to the constructed SWM/BMP facility.

STORMWATER MANAGEMENT / BMP FACILITIES
RECORD DRAWING CHECKLIST

(Key for Checklist is as follows: XX Acceptable N/A Not Applicable Inc Incomplete)

VIII. Group F - Extended Dry Detention

(Includes F-1 Timber Walls; and F-2 Dry Extended Detention with Forebay)

- EXCEPT 12, 13, 17, 19 & 22

XX F1. All requirements of Section II, Minimum Standards, apply to Group F facilities.

XX F2. Basin bottom has positive slope and drainage from all basin inflow points to the riser (or outflow) location.

N/A F3. Timber wall BMP used in intermittent stream only. (ie. Prohibited in perennial streams.)

XX F4. Forebay provided approximately 20 ft. upstream of the facility. Forebays generally 4 to 6 feet in depth.

XX F5. A reverse slope pipe, vertical stand pipe or mini-barrel and riser was provided to prevent clogging.

XX F6. Principal spillway and outlet barrel provided consisting of reinforced concrete pipe with O-Ring gaskets for watertight joint construction.

N/A F7. Mini-barrel and riser, if used, contains a removable trash rack to reduce clogging.

XX F8. Low flow orifice, if used, has a minimum diameter of three (3) inches or two (2) inches if internal orifice control was utilized and a small, cage type external trash rack.

N/A F9. Timbers properly reinforced or concrete footing provided if soil conditions were prohibitive.

N/A F10. Timber wall cross members extended to a minimum depth of two (2) feet below ground elevation.

XX F11. Protection against erosion and scour from the low flow orifice and weir-flow trajectory provided.

XX F12. Stilling basin or standard outlet protection provided at principal spillway outlet.

XX F13. Adequate, direct access provided to the facility. Access corridor to facility is at least ten (10) feet wide, slope is less than twenty (20) percent and appropriate stabilization provided for equipment and vehicle use. Access extends to forebay, standpipe and timber wall, as applicable.

XX F14. No visual signs of undercutting of timber walls or clogging of the low orifice were present.

XX F15. No visual signs of erosion or channel degradation immediately downstream of facility.

INC F16. No visible signs of accumulated silt/sediment were present in the facility following construction or alternately, accumulated silt/sediment was properly removed and no adverse affects to the function of the facility are anticipated.

6-8" SEDIMENT FOUND IN POND BOTTOM

STORMWATER MANAGEMENT / BMP FACILITIES
RECORD DRAWING CHECKLIST

(Key for Checklist is as follows: XX Acceptable N/A Not Applicable Inc Incomplete)

X. Storm Drainage Systems (Associated with BMP's Only)

(Includes all incidental stormwater drainage conveyance systems associated with SWM/BMP facilities such as onsite or offsite storm drains, open channels, inlets, manholes, junctions, outlet protections, deflectors, etc. These facilities are external to the treatment function of, but are directly associated with drainage to and/or from a constructed SWM/BMP facility. The intent of this portion of the certification is to accurately identify the type and quantity of inflow or outflow points associated with the facility for future reference. The Professional may use his/her own discretion to determine inclusive facilities to meet the intent of this section. As a general rule, storm drainage systems would include incidental facilities to the nearest access structure upslope or downslope from the normal physical limits of the facility or 800 feet of storm drainage conveyance system length, whichever is less.)

XX SD1. All requirements of Section II, Minimum Standards, apply to Storm Drainage Systems.

XX SD2. Horizontal location of all pipe and structures relative to the SWM/BMP facility.

XX SD3. Type, top elevation and invert elevation of all access type structures (inlets, manholes, etc.).

XX SD4. Material type, size or diameter, class, invert elevations, lengths and slopes for all pipe segments.

XX SD5. Class, length, width and depth of riprap and outlet protections or dimensions of special energy dissipation structures.

XII. Other Systems

(Includes any non-typical, specialty, manufactured or innovative stormwater management/BMP practices or systems generally accepted for use as or in conjunction with other acceptable stormwater management / BMP practices. Requires evidence of prior satisfactory industry use and prior Environmental Division approval, waiver or exception .)

N/A O1. All requirements of Section II, Minimum Standards, apply to this section.

N/A O2. Certification criteria to be determined on a case-by-case basis by the Environmental Division specific to the proposed SWM/BMP facility.

Section 4 - Professional Certifications:

Certifying Professionals: *A Registered Professional Engineer or Certified Land Surveyor is responsible for preparation of a Record Drawing, sometimes referred to as an As-Built plan, for the stormwater facilities for the project including all BMP and conveyance systems. A Registered Professional Engineer is responsible for the inspection, monitoring and certification of all stormwater facilities – BMP and conveyance systems during their construction.*

Record Drawing and Construction Certifications for Stormwater Facilities - BMP and Conveyance Systems

Record Drawing Certification

Firm Name: _____

Mailing Address: _____

_____

Business Phone: _____

Fax: _____

Name: _____

Title: _____

Signature: _____

Date: _____

I hereby certify to the best of my knowledge and belief that this record drawing represents the actual condition of the Stormwater Facilities. The facilities appear to conform to the provisions of the approved construction plans and specifications except as specifically noted.

_____ (Seal)

Virginia Registered Professional Engineer or Certified Land Surveyor

Construction Certification

Firm Name: ECS Mid-Atlantic LLC

Mailing Address: 108 Ingram Road Suite 1

Williamsburg Va 23188

Business Phone: 757-229-6677

Fax: 757-229-9978

Name: B. Scott Gresham P.E.

Title: Construction Services Manager

Signature: B. Scott Gresham

Date: 7/13/10

I hereby certify to the best of my knowledge and belief that these Stormwater Facilities were monitored and constructed in accordance with the provisions of the approved construction plans and specifications except as specifically noted.

COMMONWEALTH OF VIRGINIA
7/13/10
B. SCOTT GRESHAM
Lic. No. 037785
PROFESSIONAL ENGINEER

B. Scott Gresham (Seal)

Virginia Registered Professional Engineer

Environmental Division

DEC 21 2010

RECEIVED

James City County, Virginia
Stormwater Division

Stormwater Facilities - BMP and Conveyance Systems
Record Drawing and Construction Certification Forms

Note: In accordance with the requirements of the Chesapeake Bay Preservation Ordinance, Chapter 23, Section 23-10(4), BMPs shall be designed and constructed in accordance with the manual entitled* James City County Guidelines for Design and Construction of Stormwater Management BMPs. *The Subdivision Ordinance, Chapter 19-62, the Zoning Ordinance, Chapter 24-159, and approved construction plans generally require that at the completion of the project and prior to release of surety, an "as-built" plan prepared by a registered Professional Engineer or Certified Land Surveyor must be provided for the drainage system for the project including any Best Management Practice (BMP) facilities. In addition, for BMP facilities, written construction certification is required by a Professional Engineer who inspected the structure during its construction. Currently there are over 20 water quality type BMPs accepted by the County.

Section 1 - Site Information:

Project Name: Mediterranean Restaurant

Structure/BMP Name: _____

Project Location: 1184 Jamestown Road, Williamsburg Va.

BMP Location: _____

County Plan No.: _____ - _____ - _____

Project Type: ☐ Residential ☐ Business Tax Map/Parcel No.: _____

☐ Commercial ☐ Office BMP ID Code (if known): _____

☐ Institutional ☐ Industrial Zoning District: _____

☐ Public ☐ Roadway Land Use: _____

☐ Other _____ Site Area (sf or acres): _____

Brief Description of Stormwater Management/BMP Facility: _____

_____

_____

_____

Nearest Visible Landmark to SWM/BMP Facility: _____

Nearest Vertical Ground Control (if known):

☐ JCC Geodetic Ground Control ☐ USGS ☐ Temporary ☐ Arbitrary ☐ Other

Station Number or Name: _____

Datum or Reference Elevation: _____

Control Description: _____

Control Location from Subject Facility: _____

Section 2 - Stormwater Management / BMP Facility Construction Information:

Preconstruction Meeting Held for Construction of SWM/BMP Facility: ☐ Yes ☒ No ☐ Unknown

Approx. Construction Start Date for SWM/BMP Facility: 2/12/10

Facility Monitored by County Representative during Construction: ☐ Yes ☐ No ☐ Unknown

Name of Site Work Contractor Who Constructed Facility: Reed Enterprises

Name of Professional Firm Who Routinely Monitored Construction: ECS Mid-Atlantic

Date of Completion for SWM/BMP Facility: _____

Date of Record Drawing/Construction Certification Submittal: _____

(Note: Record Drawing and Construction Certifications are required within thirty (30) days of the completion of construction of a Stormwater Facility – BMP or Conveyance system. Record Drawings and Construction Certifications must be reviewed and approved by the James City County Stormwater Division prior to final inspection, acceptance and surety release.)

Section 3 - Owner / Designer / Contractor Information:

Owner/Developer: *(Note: Site Owner or Applicant responsible for development of the project.)*

Name: _____

Mailing Address: _____

Business Phone: _____ Fax: _____

Contact Person: _____ Title: _____

Design Professional: *(Note: Professional Engineer or Certified Land Surveyor responsible for the design and preparation of plans and specifications for the Stormwater facilities.)*

Firm Name: _____

Mailing Address: _____

Business Phone: _____ Fax: _____

Responsible Plan Preparer: _____

Title: _____

Plan Name: _____

Firm's Project No. _____ Plan Date: _____

Sheet No. Applicable to SWM/BMP Facility: _____ / _____ / _____ / _____ / _____

Stormwater Facility Contractor: *(Note: Site Work Contractor directly responsible for construction of the Stormwater facilities.)*

Name: _____

Mailing Address: _____

Business Phone: _____ Fax: _____

Contact Person: _____

Site Foreman/Supervisor: _____

Specialty Subcontractors & Purpose (for BMP Construction Only): _____

_____

_____

_____

_____

Section 4 - Professional Certifications:

Certifying Professionals: *A Registered Professional Engineer or Certified Land Surveyor is responsible for preparation of a Record Drawing, sometimes referred to as an As-Built plan, for the stormwater facilities for the project including all BMP and conveyance systems. A Registered Professional Engineer is responsible for the inspection, monitoring and certification of all stormwater facilities – BMP and conveyance systems during their construction.*

Record Drawing and Construction Certifications for Stormwater Facilities - BMP and Conveyance Systems

Record Drawing Certification

Firm Name: _____
Mailing Address: _____
_____
Business Phone: _____
Fax: _____

Name: _____
Title: _____

Signature: _____
Date: _____

I hereby certify to the best of my knowledge and belief that this record drawing represents the actual condition of the Stormwater Facilities. The facilities appear to conform to the provisions of the approved construction plans and specifications except as specifically noted.

_____ (Seal)
Virginia Registered Professional Engineer
or Certified Land Surveyor

Construction Certification

Firm Name: ECS Mid-Atlantic LLC
Mailing Address: 108 Ingram Road Suite 1
Williamsburg Va 23188
Business Phone: 757-229-6677
Fax: 757-229-9978

Name: B. Scott Gresham P.E.
Title: Construction Services Manager

Signature: _____
Date: 7/13/10

I hereby certify to the best of my knowledge and belief that these Stormwater Facilities were monitored and constructed in accordance with the provisions of the approved construction plans and specifications except as specifically noted.

COMMONWEALTH OF VIRGINIA
7/13/10
B. SCOTT GRESHAM
Lic. No. 037785
PROFESSIONAL ENGINEER

_____ (Seal)
Virginia Registered
Professional Engineer

RECEIVED
MAR 2009
Planning Department

James City County, Virginia
Environmental Division

Erosion and Sediment Control and Stormwater Management Design Plan Checklists

Table of Contents

Contents		Page
Erosion and Sediment Control Plan		
I.	General	1
II.	Site Plan	1
III.	Narrative	3
IV.	Calculations	4
Stormwater Management Design Plan		
I.	General	5
II.	Stormwater Conveyance Systems	7
III.	Stormwater Management / BMP Facilities	8
IV.	Outlet Protections	14
V.	Additional Comments and Information	14

GENERAL INFORMATION

Project Name: Mediterranean Restaurant 1784 Jamestown Rd
Owner / Applicant: Jaunce Ortalan
Plan Preparer: Kenneth Jenkins Email: _____
Project Location: 1784 Jamestown Rd.
Tax Map / Parcel: 4730100021
County Plan No. (if known): _____
County BMP Type: Extended Dry Detention Basin (F-2)
Other information submitted in addition to this checklist (Check all that apply):

- ☒ Design or Construction Drawings (Plans, Profiles, Details, etc.).
- ☒ Erosion & Sediment Control Plan (Plans, Details, etc.).
- ☒ Erosion & Sediment Control Plan Design Report.
- ☒ Stormwater Management Design Plan (Plans, Profiles, Details, etc.).
- ☒ Stormwater Management Design Report.
- ☐ Other, List: _____

Issue Date
March 1, 2001

JAMES CITY COUNTY, VIRGINIA
ENVIRONMENTAL DIVISION

EROSION AND SEDIMENT CONTROL PLAN CHECKLIST

I. *GENERAL:*

Yes No N/A

☒ ☐ ☐ *FAMILIARITY* with current versions of Chapter 8, Erosion and Sedimentation Control and Chapter 23, Chesapeake Bay Preservation ordinances of the Code of James City County, Virginia and the Virginia Erosion and Sediment Control Handbook (VESCH).

☒ ☐ ☐ *LAND DISTURBING PERMIT AND SILTATION AGREEMENT* with surety are required for the project.

☒ ☐ ☐ *VARIANCE* if necessary, requested in writing, for the plan approving authority to waive or modify any of the minimum standards and specifications of the VESCH deemed inappropriate based on site conditions specific to this review case only. Variances which are approved shall be properly documented in the plan and become part of the approved erosion and sediment control plan for the site.

II. *SITE PLAN:*

Yes No N/A

☒ ☐ ☐ *VICINITY MAP* locating the site in relation to the surrounding area. Include any major landmarks which might assist in physically locating the site.

☒ ☐ ☐ *INDICATE NORTH* direction in relation to the site.

☒ ☐ ☐ *LIMITS OF CLEARING AND GRADING* for the site including that required for implementation of erosion and sediment controls, stockpile areas and utilities.

☒ ☐ ☐ *DISTURBED AREA ESTIMATES* in acres or square feet for the project.

☒ ☐ ☐ *EXISTING TOPOGRAPHY* or contours for the site at no more than 5 foot contour interval.

☒ ☐ ☐ *FINAL TOPOGRAPHY*, contours or proposed site grading in accordance with the design plan which indicates changes to existing topography and drainage patterns at no more than 2 foot contour interval (or 1 foot contours where required).

☒ ☐ ☐ *EXISTING AND PROPOSED SPOT ELEVATIONS* to supplement existing and proposed contours, topography or site grading information. Spot elevations may replace final contours in some instances, especially if terrain is in a low lying area or relatively flat.

☒ ☐ ☐ *EXISTING VEGETATION* including existing tree lines, grassed or unique vegetation areas.

Yes	No	N/A	
☒	☐	☐	*EXISTING SITE FEATURES* including roads, buildings, homes, utilities, streams, fences, structures and other important surface features of the site.
☒	☐	☐	*SOILS MAP* with soil symbols, boundaries and legend in accordance with the current Soil Survey of James City and York Counties and the City of Williamsburg, Virginia.
☒	☐	☐	*ENVIRONMENTAL INVENTORY* in accordance with Section 23-10(2) of the Chesapeake Bay Preservation Ordinance of James City County. Inventory generally includes: tidal shores and wetlands, non-tidal wetlands, resource protection area, hydric soils and slopes steeper than 25 percent. For wetlands, provide a copy of issued permits or satisfactory evidence that appropriate permits are being pursued for the entire project.
☒	☐	☐	*100-YEAR FLOODPLAIN LIMITS* or any special flood hazard areas or flood zones based on appropriate Federal Management Agency Flood Insurance Rate Maps (FIRMs) or Flood Hazard Boundary Maps (FHBMs) of James City County, Virginia.
☒	☐	☐	*DRAINAGE AREAS* for offsite and onsite areas, existing or proposed as applicable. Include drainage divides and directional labels for all subareas at points of interest and size (in acres), weighted runoff coefficient or curve number and times of concentration for each subarea.
☒	☐	☐	*CRITICAL EROSION AREAS* which require special consideration or unique erosion and sediment control measures. Refer to the VESCH, Chapter 6 for criteria.
☒	☐	☐	*DEVELOPMENT PLAN* for the site showing all improvements such as buildings, structures, parking areas, access roadways, above and below ground utilities, stormwater management and drainage facilities, trails or sidewalks, proposed vegetation and landscaping, amenities, etc.
☒	☐	☐	*LOCATION OF PRACTICES* proposed for erosion and sediment control, tree protection and temporary stormwater management due to land disturbance activities at the site. Use standard abbreviations, labels and symbols consistent for plan views based on minimum standards and specifications in Chapter 3 of the VESCH.
☒	☐	☐	*TEMPORARY STOCKPILE AREAS* or staging and equipment storage areas as required for onsite or offsite construction activities or indicate that none are anticipated for this project.
☐	☐	☒	*OFFSITE LAND DISTURBING AREAS* including borrow sites, waste areas, utility extensions, etc. and required erosion and sediment controls. If none are anticipated for the project, then indicate on the plans by general or erosion and sediment control notes.
☒	☐	☐	*DETAILS* or alternately, appropriate reference to current minimum standards and specifications of the VESCH for each measure proposed for the project. Non-modified, standard duplicated details (silt fence, diversion dikes, etc.) may be referenced to the current version of the VESCH. Specific dimensional or modified standards (basins, traps, outlet protections, check dams, etc.) require presentation on detail sheets. Schedules or tables may be used for multiple site measures such as sediment traps, basins, channels, slope drains, etc. Any modification to standard details should be clearly defined, explained and illustrated.

Yes	No	N/A	
☒	☐	☐	*MAINTENANCE PLAN* or alternately, appropriate reference to current minimum standards and specifications of the VESCH, outlining the inspection frequency and maintenance requirements for all erosion and sediment control measures proposed for the project.
☐	☐	☒	*TRENCH DEWATERING* methods and erosion and sediment controls, if anticipated for the project.
☒	☐	☐	*CONSTRUCTION SEQUENCE* outlining the anticipated sequence for installation of erosion and sediment controls and site, grading and utility work to be performed for the project by the site contractor.
☐	☐	☒	*PHASING PLAN* if required for larger project sites that are to be developed in stages or phases.
☒	☐	☐	*STANDARD COUNTY NOTES* are required to be placed on the erosion and sediment control plan. Refer to the standard James City County Erosion and Sediment Control Notes dated May 5, 1999.
☒	☐	☐	*PROFESSIONAL SEAL AND SIGNATURE* required on final and complete approved plans, drawings, technical reports and specifications.

III. ***NARRATIVE:***

Yes	No	N/A	
☒	☐	☐	*PROJECT DESCRIPTION* briefly describing the nature and purpose of the land disturbing activity and the acreage to be disturbed.
☒	☐	☐	*EXISTING SITE CONDITIONS* description of existing topography, land use, cover and drainage patterns at the site.
☒	☐	☐	*ADJACENT AREA* descriptions of neighboring onsite or offsite areas such as streams, lakes, property, roads, etc. and potential impacts due to concentrated flow or runoff from the land disturbing activity.
☒	☐	☐	*OFFSITE DISTURBED AREA* descriptions of proposed borrow sites, waste or surplus areas, utility extensions and erosion and sediment controls to be implemented.
☒	☐	☐	*SOILS DESCRIPTION* briefly summarizing site, disturbed area and drainage basin soils including name, unit, hydrologic soil group (HSG) classification, surface runoffpotential, erodibility, permeability, depth, texture, structure, erosion hazards, shrink-swell potential, limitations for use and anticipated depths to bedrock and the seasonal water table, as applicable.
☒	☐	☐	*CRITICAL AREAS* on the site which many have potentially serious erosion and sediment control problems and special considerations required (ie. steep slopes, hydric soils, channels, springs, sinkholes, water supply reservoirs, groundwater recharge areas, etc.)

Yes No N/A

☑ ☐ ☐ *PROPOSED EROSION & SEDIMENT CONTROL MEASURES* inclusive to the specific erosion and sediment control plan as proposed for the land disturbing activity. Measures should be consistent with those proposed on the site drawings. Address general use, installation, limitations, sequencing and maintenance requirements for each control measure.

☑ ☐ ☐ *STABILIZATION MEASURES* required for the site, either temporary or permanent, and during and following construction including temporary and permanent seeding and mulching, paving, stone, soil stabilization blankets and matting, sodding, landscaping or special stabilization techniques to be utilized at the site.

☑ ☐ ☐ *STORMWATER MANAGEMENT CONSIDERATIONS* for the site, either of temporary or permanent nature, and strategies, sequences and measures required for control. May reference the stormwater management plan for the site, if prepared, for permanent stormwater management facilities and control of drainage once the site is stabilized.

IV. ***CALCULATIONS:***

Yes No N/A

☑ ☐ ☐ *CALCULATIONS AND COMPUTATIONS* associated with hydrology, hydraulics and design of proposed temporary and permanent erosion and sediment control measures including: sediment traps and basins, diversions, stormwater conveyance channels, culverts, slope drains, outlet protections, etc. Computations are not required on the construction plan and may be attached in a supplemental erosion and sediment control plan design report, if presented in a clear and organized format.

☐ ☐ ☑ *TEMPORARY SEDIMENT BASIN DESIGN DATA SHEET* submitted for each basin along with schematic or sketch cross-section showing applicable design and construction data, storage volumes (wet-dry), dimensions and elevations. Peak design runoff to be based on the 2- or 25-year design storm event based on maximum disturbed site conditions (existing, interim or proposed conditions) in accordance with Minimum Standard 3.14 of the VESCH.

JAMES CITY COUNTY, VIRGINIA
ENVIRONMENTAL DIVISION

STORMWATER MANAGEMENT DESIGN PLAN CHECKLIST

I. *GENERAL:*

Yes	No	N/A	
☑	☐	☐	*FAMILIARITY* with current versions of the James City County Guidelines for Design and Construction of Stormwater Management BMPs manual; Chapter 8, Erosion and Sediment Control and Chapter 23, Chesapeake Bay Preservation ordinances of the Code of James City County, Virginia; the Virginia Erosion and Sediment Control Handbook (VESCH); and the Virginia Stormwater Management Handbook (VSMH).
☑	☐	☐	*WAIVER OR EXCEPTION* if necessary, requested in writing, for the plan approving authority to waive or except the requirements of Chapter 23, Chesapeake Bay Preservation ordinance in accordance with procedure established in Sections 23-14 through 23-17 of the ordinance. Applies to this review case only.
☐	☐	☑	*VARIANCE REQUEST* if necessary, requested in writing for the plan approving authority to waive or modify any of the minimum standards and specifications of the VESCH deemed inappropriate based on site conditions specific to this review case only. Variances which are approved shall be properly documented in the plan and become part of the approved erosion and sediment control plan for the site.
☑	☐	☐	*PROFESSIONAL SEAL AND SIGNATURE* required on final and complete approved stormwater management plans, drawings, technical reports and specifications.
☑	☐	☐	*WORKSHEET FOR BMP POINT SYSTEM* to ensure the stormwater management plan for the project attains at least 10 BMP points (New Development) or traditional pollutant load reduction computations per the Chesapeake Bay Local Assistance Manual (Redevelopment Only).
☐	☐	☑	*PROPOSED CONSERVATION EASEMENT AREAS* for any natural open space points claimed in the BMP worksheet.
☑	☐	☐	*INSPECTION/MAINTENANCE AGREEMENT* is required to be prepared and executed with the County for the project.
☑	☐	☐	*FEMA FIRM PANEL* reference with designated special flood hazard areas or zone designations associated with the site, as applicable.
☑	☐	☐	*DRAINAGE AREA MAP* at a maximum scale of 1"=200' scale showing drainage area boundaries for pre- and postdevelopment conditions and associated time of concentration flow paths. Labels to include drainage area size, runoff coefficient or curve number and time of concentration for each subarea shown on the map.

Yes	No	N/A	
☑	☐	☐	*SOILS MAP* with soil symbols, boundaries and legend in accordance with the current Soil Survey of James City and York Counties and the City of Williamsburg, Virginia with approximate locations of the project site, BMPs and applicable drainage basins.
☑	☐	☐	*STORMWATER MANAGEMENT NARRATIVE* in a brief and simple format which describes the project; location; site and drainage basin soil characteristics; receiving water or drainage facility; existing site and drainage basin conditions (topography, land use, cover, slopes, etc.); proposed site development; proposed stormwater management and drainage plan including County BMP type selected; summary of hydrology and hydraulics; maintenance program; and any special assumptions utilized for development of the stormwater management and drainage design plan or computations.
☐	☐	☑	*TEMPORARY STORMWATER MANAGEMENT* (if applicable) for control of stormwater runoff encountered during construction activities in addition to measures provided in the erosion and sediment control plan or stormwater management/drainage plan for the site. Adequate protection measures or sequencing provided.
☐	☐	☑	*MODIFICATION PLAN* clearly defined for temporary sediment control structures which will be converted to permanent SWM/BMP structures. Includes appropriate hydrologic and hydraulic computations, conversions, sequencing and cleanout information or details. Normally related to primary control structures associated with dry detention or wet retention ponds. Normally not permitted for Group C or D categories such as bioretention, infiltration and filtering system facilities.
☑	☐	☐	*STORMWATER MANAGEMENT and DRAINAGE DESIGN REPORT* in a bound 8-1/2 x 11 inch size format. Report shall generally include a title sheet, date, project identification, owner and preparer information, table of contents, narrative, summaries and computations as required. Computations may include: backwater, closed conduit, headwater, hydraulic, hydraulic grade line, hydrology, inlet, open channel, storm sewer, water quality, extended detention or stream channel protection and muti-stage storm routing calculations, as applicable, for the project. Computation data may include hand or computer generated computations, maps or schematics. All information should be presented in a clear, easy to follow format and should closely match construction plan information.
☑	☐	☐	*PLAN VIEW* at 1 inch = 50 ft. scale or less (1" = 40', 1" = 30', etc.)
☑	☐	☐	North arrow and plan legend.
☑	☐	☐	Property lines.
☑	☐	☐	Adjacent property information.
☑	☐	☐	Existing site features and existing impervious cover areas.
☑	☐	☐	Impervious cover tabulations.
☑	☐	☐	Existing drainage facilities (natural or manmade).
☑	☐	☐	Existing environmentally sensitive areas (RPA, wetlands, floodplain, steep slopes, critical soils, buffers, etc.).
☑	☐	☐	Existing and proposed contours (1' or 2' contour interval) and spot elevations as necessary to define high and low topography.
☑	☐	☐	Existing and proposed easement locations.

Yes	No	N/A	
☒	☐	☐	Proposed site improvements and proposed impervious cover areas.
☒	☐	☐	Proposed stormwater conveyance, drainage and management facilities with appropriate labeled construction data and information.
☒	☐	☐	Proposed landscaping and seeding plans (disturbed areas, pond interior, etc.).
☒	☐	☐	Proposed slope stabilization areas (riprap, blankets, mattings, walls, etc.).
☒	☐	☐	Delineation of permanent pools and the 1-, 2-, 10- and 100-year Design Water Surface Elevations.
☐	☐	☒	Delineation of ponding, headwater, surcharge or backwater areas which may affect adjacent existing or proposed buildings, structures or upstream adjacent properties.
☐	☐	☒	Test boring locations with reference surface elevations (if known).
☒	☐	☐	Risers, barrels, underdrains, overflows and outlet protections.
☒	☐	☐	Emergency spillway level section and outlet channel.
☒	☐	☐	Existing and proposed site utilities and protection measures.
☒	☐	☐	Erosion and sediment control measures (for site or BMP).
☒	☐	☐	Maintenance or access corridors to permanent stormwater management, BMP or drainage facilities.

II. *STORMWATER CONVEYANCE SYSTEMS:*

Yes	No	N/A	
☒	☐	☐	*PLAN VIEWS*
☒	☐	☐	Storm drain lengths, sizes, types, classes and slopes for all segments. Label directly on plan or use structure/pipe schedule.
☒	☐	☐	Access structure (inlets, manholes, junctions, etc.) rim elevations, inverts, type and required grate or top unit and lengths labeled.
☒	☐	☐	All structure numbers labeled.
☒	☐	☐	Adequate horizontal clearance from other site utilities or structures.
☐	☐	☒	*PROFILES* generally are not required but are encouraged to expedite review. If not provided, ensure all pipe segments have adequate minimum cover, do not exceed maximum depths of cover for the type/class of pipe specified and do not conflict with other site utilities or excavation areas.
☒	☐	☐	*DETAILS*
☒	☐	☐	Typical storm drain bedding details or reference note.
☒	☐	☐	Standard details or reference note for all proposed access structure types (inlets, manholes, junctions, etc.).
☒	☐	☐	Inlet shaping detail or applicable reference note.
☒	☐	☐	Step detail or applicable reference note (if depth 4 ft. or more).
☐	☐	☒	Typical open channel details with designation, location, shape, type, bottom width, top width, lining, slope, length, side slope, and installation depth required for construction. Channel design data as necessary may also be included.
☒	☐	☐	Outlet protections at all pipe outfalls.

Yes No N/A

☑ ☐ ☐ *STORMWATER CONVEYANCE SYSTEM COMPUTATIONS*

- ☑ ☐ ☐ Storm Sewer Design computations based on 10-year design event.
- ☑ ☐ ☐ Hydraulic Grade Line computations based on 10-year design event.
- ☑ ☐ ☐ Inlet computations based on current VDOT procedure for spread, ponding depth and grate size required.
- ☐ ☐ ☑ Culvert Headwater computations. Design based on 10-year design storm event and check only for 100-year storm event.
- ☐ ☐ ☑ Open Channel computations based on 2-year design event for velocity and 10-year design event for capacity.
- ☑ ☐ ☐ Standard outlet protection or special energy dissipators.
- ☐ ☐ ☑ Pipe thickness design computations, as required, for selected pipe type (live load, minimum cover, maximum height of cover, etc.).
- ☐ ☐ ☑ Adequate channel computations for receiving channels (based on field measured channel section data).

III. ***STORMWATER MANAGEMENT / BMP FACILITIES***:

Yes No N/A

☑ ☐ ☐ *HYDROLOGY* - An SCS based methodology is required for the design of stormwater management/BMP facilities with watersheds exceeding 20 acres. Under 20 acres, other generally accepted methodologies such as the modified rational, critical storm are allowable. Refer to Chapter 5 of the VESCH or Chapter 5 of the VSMH.

- ☑ ☐ ☐ Runoff Curve Number or Coefficient determinations: predeveloped and ultimate development land use scenarios.
- ☑ ☐ ☐ Time of concentration: predeveloped and ultimate development indicating overland, shallow concentrated, and channel flow components (200 ft. maximum length for overland flow).
- ☑ ☐ ☐ Hydrograph generation (tabular or graphical): pre- and postdevelopment conditions for the 1-, 2-, 10-, and 100-year design storm events.

☑ ☐ ☐ *FACILITY CONFIGURATION and MINIMUM SEPARATIONS*

- ☑ ☐ ☐ Screening and layout consistent with Section 24-98(d) of the Chapter 24 Zoning ordinance (landscaping, screening, visibility, etc.).
- ☑ ☐ ☐ Basic considerations for safety and unauthorized entry.
- ☑ ☐ ☐ Proper length to width ratio (Typically 2H:1V).
- ☐ ☐ ☑ Facilities with deep pools (4 feet or more in depth) provided with two benches. Fifteen (15) ft. safety bench outward from normal pool at maximum 6 percent slope and aquatic bench inward from normal shoreline below normal pool. Narrower widths may be considered on a case-by-case basis.
- ☑ ☐ ☐ Pond buffer minimum 25 feet outward from maximum design WSEL. Additional setbacks may be required to permanent structures.
- ☑ ☐ ☐ No trees, shrubs or woody plants within 15 feet of embankment toe or 25 feet from principal spillway structure.

Yes	No	N/A	
☐	☐	☑	Infiltration and filtering system facilities generally located at least 100 feet horizontally from any water supply well; 100 feet from any downslope building; and 25 feet from any upslope buildings, unless site specific investigation allows for reduced separation.

Yes	No	N/A	
☑	☐	☐	*HYDRAULIC COMPUTATIONS*
☑	☐	☐	Elevation- or Stage- Storage curve and/or tabular data.
☑	☐	☐	Weir / Orifice Control - Extended Detention.
☑	☐	☐	Weir / Orifice Control - riser 1-year control for channel protection.
☐	☐	☑	Weir / Orifice Control - riser 2-year control for quantity (if required).
☑	☐	☐	Weir / Orifice Control - riser 10-year control for quantity (if required).
☑	☐	☐	Inlet / Outlet (barrel) control - (All Storms).
☑	☐	☐	Check for barrel control prior to riser orifice flow to prevent slug flow-water hammer conditions.
☑	☐	☐	Emergency spillway capacity and depth of flow.
☑	☐	☐	Elevation - Discharge (Outlet Rating) curve and/or table. Provide all supporting calculations and/or design assumptions.
☐	☐	☑	Adequate channel computations for receiving channel. May be waived if facility is designed based on current Stream Channel Protection criteria.

☑	☐	☐	*POND or RESERVOIR ROUTING*
☑	☐	☐	Storage-Indication Routing of postdeveloped inflow hydrographs for the 1-, 2-, 10-, and 100-year design storms. Preference is for structure to discharge up to the 10-year storm through the principal spillway and pass the 100-year storm with a minimum 1 foot of freeboard through a combination principal and emergency spillways. If no emergency spillway is provided, riser must be large enough to pass the design high water flow and trash without overtopping the facility, have 3 square feet or more of cross-sectional area, contain a hood type inlet and have a minimum freeboard of 2 feet. Token spillways with minimum 8 ft. width are also recommended at or above the design 100-year storm elevation.
☐	☐	☑	Downstream hydrographs at established study points, if conditions warrant (ie. facility discharge combined with uncontrolled bypass).

☑	☐	☐	*MISCELLANEOUS COMPUTATIONS*
☐	☐	☑	Water quality volume for permanent pool based on selected BMP treatment volume (WQv).
☑	☐	☐	Water quality volume for extended detention based on selected BMP treatment volume (WQv) with drawdown computations.
☑	☐	☐	Drawdown computations for the 1-year, 24 hour detention for stream channel protection criteria.
☐	☐	☑	Pond drain computations (within 24 hours).
☑	☐	☐	Anti-seep collar design (concrete preferred) or match material type.
☐	☐	☑	Filter diaphragm design (or alternative method of controlling seepage).

Yes	No	N/A	
☑	☐	☐	Riser / base structure flotation analyses. FS = 1.25 minimum.
☐	☐	☑	Downstream danger reach study and/or emergency action plan (if conditions warrant).
☐	☐	☑	Upstream backwater analyses onto offsite adjacent property (if conditions warrant).
☐	☐	☑	100 year floodplain impacts (if conditions warrant).

Yes	No	N/A	
☐	☐	☑	*GEOTECHNICAL REQUIREMENTS*
☐	☐	☑	Geotechnical Report with recommendations specific to BMP facility type selected. Report prepared by a registered professional engineer. Requires submission, review and approval prior to issuance of Land Disturbance Permit.
☐	☐	☑	Initial Feasibility Testing requirements satisfied as per Appendix E of the James City County Guidelines for Design and Construction of Stormwater Management BMPs manual. (Infiltration, Bioretention and Filtering System BMP types only).
☐	☐	☑	Concept Design Testing requirements satisfied as per Appendix E of the James City County Guidelines for Design and Construction of Stormwater Management BMPs manual. (Infiltration, Bioretention and Filtering System BMP types only).
☐	☐	☑	Minimum Boring locations: borrow area, pool area, principal control structure, top of facility near one abutment and emergency spillway if provided.
☐	☐	☑	Boring logs with Unified Soil Classification (ASTM D2487), soils descriptions and depths to bedrock and the seasonal water table indicated.
☐	☐	☑	Standard County Record Drawing/Construction Certification note provided on plan. *Note: It is understood that preparation of record drawings and construction certifications as required for project facilities may not necessarily be performed by the plan preparer. These components may be performed by others.*
☐	☐	☑	*PRINCIPAL SPILLWAY PROFILE AND ASSOCIATED DETAILS*
☐	☐	☑	*EXISTING GROUND AND PROPOSED GRADE*
☐	☐	☑	Embankment or excavation side slopes labeled (3H:1V maximum).
☐	☐	☑	Minimum top width labeled (per VESCH or VSMH requirements).
☐	☐	☑	Removal of unsuitable material under proposed facility (per Geotechnical Report requirements).

Yes No N/A

☒ ☐ ☐ *CORE TRENCH*

- ☒ ☐ ☐ Material (per plan or Geotechnical Report).
- ☒ ☐ ☐ Bottom width (4' minimum or greater as dictated by Geotechnical Report recommendations).
- ☒ ☐ ☐ Side slopes (1:1 maximum steepness)
- ☒ ☐ ☐ Depth (4' minimum or greater as dictated by Geotechnical Report).

☒ ☐ ☐ *PRINCIPAL CONTROL STRUCTURE. RISER OR SIMILAR STRUCTURE (DETAILS REQUIRED FOR ALL ITEMS)*

- ☒ ☐ ☐ Durable, watertight, resistant material (concrete preferred).
- ☒ ☐ ☐ Riser diameter is at least 1.25 times larger than barrel diameter.
- ☒ ☐ ☐ All pertinent dimensions and elevations shown.
- ☒ ☐ ☐ Control orifice or weir dimensions and elevations shown.
- ☒ ☐ ☐ Trash rack - removable - for each release.
- ☒ ☐ ☐ Anti-vortex device, baffle or plate.
- ☒ ☐ ☐ Riser base structure with dimensions and embedment specifications (concrete preferred).
- ☒ ☐ ☐ Interior access (steps, ladders, etc.) for maintenance for structures over 4 feet in height. Excessively high risers may need some form of exterior access on top portion.
- ☒ ☐ ☐ Low flow orifice with trash rack device.

☒ ☐ ☐ *PRINCIPAL CONTROL STRUCTURE OUTLET BARREL*

- ☒ ☐ ☐ Material (ASTM C-361 reinforced concrete pipe) with watertight joints. Prior approval required for all other pipe material (other RCP types, CMP, CPP, PVC, etc.).
- ☒ ☐ ☐ Support and bedding requirements for barrel - concrete cradles, etc. or as recommended by the Geotechnical Report.
- ☒ ☐ ☐ Pipe inverts, length, size, class and slope shown.
- ☒ ☐ ☐ Flared end section or endwall provided on barrel outlet.

☐ ☐ ☒ *SEEPAGE CONTROL*

- ☐ ☐ ☒ Phreatic line shown (4:1 slope measured from the intersection of the embankment and the principal spillway design high water).

- ☒ ☐ ☐ *ANTI-SEEP COLLARS*
  - ☒ ☐ ☐ Anti-seep collar, concrete preferred.
  - ☒ ☐ ☐ Size - 15 percent increase in length of saturation using outside pipe diameter.
  - ☒ ☐ ☐ Spacing and location on barrel (located at least 2 feet from a pipe joint).

☐ ☐ ☒ *FILTER DIAPHRAGMS*

☐ ☐ ☒ Design based on latest NRCS design methods and certified by a professional engineer.

Yes No N/A

☒ ☐ ☐ *ELEVATION AND DIMENSIONAL DESIGN DATA*

- ☒ ☐ ☐ Top of facility - construction height and settled height (10 percent settlement).
- ☒ ☐ ☐ Crest of principal control structure spillway at least one (1) foot below crest of emergency spillway, if provided.
- ☒ ☐ ☐ Minimum freeboard of one (1) foot above the 100-year design high water elevation for facilities <u>with</u> an emergency spillway.
- ☐ ☐ ☒ Minimum freeboard of two (2) feet above the 100-year design high water elevation for facilities <u>without</u> an emergency spillway or in accordance with the SCS National Engineering Handbook (prior approval required).
- ☒ ☐ ☐ Basin Sediment Clean-Out elevation (permanent mode). Typically 10 to 25 percent of water quality volume.

☒ ☐ ☐ *CROSS SECTION THROUGH FACILITY*

- ☒ ☐ ☐ Existing Ground.
- ☒ ☐ ☐ Proposed grade.
- ☒ ☐ ☐ Top of facility - constructed and settled.
- ☒ ☐ ☐ Location of emergency spillway with side slopes labeled (emergency spillway in cut).
- ☒ ☐ ☐ Bottom of core trench (4' minimum).
- ☐ ☐ ☒ Location of each soil boring.
- ☒ ☐ ☐ Barrel location.
- ☒ ☐ ☐ Existing and proposed utility location/protection.

☒ ☐ ☐ *EMERGENCY SPILLWAY PROFILE*

- ☒ ☐ ☐ Existing ground.
- ☒ ☐ ☐ Inlet, level (control) and outlet sections per SCS.
- ☒ ☐ ☐ Spillway and crest elevations.

☒ ☐ ☐ *PRETREATMENT DEVICES* of adequate depth and properly designed using required pretreatment volumes for the selected County BMP facility type. Including, but not limited to: sediment forebays, sediment basins, sumps, grass channels, gravel diaphragms, plunge pools, chamber separators, manufactured systems or other acceptable methods.

Yes	No	N/A	
☒	☐	☐	*CONSTRUCTION SPECIFICATIONS and NOTES*
☒	☐	☐	Anticipated sequence of construction for BMP (consistent with erosion and sediment control plan).
☐	☐	☒	Provisions to control base stream or storm flow conditions encountered during construction.
☒	☐	☐	Site and subgrade preparation requirements.
☒	☐	☐	Embankment, fill and backfill material soil and placement (lift) thickness requirements.
☒	☐	☐	Compaction and soil moisture content requirements.
☐	☐	☒	Geosynthetics for drainage, filtration, moisture barrier, separation, and reinforcement purposes.
☐	☐	☒	Clay or synthetic (PVC or HDPE) pond liners.
☒	☐	☐	Storm drain, underdrain and pipe conduit requirements.
☒	☐	☐	Minimum depth of pipe cover for temporary (construction) and final cover conditions.
☐	☐	☒	Permanent shutoff valve and pond drain.
☒	☐	☐	Concrete requirements for structural components.
☒	☐	☐	Riprap and slope protection.
☒	☐	☐	Access or maintenance road surface, base, subbase.
☒	☐	☐	Temporary and permanent stabilization measures.
☐	☐	☒	Temporary or permanent safety fencing.
☐	☐	☒	BMP Landscaping (deep, shallow, fringe, perimeter,etc.)
☐	☐	☒	Dust and traffic control (if warranted).
☒	☐	☐	Construction monitoring and certification by professional.
☐	☐	☒	Other: _____
☐	☐	☒	Other: _____.
☒	☐	☐	*MAINTENANCE PROVISIONS*
☒	☐	☐	Entity responsible for maintenance identified..
☒	☐	☐	Maintenance Plan which outlines the long-term schedule for inspection/maintenance of the facility and forebays
☒	☐	☐	Maintenance access from public right-of-way or publicly traveled road.
☐	☐	☒	Maintenance easement provided encompassing high water pool and buffer, principal and emergency spillways, outlet structures, forebays, embankment area and possible sediment-removal stockpile areas.
☐	☐	☒	Minimum 6 foot wide public safety shelf (landing) or alternative fencing.

IV. *OUTLET PROTECTIONS:*

Yes	No	N/A	
☐	☐	☐	Sized for maximum design release (generally 10-year storm).
☐	☐	☐	Flared end section or endwall.
☐	☐	☐	Dimensions.
☐	☐	☐	Rock or riprap size, quantity and placement thickness.
☐	☐	☐	Slope at 0 percent (Level Grade).
☐	☐	☐	Geotextiles (nonwoven).
☐	☐	☐	Special energy dissipators are required for design discharge velocities that exceed eighteen (18) feet per second; or if use of standard outlet protection would result in velocities exceeding permissible channel velocities; or if space restricts or limits their use.

V. *ADDITIONAL COMMENTS OR INFORMATION SPECIFIC TO THE PLAN:*

Plan Preparer: Kenneth Jenkins

Date: 3/31/09

SWMProg/BMP/Checklist/ChkList

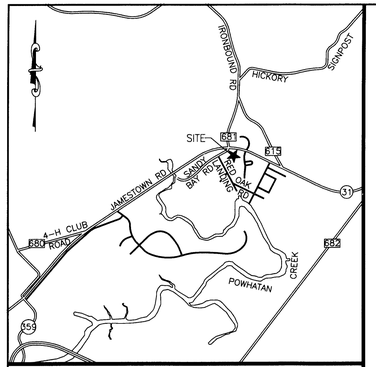

VICINITY MAP
N.T.S.

DRAINAGE AS-BUILTS
FOR
MEDITERRANEAN RESTAURANT
JAMES CITY COUNTY, VIRGINIA

RECEIVED
DEC 21 2010
Environmental Division

PERMANENT SEDIMENT FOREBAY

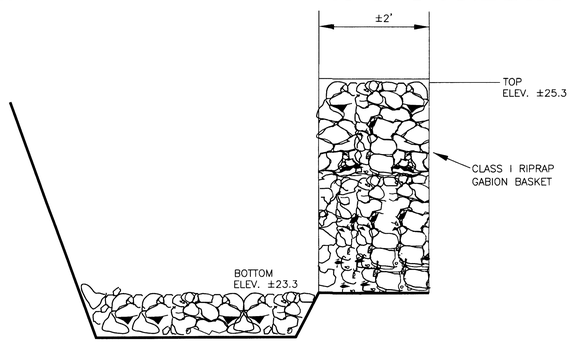

CROSS SECTION OF OUTLET
(SHOWN PER APPROVED SITE PLAN)

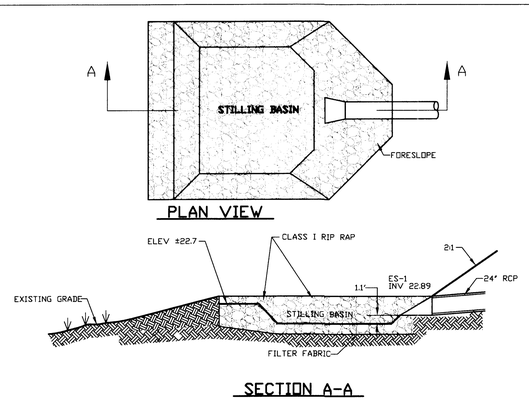

BMP OUTFALL RIP-RAP STILLING BASIN
(SHOWN PER APPROVED SITE PLAN)

DRY POND MAINTENANCE AND INSPECTION PROGRAM
(SHOWN PER APPROVED SITE PLAN)

RESPONSIBILITY:

IT IS THE OWNERS RESPONSIBILITY TO IMPLEMENT THIS MAINTENANCE & INSPECTION SCHEDULE.

INSPECTION SCHEDULE:

AFTER THE DRY POND IS FIRST MADE FUNCTIONAL IT SHALL BE INSPECTED MONTHLY AND AFTER ANY LARGE STORM EVENTS. THEREAFTER, ONCE THE FACILITY IS DEEMED FUNCTIONING PROPERLY AND WITHOUT POTENTIAL SEDIMENT PROBLEMS, INSPECTIONS SHALL BE CONDUCTED SEMI-ANNUALLY AND AFTER ANY LARGE STORM EVENTS. ALL INSPECTIONS SHALL INCLUDE INVESTIGATION FOR POTENTIAL SOURCES OF CONTAMINATION.

DEBRIS AND LITTER REMOVAL:

TRASH WILL COLLECT IN THE DRY POND. TRASH, DEBRIS, LITTER, ETC. SHALL BE REMOVED AT THE SAME TIME THAT THE MONTHLY MOWINGS ARE CONDUCTED.

SEDIMENT REMOVAL

SINCE THE INLET TO THE DRY POND HAS A SEDIMENT FOREBAY, THERE SHOULD BE MINIMAL SEDIMENT BUILDUP IN THE ACTUAL DRY POND. THE SEDIMENT FOREBAY SHALL BE CLEANED OUT (SEDIMENT REMOVED) ONCE HALF THE FOREBAY VOLUME (ELEV 24.5) HAS BEEN FILLED WITH SEDIMENT.

EROSION CONTROL:

THIS IS A VERY IMPORTANT MAINTENANCE TASK SINCE ERODED SEDIMENTS ADVERSELY AFFECT THE STORAGE CAPACITY OF THE FACILITY. DURING THE SEMI-ANNUAL INSPECTIONS, THE FACILITY SHOULD BE CHECKED FOR EXCESSIVE SEDIMENT ACCUMULATION. IF SEDIMENT IS FOUND IN THE FACILITY IT SHOULD BE TRACED BACK TO A FULL SEDIMENT FOREBAY OR INADEQUATELY PROTECTED SITE UPSTREAM. IN EITHER CASE, THE PROBLEM SHALL BE RESOLVED IMMEDIATELY IN ORDER TO PREVENT FURTHER CONTAMINATION OF THE INFILTRATION FACILITY.

VEGETATION MAINTENANCE:

MAINTENANCE OF THE VEGETATION ON THE FACILITY FLOOR AND SIDE SLOPES IS NECESSARY TO PROMOTE A DENSE TURF WITH EXTENSIVE ROOT GROWTH, PREVENTS EROSION AND SEDIMENTATION, AND DETERS INVASIVE WEED GROWTH. BARE SPOTS SHOULD BE IMMEDIATELY STABILIZED AND REVEGETATED. MOWING SHOULD BE BE DONE ONCE A MONTH AT A MINIMUM, WITH CLIPPINGS BAGGED.

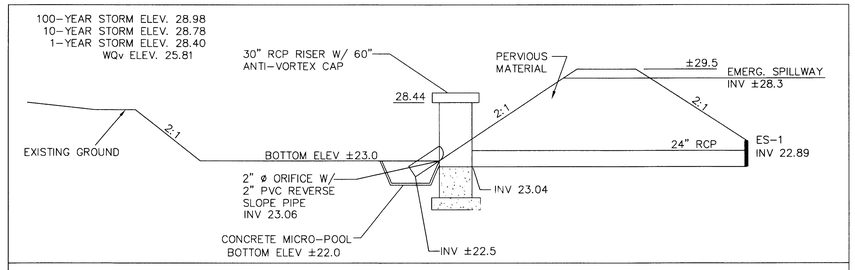

DRY POND DETAIL
(SHOWN PER APPROVED SITE PLAN)

NOTES:

1) THE INFORMATION SHOWN ON THIS AS-BUILT WAS TAKEN FROM FIELD SURVEY COMPLETED 04-29-10.
2) PROPERTY LINES ARE SHOWN PER APPROVED SITE PLAN.
3) ELEVATIONS SHOWN ARE RELATIVE TO SITE PLAN.
4) ALL CURB & OTHER IMPROVEMENTS SHOWN ARE PROPOSED OR UNDER CONSTRUCTION
5) (D) = DESIGN INFORMATION / (A) = AS-BUILT INFORMATION

RECORD DRAWING CERTIFICATION

I HEREBY CERTIFY TO THE BEST OF MY KNOWLEDGE AND BELIEF THAT THIS RECORD DRAWING REPRESENTS THE ACTUAL CONDITION OF THE STORM WATER MANAGEMENT/BMP FACILITY. THE FACILITY APPEARS TO CONFORM WITH THE PROVISIONS OF THE APPROVED DESIGN PLAN, SPECIFICATIONS AND STORM WATER MANAGEMENT PLAN, EXCEPT AS SPECIFICALLY NOTED.

12/21/2010
MATTHEW H. CONNOLLY, L.S. DATE

RECORD DRAWING
COUNTY PLAN # JCC SP-0036-2009

DRAINAGE AS-BUILTS
FOR
MEDITERRANEAN RESTAURANT
JAMES CITY COUNTY,

NO.	DATE	REVISION / COMMENT / NOTE
1	12/21/10	PER COUNTY COMMENTS DATED 5/25/2010

COMMONWEALTH OF VIRGINIA
MATTHEW H. CONNOLLY
Lic. No. 2053
12/21/10
LAND SURVEYOR

LandTech Resources, Inc.
Surveying • GPS • Engineering
205 Bulifants Blvd., Ste. E, Williamsburg, VA 23188
Phone: (757) 565-1677 Fax: (757) 565-0782
web: landtechresources.com

SCALE: 1" = 20'
DATE: 05-07-2010
JOB: 08-230
DRAWN BY: DMS
SHEET: 1 OF 2

RECORD DRAWING CERTIFICATION

I HEREBY CERTIFY TO THE BEST OF MY KNOWLEDGE AND BELIEF THAT THIS RECORD DRAWING REPRESENTS THE ACTUAL CONDITION OF THE STORM WATER MANAGEMENT/BMP FACILITY. THE FACILITY APPEARS TO CONFORM WITH THE PROVISIONS OF THE APPROVED DESIGN PLAN, SPECIFICATIONS AND STORM WATER MANAGEMENT PLAN, EXCEPT AS SPECIFICALLY NOTED.

12-21-2010

MATTHEW H. CONNOLLY, L.S. DATE

DRAINAGE AS-BUILTS
FOR
MEDITERRANEAN RESTAURANT

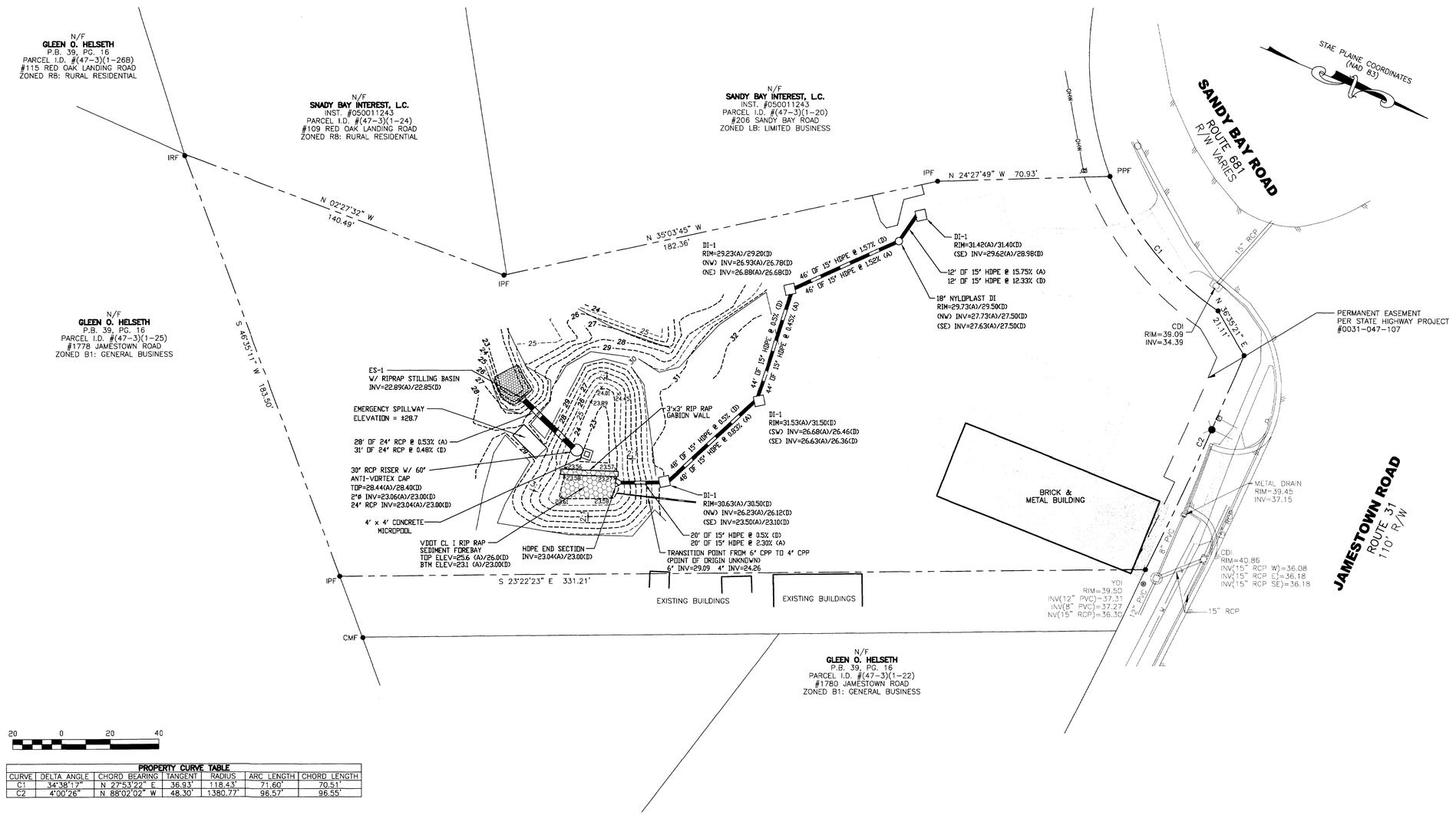

PROPERTY CURVE TABLE

CURVE	DELTA ANGLE	CHORD BEARING	TANGENT	RADIUS	ARC LENGTH	CHORD LENGTH
C1	34°38'17"	N 27°53'22" E	36.93'	118.43'	71.60'	70.51
C2	4°00'26"	N 88°02'02" W	48.30'	1380.77'	96.57'	96.55'

DRAINAGE AS-BUILTS
FOR
MEDITERRANEAN RESTAURANT
JAMES CITY COUNTY, Virginia

NO.	DATE	REVISION / COMMENT / NOTE
1	12/21/10	PER COUNTY COMMENTS DATED 5/25/2010

COMMONWEALTH OF VIRGINIA
MATTHEW H. CONNOLLY
Lic. No. 2059
12/21/10
LAND SURVEYOR

LandTech Resources, Inc.
Surveying • GPS • Engineering
205 Bulifants Blvd., Ste. E, Williamsburg, VA 23188
Phone: (757) 565-1677 Fax: (757) 565-0782
web: landtechresources.com

SCALE: 1" = 20'
DATE: 04-29-2010
JOB: 08-230
DRAWN BY: DMS
SHEET: 2 OF 2

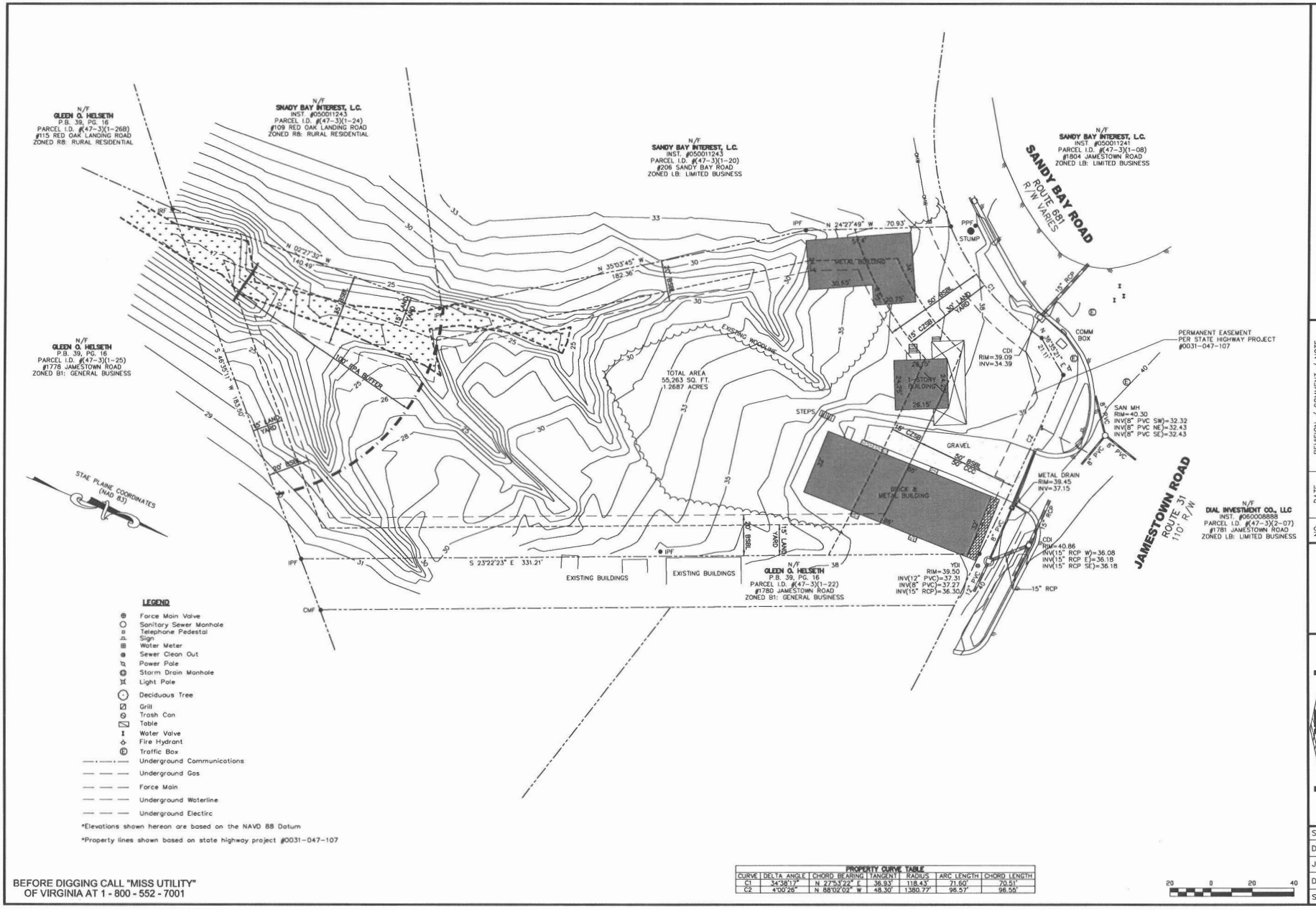

PROPERTY CURVE TABLE

CURVE	DELTA ANGLE	CHORD BEARING	TANGENT	RADIUS	ARC LENGTH	CHORD LENGTH
C1	34°38'17"	N 27°53'22" E	36.93'	118.43'	71.60'	70.51'
C2	4°00'26"	N 88°02'02" W	48.30'	1380.77'	96.57'	96.55'

CONCEPTUAL SITE PLAN FOR RESTAURANT SITE

1784 JAMESTOWN ROAD – PARCEL ID: 4730100021

EXISTING CONDITIONS

James City County Virginia

NO.	DATE	REVISION / COMMENT / NOTE

LandTech Resources, Inc.
Surveying • GIS • Engineering
205 Bulifants Blvd., Ste. B, Williamsburg, VA 23188
Phone: (757) 565-1677 Fax: (757) 565-0782
web: landtechresources.com

SCALE: 1" = 20'

DATE: 8/22/08

JOB: 08-230

DRAWN BY: KMJ

SHEET: P1 OF 1

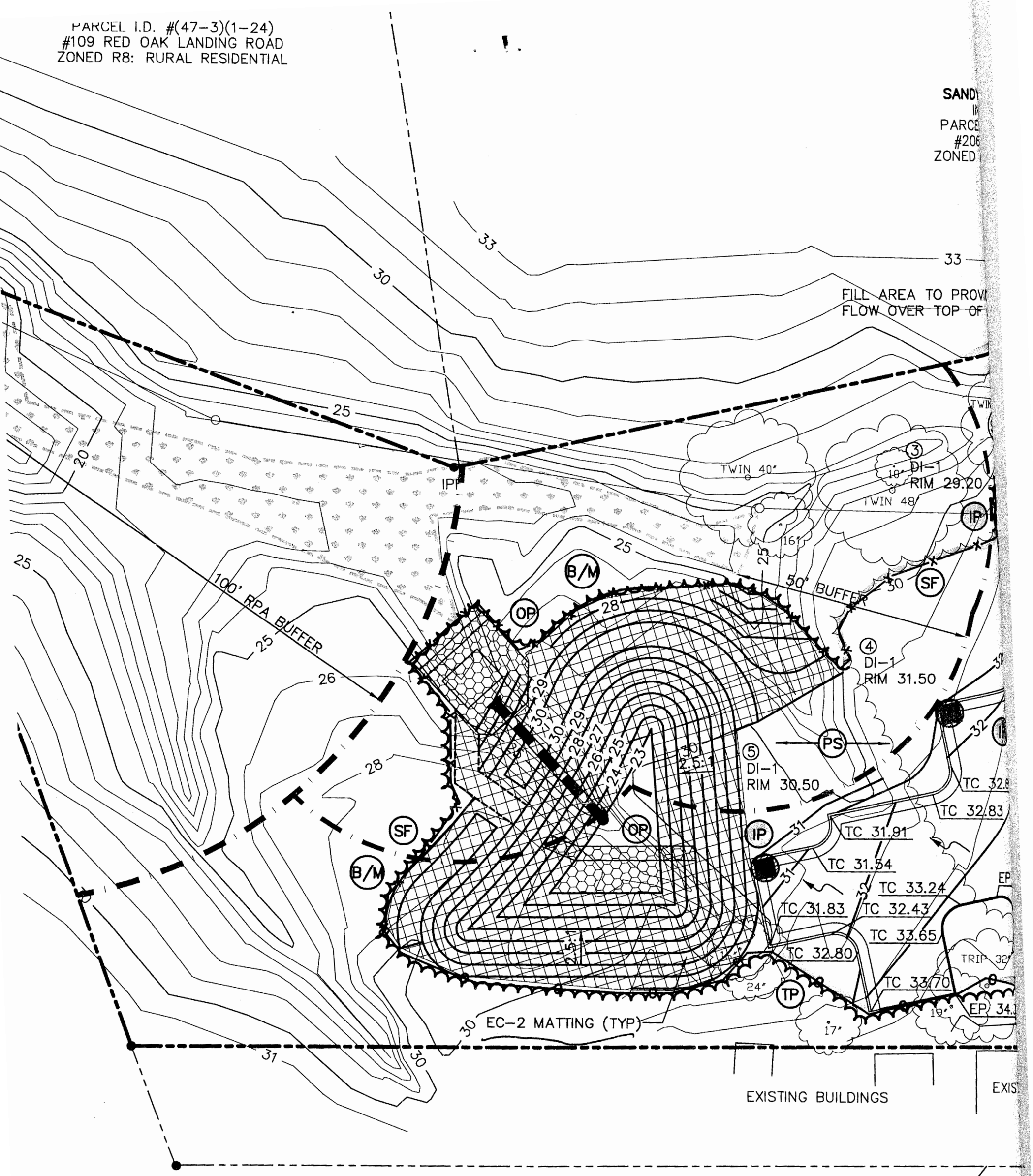

PROPOSED SEQUENCE OF CONSTRUCTION

1) SCHEDULE PRECONSTRUCTION CONFERENCE WITH JCC ENVIRONMENTAL DIVISION.
2) INSTALL CONSTRUCTION ENTRANCE, SILT FENCE, DIVERSION DIKE, SEDIMENT BASIN INLET PROTECTION, CHECK DAM AND TREE PROTECTION.
3) REMOVE EXISTING FEATURES PER DEMOLITION PLAN ON SHEET C2.
4) ROUGH GRADE PARKING LOT. APPLY TOPSOIL AND FINAL STABILIZATION TO ALL DISTURBED AREAS EXCLUDING PARKING LOT.
5) INSTALL STORM SEWER SYSTEM.
6) INSTALL GRAVEL BASE TO PARKING LOT AND DRIVE AISLES.
7) CONSTRUCT BUILDING ADDITIONS AND SIDEWALKS.
8) INSTALL ASPHALT TO ENTRANCE, AISLES AND PARKING SPACES.
9) CONSTRUCT FINAL BMP CONFIGURATION.
10) REMOVE ALL TEMPOTRARY E & S MEASURES ONCE ALL DISTURBED AREAS ASSOCIATED WITH THE PROJECT ARE STABILIZED AND AFTER RECEIVING APPROVAL TO DO SO BY THE JAMES CITY COUNTY ENVIRONMENTAL DIVISION.

MAINTENANCE

IN GENERAL, ALL ER
AND AFTER SIGNIFICA

1. THE SILT FENCE
2. THE GRAVEL INLE WILL PREVENT DI AND CLEANED O
3. THE SEEDED AREA MAINTAINED. AR

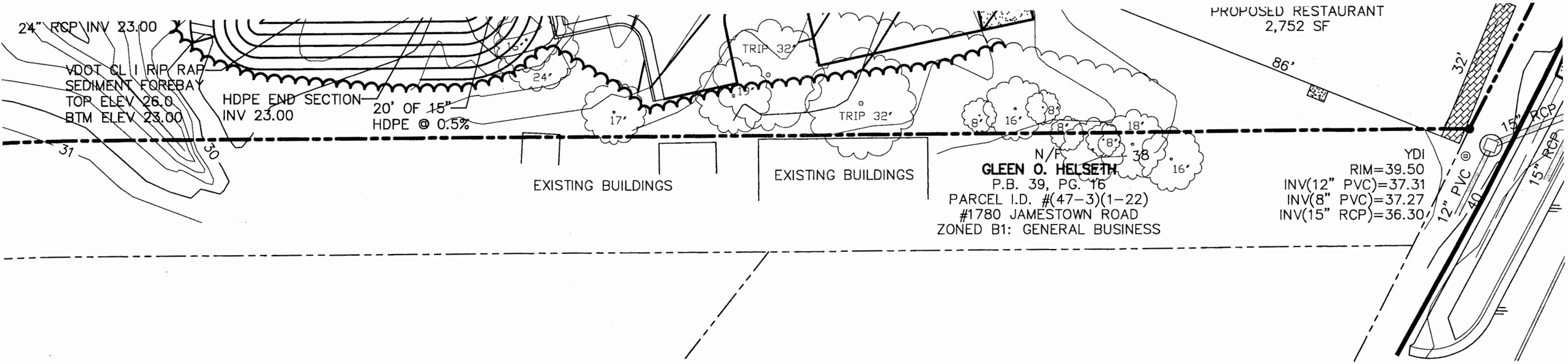

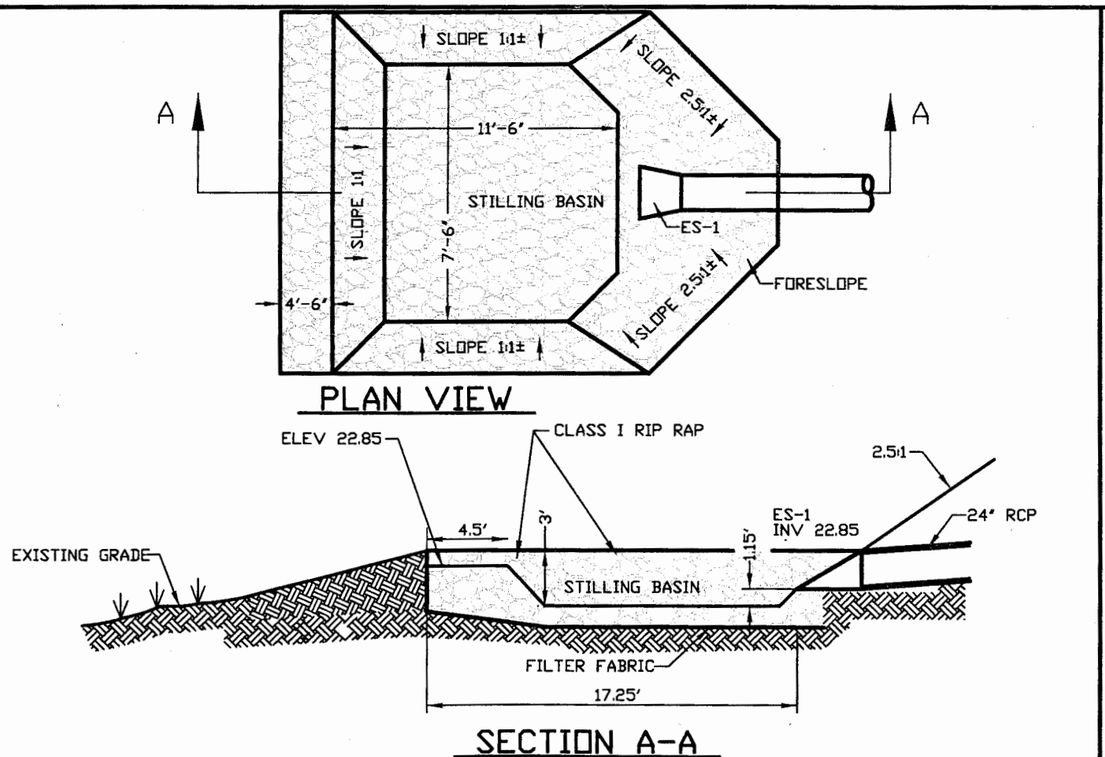

NOTE: RIP RAP BOTTOM AND SIDES TO BE A MINIMUM 26" THICK. FORESLOPE RIP RAP TO BE A MINIMUM 39" THICK.

NOT TO SCALE

BMP OUTFALL RIP-RAP STILLING BASIN

PERMANENT SEDIMENT FOREBAY

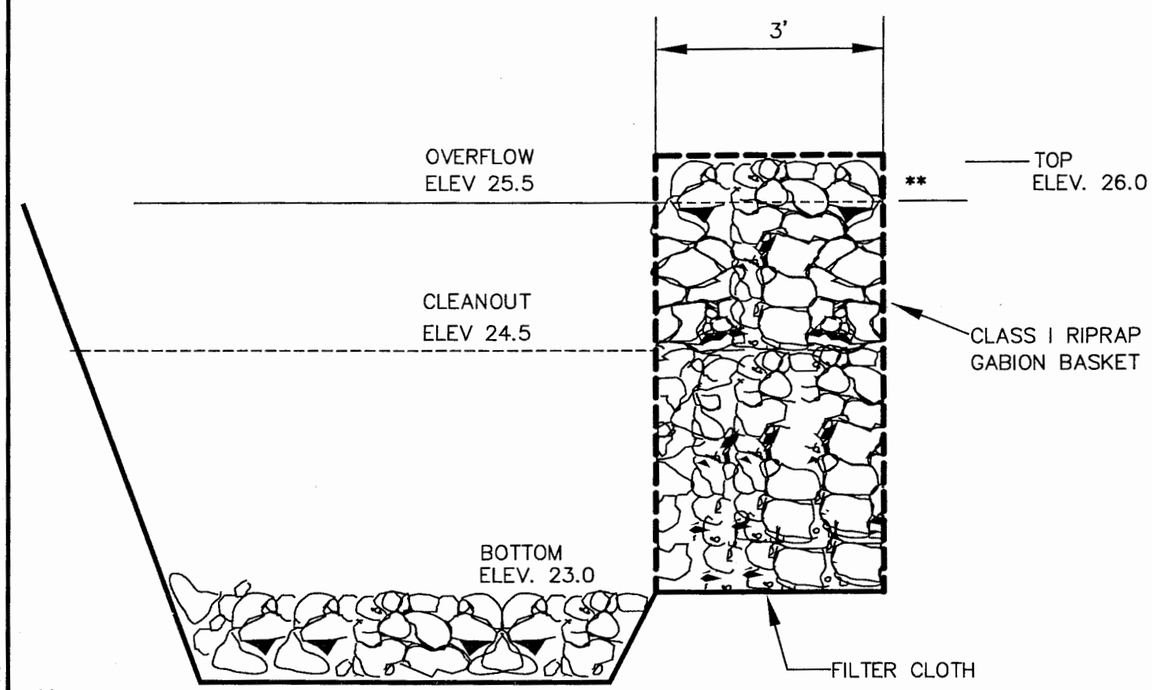

**FOREBAY SHALL HAVE A 3' WIDE OVERFLOW 6" BELOW THE TOP OF FOREBAY ELEVATION.

CROSS SECTION OF OUTLET

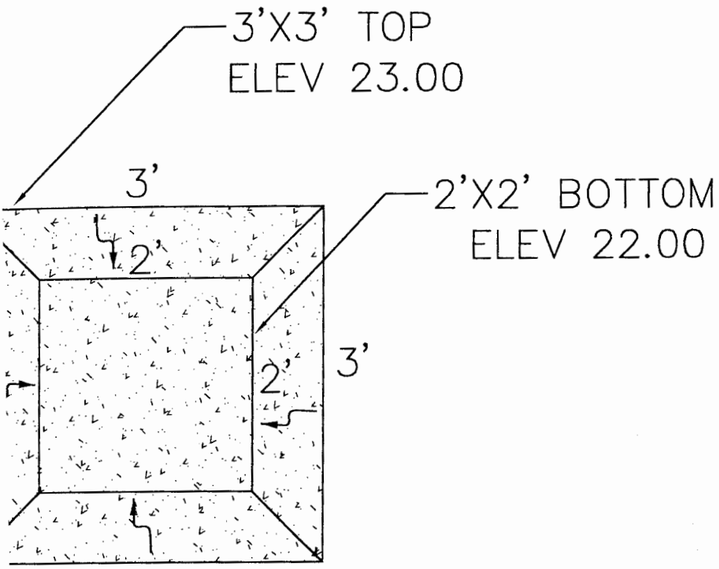

TO BE 4" THICK, 3000 PSI.

RETE MICRO-POOL DETAIL

DRY POND MAINTENANCE AND INSPECTION PROGRAM

RESPONSIBILTY:
IT IS THE OWNERS RESPONSIBILTY TO IMPLEMENT THIS MAINTENANCE & INSPECTION SCHEDULE.

INSPECTION SCHEDULE:
AFTER THE DRY POND IS FIRST MADE FUNCTIONAL IT SHALL BE INSPECTED MONTHLY AND AFTER ANY LARGE STORM EVENTS. THEREAFTER, ONCE THE FACILITY IS DEEMED FUNCTIONING PROPERLY AND WITHOUT POTENTIAL SEDIMENT PROBLEMS, INSPECTIONS SHALL BE CONDUCTED SEMI-ANNUALLY AND AFTER ANY LARGE STORM EVENTS. ALL INSPECTIONS SHALL INCLUDE INVESTIGATION FOR POTENTIAL SOURCES OF CONTAMINATION.

DEBRIS AND LITTER REMOVAL:
TRASH WILL COLLECT IN THE DRY POND. TRASH, DEBRIS, LITTER, ETC. SHALL BE REMOVED AT THE SAME TIME THAT THE MONTHLY MOWINGS ARE CONDUCTED.

SEDIMENT REMOVAL
SINCE THE INLET TO THE DRY POND HAS A SEDIMENT FOREBAY, THERE SHOULD BE MINIMAL SEDIMENT BUILDUP IN THE ACTUAL DRY POND. THE SEDIMENT FOREBAY SHALL BE CLEANED OUT (SEDIMENT REMOVED) ONCE HALF THE FOREBAY VOLUME (ELEV 24.5) HAS BEEN FILLED WITH SEDIMENT.

EROSION CONTROL:
THIS IS A VERY IMPORTANT MAINTENANCE TASK SINCE ERODED SEDIMENTS ADVERSELY AFFECT THE STORAGE CAPACITY OF THE FACAILITY. DURING THE SEMI-ANNUAL INSPECTIONS, THE FACILITY SHOULD BE CHECKED FOR EXCESSIVE SEDIMENT ACCUMULATION. IF SEDIMENT IS FOUND IN THE FACILITY IT SHOULD BE TRACED BACK TO A FULL SEDIMENT FOREBAY OR INADEQUATELY PROTECTED SITE UPSTREAM. IN EITHER CASE, THE PROBLEM SHALL BE RESOLVED IMMEDIATELY IN ORDER TO PREVENT FURTHER CONTAMINATION OF THE INFILTRATION FACILITY.

VEGETATION MAINTENANCE:
MAINTENANCE OF THE VEGETATION ON THE FACILITY FLOOR AND SIDE SLOPES IS NECESSARY TO PROMOTE A DENSE TURF WITH EXTENSIVE ROOT GROWTH, PREVENTS EROSION AND SEDIMENTATION, AND DETERS INVASIVE WEED GROWTH. BARE SPOTS SHOULD BE IMMEDIATELY STABILIZED AND REVEGETATED. MOWING SHOULD BE BE DONE ONCE A MONTH AT A MINIMUM, WITH CLIPPINGS BAGGED.

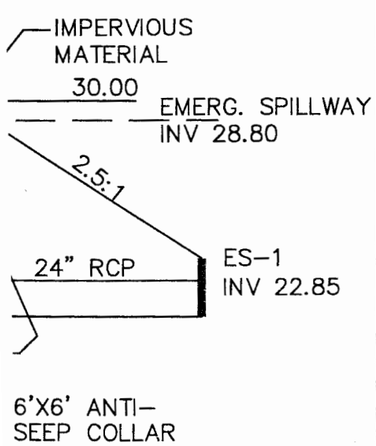

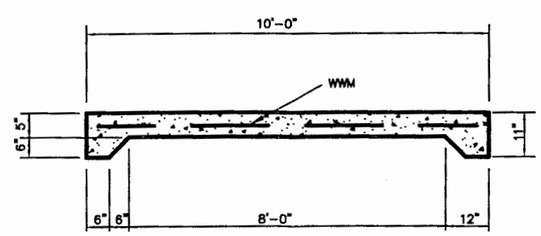

SECTION B-B

SITE PLAN OF
MEDITERRANEAN RESTAURANT
1784 JAMESTOWN ROAD - PARCEL ID: 4730100021
DETAIL SHEET

James City County

Virginia

COMMENT / NOTE
C LTR DTD 5/8/09

PC251_MEDITERRANEAN_RESTAURANT - 040

NOTES:

TH (H) TO BE 10'. FOR GREATER DEPTH USE -1A.

ED ON PLANS THE INVERT IS TO BE SHAPED CE WITH STANDARD PLAN IS-1. THE COST OF ND PLACING ALL MATERIALS INCIDENTAL TO THE O BE INCLUDED IN THE PRICE BID FOR THE DROP TE.

Y BE PRECAST OR CAST IN PLACE.

PLACE CONCRETE TO BE CLASS A3. FOR PRECAST 03.03.

NSION SHOWN ON THE STANDARDS AND SPECIFIED S WILL BE MEASURED FROM THE INVERT OF THE OUT- THE TOP OF THE STRUCTURE. PLAN "H" DIMENSIONS MATE ONLY FOR ESTIMATING PURPOSES AND THE ISIONS SHALL BE DETERMINED BY THE CONTRACTOR LD CONDITIONS.

THE INVERT OF THE OUTFALL PIPE IS HIGHER THAN OF THE STRUCTURE, THE INVERT OF THE STRUCTURE PED WITH CEMENT MORTAR TO PREVENT STANDING OF WATER IN THE STRUCTURE. THE COST FOR NG SHALL BE INCLUDED IN THE PRICE BID FOR E.

NOTES:

ANY ALTERNATE METHODS OF ANCHORAGE MEETING THE APPROVAL OF THE ENGINEER, MAY BE SUBSTITUTED FOR THE CAST IRON LUGS AS SHOWN HEREON.

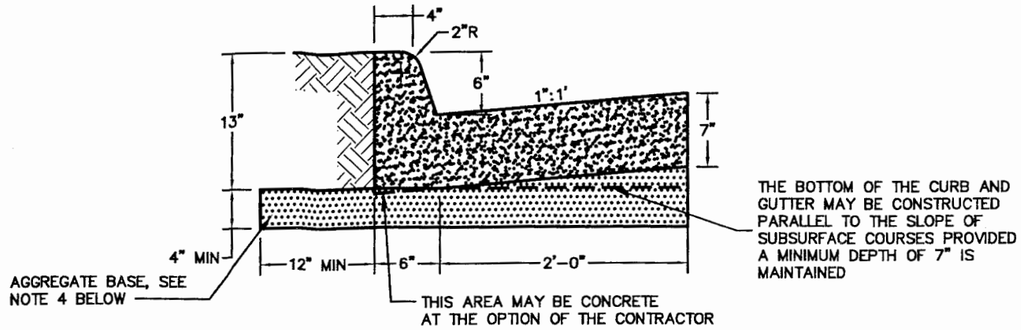

THIS CURB IS TO BE USED WHEN DESIGN SPEED 40 MPH OR LESS ON RURAL HIGHWAYS AND 45 OR LESS IN DEVELOPED URBAN AND SUBURBAN AREAS.

NOTES:

1. CURB & GUTTER HAVING A RADIUS OF 300 FT. OR LESS (ALONG FACE OF CURB) SHALL BE PAID FOR A RADIAL CURB COMBINATION CURB & GUTTER.

2. THIS ITEM MAY BE PRECAST OR CAST IN PLACE.

3. CONCRETE TO BE CLASS A3 IF CAST IN PLACE, 4,000 PSI IF PRECAST.

4. ALL CURB SHALL HAVE A MINIMUM OF 4" AGGREGATE BASE MATERIAL UNDER THE CURB AND THE AGGREGATE SHALL EXTEND ONE (1') FOOT BEYOND THE BACK OF THE CURB. THE SUBGRADE SHALL BE PROOF-ROLLED PRIOR TO THE PLACEMENT OF THE AGGREGATE. ANY YIELDING AREAS WILL BE UNDERCUT AND STABILIZED BY APPROVED METHOD OF THE VDOT SPECIFICATIONS AND STANDARDS AS RECOMMENDED BY THE GEOTECHNICAL ENGINEER AND ACCEPTED BY THE VDOT REPRESENTATIVE.

STANDARD 6" CURB & GUTTER

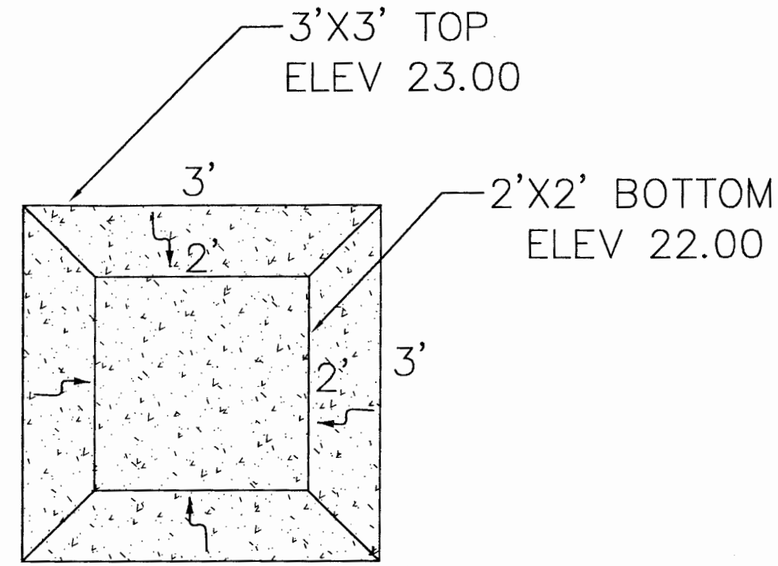

1. CONCRETE TO BE 4" THICK, 3000 PSI.

CONCRETE MICRO-POOL DETAIL

10'

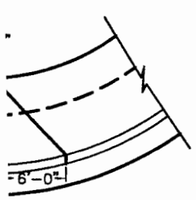

AN

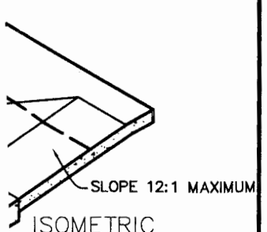

ISOMETRIC VIEW

and cross slope of the ramp

is or as directed by the ks but should not be located ts, drop inlets, etc. will also

t unit prices for sidewalk, curb all include all work

the curb and gutter configuration.

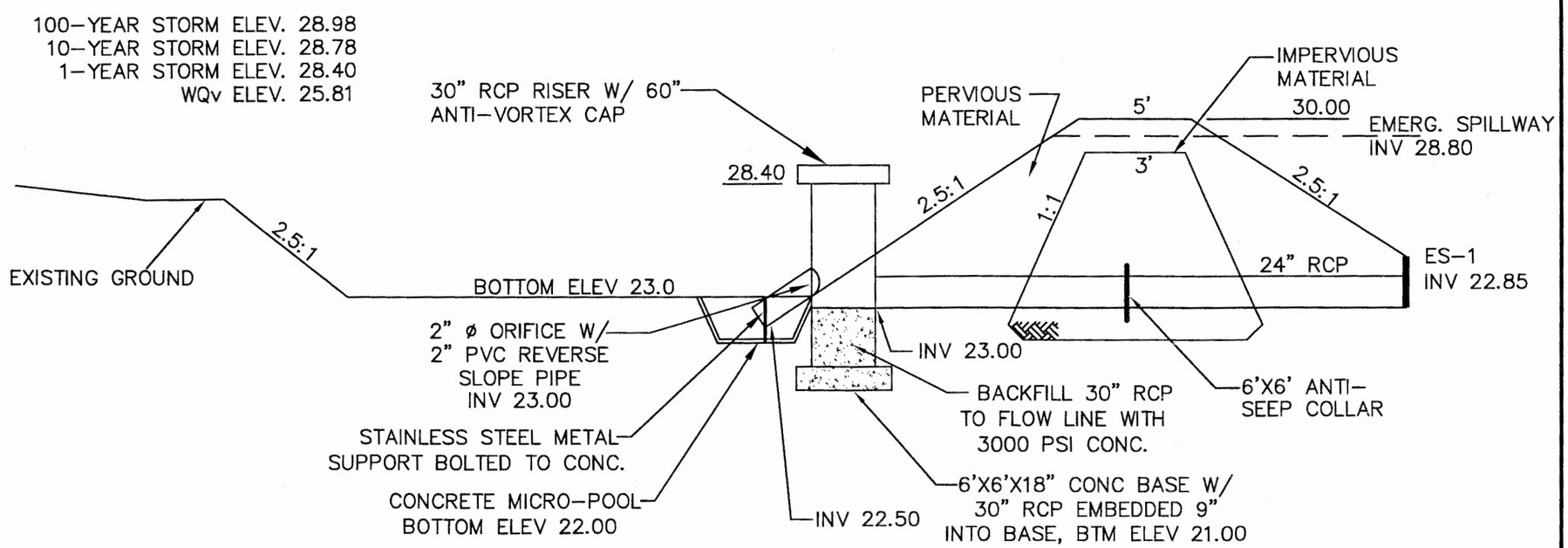

1. THE CONTRACTOR SHALL PLACE FILL MATERIAL IN 6" TO 8" LIFTS AND COMPACT TO 95% MAXIMUM DRY DENSITY AT 95% OPTIMUM MOISTURE CONTENT.
2. THE CONTRACTOR SHALL PROVIDE FILL MATERIAL FREE OF ORGANICS, STUMPS, ROOTS AND OTHER DELETERIOUS MATERIAL
3. THE REMOVAL OF UNSUITABLE MATERIAL UNDER

N A–A

ALL CAST IN PLACE CONCRETE TO BE CLASS A3. FOR PRECAST SEE SHEET 103.03.

THE "H" DIMENSION SHOWN ON THE STANDARDS AND SPECIFIED ON THE PLANS WILL BE MEASURED FROM THE INVERT OF THE OUTFALL PIPE TO THE TOP OF THE STRUCTURE. PLAN "H" DIMENSIONS ARE APPROXIMATE ONLY FOR ESTIMATING PURPOSES AND THE ACTUAL DIMENSIONS SHALL BE DETERMINED BY THE CONTRACTOR FROM THE FIELD CONDITIONS.

IN THE EVENT THE INVERT OF THE OUTFALL PIPE IS HIGHER THAN THE BOTTOM OF THE STRUCTURE, THE INVERT OF THE STRUCTURE SHALL BE SHAPED WITH CEMENT MORTAR TO PREVENT STANDING OR PONDING OF WATER IN THE STRUCTURE. THE COST FOR INVERT SHAPING SHALL BE INCLUDED IN THE PRICE BID FOR THE STRUCTURE.

ITIES FOR MINIMUM DEPTH
- 1.440 CU. YDS. CONCRETE
- 1.528 CU. YDS. CONCRETE
- 1.620 CU. YDS. CONCRETE
- 1.817 CU. YDS. CONCRETE

PE ADDITIONAL FOOT OF DEPTH.

NOTES:

ANY ALTERNATE METHODS OF ANCHORAGE MEETING THE APPROVAL OF THE ENGINEER, MAY BE SUBSTITUTED FOR THE CAST IRON LUGS AS SHOWN HEREON.

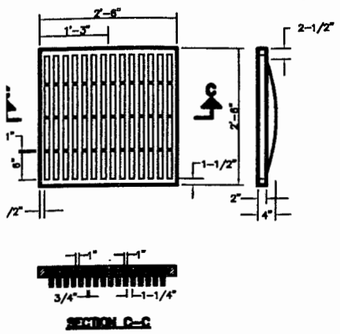

ROP INLET
JM DEPTH (H) = 10'

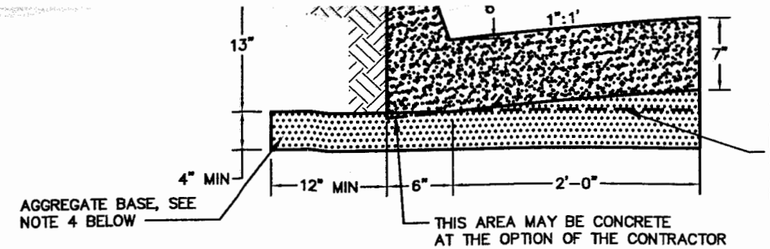

THE BOTTOM OF THE CURB AND GUTTER MAY BE CONSTRUCTED PARALLEL TO THE SLOPE OF SUBSURFACE COURSES PROVIDED A MINIMUM DEPTH OF 7" IS MAINTAINED

THIS CURB IS TO BE USED WHEN DESIGN SPEED 40 MPH OR LESS ON RURAL HIGHWAYS AND 45 OR LESS IN DEVELOPED URBAN AND SUBURBAN AREAS.

NOTES:

1. CURB & GUTTER HAVING A RADIUS OF 300 FT. OR LESS (ALONG FACE OF CURB) SHALL BE PAID FOR A RADIAL CURB COMBINATION CURB & GUTTER.
2. THIS ITEM MAY BE PRECAST OR CAST IN PLACE.
3. CONCRETE TO BE CLASS A3 IF CAST IN PLACE, 4,000 PSI IF PRECAST.
4. ALL CURB SHALL HAVE A MINIMUM OF 4" AGGREGATE BASE MATERIAL UNDER THE CURB AND THE AGGREGATE SHALL EXTEND ONE (1') FOOT BEYOND THE BACK OF THE CURB. THE SUBGRADE SHALL BE PROOF–ROLLED PRIOR TO THE PLACEMENT OF THE AGGREGATE. ANY YIELDING AREAS WILL BE UNDERCUT AND STABILIZED BY APPROVED METHOD OF THE VDOT SPECIFICATIONS AND STANDARDS AS RECOMMENDED BY THE GEOTECHNICAL ENGINEER AND ACCEPTED BY THE VDOT REPRESENTATIVE.

STANDARD 6" CURB & GUTTER

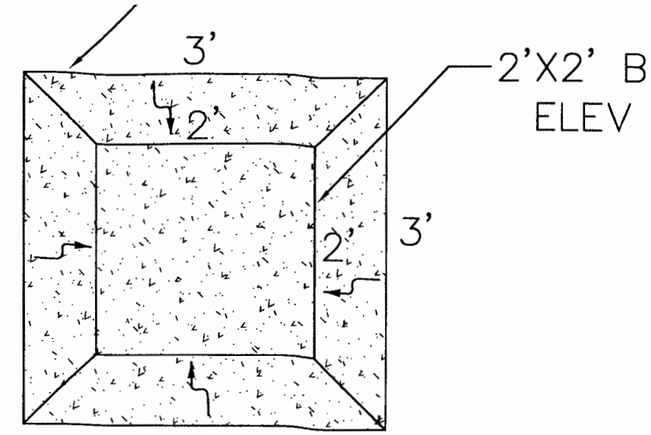

1. CONCRETE TO BE 4" THICK, 3000 PSI.

CONCRETE MICRO–POOL DE

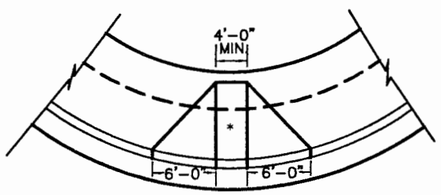

RADIAL PLAN

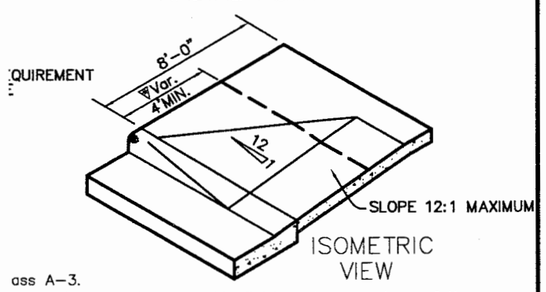

ass A–3.
e constructed with non–skid finish and cross slope of the ramp 4"/foot.
ed a maximum slope of 12:1.
to be located as shown on the plans or as directed by the be offset from pedestrian crosswalks but should not be located nes. Existing light poles, fire hydrants, drop inlets, etc. will also

easured and paid for at the contract unit prices for sidewalk, curb components there of which price shall include all work r modify the items as required.
tion with Standard CG–3 or CG–7, the curb face on this justed to match the mountable curb configuration.
4" width is not obtainable.

T RAMP
LLY HANDICAPPED)

100–YEAR STORM ELEV. 28.98
10–YEAR STORM ELEV. 28.78
1–YEAR STORM ELEV. 28.40
WQv ELEV. 25.81

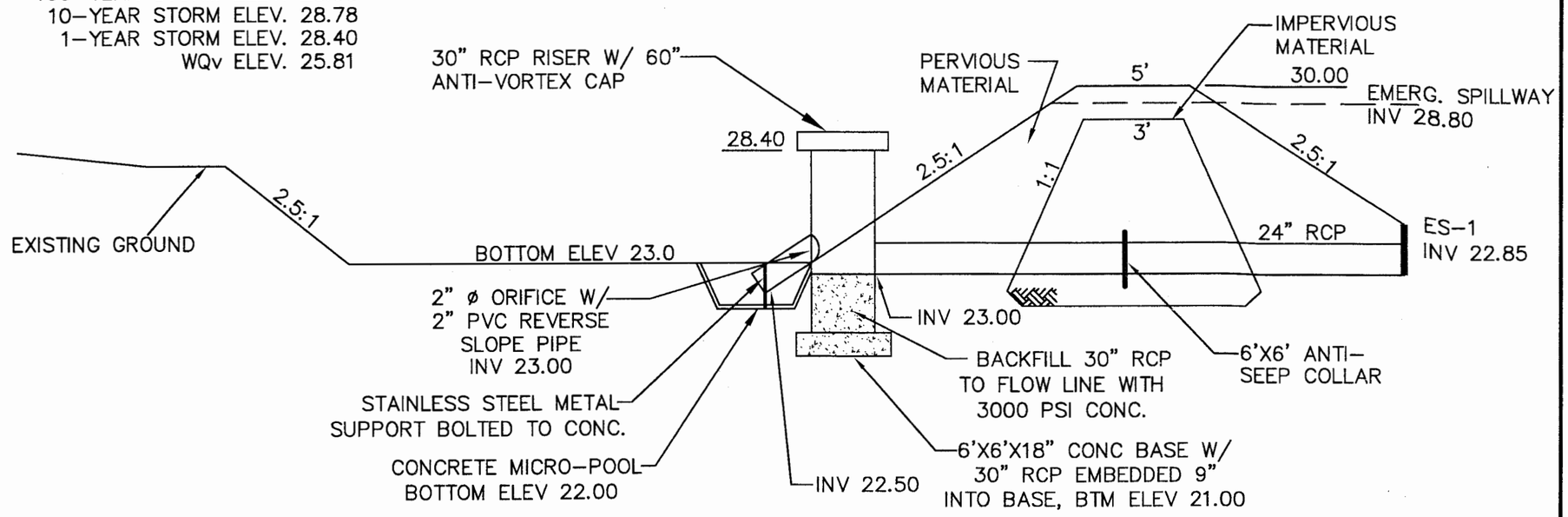

1. THE CONTRACTOR SHALL PLACE FILL MATERIAL IN 6" TO 8" LIFTS AND COMPACT TO 95% MAXIMUM DRY DENSITY AT 95% OPTIMUM MOISTURE CONTENT.
2. THE CONTRACTOR SHALL PROVIDE FILL MATERIAL FREE OF ORGANICS, STUMPS, ROOTS AND OTHER DELETERIOUS MATERIAL.
3. THE REMOVAL OF UNSUITABLE MATERIAL UNDER THE EMBANKMENT SHALL BE COMPLETED UNDER THE SUPERVISION OF A GEOTECHNICAL ENGINEER.
4. CONSTRUCTION OF THE IMPERVIOUS MATERIAL EARTHEN EMBANKMENT SHALL BE COMPLETED UNDER THE SUPERVISION OF A GEOTECHNICAL ENGINEER.

DRY POND DETAIL

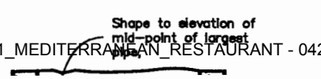

END–SECTION 12"–60" PIPE

ALTERNATE END–SECTION 12"–48" PIPE

NO PROJECTION OF PIPE ABOVE GROUND LINE

laximum slope of 12:1.
ocated as shown on the plans or as directed by the
fset from pedestrian crosswalks but should not be located
xisting light poles, fire hydrants, drop inlets, etc. will also

d and paid for at the contract unit prices for sidewalk, curb
nents there of which price shall include all work
ify the items as required.
ith Standard CG-3 or CG-7, the curb face on this
to match the mountable curb configuration.
th is not obtainable.

BOTTOM ELEV 22.00

INV 22.50

INTO BASE, BTM ELEV 21.00

1. THE CONTRACTOR SHALL PLACE FILL MATERIAL IN 6" TO 8" LIFTS AND COMPACT TO 95% MAXIMUM DRY DENSITY AT 95% OPTIMUM MOISTURE CONTENT.
2. THE CONTRACTOR SHALL PROVIDE FILL MATERIAL FREE OF ORGANICS, STUMPS, ROOTS AND OTHER DELETERIOUS MATERIAL.
3. THE REMOVAL OF UNSUITABLE MATERIAL UNDER THE EMBANKMENT SHALL BE COMPLETED UNDER THE SUPERVISION OF A GEOTECHNICAL ENGINEER.
4. CONSTRUCTION OF THE IMPERVIOUS MATERIAL EARTHEN EMBANKMENT SHALL BE COMPLETED UNDER THE SUPERVISION OF A GEOTECHNICAL ENGINEER.

RAMP
HANDICAPPED)

DRY POND DETAIL

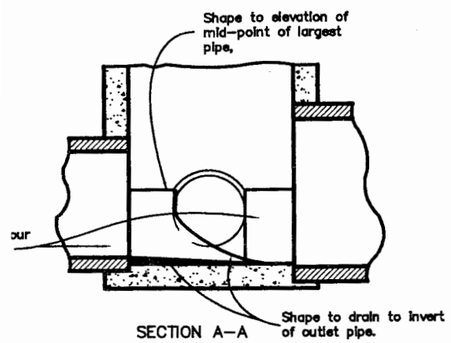

TREATMENT IN DROP INLETS

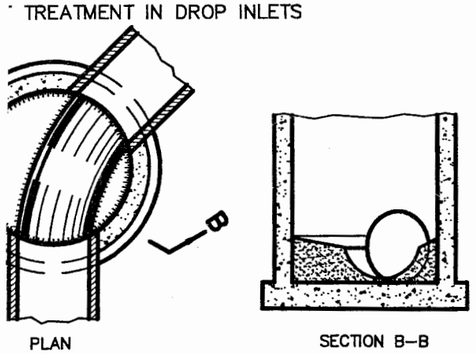

F TREATMENT IN MANHOLES

ANHOLE & INLET INVERTS

END-SECTION 12"-60" PIPE

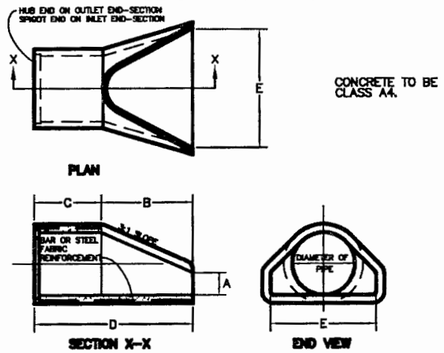

END-SECTION DIMENSIONS					
DIAM.	A	B	C	D	E
12"	4"	2'-0"	2'-0"	4'-0"	2'-0"
15"	6"	2'-3"	1'-9"	4'-0"	2'-6"
18"	9"	2'-3"	1'-9"	4'-0"	3'-0"
24"	9-1/2"	3'-7"	2'-8"	6'-1"	4'-0"
30"	1'-0"	4'-6"	1'-7-3/4"	6'-1-3/4"	5'-0"
36"	1'-3"	5'-3"	2'-10-3/4"	6'-1-3/4"	6'-0"
42"	1'-6"	5'-3"	2'-11"	6'-2"	6'-6"
48"	2'-0"	6'-0"	2'-2"	6'-2"	7'-0"
54"	2'-3"	5'-5"	2'-9-1/4"	6'-2-1/4"	7'-6"
60"	2'-11"	5'-0"	3'-3"	6'-3"	8'-0"

ALTERNATE END-SECTION 12"-48" PIPE

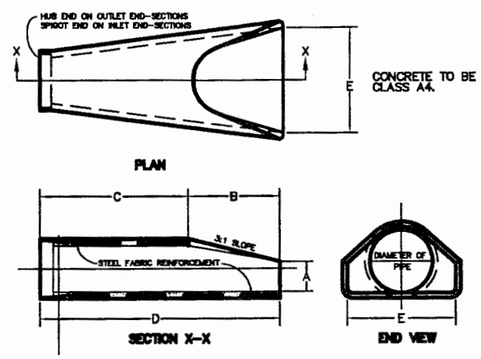

END-SECTION DIMENSIONS					
DIAM.	A	B	C	D	E
12"	4"	2'-0"	4'-1"	6'-1"	2'-0"
15"	6"	2'-3"	3'-10"	6'-1"	2'-6"
18"	9"	2'-3"	3'-10"	6'-1"	3'-0"
24"	10"	3'-7"	2'-8"	6'-3"	4'-0"
30"	1'-0"	4'-6"	1'-7-3/4"	6'-1-3/4"	5'-0"
36"	1'-3"	5'-3"	2'-10-3/4"	6'-1-3/4"	6'-0"
42"	1'-6"	5'-3"	2'-11"	6'-2"	6'-6"
48"	2'-0"	6'-0"	2'-2"	6'-2"	7'-0"

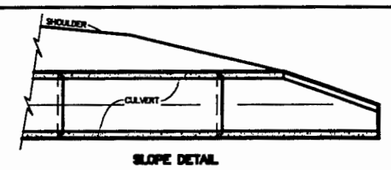

NOTE: PIPE LENGTHS SHOWN ON PLANS ARE BASED ON END-SECTION DESIGN SHOWN ON THE LEFT. IF THE CONTRACTOR ELECTS TO USE THE ALTERNATE DESIGN SHOWN ON THE RIGHT, LENGHTS WILL BE REDUCED BY THE DIFFERENCE IN DIMENSION "D".

FLARED END-SECTIONS FOR CONCRETE PIPE CULVERTS (ES-1)

NO PROJECTION OF PIPE ABOVE GROUND LINE

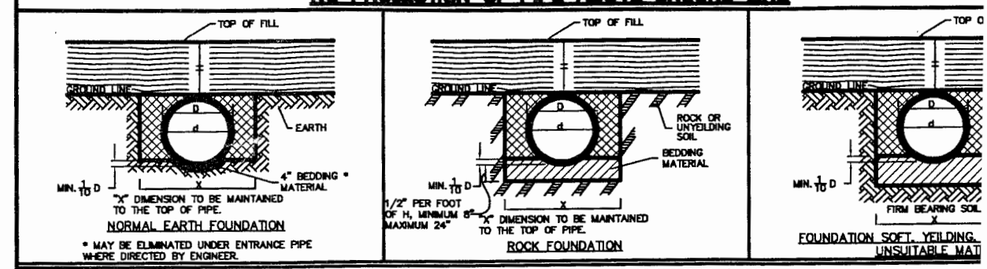

PIPE PROJECTING ABOVE GROUND LINE

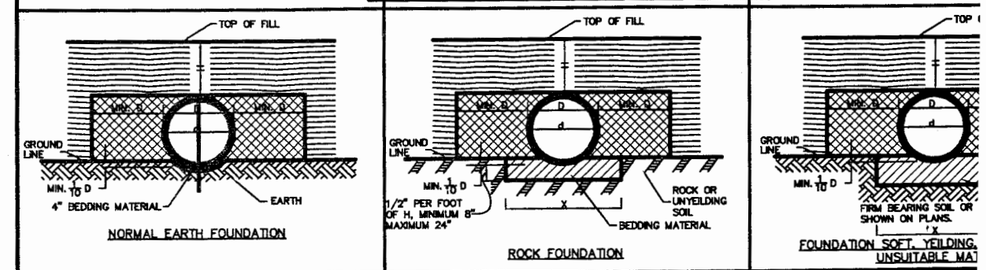

CULVERTS LESS THAN d = 36"
X = D + 12" MINIMUM
D + 24" MAXIMUM
CULVERTS WHERE d = 36" AND OVER
X = D + 36"
METHOD "A" PIPE BEDDING SHALL BE USED AS FOLLOWS UNLESS OTHERWISE NOTED ON PLANS:
RIGID PIPE
FILLS UP TO 30' (NO PROJECTION OF PIPE ABOVE GROUND LINE

FILLS UP TO 30' (PIPE PROJECTION ABOVE GROUND LINE)
FLEXIBLE PIPE
AS SHOWN ON TABLES
H = HEIGHT OF COVER MEASURED FROM TOP OF DRAINAGE STRUCTURE TO FINISHED GRADE.

- BEDDING MATERIAL IN ACCORDANCE WITH SECTION 302.02 OF THE ROAD AND BRIDGE SPECIFI
- BACKFILL MATERIAL IN ACCORDANCE WITH SECTION 302.07 OF THE ROAD AND BRIDGE SPECIFI
- EMBANKMENT

BEDDING MATERIAL REQUIREMENTS DETAILED UNDER METHOD A, PROJECTING CONDITIONS, ARE AF METHOD B1 AND B2.

INSTALLATION OF PIPE CULVERTS AND STORM SE
PIPE BEDDING - METHOD "A" (FILLS UP TO 30')

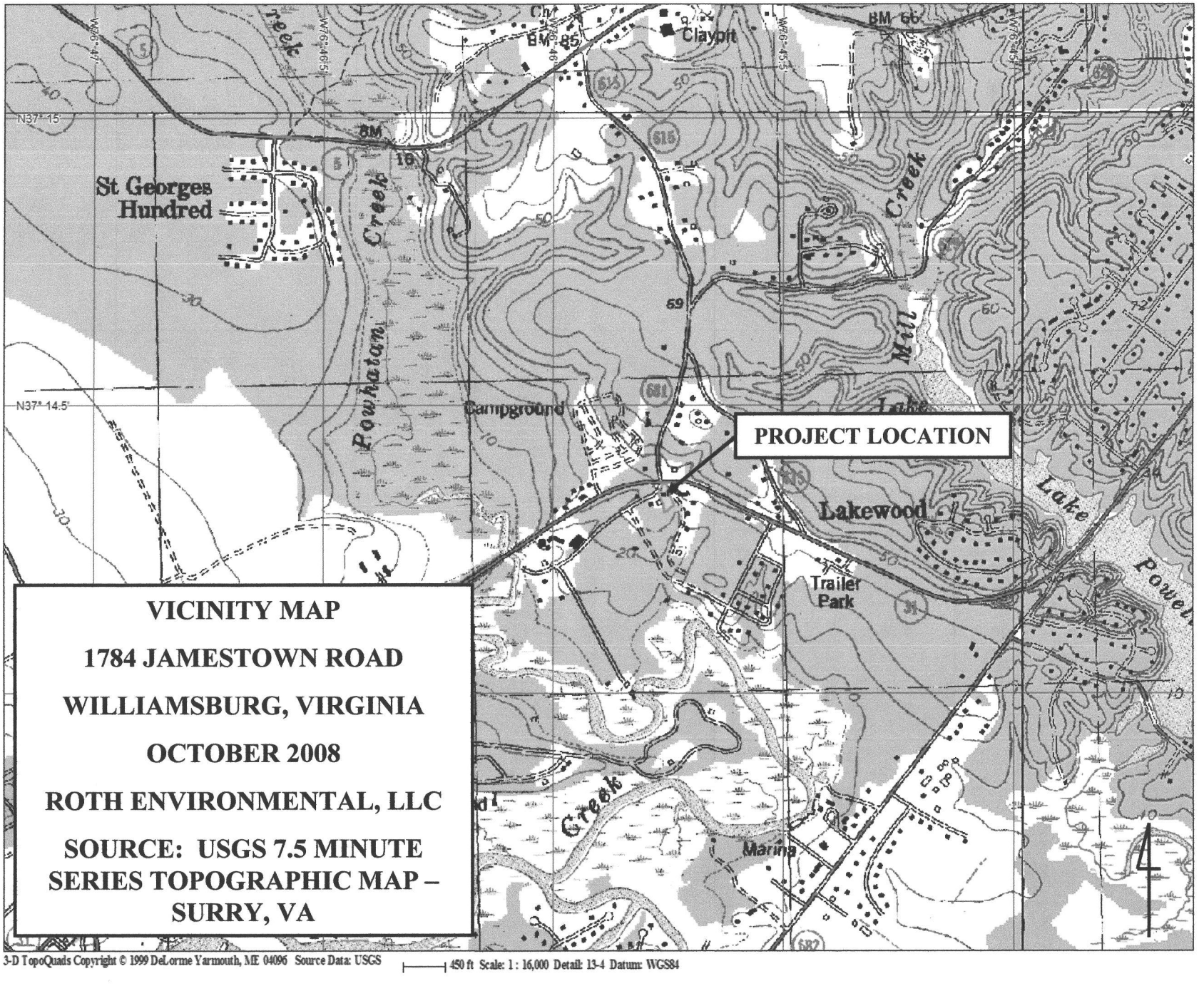

VICINITY MAP

1784 JAMESTOWN ROAD

WILLIAMSBURG, VIRGINIA

OCTOBER 2008

ROTH ENVIRONMENTAL, LLC

SOURCE: USGS 7.5 MINUTE SERIES TOPOGRAPHIC MAP – SURRY, VA

3-D TopoQuads Copyright © 1999 DeLorme Yarmouth, ME 04096 Source Data: USGS

450 ft Scale: 1 : 16,000 Detail: 13-4 Datum: WGS84

Erosion and Sediment Control Narrative

for

Mediterranean Restaurant
1784 Jamestown Road

March 30, 2009
Revised May 29, 2009

Project Number 08-230
JCC SP-0036-2009

SP-36-09
FINAL SET

RECEIVED
JUN 2009
Planning Department

LandTech Resources, Inc.
205-E Bulifants Blvd., Williamsburg, VA
Phone 757-565-1677 **Fax 757-565-0782**

Erosion and Sediment Control Narrative

for

Mediterranean Restaurant
1784 Jamestown Road

March 30, 2009
Revised May 29, 2009

Project Number 08-230
JCC SP-0036-2009

COMMONWEALTH OF VIRGINIA
K.M. JENKINS II
Lic. No. 022872
5/29/09
PROFESSIONAL ENGINEER

LandTech Resources, Inc.
205-E Bulifants Blvd., Williamsburg, VA
Phone 757-565-1677 **Fax 757-565-0782**

TABLE OF CONTENTS

SECTION

PROJECT DESCRIPTION

EXISTING CONDITIONS

ADJACENT AREAS

OFF-SITE AREA

SOILS

Craven-Uchee complex (11C)
Slagle (29A)
Slagle (29B)

CRITICAL EROSION AREAS

EROSION AND SEDIMENT CONTROL MEASURES

STRUCTURAL PRACTICES

Temporary Stone Construction Entrance – 3.02
Silt Fence – 3.05
Storm Drain Inlet Protection – 3.07
Temporary Diversion Dike – 3.09
Temporary Sediment Basin – 3.14
Outlet Protection – 3.18
Rock Check Dam – 3.20
Soil Stabilization Blankets and Matting – 3.36
Tree Preservation and Protection – 3.38

VEGETATIVE PRACTICES

Permanent Seeding – 3.32

MANAGEMENT STRATEGIES

PERMANENT STABILIZATION

STORMWATER MANAGEMENT

CALCULATIONS

MAINTENANCE

Temporary Stone Construction Entrance – 3.02
Silt Fence – 3.05
Storm Drain Inlet Protection – 3.07
Temporary Diversion Dike – 3.09
Temporary Sediment Basin – 3.14
Rock Check Dam – 3.20
Permanent Seeding – 3.32
Soil Stabilization Blankets and Matting – 3.36

APPENDICES

BMP Design and Storm Sewer System Design APPENDIX A

Sediment Basin Design APPENDIX B

Environmental Inventory APPENDIX C

PROJECT DESCRIPTION

The project consists of the construction of a 96-seat restaurant with 24-space parking lot at 1784 Jamestown Road in James City County, Virginia. The site is 1.27 acres with a total of 0.37 acres to be covered by impervious surfaces after construction is complete. The total disturbed area is approximately 0.75 acres.

EXISTING CONDITIONS

Currently the front half of the site contains three existing building and parking lot and the rear half is wooded. The existing site drains to an existing ditch that flows to Powhatan Creek.

ADJACENT AREAS

The site is bounded on the east by a developed commercial site, on the west by an undeveloped commercial site, on the north by Jamestown Road and Sandy Bay Road and on the south by a developed commercial site.

OFF-SITE AREA

There are no off-site areas proposed to be disturbed in association with this project. However, if it becomes necessary to disturb off-site areas, a revised erosion and sediment control plan will be prepared and submitted to the county for review and approval.

SOILS

Craven-Uchee complex (11C)

This complex consists of moderately well drained Craven soils and well drained Uchee soils.

Typically, the surface layer of the Craven soils is dark grayish brown fine sandy loam about 4 inches thick. The subsurface layer is pale olive fine sandy loam 5 inches thick. The subsoil extends to a depth of 42 inches. It is yellowish brown clay in the upper part and yellowish brown sandy clay loam mottled with gray in the middle and lower parts. The substratum extends to a depth of at least 72 inches. It is brownish yellow fine sandy loam mottled with gray in the upper part and gray loamy fine sand with yellow mottles in the lower part.

Typically, the surface layer of the Uchee soils is dark grayish brown loamy fine sand about 5 inches thick. The subsurface layer is light yellowish brown and very pale brown loamy fine sand 19 inches thick. The subsoil extends to a depth of 56 inches. It is strong brown sandy clay loam above a depth of 36 inches and strong brown sandy clay loam and clay mottled with gray and red from 36 to 56 inches. The substratum from 56 to at least 65 inches is variegated red, brown, and gray stratified sandy loam and sandy clay loam.

In the Craven soils, permeability is slow; and in the Uchee soils, it is moderate in the upper part of the subsoil and moderately slow in the lower part. The erosion hazard is severe. The subsoil of both soils has moderate shrink-swell potential.

Slagle (29A)

This soil is deep, nearly level, and moderately well drained.

Typically, the surface layer of this soil is dark grayish brown fine sandy loam about 4 inches thick. The subsurface layer is light yellowish brown fine sandy loam 5 inches thick. The subsoil extends to a depth of 50 inches thick. It is mostly mottled yellowish brown clay loam to a depth of 25 inches. Below this depth, it is mostly mottled clay loam and sandy clay loam. The substratum is mottled sandy clay loam to a depth of at least 60 inches.

In this Slagle soil, permeability is moderate in the upper part of the subsoil and moderately slow or slow in the lower part. The erosion hazard is slight. The subsoil has moderate shrink-swell potential.

Slagle (29B)

This soil is deep, gently sloping, and moderately well drained.

Typically, the surface layer of this soil is dark grayish brown fine sandy loam about 4 inches thick. The subsurface layer is light yellowish brown fine sandy loam 5 inches thick. The subsoil extends to a depth of 50 inches thick. It is mostly mottled yellowish brown clay loam to a depth of 25 inches. Below this depth, it is mostly mottled clay loam and sandy clay loam. The substratum is mottled sandy clay loam to a depth of at least 60 inches.

In this Slagle soil, permeability is moderate in the upper part of the subsoil and moderately slow or slow in the lower part. The erosion hazard is slight. The subsoil has moderate shrink-swell potential.

CRITCAL EROSION AREAS

The critical erosion area associated with this site is the existing drainage ditch that flows from the rear of the property to Powhatan Creek. To prevent sediment from leaving the site to this area, it is imperative that the contractor install all erosion and sediment control measures shown on these plans before any land disturbing activities commence. Regular inspection and maintenance is also required for all erosion and sediment control measures to keep them functioning as designed.

EROSION AND SEDIMENT CONTROL MEASURES

Unless otherwise indicated, all structural and vegetative erosion and sediment control practices shall be constructed and maintained according to minimum standards and specifications of the

latest edition of Virginia Erosion and Sediment Control Handbook (VESCH). The minimum standards shall be adhered to unless otherwise waived or approved by variance.

STRUCTURAL PRACTICES

Temporary Stone Construction Entrance – 3.02

A construction entrance shall be provided at all points of ingress and egress to reduce the amount of mud transported onto paved public roads by motor vehicles and runoff.

Silt Fence – 3.05

Silt fence shall be placed around the limits of clearing to intercept and detain small amounts of sediment from disturbed areas during construction operations.

Storm Drain Inlet Protection – 3.07

Storm drain inlet protection shall be installed at all drainage inlets to prevent sediment from entering the storm drainage system prior to permanent stabilization of the disturbed areas.

Temporary Diversion Dike – 3.09

Temporary diversion dikes are to be installed along the perimeter of the disturbed area to divert sediment-laden runoff to the sediment basin and rock check dam.

Temporary Sediment Basin – 3.14

A temporary sediment basin will be installed to detain sediment-laden runoff from the disturbed areas in "wet" and "dry" storage long enough to allow the majority of the sediment to settle out.

Outlet Protection – 3.18

Outlet protection shall be provided to prevent scour at the RCP outlet and to minimize the potential for downstream erosion.

Rock Check Dam – 3.20

A rock check dam shall be installed in the existing drainage way to trap sediment generated from the upslope area, mainly by ponding of the stormwater runoff.

Soil Stabilization Blankets and Matting – 3.36

Jute mesh shall be provided to aid in controlling erosion on the dry basin and steep slope areas on the sites by providing a microclimate which protects young vegetation and promotes its establishment.

Tree Preservation and Protection – 3.38

Tree preservation and protection shall be installed to protect desirable trees from mechanical and other injury during land disturbing and construction activity.

VEGETATIVE PRACTICES

Permanent Seeding – 3.32

All denuded areas, which will be left dormant for extended periods of time, shall be seeded with permanent vegetation immediately following grading. Selection of the seed mixture will depend on the time of year it is applied.

MANAGEMENT STRATEGIES

- Sediment trapping measures will be installed as the first step in grading and will be seeded and mulched immediately following installation.
- Temporary seeding or other stabilization will follow immediate after grading.
- The contractor shall be responsible for the installation and maintenance of all erosion and sediment control practices depicted on the Plans.
- After achieving adequate stabilization, the temporary controls will be cleaned and removed. Any areas disturbed in the removal process shall be graded, top soiled, and seeded accordingly.

PERMANENT STABILIZATION

All areas disturbed by construction shall be stabilized with permanent seeding immediately following finish grading. Seeding shall be accomplished with Kentucky 31 Tall Fescue according to Standards and Specifications 3.32, Permanent Seeding of the VESCH. Soil stabilization blankets will be installed over slopes, which have been brought to final grade and have been seeded to protect the slopes from rill and gully erosion and to allow seed to germinate properly. Mulch (straw or fiber) will be used on relatively flat areas. In all seeding operations, seed, fertilizer and lime will be applied prior to mulching.

STORMWATER MANAGEMENT

This project is for the construction of a 96-seat restaurant with 24-space parking lot at 1784 Jamestown Road. The current site contains three buildings and is 1.27 acres. After development the site will contain approximately 0.37 impervious acres. To meet the stormwater quality requirements of the James City County BMP Point System and the stormwater quantity requirements of Minimum Standard 19 of the Virginia Stormwater Management Handbook an extended dry detention basin (Type F-2 BMP) will be utilized to treat the additional stormwater runoff. The dry basin outlet structure releases the first one-inch of runoff and the 1-year post-development storm over 24 hours. The outlet structure releases the 10-year post-development storm of 8.77 cfs at 6.34 cfs, which is less than the pre-development rate of 6.48 cfs. The 100-year post-development storm of 13.14 cfs is released at 12.91 with 1.02 foot of freeboard.

CALCULATIONS

Appendix A contains design calculations for the BMP and storm sewer system.
Appendix B contains design calculations for the sediment basin.

MAINTENANCE

In general, all erosion and sediment control measures will be checked daily and after each significant rainfall. The following items will be checked in particular:

Temporary Stone Construction Entrance – 3.02

The entrance shall be maintained in a condition, which will prevent tracking or flow of mud onto public rights-of-way. This may require periodic dressing with additional stone or the washing and reworking of existing stone as conditions demand. All materials spilled, dropped, washed, or tracked from vehicles onto roadways or into storm drains must be removed immediately. The use of water trucks to remove materials dropped, washed, or tracked onto roadways will not be permitted under any circumstances.

Silt Fence – 3.05

Silt fence shall be inspected immediately after each rainfall and at least daily during prolonged rainfall. Any required repairs shall be made immediately.

Close attention shall be paid to the repair of damaged silt fence resulting from end runs and undercutting.

Should the fabric on a silt fence decompose or become ineffective prior to the end of the expected usable life and the barrier still be necessary, the fabric shall be replaced promptly.

Sediment deposits should be removed after each storm event. They must be removed when deposits reach approximately one-half the height of the barrier.

Any sediment deposits remaining in place after the silt fence is not longer required shall be dressed to conform with the existing grade, prepared and seeded.

Storm Drain Inlet Protection – 3.07

The structure shall be inspected after each rain and repairs made as needed.

Sediment shall be removed and the trap restored to its original dimensions when sediment has accumulated to one-half of the design depth. Removed sediment shall be deposited in a suitable area and in such a manner that it will not erode and cause sedimentation problems.

Temporary structures shall be removed when they have served their useful purpose but not before the upslope area has been permanently stabilized.

Temporary Diversion Dike – 3.09

The measure shall be inspected after every storm and repairs made to the dike, flow channel, outlet or sediment trapping facility, as necessary. Once every two weeks, whether a storm event has occurred or not, the measure shall be inspected and repairs made if needed. Damages caused by construction traffic or other activity must be repaired before the end of each working day.

Temporary Sediment Basin – 3.14

The basin embankment shall be checked regularly to ensure that it is structurally sound and has not been damaged by erosion or construction equipment.

The emergency spillway shall be checked regularly to ensure that its lining is well established and erosion-resistant.

The basin shall be checked after each runoff-producing rainfall for sediment cleanout. When the sediment reaches the clean-out level, it shall be removed and properly disposed of.

Rock Check Dam – 3.20

Check dams shall be checked for sediment accumulation after each runoff-producing storm event. Sediment shall be removed when it reaches one half of the original height of the measure.

Regular inspections shall be made to insure that the center of the dam is lower than the edges. Erosion caused by high flows around the edges of the dam shall be corrected immediately.

Permanent Seeding – 3.32

The seeded/mulched areas should be checked regularly to ensure that a good stand is established and maintained. Areas should be fertilized, mulched and re-seeded as needed. When it is clear that plants have not germinated on an area or have died, these areas must be re-seeded immediately to prevent erosion damage. However, it is extremely important to determine for what reason germination did not take place and make any corrective action necessary prior to re-seeding the area.

- Fertilizer shall be applied using approved fertilization methods and equipment.
- Formulations and application rates shall conform to the guidelines given in VESCH.
- Maintain a ground cover or organic mulch around trees that is adequate to prevent erosion, protect roots, and hold water.

Soil Stabilization Blankets and Matting – 3.36

All soil stabilization blankets and matting should be inspected periodically following installation, particularly after rainstorms to check for erosion and undermining. Any dislocation or failure

should be repaired immediately. If washouts or breakage occurs, reinstall the material after repairing damage to the slope. Continue to monitor these areas until which time they become permanently stabilized; at that time an annual inspection should be adequate.

APPENDIX A

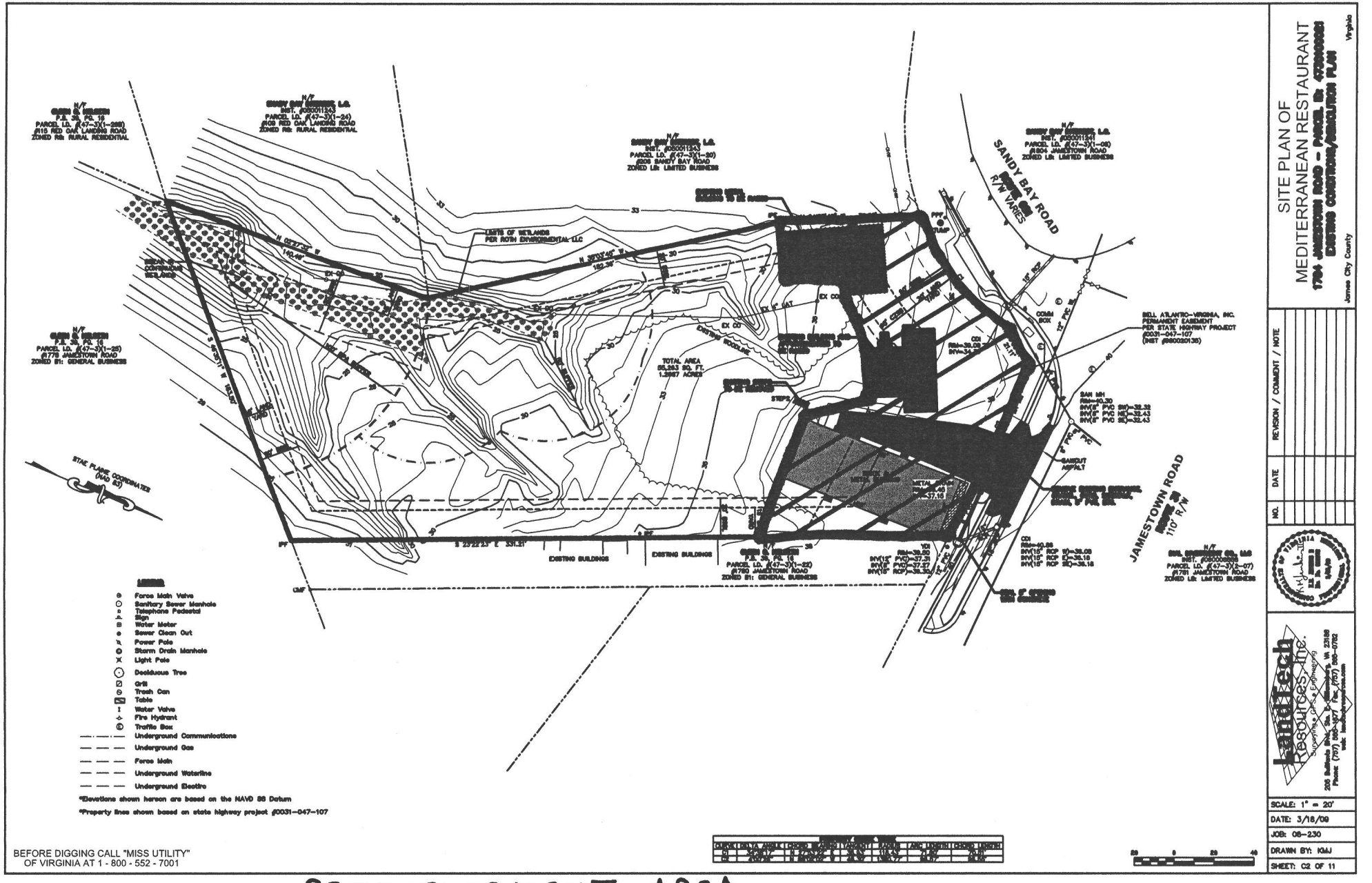

REDEVELOPMENT AREA
PRE-DEVELOPMENT

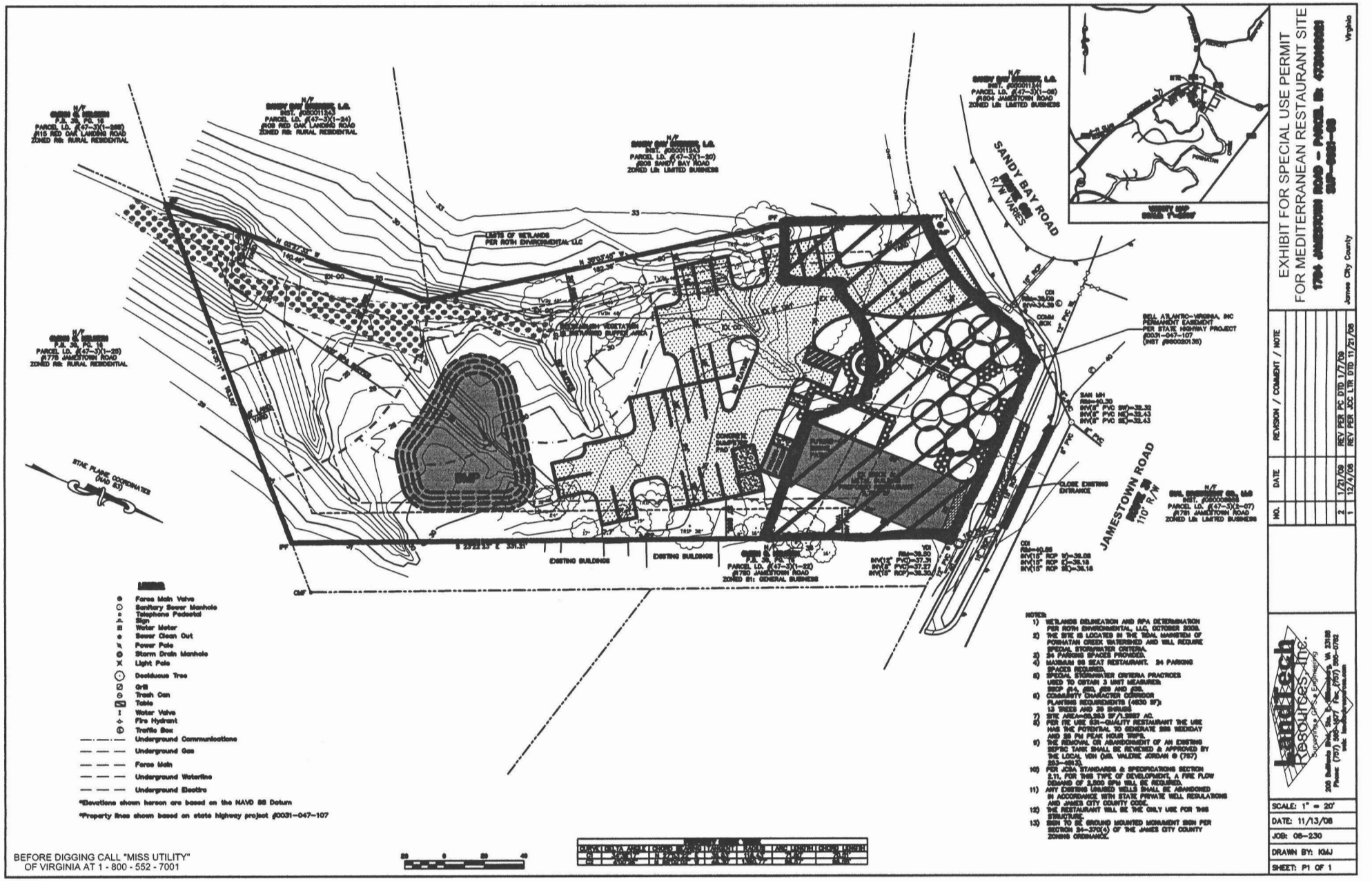

REDEVELOPMENT AREA
POST- DEVELOPMENT

LandTech Resources, Inc.
Surveying • Engineering • GPS
201 Bulifants Blvd., Suite A, Williamsburg, VA 23188
Phone: (757) 565-1677 Fax: (757) 565-0782
web: landtechresources.com

PROJECT NAME Mediterranean Rest.
PROJECT NO. 08-230
SHEET NO. OF
CALCULATED BY KMS DATE 3/18/09
SCALE

REDEVELOPMENT REQUIREMENTS

Water Quality Improvement Requirement - 10% pollutant reduction for the area of redevelopment.

Redevelopment Area = 0.31 ac

Pre-Development Impervious Area = 0.16 ac

Post-Development Impervious Area = 0.13 ac

Since there is a 19% reduction in impervious area from pre-development to post-development conditions in the redevelopment area the water quality improvement requirements are satisfied.

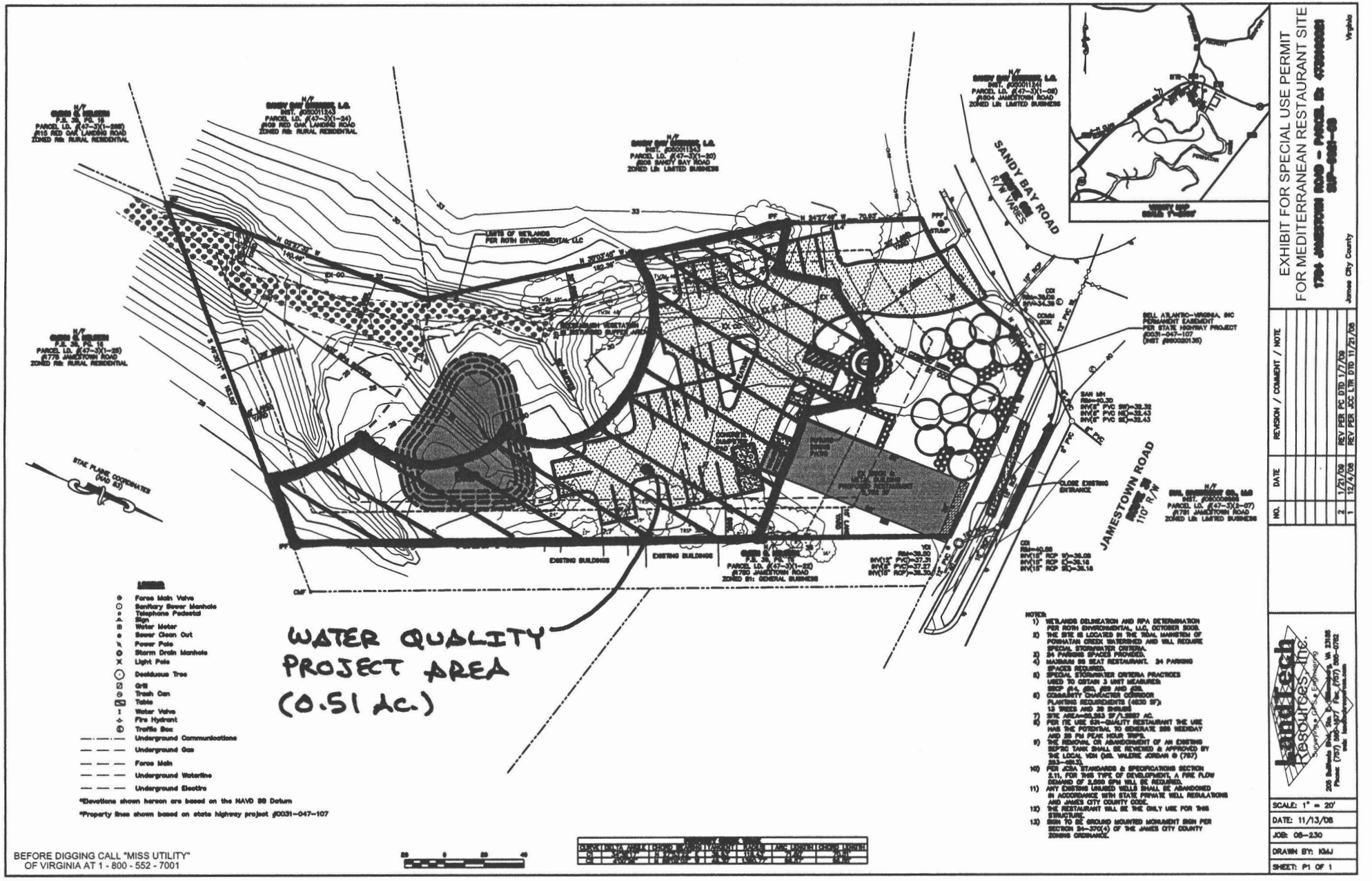
EXHIBIT FOR SPECIAL USE PERMIT
FOR MEDITERRANEAN RESTAURANT SITE
1704 JAMESTOWN ROAD – PARCEL ID: 4720900001
SUP-0031-08
James City County
Virginia
VICINITY MAP
SCALE: 1" = 1,000'
SANDY BAY ROAD
R/W VARIES
JAMESTOWN ROAD
110' R/W
LIMITS OF WETLANDS
PER ROTH ENVIRONMENTAL LLC
EXISTING BUILDINGS
EXISTING BUILDINGS
CLOSE EXISTING ENTRANCE
BELL ATLANTIC-VIRGINIA, INC
PERMANENT EASEMENT
PER STATE HIGHWAY PROJECT
#0031-047-107
(INST #980020135)
STATE PLANE COORDINATES
(NAD 83)
WATER QUALITY
PROJECT AREA
(0.51 ac.)
LEGEND
Force Main Valve
Sanitary Sewer Manhole
Telephone Pedestal
Sign
Water Meter
Sewer Clean Out
Power Pole
Storm Drain Manhole
Light Pole
Deciduous Tree
Grill
Trash Can
Table
Water Valve
Fire Hydrant
Traffic Box
Underground Communications
Underground Gas
Force Main
Underground Waterline
Underground Electric
*Elevations shown hereon are based on the NAVD 88 Datum
*Property lines shown based on state highway project #0031-047-107
NOTES:
1) WETLANDS DELINEATION AND RPA DETERMINATION PER ROTH ENVIRONMENTAL, LLC, OCTOBER 2008.
2) THE SITE IS LOCATED IN THE TIDAL MAINSTEM OF POWHATAN CREEK WATERSHED AND WILL REQUIRE SPECIAL STORMWATER CRITERIA.
3) 34 PARKING SPACES PROVIDED.
4) MAXIMUM 68 SEAT RESTAURANT. 34 PARKING SPACES REQUIRED.
5) SPECIAL STORMWATER CRITERIA PRACTICES USED TO OBTAIN 3 UNIT MEASURES SSCP (A4, B5), JB2 AND JC6.
6) COMMUNITY CHARACTER CORRIDOR PLANTING REQUIREMENTS (4630 SF) 13 TREES AND 39 SHRUBS
7) SITE AREA=22,263 SF/0.5527 AC.
8) PER ITE USE 931–QUALITY RESTAURANT THE USE HAS THE POTENTIAL TO GENERATE 555 WEEKDAY AND 55 PM PEAK HOUR TRIPS.
9) THE REMOVAL OR ABANDONMENT OF AN EXISTING SEPTIC TANK SHALL BE REVIEWED & APPROVED BY THE LOCAL VDH (MS. VALERIE JORDAN @ (757) 253–4832).
10) PER JCSA STANDARDS & SPECIFICATIONS SECTION 5.11, FOR THIS TYPE OF DEVELOPMENT, A FIRE FLOW DEMAND OF 2,500 GPM WILL BE REQUIRED.
11) ANY EXISTING UNUSED WELLS SHALL BE ABANDONED IN ACCORDANCE WITH STATE PRIVATE WELL REGULATIONS AND JAMES CITY COUNTY CODE.
12) THE RESTAURANT WILL BE THE ONLY USE FOR THIS STRUCTURE.
13) SIGN TO BE GROUND MOUNTED MONUMENT SIGN PER SECTION 24–370(4) OF THE JAMES CITY COUNTY ZONING ORDINANCE.
BEFORE DIGGING CALL "MISS UTILITY"
OF VIRGINIA AT 1 - 800 - 552 - 7001
NO. | DATE | REVISION / COMMENT / NOTE
2 | 1/21/09 | REV PER PC DTD 1/7/09
1 | 12/4/08 | REV PER JCC LTR DTD 11/21/08
LandTech Resources, Inc.
SCALE: 1" = 20'
DATE: 11/13/08
JOB: 08–230
DRAWN BY: KMJ
SHEET: P1 OF 1

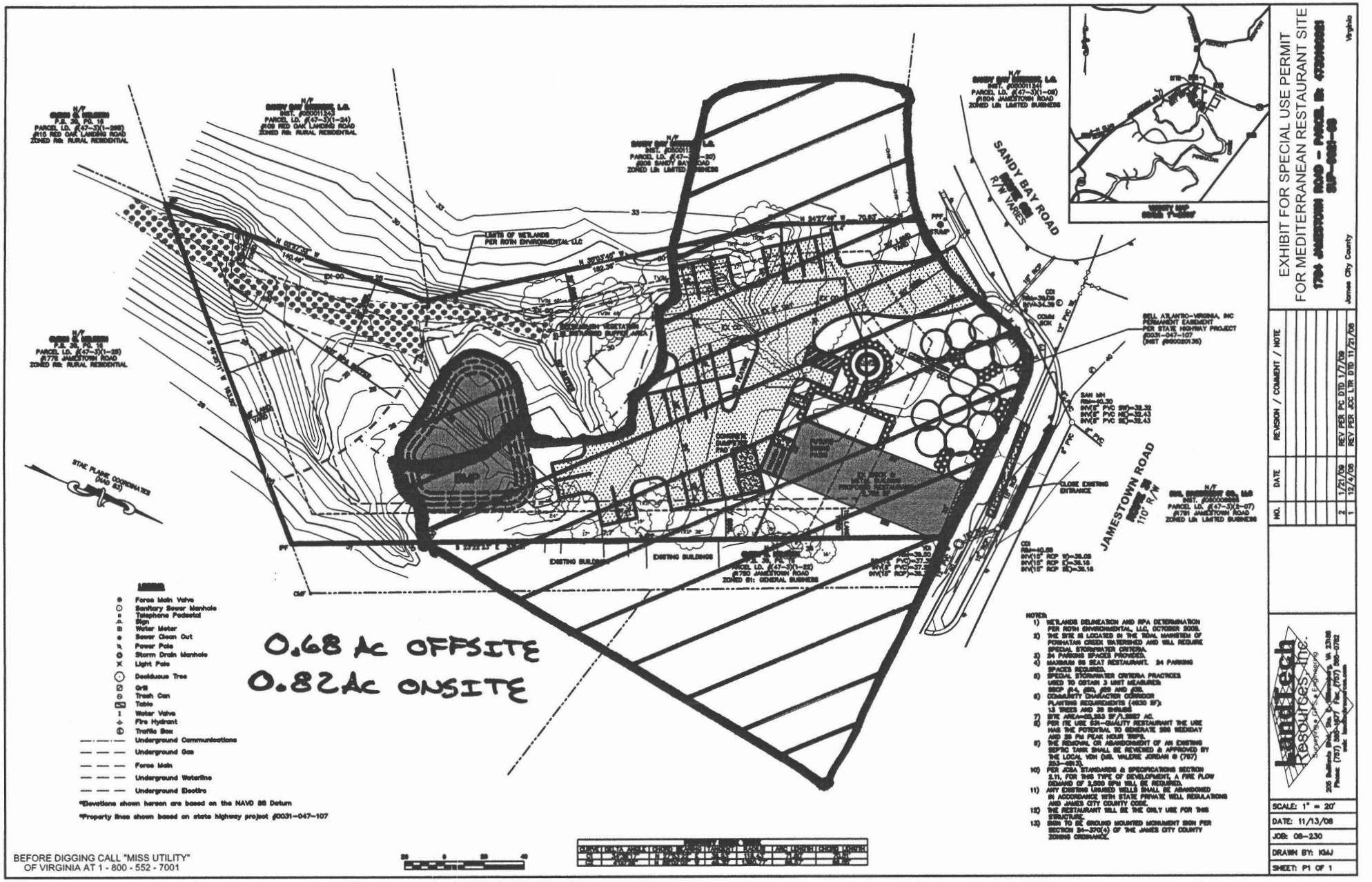
EXHIBIT FOR SPECIAL USE PERMIT
FOR MEDITERRANEAN RESTAURANT SITE
1704 JAMESTOWN ROAD - PARCEL ID: 4720900025
SUP-0021-08
James City County
Virginia
SANDY BAY ROAD
R/W VARIES
JAMESTOWN ROAD
110' R/W
LIMITS OF WETLANDS PER ROTH ENVIRONMENTAL LLC
EXISTING BUILDING
EXISTING BUILDING
CLOSE EXISTING ENTRANCE
0.68 Ac OFFSITE
0.82Ac ONSITE
BMP DRAINAGE AREA
BEFORE DIGGING CALL "MISS UTILITY"
OF VIRGINIA AT 1 - 800 - 552 - 7001
SCALE: 1" = 20'
DATE: 11/13/08
JOB: 08-230
DRAWN BY: KAJ
SHEET: P1 OF 1
NO. DATE REVISION / COMMENT / NOTE
2 1/21/09 REV PER PC DTD 1/7/09
1 12/4/08 REV PER JCC LTR DTD 11/21/08

Worksheet for BMP Point System

A. STRUCTURAL BMP POINT ALLOCATION

10-Pt Water Quality
Project Area = 0.51 Ac

BMP	BMP Points		Fraction of Site Served by BMP		Weighted BMP Points
BMP Drainage Area = 1.50 F2	4	x	2.94	=	11.76
		x		=	
		x		=	
		x		=	

TOTAL WEIGHTED STRUCTURAL BMP POINTS: 11.76

B. NATURAL OPEN SPACE CREDIT

Fraction of Site		Natural Open Space Credit		Points for Natural Open Space
	x	(0.1 per 1%)	=	
	x	(0.15 per 1%)	=	

TOTAL NATURAL OPEN SPACE CREDIT: Ø

C. TOTAL WEIGHTED POINTS

11.76	+	Ø	=	11.76
Structural BMP Points		Natural Open Space Points		Total

LandTech
Resources, Inc.
Surveying • Engineering • GPS
201 Bulifants Blvd., Suite A, Williamsburg, VA 23188
Phone: (757) 565-1677 Fax: (757) 565-0782
web: landtechresources.com

PROJECT NAME Mediterranean Rest.
PROJECT NO. 08-230
SHEET NO. OF
CALCULATED BY KMJ DATE 3/18/09
SCALE

SPECIAL STORMWATER CRITERIA

Site Area = 1.27ac

Disturbed Area = 0.65± Ac.

SSC Class 2 = 2unit measures required from the SSCP Menu

SSCP #20 - Stilling Basin @ BMP Outlet = 1 unit
SSCP #29 - Rain Barrels @ all downspouts = 1 unit

2 units provided

Worksheet 2: Runoff curve number and runoff

Project	By	Date
Mediterranean Restaurant	KMJ	12/12/08
Location	**Checked**	**Date**
James City County, Va.		

Check one: ☒ Present ☐ Developed

1. Runoff curve number

Soil name and hydrologic group (appendix A)	Cover description (cover type, treatment, and hydrologic condition; percent impervious; unconnected/connected impervious area ratio)	CN 1/ Table 2-2	CN 1/ Figure 2-3	CN 1/ Figure 2-4	Area ☒ acres ☐ mi² ☐ %	Product of CN x area
Craven-Uchee Slagle (C)	Woods (Good Condition)	70			.68	47.60
Craven-Uchee Slagle (C)	Open (Good Condition)	74			.40	29.60
Craven-Uchee Slagle (C)	Roof / Road	98			.42	41.16

1/ Use only one CN source per line

Totals ➡ 1.50 | 118.36

CN (weighted) = $\frac{\text{total product}}{\text{total area}} = \frac{118.36}{1.50} = 78.9$; **Use CN** ➡ 79

2. Runoff

		Storm #1	Storm #2	Storm #3
Frequency	yr	1	2	10
Rainfall, P (24-hour)	in	2.8	3.5	5.8
Runoff, Q	in	1.0	1.5	3.5

(Use P and CN with table 2-1, figure 2-1, or equations 2-3 and 2-4)

Worksheet 3: Time of Concentration (T_c) or travel time (T_t)

Project	By	Date
Mediterranean Restaurant	KMJ	12/12/08
Location	**Checked**	**Date**
James City County, Va.		

Check one: ☒ Present ☐ Developed

Check one: ☒ T_c ☐ T_t through subarea

Notes: Space for as many as two segments per flow type can be used for each worksheet.
Include a map, schematic, or description of flow segments.

Sheet flow (Applicable to Tc only)

	Segment ID		
1. Surface description (table 3-1)	Natural		
2. Manning's roughness coefficient, n (table 3-1)	0.13		
3. Flow length, L (total L † 300 ft) ft	210		
4. Two-year 24-hour rainfall, P_2 in	3.5		
5. Land slope, s ft/ft	.048		
6. $T_t = \frac{0.007\ (nL)^{0.8}}{P_2^{0.5}\ s^{0.4}}$ Compute T_t hr	.175	+	= .175

Shallow concentrated flow

	Segment ID		
7. Surface description (paved or unpaved)			
8. Flow length, L ft			
9. Watercourse slope, s ft/ft			
10. Average velocity, V (figure 3-1) ft/s			
11. $T_t = \frac{L}{3600\ V}$ Compute T_t hr		+	=

Channel flow

	Segment ID		
12. Cross sectional flow area, a ft^2	1.0		
13. Wetted perimeter, p_w ft	3.6		
14. Hydraulic radius, $r = \frac{a}{p_w}$ Compute r ft	.28		
15 Channel slope, s ft/ft	.059		
16. Manning's roughness coefficient, n	.030		
17. $V = \frac{1.49\ r^{2/3}\ s^{1/2}}{n}$ Compute V ft/s	5.0		
18. Flow length, L ft	85		
19. $T_t = \frac{L}{3600\ V}$ Compute T_t hr	.005	+	= .005

20. Watershed or subarea T_c or T_t (add T_t in steps 6, 11, and 19) Hr .18

Worksheet 5a: Basic watershed data

Project	Location	By	Date
Mediterranean Rest.	James City County, Va.	KMJ	12/12/08
Check one: ☒ Present ☐ Developed	Frequency (yr)	Checked	Date

~~Subarea name~~ STORM	Drainage area A_m (mi²)	Time of concentration T_c (hr)	Travel time through subarea T_t (hr)	Downstream subarea names	Travel time summation to outlet ΣT_t (hr)	24-hr rainfall P (in)	Runoff curve number CN	Runoff Q (in)	A_mQ (mi²—in)	Initial abstraction I_a (in)	I_a/P
1	.0023	.18				2.8	79	1.0	.0023	.532	.19
2	.0023	.18				3.5	79	1.5	.0035	.532	.15
10	.0023	.18				5.8	79	3.5	.0081	.532	.09
		From worksheet 3					From worksheet 2			From table 5-1	

PC251_MEDITERRANEAN_RESTAURANT - 066

Worksheet 5b: Basic watershed data

Project	Location	By	Date
Mediterranean Rest	James City County, Va.	KMJ	12/12/08
Check one: ☒ Present ☐ Developed	Frequency (yr)	Checked	Date

~~Subarea name~~ STORM	Basic watershed data used 1/				Select and enter hydrograph times in hours from exhibit 5-II 2/											
	Subarea T_c (hr)	ΣT_t to outlet (hr)	I_a/P	A_mQ (mi^2—in)					12.2							
					Discharges at selected hydrograph times 3/ (cfs)											
1	.18		.19	.0023					1.84							
2	.18		.15	.0035					2.80							
10	.18		.09	.0081					6.48							
Composite hydrograph at outlet																

1/ Worksheet 5a. Rounded as needed for use with exhibit 5.
2/ Enter rainfall distribution type used.
3/ Hydrograph discharge for selected times is A_mQ multiplied by tabular discharge from appropriate exhibit 5.

Worksheet 2: Runoff curve number and runoff

Project	By	Date
Mediterranean Restaurant	KWJ	12/12/08
Location	**Checked**	**Date**
James City County, Va.		

Check one: ☐ Present ☒ Developed

1. Runoff curve number

Soil name and hydrologic group (appendix A)	Cover description (cover type, treatment, and hydrologic condition; percent impervious; unconnected/connected impervious area ratio)	CN 1/ Table 2-2	CN 1/ Figure 2-3	CN 1/ Figure 2-4	Area ☒ acres ☐ mi² ☐ %	Product of CN x area
Craven-Uchee Slagle (C)	Open (Good Condition)	74			.59	43.66
Craven-Uchee Slagle (C)	Roof / Asphalt	98			.63	61.74
Craven-Uchee Slagle (C)	Woods (Good Condition)	70			.28	19.60
					Totals ➡	1.50 / 125.00

1/ Use only one CN source per line

CN (weighted) = $\frac{\text{total product}}{\text{total area}} = \frac{125.00}{1.50} = 83.3$; **Use CN** ➡ 83

2. Runoff

		Storm #1	Storm #2	Storm #3
Frequency	yr	1	2	10
Rainfall, P (24-hour)	in	2.8	3.5	5.8
Runoff, Q (Use P and CN with table 2-1, figure 2-1, or equations 2-3 and 2-4)	in	1.3	1.8	3.8

PC251_MEDITERRANEAN_RESTAURANT - 068

Worksheet 3: Time of Concentration (T_c) or travel time (T_t)

Project	By	Date
Mediterranean Restaurant	KMJ	12/12/08
Location	**Checked**	**Date**
James City County, Va.		

Check one: ☐ Present ☒ Developed

Check one: ☒ T_c ☐ T_t through subarea

Notes: Space for as many as two segments per flow type can be used for each worksheet. Include a map, schematic, or description of flow segments.

Sheet flow (Applicable to Tc only)

	Segment ID		
1. Surface description (table 3-1)	Natural		
2. Manning's roughness coefficient, n (table 3-1)	0.13		
3. Flow length, L (total L † 300 ft) ft	210		
4. Two-year 24-hour rainfall, P_2 in	3.5		
5. Land slope, s ft/ft	.048		
6. $T_t = \frac{0.007\ (nL)^{0.8}}{P_2^{0.5}\ s^{0.4}}$ Compute T_t hr	.175	+	= .175

Shallow concentrated flow

	Segment ID		
7. Surface description (paved or unpaved)			
8. Flow length, L ft			
9. Watercourse slope, s ft/ft			
10. Average velocity, V (figure 3-1) ft/s			
11. $T_t = \frac{L}{3600\ V}$ Compute T_t hr		+	=

Channel flow

	Segment ID		
12. Cross sectional flow area, a ft^2	1.0		
13. Wetted perimeter, p_w ft	3.6		
14. Hydraulic radius, $r = \frac{a}{p_w}$ Compute r ft	.28		
15 Channel slope, s ft/ft	.059		
16. Manning's roughness coefficient, n	.030		
17. $V = \frac{1.49\ r^{2/3}\ s^{1/2}}{n}$ Compute V ft/s	5.0		
18. Flow length, L ft	85		
19. $T_t = \frac{L}{3600\ V}$ Compute T_t hr	.005	+	= .005

20. Watershed or subarea T_c or T_t (add T_t in steps 6, 11, and 19) Hr .18

Worksheet 5a: Basic watershed data

Project	Location	By	Date
Mediterranean Rest.	James City County Va.	KWJ	12/12/08
Check one: ☐ Present ☒ Developed	Frequency (yr)	Checked	Date

~~Subarea name~~ STORM	Drainage area A_m (mi²)	Time of concentration T_c (hr)	Travel time through subarea T_t (hr)	Downstream subarea names	Travel time summation to outlet ΣT_t (hr)	24-hr rainfall P (in)	Runoff curve number CN	Runoff Q (in)	A_mQ (mi²—in)	Initial abstraction I_a (in)	I_a/P
1	.0023	.18				2.8	83	1.3	.0030	.410	.15
2	.0023	.18				3.5	83	1.8	.0041	.410	.12
10	.0023	.18				5.8	83	3.8	.0087	.410	.07
		From worksheet 3					From worksheet 2			From table 5-1	

PC251_MEDITERRANEAN_RESTAURANT - 070

Worksheet 5b: Basic watershed data

Project	Location	By	Date
Mediterranean Resti	James City County, Va.	KMJ	12/12/08
Check one: ☐ Present ☒ Developed	Frequency (yr)	Checked	Date

~~Subarea name~~ STORM	Basic watershed data used 1/				Select and enter hydrograph times in hours from exhibit 5-II 2/											
	Subarea T_c (hr)	ΣT_t to outlet (hr)	I_a/P	A_mQ (mi^2—in)				12.2								
					Discharges at selected hydrograph times 3/ (cfs)											
1	.18		.15	.0030				2.40								
2	.18		.12	.0041				3.28								
10	.18		.07	.0087				6.96								
Composite hydrograph at outlet																

1/ Worksheet 5a. Rounded as needed for use with exhibit 5.
2/ Enter rainfall distribution type used.
3/ Hydrograph discharge for selected times is A_mQ multiplied by tabular discharge from appropriate exhibit 5.

Worksheet 6a: Detention basin storage, peak outflow discharge (q_o) known

Project	By	Date
Mediterranean Restaurant	KHS	12/12/08
Location	**Checked**	**Date**
James City County, Va.		

Check one: ☐ Present ☒ Developed

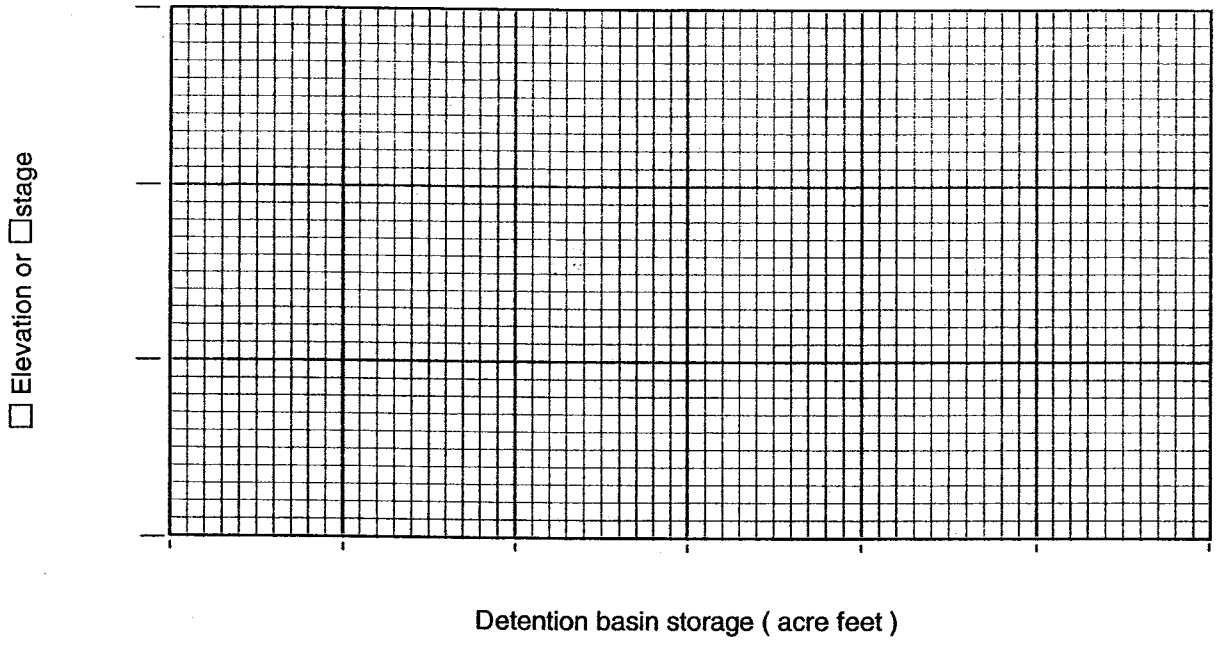

1. Data:
   Drainage area ..... A_m = .0023 mi²
   Rainfall distribution type (I, IA, II, III) = II

	1st Stage	2nd Stage
2. Frequency ..... yr	2	10
3. Peak inflow discharge q_i ..... ft³/s (from worksheet 4 or 5b)	3.28	6.96
4. Peak outflow discharge q_u ..... ft³/s 1/	2.80	6.48
5. Compute $\frac{q_o}{q_i}$	.85	.93
6. $\frac{V_s}{V_r}$ ..... (Use $\frac{q_o}{q_i}$ with figure 6-1)	.18	.18
7. Runoff, Q ..... in (From worksheet 2)	1.8	3.8
8. Runoff volume V_r..... ac ft ($V_r = QA_m$ 53.33)	.22	.47
9. Storage volume, V_s ..... ac-ft ($V_s = V_r (\frac{V_s}{V_r})$)	.04	.09
	1,750cf	4,000cf
10. Maximum storage E_{max} (from plot)		

1/ 2nd stage q_o includes 1st stage q_o.

LandTech
Resources, Inc.
Surveying • Engineering • GPS
201 Bulifants Blvd., Suite A, Williamsburg, VA 23188
Phone: (757) 565-1677 Fax: (757) 565-0782
web: landtechresources.com

PROJECT NAME Mediterranean Rest.
PROJECT NO. 08-230
SHEET NO. OF
CALCULATED BY KMJ DATE 3/18/09
SCALE

DESIGN EXTENDED DRY DETENTION BMP
TYPE F-2

Treatment Volume = 1.0 inch/impervious acre

Impervious Area = 0.63 ac = 27,443 sf

$WQV = \frac{27{,}443\ sf}{} \cdot \frac{1\ in}{} \cdot \frac{1\ ft}{12\ in} = 2{,}287\ cf$

1-Year Hydrograph

Hydrograph Report

Hydraflow Hydrographs Extension for AutoCAD® Civil 3D® 2008 by Autodesk, Inc. v6.049 Wednesday, Mar 18, 2009

Hyd. No. 1

Mediterranean Rest. Post-Development

Hydrograph type	= SCS Runoff	Peak discharge	= 2.946 cfs
Storm frequency	= 1 yrs	Time to peak	= 12.00 hrs
Time interval	= 1 min	Hyd. volume	= 7,135 cuft
Drainage area	= 1.500 ac	Curve number	= 83
Basin Slope	= 0.0 %	Hydraulic length	= 0 ft
Tc method	= TR55	Time of conc. (Tc)	= 10.9 min
Total precip.	= 2.80 in	Distribution	= Type II
Storm duration	= 24 hrs	Shape factor	= 484

Hydrograph Discharge Table

(Printed values >= 1.00% of Qp.)

Time -- Outflow (hrs cfs)		Time -- Outflow (hrs cfs)		Time -- Outflow (hrs cfs)		Time -- Outflow (hrs cfs)	
10.58	0.030	11.20	0.073	11.82	0.967	12.43	0.391
10.60	0.030	11.22	0.075	11.83	1.093	12.45	0.381
10.62	0.031	11.23	0.077	11.85	1.239	12.47	0.370
10.63	0.032	11.25	0.080	11.87	1.407	12.48	0.360
10.65	0.033	11.27	0.082	11.88	1.600	12.50	0.349
10.67	0.033	11.28	0.085	11.90	1.818	12.52	0.338
10.68	0.034	11.30	0.087	11.92	2.061	12.53	0.328
10.70	0.035	11.32	0.090	11.93	2.301	12.55	0.317
10.72	0.036	11.33	0.092	11.95	2.527	12.57	0.307
10.73	0.037	11.35	0.095	11.97	2.722	12.58	0.298
10.75	0.038	11.37	0.098	11.98	2.868	12.60	0.290
10.77	0.039	11.38	0.101	12.00	2.946 <<	12.62	0.282
10.78	0.040	11.40	0.104	12.02	2.942	12.63	0.275
10.80	0.041	11.42	0.107	12.03	2.846	12.65	0.269
10.82	0.042	11.43	0.110	12.05	2.696	12.67	0.263
10.83	0.043	11.45	0.113	12.07	2.494	12.68	0.259
10.85	0.044	11.47	0.116	12.08	2.259	12.70	0.254
10.87	0.045	11.48	0.119	12.10	2.008	12.72	0.251
10.88	0.046	11.50	0.122	12.12	1.760	12.73	0.247
10.90	0.047	11.52	0.126	12.13	1.526	12.75	0.244
10.92	0.048	11.53	0.131	12.15	1.310	12.77	0.241
10.93	0.049	11.55	0.137	12.17	1.114	12.78	0.239
10.95	0.050	11.57	0.147	12.18	0.941	12.80	0.236
10.97	0.051	11.58	0.160	12.20	0.797	12.82	0.234
10.98	0.052	11.60	0.178	12.22	0.683	12.83	0.232
11.00	0.053	11.62	0.201	12.23	0.604	12.85	0.229
11.02	0.055	11.63	0.230	12.25	0.546	12.87	0.227
11.03	0.056	11.65	0.265	12.27	0.509	12.88	0.224
11.05	0.057	11.67	0.306	12.28	0.487	12.90	0.222
11.07	0.059	11.68	0.353	12.30	0.474	12.92	0.219
11.08	0.060	11.70	0.406	12.32	0.464	12.93	0.217
11.10	0.061	11.72	0.465	12.33	0.454	12.95	0.214
11.12	0.063	11.73	0.529	12.35	0.443	12.97	0.212
11.13	0.065	11.75	0.599	12.37	0.433	12.98	0.210
11.15	0.067	11.77	0.676	12.38	0.423	13.00	0.207
11.17	0.069	11.78	0.761	12.40	0.412	13.02	0.205
11.18	0.071	11.80	0.858	12.42	0.402	13.03	0.202

Continues on next page...

Mediterranean Rest. Post-Development

Hydrograph Discharge Table

Time (hrs)	Outflow (cfs)	Time (hrs)	Outflow (cfs)	Time (hrs)	Outflow (cfs)	Time (hrs)	Outflow (cfs)
13.05	0.200	13.93	0.128	14.82	0.103	15.70	0.084
13.07	0.197	13.95	0.127	14.83	0.102	15.72	0.084
13.08	0.195	13.97	0.126	14.85	0.102	15.73	0.083
13.10	0.193	13.98	0.125	14.87	0.101	15.75	0.083
13.12	0.191	14.00	0.124	14.88	0.101	15.77	0.082
13.13	0.189	14.02	0.123	14.90	0.101	15.78	0.082
13.15	0.187	14.03	0.122	14.92	0.100	15.80	0.082
13.17	0.185	14.05	0.122	14.93	0.100	15.82	0.081
13.18	0.184	14.07	0.121	14.95	0.100	15.83	0.081
13.20	0.182	14.08	0.120	14.97	0.099	15.85	0.081
13.22	0.180	14.10	0.119	14.98	0.099	15.87	0.080
13.23	0.179	14.12	0.118	15.00	0.099	15.88	0.080
13.25	0.178	14.13	0.117	15.02	0.098	15.90	0.080
13.27	0.176	14.15	0.117	15.03	0.098	15.92	0.079
13.28	0.175	14.17	0.116	15.05	0.098	15.93	0.079
13.30	0.173	14.18	0.116	15.07	0.097	15.95	0.078
13.32	0.172	14.20	0.115	15.08	0.097	15.97	0.078
13.33	0.171	14.22	0.115	15.10	0.097	15.98	0.078
13.35	0.169	14.23	0.114	15.12	0.096	16.00	0.077
13.37	0.168	14.25	0.114	15.13	0.096	16.02	0.077
13.38	0.167	14.27	0.114	15.15	0.096	16.03	0.077
13.40	0.165	14.28	0.113	15.17	0.095	16.05	0.076
13.42	0.164	14.30	0.113	15.18	0.095	16.07	0.076
13.43	0.163	14.32	0.113	15.20	0.095	16.08	0.076
13.45	0.161	14.33	0.112	15.22	0.094	16.10	0.075
13.47	0.160	14.35	0.112	15.23	0.094	16.12	0.075
13.48	0.159	14.37	0.112	15.25	0.093	16.13	0.075
13.50	0.157	14.38	0.111	15.27	0.093	16.15	0.075
13.52	0.156	14.40	0.111	15.28	0.093	16.17	0.074
13.53	0.155	14.42	0.111	15.30	0.092	16.18	0.074
13.55	0.153	14.43	0.110	15.32	0.092	16.20	0.074
13.57	0.152	14.45	0.110	15.33	0.092	16.22	0.074
13.58	0.151	14.47	0.110	15.35	0.091	16.23	0.074
13.60	0.149	14.48	0.109	15.37	0.091	16.25	0.074
13.62	0.148	14.50	0.109	15.38	0.091	16.27	0.073
13.63	0.147	14.52	0.109	15.40	0.090	16.28	0.073
13.65	0.146	14.53	0.108	15.42	0.090	16.30	0.073
13.67	0.145	14.55	0.108	15.43	0.090	16.32	0.073
13.68	0.144	14.57	0.108	15.45	0.089	16.33	0.073
13.70	0.142	14.58	0.107	15.47	0.089	16.35	0.073
13.72	0.141	14.60	0.107	15.48	0.089	16.37	0.073
13.73	0.140	14.62	0.107	15.50	0.088	16.38	0.073
13.75	0.139	14.63	0.106	15.52	0.088	16.40	0.072
13.77	0.138	14.65	0.106	15.53	0.087	16.42	0.072
13.78	0.137	14.67	0.106	15.55	0.087	16.43	0.072
13.80	0.136	14.68	0.105	15.57	0.087	16.45	0.072
13.82	0.135	14.70	0.105	15.58	0.086	16.47	0.072
13.83	0.134	14.72	0.105	15.60	0.086	16.48	0.072
13.85	0.133	14.73	0.104	15.62	0.086	16.50	0.072
13.87	0.132	14.75	0.104	15.63	0.085	16.52	0.072
13.88	0.131	14.77	0.104	15.65	0.085	16.53	0.072
13.90	0.130	14.78	0.103	15.67	0.085	16.55	0.071
13.92	0.129	14.80	0.103	15.68	0.084	16.57	0.071

Continues on next page...

Mediterranean Rest. Post-Development

Hydrograph Discharge Table

Time (hrs)	Outflow (cfs)	Time (hrs)	Outflow (cfs)	Time (hrs)	Outflow (cfs)	Time (hrs)	Outflow (cfs)
16.58	0.071	17.47	0.064	18.35	0.058	19.23	0.051
16.60	0.071	17.48	0.064	18.37	0.057	19.25	0.050
16.62	0.071	17.50	0.064	18.38	0.057	19.27	0.050
16.63	0.071	17.52	0.064	18.40	0.057	19.28	0.050
16.65	0.071	17.53	0.064	18.42	0.057	19.30	0.050
16.67	0.071	17.55	0.064	18.43	0.057	19.32	0.050
16.68	0.070	17.57	0.064	18.45	0.057	19.33	0.050
16.70	0.070	17.58	0.064	18.47	0.057	19.35	0.050
16.72	0.070	17.60	0.063	18.48	0.057	19.37	0.050
16.73	0.070	17.62	0.063	18.50	0.056	19.38	0.049
16.75	0.070	17.63	0.063	18.52	0.056	19.40	0.049
16.77	0.070	17.65	0.063	18.53	0.056	19.42	0.049
16.78	0.070	17.67	0.063	18.55	0.056	19.43	0.049
16.80	0.070	17.68	0.063	18.57	0.056	19.45	0.049
16.82	0.069	17.70	0.063	18.58	0.056	19.47	0.049
16.83	0.069	17.72	0.063	18.60	0.056	19.48	0.049
16.85	0.069	17.73	0.062	18.62	0.056	19.50	0.048
16.87	0.069	17.75	0.062	18.63	0.055	19.52	0.048
16.88	0.069	17.77	0.062	18.65	0.055	19.53	0.048
16.90	0.069	17.78	0.062	18.67	0.055	19.55	0.048
16.92	0.069	17.80	0.062	18.68	0.055	19.57	0.048
16.93	0.069	17.82	0.062	18.70	0.055	19.58	0.048
16.95	0.068	17.83	0.062	18.72	0.055	19.60	0.048
16.97	0.068	17.85	0.062	18.73	0.055	19.62	0.048
16.98	0.068	17.87	0.061	18.75	0.054	19.63	0.047
17.00	0.068	17.88	0.061	18.77	0.054	19.65	0.047
17.02	0.068	17.90	0.061	18.78	0.054	19.67	0.047
17.03	0.068	17.92	0.061	18.80	0.054	19.68	0.047
17.05	0.068	17.93	0.061	18.82	0.054	19.70	0.047
17.07	0.068	17.95	0.061	18.83	0.054	19.72	0.047
17.08	0.067	17.97	0.061	18.85	0.054	19.73	0.047
17.10	0.067	17.98	0.060	18.87	0.054	19.75	0.046
17.12	0.067	18.00	0.060	18.88	0.053	19.77	0.046
17.13	0.067	18.02	0.060	18.90	0.053	19.78	0.046
17.15	0.067	18.03	0.060	18.92	0.053	19.80	0.046
17.17	0.067	18.05	0.060	18.93	0.053	19.82	0.046
17.18	0.067	18.07	0.060	18.95	0.053	19.83	0.046
17.20	0.066	18.08	0.060	18.97	0.053	19.85	0.046
17.22	0.066	18.10	0.060	18.98	0.053	19.87	0.046
17.23	0.066	18.12	0.059	19.00	0.052	19.88	0.045
17.25	0.066	18.13	0.059	19.02	0.052	19.90	0.045
17.27	0.066	18.15	0.059	19.03	0.052	19.92	0.045
17.28	0.066	18.17	0.059	19.05	0.052	19.93	0.045
17.30	0.066	18.18	0.059	19.07	0.052	19.95	0.045
17.32	0.066	18.20	0.059	19.08	0.052	19.97	0.045
17.33	0.065	18.22	0.059	19.10	0.052	19.98	0.045
17.35	0.065	18.23	0.059	19.12	0.052	20.00	0.044
17.37	0.065	18.25	0.058	19.13	0.051	20.02	0.044
17.38	0.065	18.27	0.058	19.15	0.051	20.03	0.044
17.40	0.065	18.28	0.058	19.17	0.051	20.05	0.044
17.42	0.065	18.30	0.058	19.18	0.051	20.07	0.044
17.43	0.065	18.32	0.058	19.20	0.051	20.08	0.044
17.45	0.065	18.33	0.058	19.22	0.051	20.10	0.044

Continues on next page...

Mediterranean Rest. Post-Development

Hydrograph Discharge Table

Time (hrs)	Outflow (cfs)	Time (hrs)	Outflow (cfs)	Time (hrs)	Outflow (cfs)	Time (hrs)	Outflow (cfs)
20.12	0.044	21.00	0.042	21.88	0.041	22.77	0.039
20.13	0.044	21.02	0.042	21.90	0.041	22.78	0.039
20.15	0.043	21.03	0.042	21.92	0.041	22.80	0.039
20.17	0.043	21.05	0.042	21.93	0.041	22.82	0.039
20.18	0.043	21.07	0.042	21.95	0.041	22.83	0.039
20.20	0.043	21.08	0.042	21.97	0.041	22.85	0.039
20.22	0.043	21.10	0.042	21.98	0.041	22.87	0.039
20.23	0.043	21.12	0.042	22.00	0.041	22.88	0.039
20.25	0.043	21.13	0.042	22.02	0.041	22.90	0.039
20.27	0.043	21.15	0.042	22.03	0.041	22.92	0.039
20.28	0.043	21.17	0.042	22.05	0.041	22.93	0.039
20.30	0.043	21.18	0.042	22.07	0.040	22.95	0.039
20.32	0.043	21.20	0.042	22.08	0.040	22.97	0.039
20.33	0.043	21.22	0.042	22.10	0.040	22.98	0.039
20.35	0.043	21.23	0.042	22.12	0.040	23.00	0.039
20.37	0.043	21.25	0.042	22.13	0.040	23.02	0.039
20.38	0.043	21.27	0.042	22.15	0.040	23.03	0.039
20.40	0.043	21.28	0.042	22.17	0.040	23.05	0.039
20.42	0.043	21.30	0.042	22.18	0.040	23.07	0.039
20.43	0.043	21.32	0.042	22.20	0.040	23.08	0.039
20.45	0.043	21.33	0.042	22.22	0.040	23.10	0.039
20.47	0.043	21.35	0.042	22.23	0.040	23.12	0.039
20.48	0.043	21.37	0.042	22.25	0.040	23.13	0.039
20.50	0.043	21.38	0.042	22.27	0.040	23.15	0.039
20.52	0.043	21.40	0.041	22.28	0.040	23.17	0.039
20.53	0.043	21.42	0.041	22.30	0.040	23.18	0.039
20.55	0.043	21.43	0.041	22.32	0.040	23.20	0.039
20.57	0.043	21.45	0.041	22.33	0.040	23.22	0.039
20.58	0.043	21.47	0.041	22.35	0.040	23.23	0.039
20.60	0.043	21.48	0.041	22.37	0.040	23.25	0.039
20.62	0.043	21.50	0.041	22.38	0.040	23.27	0.039
20.63	0.043	21.52	0.041	22.40	0.040	23.28	0.039
20.65	0.043	21.53	0.041	22.42	0.040	23.30	0.039
20.67	0.043	21.55	0.041	22.43	0.040	23.32	0.039
20.68	0.043	21.57	0.041	22.45	0.040	23.33	0.039
20.70	0.043	21.58	0.041	22.47	0.040	23.35	0.039
20.72	0.043	21.60	0.041	22.48	0.040	23.37	0.039
20.73	0.042	21.62	0.041	22.50	0.040	23.38	0.038
20.75	0.042	21.63	0.041	22.52	0.040	23.40	0.038
20.77	0.042	21.65	0.041	22.53	0.040	23.42	0.038
20.78	0.042	21.67	0.041	22.55	0.040	23.43	0.038
20.80	0.042	21.68	0.041	22.57	0.040	23.45	0.038
20.82	0.042	21.70	0.041	22.58	0.040	23.47	0.038
20.83	0.042	21.72	0.041	22.60	0.040	23.48	0.038
20.85	0.042	21.73	0.041	22.62	0.040	23.50	0.038
20.87	0.042	21.75	0.041	22.63	0.040	23.52	0.038
20.88	0.042	21.77	0.041	22.65	0.040	23.53	0.038
20.90	0.042	21.78	0.041	22.67	0.040	23.55	0.038
20.92	0.042	21.80	0.041	22.68	0.040	23.57	0.038
20.93	0.042	21.82	0.041	22.70	0.040	23.58	0.038
20.95	0.042	21.83	0.041	22.72	0.040	23.60	0.038
20.97	0.042	21.85	0.041	22.73	0.039	23.62	0.038
20.98	0.042	21.87	0.041	22.75	0.039	23.63	0.038

Continues on next page...

Mediterranean Rest. Post-Development

Hydrograph Discharge Table

Time -- (hrs	Outflow cfs)
23.65	0.038
23.67	0.038
23.68	0.038
23.70	0.038
23.72	0.038
23.73	0.038
23.75	0.038
23.77	0.038
23.78	0.038
23.80	0.038
23.82	0.038
23.83	0.038
23.85	0.038
23.87	0.038
23.88	0.038
23.90	0.038
23.92	0.038
23.93	0.038
23.95	0.038
23.97	0.038
23.98	0.038
24.00	0.038
24.02	0.037
24.03	0.036
24.05	0.034
24.07	0.032

...End

10-Year Hydrograph

Hydrograph Report

Hydraflow Hydrographs Extension for AutoCAD® Civil 3D® 2008 by Autodesk, Inc. v6.049 Wednesday, Mar 18, 2009

Hyd. No. 1

Mediterranean Rest. Post-Development

Hydrograph type	= SCS Runoff	Peak discharge	= 8.770 cfs
Storm frequency	= 10 yrs	Time to peak	= 12.00 hrs
Time interval	= 1 min	Hyd. volume	= 21,649 cuft
Drainage area	= 1.500 ac	Curve number	= 83
Basin Slope	= 0.0 %	Hydraulic length	= 0 ft
Tc method	= TR55	Time of conc. (Tc)	= 10.9 min
Total precip.	= 5.80 in	Distribution	= Type II
Storm duration	= 24 hrs	Shape factor	= 484

Hydrograph Discharge Table

(Printed values >= 1.00% of Qp.)

Time -- Outflow (hrs cfs)		Time -- Outflow (hrs cfs)		Time -- Outflow (hrs cfs)		Time -- Outflow (hrs cfs)	
9.07	0.089	9.68	0.111	10.30	0.171	10.92	0.286
9.08	0.089	9.70	0.112	10.32	0.174	10.93	0.290
9.10	0.090	9.72	0.113	10.33	0.176	10.95	0.295
9.12	0.091	9.73	0.114	10.35	0.178	10.97	0.299
9.13	0.092	9.75	0.116	10.37	0.180	10.98	0.303
9.15	0.092	9.77	0.117	10.38	0.183	11.00	0.307
9.17	0.093	9.78	0.118	10.40	0.185	11.02	0.312
9.18	0.094	9.80	0.120	10.42	0.187	11.03	0.316
9.20	0.094	9.82	0.121	10.43	0.190	11.05	0.321
9.22	0.095	9.83	0.122	10.45	0.192	11.07	0.326
9.23	0.095	9.85	0.124	10.47	0.195	11.08	0.331
9.25	0.096	9.87	0.125	10.48	0.197	11.10	0.337
9.27	0.096	9.88	0.127	10.50	0.199	11.12	0.343
9.28	0.097	9.90	0.128	10.52	0.202	11.13	0.350
9.30	0.097	9.92	0.130	10.53	0.204	11.15	0.357
9.32	0.098	9.93	0.131	10.55	0.207	11.17	0.365
9.33	0.098	9.95	0.133	10.57	0.210	11.18	0.373
9.35	0.099	9.97	0.134	10.58	0.212	11.20	0.381
9.37	0.099	9.98	0.136	10.60	0.215	11.22	0.390
9.38	0.099	10.00	0.137	10.62	0.218	11.23	0.399
9.40	0.100	10.02	0.139	10.63	0.221	11.25	0.408
9.42	0.100	10.03	0.140	10.65	0.224	11.27	0.418
9.43	0.101	10.05	0.142	10.67	0.228	11.28	0.427
9.45	0.101	10.07	0.143	10.68	0.231	11.30	0.437
9.47	0.102	10.08	0.145	10.70	0.235	11.32	0.447
9.48	0.102	10.10	0.147	10.72	0.238	11.33	0.457
9.50	0.103	10.12	0.149	10.73	0.242	11.35	0.467
9.52	0.103	10.13	0.150	10.75	0.246	11.37	0.477
9.53	0.104	10.15	0.152	10.77	0.250	11.38	0.488
9.55	0.104	10.17	0.154	10.78	0.254	11.40	0.498
9.57	0.105	10.18	0.156	10.80	0.258	11.42	0.508
9.58	0.105	10.20	0.158	10.82	0.262	11.43	0.519
9.60	0.106	10.22	0.160	10.83	0.266	11.45	0.530
9.62	0.107	10.23	0.163	10.85	0.270	11.47	0.540
9.63	0.108	10.25	0.165	10.87	0.274	11.48	0.551
9.65	0.108	10.27	0.167	10.88	0.278	11.50	0.562
9.67	0.109	10.28	0.169	10.90	0.282	11.52	0.575

Continues on next page...

Mediterranean Rest. Post-Development

Hydrograph Discharge Table

Time -- Outflow (hrs cfs)		Time -- Outflow (hrs cfs)		Time -- Outflow (hrs cfs)		Time -- Outflow (hrs cfs)	
11.53	0.592	12.42	1.068	13.30	0.448	14.18	0.295
11.55	0.617	12.43	1.039	13.32	0.445	14.20	0.294
11.57	0.654	12.45	1.010	13.33	0.441	14.22	0.293
11.58	0.705	12.47	0.981	13.35	0.437	14.23	0.291
11.60	0.775	12.48	0.952	13.37	0.434	14.25	0.290
11.62	0.866	12.50	0.923	13.38	0.430	14.27	0.289
11.63	0.980	12.52	0.894	13.40	0.427	14.28	0.289
11.65	1.116	12.53	0.865	13.42	0.423	14.30	0.288
11.67	1.272	12.55	0.838	13.43	0.419	14.32	0.287
11.68	1.447	12.57	0.811	13.45	0.416	14.33	0.286
11.70	1.641	12.58	0.786	13.47	0.412	14.35	0.285
11.72	1.851	12.60	0.763	13.48	0.408	14.37	0.284
11.73	2.077	12.62	0.742	13.50	0.405	14.38	0.283
11.75	2.317	12.63	0.723	13.52	0.401	14.40	0.282
11.77	2.573	12.65	0.706	13.53	0.397	14.42	0.281
11.78	2.851	12.67	0.692	13.55	0.394	14.43	0.280
11.80	3.156	12.68	0.679	13.57	0.390	14.45	0.280
11.82	3.495	12.70	0.667	13.58	0.387	14.47	0.279
11.83	3.875	12.72	0.657	13.60	0.384	14.48	0.278
11.85	4.305	12.73	0.648	13.62	0.380	14.50	0.277
11.87	4.792	12.75	0.640	13.63	0.377	14.52	0.276
11.88	5.341	12.77	0.632	13.65	0.374	14.53	0.275
11.90	5.949	12.78	0.625	13.67	0.371	14.55	0.274
11.92	6.613	12.80	0.618	13.68	0.368	14.57	0.273
11.93	7.248	12.82	0.612	13.70	0.365	14.58	0.272
11.95	7.829	12.83	0.605	13.72	0.363	14.60	0.271
11.97	8.309	12.85	0.599	13.73	0.360	14.62	0.270
11.98	8.639	12.87	0.592	13.75	0.357	14.63	0.270
12.00	8.770 <<	12.88	0.585	13.77	0.355	14.65	0.269
12.02	8.669	12.90	0.579	13.78	0.352	14.67	0.268
12.03	8.313	12.92	0.572	13.80	0.349	14.68	0.267
12.05	7.811	12.93	0.565	13.82	0.347	14.70	0.266
12.07	7.174	12.95	0.559	13.83	0.344	14.72	0.265
12.08	6.453	12.97	0.552	13.85	0.342	14.73	0.264
12.10	5.698	12.98	0.545	13.87	0.339	14.75	0.263
12.12	4.962	13.00	0.539	13.88	0.336	14.77	0.262
12.13	4.273	13.02	0.532	13.90	0.334	14.78	0.261
12.15	3.642	13.03	0.525	13.92	0.331	14.80	0.260
12.17	3.076	13.05	0.519	13.93	0.328	14.82	0.260
12.18	2.583	13.07	0.512	13.95	0.326	14.83	0.259
12.20	2.172	13.08	0.506	13.97	0.323	14.85	0.258
12.22	1.851	13.10	0.500	13.98	0.321	14.87	0.257
12.23	1.631	13.12	0.495	14.00	0.318	14.88	0.256
12.25	1.471	13.13	0.490	14.02	0.315	14.90	0.255
12.27	1.368	13.15	0.485	14.03	0.313	14.92	0.254
12.28	1.306	13.17	0.480	14.05	0.310	14.93	0.253
12.30	1.269	13.18	0.475	14.07	0.308	14.95	0.252
12.32	1.241	13.20	0.471	14.08	0.306	14.97	0.251
12.33	1.212	13.22	0.467	14.10	0.303	14.98	0.250
12.35	1.183	13.23	0.463	14.12	0.301	15.00	0.249
12.37	1.155	13.25	0.459	14.13	0.300	15.02	0.249
12.38	1.126	13.27	0.455	14.15	0.298	15.03	0.248
12.40	1.097	13.28	0.452	14.17	0.296	15.05	0.247

Continues on next page...

Mediterranean Rest. Post-Development

Hydrograph Discharge Table

Time (hrs)	Outflow cfs)	Time (hrs)	Outflow cfs)	Time (hrs)	Outflow cfs)	Time (hrs)	Outflow cfs)
15.07	0.246	15.95	0.197	16.83	0.173	17.72	0.155
15.08	0.245	15.97	0.196	16.85	0.172	17.73	0.155
15.10	0.244	15.98	0.195	16.87	0.172	17.75	0.155
15.12	0.243	16.00	0.194	16.88	0.172	17.77	0.154
15.13	0.242	16.02	0.193	16.90	0.171	17.78	0.154
15.15	0.241	16.03	0.192	16.92	0.171	17.80	0.154
15.17	0.240	16.05	0.191	16.93	0.171	17.82	0.153
15.18	0.239	16.07	0.190	16.95	0.170	17.83	0.153
15.20	0.238	16.08	0.190	16.97	0.170	17.85	0.153
15.22	0.238	16.10	0.189	16.98	0.170	17.87	0.152
15.23	0.237	16.12	0.188	17.00	0.169	17.88	0.152
15.25	0.236	16.13	0.187	17.02	0.169	17.90	0.152
15.27	0.235	16.15	0.187	17.03	0.169	17.92	0.151
15.28	0.234	16.17	0.186	17.05	0.168	17.93	0.151
15.30	0.233	16.18	0.186	17.07	0.168	17.95	0.151
15.32	0.232	16.20	0.185	17.08	0.168	17.97	0.150
15.33	0.231	16.22	0.185	17.10	0.167	17.98	0.150
15.35	0.230	16.23	0.185	17.12	0.167	18.00	0.150
15.37	0.229	16.25	0.184	17.13	0.167	18.02	0.149
15.38	0.228	16.27	0.184	17.15	0.166	18.03	0.149
15.40	0.227	16.28	0.184	17.17	0.166	18.05	0.149
15.42	0.226	16.30	0.183	17.18	0.166	18.07	0.148
15.43	0.226	16.32	0.183	17.20	0.166	18.08	0.148
15.45	0.225	16.33	0.183	17.22	0.165	18.10	0.148
15.47	0.224	16.35	0.182	17.23	0.165	18.12	0.147
15.48	0.223	16.37	0.182	17.25	0.165	18.13	0.147
15.50	0.222	16.38	0.182	17.27	0.164	18.15	0.147
15.52	0.221	16.40	0.181	17.28	0.164	18.17	0.146
15.53	0.220	16.42	0.181	17.30	0.164	18.18	0.146
15.55	0.219	16.43	0.181	17.32	0.163	18.20	0.146
15.57	0.218	16.45	0.180	17.33	0.163	18.22	0.145
15.58	0.217	16.47	0.180	17.35	0.163	18.23	0.145
15.60	0.216	16.48	0.180	17.37	0.162	18.25	0.145
15.62	0.215	16.50	0.179	17.38	0.162	18.27	0.144
15.63	0.214	16.52	0.179	17.40	0.162	18.28	0.144
15.65	0.214	16.53	0.179	17.42	0.161	18.30	0.144
15.67	0.213	16.55	0.178	17.43	0.161	18.32	0.143
15.68	0.212	16.57	0.178	17.45	0.161	18.33	0.143
15.70	0.211	16.58	0.178	17.47	0.160	18.35	0.143
15.72	0.210	16.60	0.177	17.48	0.160	18.37	0.142
15.73	0.209	16.62	0.177	17.50	0.160	18.38	0.142
15.75	0.208	16.63	0.177	17.52	0.159	18.40	0.142
15.77	0.207	16.65	0.176	17.53	0.159	18.42	0.141
15.78	0.206	16.67	0.176	17.55	0.159	18.43	0.141
15.80	0.205	16.68	0.176	17.57	0.158	18.45	0.141
15.82	0.204	16.70	0.175	17.58	0.158	18.47	0.140
15.83	0.203	16.72	0.175	17.60	0.158	18.48	0.140
15.85	0.202	16.73	0.175	17.62	0.157	18.50	0.140
15.87	0.201	16.75	0.174	17.63	0.157	18.52	0.139
15.88	0.201	16.77	0.174	17.65	0.157	18.53	0.139
15.90	0.200	16.78	0.174	17.67	0.156	18.55	0.139
15.92	0.199	16.80	0.173	17.68	0.156	18.57	0.138
15.93	0.198	16.82	0.173	17.70	0.156	18.58	0.138

Continues on next page...

Mediterranean Rest. Post-Development

Hydrograph Discharge Table

Time (hrs)	Outflow cfs)	Time (hrs)	Outflow cfs)	Time (hrs)	Outflow cfs)	Time (hrs)	Outflow cfs)
18.60	0.138	19.48	0.120	20.37	0.106	21.25	0.102
18.62	0.137	19.50	0.119	20.38	0.106	21.27	0.102
18.63	0.137	19.52	0.119	20.40	0.106	21.28	0.102
18.65	0.137	19.53	0.119	20.42	0.105	21.30	0.102
18.67	0.136	19.55	0.118	20.43	0.105	21.32	0.102
18.68	0.136	19.57	0.118	20.45	0.105	21.33	0.102
18.70	0.136	19.58	0.118	20.47	0.105	21.35	0.102
18.72	0.135	19.60	0.117	20.48	0.105	21.37	0.102
18.73	0.135	19.62	0.117	20.50	0.105	21.38	0.102
18.75	0.135	19.63	0.117	20.52	0.105	21.40	0.102
18.77	0.134	19.65	0.116	20.53	0.105	21.42	0.102
18.78	0.134	19.67	0.116	20.55	0.105	21.43	0.101
18.80	0.134	19.68	0.116	20.57	0.105	21.45	0.101
18.82	0.133	19.70	0.115	20.58	0.105	21.47	0.101
18.83	0.133	19.72	0.115	20.60	0.105	21.48	0.101
18.85	0.133	19.73	0.115	20.62	0.105	21.50	0.101
18.87	0.132	19.75	0.114	20.63	0.105	21.52	0.101
18.88	0.132	19.77	0.114	20.65	0.105	21.53	0.101
18.90	0.132	19.78	0.114	20.67	0.105	21.55	0.101
18.92	0.131	19.80	0.113	20.68	0.104	21.57	0.101
18.93	0.131	19.82	0.113	20.70	0.104	21.58	0.101
18.95	0.131	19.83	0.113	20.72	0.104	21.60	0.101
18.97	0.130	19.85	0.112	20.73	0.104	21.62	0.101
18.98	0.130	19.87	0.112	20.75	0.104	21.63	0.101
19.00	0.130	19.88	0.112	20.77	0.104	21.65	0.101
19.02	0.129	19.90	0.111	20.78	0.104	21.67	0.101
19.03	0.129	19.92	0.111	20.80	0.104	21.68	0.101
19.05	0.129	19.93	0.111	20.82	0.104	21.70	0.100
19.07	0.128	19.95	0.110	20.83	0.104	21.72	0.100
19.08	0.128	19.97	0.110	20.85	0.104	21.73	0.100
19.10	0.128	19.98	0.110	20.87	0.104	21.75	0.100
19.12	0.127	20.00	0.109	20.88	0.104	21.77	0.100
19.13	0.127	20.02	0.109	20.90	0.104	21.78	0.100
19.15	0.127	20.03	0.109	20.92	0.104	21.80	0.100
19.17	0.126	20.05	0.108	20.93	0.103	21.82	0.100
19.18	0.126	20.07	0.108	20.95	0.103	21.83	0.100
19.20	0.126	20.08	0.108	20.97	0.103	21.85	0.100
19.22	0.125	20.10	0.107	20.98	0.103	21.87	0.100
19.23	0.125	20.12	0.107	21.00	0.103	21.88	0.100
19.25	0.125	20.13	0.107	21.02	0.103	21.90	0.100
19.27	0.124	20.15	0.107	21.03	0.103	21.92	0.100
19.28	0.124	20.17	0.107	21.05	0.103	21.93	0.100
19.30	0.124	20.18	0.107	21.07	0.103	21.95	0.099
19.32	0.123	20.20	0.106	21.08	0.103	21.97	0.099
19.33	0.123	20.22	0.106	21.10	0.103	21.98	0.099
19.35	0.122	20.23	0.106	21.12	0.103	22.00	0.099
19.37	0.122	20.25	0.106	21.13	0.103	22.02	0.099
19.38	0.122	20.27	0.106	21.15	0.103	22.03	0.099
19.40	0.121	20.28	0.106	21.17	0.103	22.05	0.099
19.42	0.121	20.30	0.106	21.18	0.102	22.07	0.099
19.43	0.121	20.32	0.106	21.20	0.102	22.08	0.099
19.45	0.120	20.33	0.106	21.22	0.102	22.10	0.099
19.47	0.120	20.35	0.106	21.23	0.102	22.12	0.099

Continues on next page...

Mediterranean Rest. Post-Development

Hydrograph Discharge Table

Time -- Outflow (hrs cfs)		Time -- Outflow (hrs cfs)		Time -- Outflow (hrs cfs)	
22.13	0.099	23.02	0.095	23.90	0.092
22.15	0.099	23.03	0.095	23.92	0.092
22.17	0.099	23.05	0.095	23.93	0.092
22.18	0.099	23.07	0.095	23.95	0.092
22.20	0.098	23.08	0.095	23.97	0.091
22.22	0.098	23.10	0.095	23.98	0.091
22.23	0.098	23.12	0.095	24.00	0.091
22.25	0.098	23.13	0.095	24.02	0.090
22.27	0.098	23.15	0.095		
22.28	0.098	23.17	0.095	*...End*	
22.30	0.098	23.18	0.095		
22.32	0.098	23.20	0.095		
22.33	0.098	23.22	0.094		
22.35	0.098	23.23	0.094		
22.37	0.098	23.25	0.094		
22.38	0.098	23.27	0.094		
22.40	0.098	23.28	0.094		
22.42	0.098	23.30	0.094		
22.43	0.098	23.32	0.094		
22.45	0.097	23.33	0.094		
22.47	0.097	23.35	0.094		
22.48	0.097	23.37	0.094		
22.50	0.097	23.38	0.094		
22.52	0.097	23.40	0.094		
22.53	0.097	23.42	0.094		
22.55	0.097	23.43	0.094		
22.57	0.097	23.45	0.094		
22.58	0.097	23.47	0.093		
22.60	0.097	23.48	0.093		
22.62	0.097	23.50	0.093		
22.63	0.097	23.52	0.093		
22.65	0.097	23.53	0.093		
22.67	0.097	23.55	0.093		
22.68	0.097	23.57	0.093		
22.70	0.096	23.58	0.093		
22.72	0.096	23.60	0.093		
22.73	0.096	23.62	0.093		
22.75	0.096	23.63	0.093		
22.77	0.096	23.65	0.093		
22.78	0.096	23.67	0.093		
22.80	0.096	23.68	0.093		
22.82	0.096	23.70	0.093		
22.83	0.096	23.72	0.092		
22.85	0.096	23.73	0.092		
22.87	0.096	23.75	0.092		
22.88	0.096	23.77	0.092		
22.90	0.096	23.78	0.092		
22.92	0.096	23.80	0.092		
22.93	0.096	23.82	0.092		
22.95	0.096	23.83	0.092		
22.97	0.095	23.85	0.092		
22.98	0.095	23.87	0.092		
23.00	0.095	23.88	0.092		

100-Year Hydrograph

Hydrograph Report

Hydraflow Hydrographs Extension for AutoCAD® Civil 3D® 2008 by Autodesk, Inc. v6.049 Wednesday, Mar 18, 2009

Hyd. No. 1

Mediterranean Rest. Post-Development

Hydrograph type	= SCS Runoff	Peak discharge	= 13.14 cfs
Storm frequency	= 100 yrs	Time to peak	= 12.00 hrs
Time interval	= 1 min	Hyd. volume	= 33,128 cuft
Drainage area	= 1.500 ac	Curve number	= 83
Basin Slope	= 0.0 %	Hydraulic length	= 0 ft
Tc method	= TR55	Time of conc. (Tc)	= 10.9 min
Total precip.	= 8.00 in	Distribution	= Type II
Storm duration	= 24 hrs	Shape factor	= 484

Hydrograph Discharge Table

(Printed values >= 1.00% of Qp.)

Time -- Outflow (hrs cfs)		Time -- Outflow (hrs cfs)		Time -- Outflow (hrs cfs)		Time -- Outflow (hrs cfs)	
8.53	0.132	9.15	0.185	9.77	0.221	10.38	0.330
8.55	0.134	9.17	0.186	9.78	0.224	10.40	0.334
8.57	0.135	9.18	0.187	9.80	0.226	10.42	0.338
8.58	0.136	9.20	0.187	9.82	0.228	10.43	0.341
8.60	0.138	9.22	0.188	9.83	0.231	10.45	0.345
8.62	0.139	9.23	0.189	9.85	0.233	10.47	0.349
8.63	0.141	9.25	0.190	9.87	0.235	10.48	0.353
8.65	0.142	9.27	0.190	9.88	0.238	10.50	0.357
8.67	0.143	9.28	0.191	9.90	0.240	10.52	0.361
8.68	0.145	9.30	0.191	9.92	0.243	10.53	0.365
8.70	0.146	9.32	0.192	9.93	0.245	10.55	0.369
8.72	0.148	9.33	0.193	9.95	0.248	10.57	0.373
8.73	0.149	9.35	0.193	9.97	0.250	10.58	0.377
8.75	0.150	9.37	0.194	9.98	0.253	10.60	0.382
8.77	0.152	9.38	0.194	10.00	0.255	10.62	0.387
8.78	0.153	9.40	0.195	10.02	0.258	10.63	0.392
8.80	0.155	9.42	0.196	10.03	0.260	10.65	0.397
8.82	0.156	9.43	0.196	10.05	0.263	10.67	0.402
8.83	0.158	9.45	0.197	10.07	0.265	10.68	0.408
8.85	0.159	9.47	0.197	10.08	0.268	10.70	0.414
8.87	0.161	9.48	0.198	10.10	0.271	10.72	0.420
8.88	0.162	9.50	0.199	10.12	0.274	10.73	0.426
8.90	0.164	9.52	0.199	10.13	0.277	10.75	0.432
8.92	0.165	9.53	0.200	10.15	0.280	10.77	0.438
8.93	0.167	9.55	0.200	10.17	0.283	10.78	0.444
8.95	0.168	9.57	0.201	10.18	0.286	10.80	0.451
8.97	0.170	9.58	0.202	10.20	0.290	10.82	0.457
8.98	0.171	9.60	0.203	10.22	0.293	10.83	0.464
9.00	0.173	9.62	0.204	10.23	0.297	10.85	0.470
9.02	0.174	9.63	0.206	10.25	0.300	10.87	0.477
9.03	0.176	9.65	0.207	10.27	0.304	10.88	0.483
9.05	0.177	9.67	0.209	10.28	0.308	10.90	0.490
9.07	0.179	9.68	0.211	10.30	0.311	10.92	0.496
9.08	0.180	9.70	0.213	10.32	0.315	10.93	0.503
9.10	0.181	9.72	0.215	10.33	0.319	10.95	0.510
9.12	0.183	9.73	0.217	10.35	0.322	10.97	0.516
9.13	0.184	9.75	0.219	10.37	0.326	10.98	0.523

Continues on next page...

Mediterranean Rest. Post-Development

Hydrograph Discharge Table

Time (hrs)	Outflow (cfs)	Time (hrs)	Outflow (cfs)	Time (hrs)	Outflow (cfs)	Time (hrs)	Outflow (cfs)
11.00	0.530	11.88	8.237	12.77	0.917	13.65	0.540
11.02	0.537	11.90	9.129	12.78	0.907	13.67	0.536
11.03	0.544	11.92	10.10	12.80	0.897	13.68	0.531
11.05	0.551	11.93	11.02	12.82	0.887	13.70	0.527
11.07	0.559	11.95	11.85	12.83	0.877	13.72	0.523
11.08	0.567	11.97	12.53	12.85	0.868	13.73	0.519
11.10	0.577	11.98	12.98	12.87	0.858	13.75	0.515
11.12	0.586	12.00	13.14 <<	12.88	0.848	13.77	0.512
11.13	0.597	12.02	12.96	12.90	0.838	13.78	0.508
11.15	0.609	12.03	12.40	12.92	0.829	13.80	0.504
11.17	0.621	12.05	11.62	12.93	0.819	13.82	0.500
11.18	0.634	12.07	10.66	12.95	0.809	13.83	0.496
11.20	0.647	12.08	9.567	12.97	0.799	13.85	0.493
11.22	0.661	12.10	8.434	12.98	0.790	13.87	0.489
11.23	0.675	12.12	7.332	13.00	0.780	13.88	0.485
11.25	0.690	12.13	6.303	13.02	0.770	13.90	0.481
11.27	0.705	12.15	5.363	13.03	0.760	13.92	0.477
11.28	0.720	12.17	4.521	13.05	0.751	13.93	0.474
11.30	0.736	12.18	3.789	13.07	0.742	13.95	0.470
11.32	0.752	12.20	3.181	13.08	0.733	13.97	0.466
11.33	0.767	12.22	2.709	13.10	0.724	13.98	0.462
11.35	0.783	12.23	2.383	13.12	0.716	14.00	0.458
11.37	0.799	12.25	2.148	13.13	0.708	14.02	0.455
11.38	0.815	12.27	1.997	13.15	0.701	14.03	0.451
11.40	0.832	12.28	1.906	13.17	0.694	14.05	0.447
11.42	0.848	12.30	1.851	13.18	0.688	14.07	0.444
11.43	0.864	12.32	1.809	13.20	0.681	14.08	0.440
11.45	0.881	12.33	1.767	13.22	0.675	14.10	0.437
11.47	0.897	12.35	1.725	13.23	0.670	14.12	0.434
11.48	0.914	12.37	1.682	13.25	0.664	14.13	0.432
11.50	0.931	12.38	1.640	13.27	0.659	14.15	0.429
11.52	0.950	12.40	1.598	13.28	0.653	14.17	0.427
11.53	0.978	12.42	1.555	13.30	0.648	14.18	0.425
11.55	1.018	12.43	1.513	13.32	0.643	14.20	0.423
11.57	1.076	12.45	1.470	13.33	0.637	14.22	0.422
11.58	1.159	12.47	1.428	13.35	0.632	14.23	0.420
11.60	1.270	12.48	1.385	13.37	0.627	14.25	0.418
11.62	1.416	12.50	1.342	13.38	0.622	14.27	0.417
11.63	1.598	12.52	1.300	13.40	0.616	14.28	0.416
11.65	1.815	12.53	1.258	13.42	0.611	14.30	0.414
11.67	2.063	12.55	1.217	13.43	0.606	14.32	0.413
11.68	2.341	12.57	1.178	13.45	0.600	14.33	0.412
11.70	2.646	12.58	1.142	13.47	0.595	14.35	0.410
11.72	2.975	12.60	1.108	13.48	0.590	14.37	0.409
11.73	3.327	12.62	1.077	13.50	0.585	14.38	0.408
11.75	3.699	12.63	1.050	13.52	0.579	14.40	0.406
11.77	4.093	12.65	1.026	13.53	0.574	14.42	0.405
11.78	4.518	12.67	1.004	13.55	0.569	14.43	0.404
11.80	4.981	12.68	0.985	13.57	0.564	14.45	0.402
11.82	5.493	12.70	0.968	13.58	0.559	14.47	0.401
11.83	6.063	12.72	0.953	13.60	0.554	14.48	0.400
11.85	6.703	12.73	0.940	13.62	0.549	14.50	0.398
11.87	7.426	12.75	0.928	13.63	0.544	14.52	0.397

Continues on next page...

Mediterranean Rest. Post-Development

Hydrograph Discharge Table

Time (hrs)	Outflow (cfs)	Time (hrs)	Outflow (cfs)	Time (hrs)	Outflow (cfs)	Time (hrs)	Outflow (cfs)
14.53	0.396	15.42	0.325	16.30	0.263	17.18	0.238
14.55	0.395	15.43	0.324	16.32	0.262	17.20	0.237
14.57	0.393	15.45	0.323	16.33	0.262	17.22	0.237
14.58	0.392	15.47	0.321	16.35	0.261	17.23	0.236
14.60	0.391	15.48	0.320	16.37	0.261	17.25	0.236
14.62	0.389	15.50	0.319	16.38	0.260	17.27	0.235
14.63	0.388	15.52	0.317	16.40	0.260	17.28	0.235
14.65	0.387	15.53	0.316	16.42	0.260	17.30	0.234
14.67	0.385	15.55	0.315	16.43	0.259	17.32	0.234
14.68	0.384	15.57	0.313	16.45	0.259	17.33	0.233
14.70	0.383	15.58	0.312	16.47	0.258	17.35	0.233
14.72	0.381	15.60	0.311	16.48	0.258	17.37	0.232
14.73	0.380	15.62	0.309	16.50	0.257	17.38	0.232
14.75	0.379	15.63	0.308	16.52	0.257	17.40	0.231
14.77	0.377	15.65	0.307	16.53	0.256	17.42	0.231
14.78	0.376	15.67	0.305	16.55	0.256	17.43	0.230
14.80	0.375	15.68	0.304	16.57	0.255	17.45	0.230
14.82	0.373	15.70	0.303	16.58	0.255	17.47	0.229
14.83	0.372	15.72	0.301	16.60	0.254	17.48	0.229
14.85	0.371	15.73	0.300	16.62	0.254	17.50	0.229
14.87	0.369	15.75	0.299	16.63	0.253	17.52	0.228
14.88	0.368	15.77	0.297	16.65	0.253	17.53	0.228
14.90	0.367	15.78	0.296	16.67	0.252	17.55	0.227
14.92	0.365	15.80	0.295	16.68	0.252	17.57	0.227
14.93	0.364	15.82	0.293	16.70	0.251	17.58	0.226
14.95	0.363	15.83	0.292	16.72	0.251	17.60	0.226
14.97	0.361	15.85	0.291	16.73	0.250	17.62	0.225
14.98	0.360	15.87	0.289	16.75	0.250	17.63	0.225
15.00	0.359	15.88	0.288	16.77	0.250	17.65	0.224
15.02	0.357	15.90	0.287	16.78	0.249	17.67	0.224
15.03	0.356	15.92	0.285	16.80	0.249	17.68	0.223
15.05	0.355	15.93	0.284	16.82	0.248	17.70	0.223
15.07	0.353	15.95	0.283	16.83	0.248	17.72	0.222
15.08	0.352	15.97	0.281	16.85	0.247	17.73	0.222
15.10	0.351	15.98	0.280	16.87	0.247	17.75	0.221
15.12	0.349	16.00	0.278	16.88	0.246	17.77	0.221
15.13	0.348	16.02	0.277	16.90	0.246	17.78	0.220
15.15	0.347	16.03	0.276	16.92	0.245	17.80	0.220
15.17	0.345	16.05	0.275	16.93	0.245	17.82	0.219
15.18	0.344	16.07	0.273	16.95	0.244	17.83	0.219
15.20	0.343	16.08	0.272	16.97	0.244	17.85	0.218
15.22	0.341	16.10	0.271	16.98	0.243	17.87	0.218
15.23	0.340	16.12	0.270	17.00	0.243	17.88	0.218
15.25	0.339	16.13	0.269	17.02	0.242	17.90	0.217
15.27	0.337	16.15	0.268	17.03	0.242	17.92	0.217
15.28	0.336	16.17	0.267	17.05	0.241	17.93	0.216
15.30	0.335	16.18	0.267	17.07	0.241	17.95	0.216
15.32	0.333	16.20	0.266	17.08	0.240	17.97	0.215
15.33	0.332	16.22	0.265	17.10	0.240	17.98	0.215
15.35	0.331	16.23	0.265	17.12	0.240	18.00	0.214
15.37	0.329	16.25	0.264	17.13	0.239	18.02	0.214
15.38	0.328	16.27	0.264	17.15	0.239	18.03	0.213
15.40	0.327	16.28	0.263	17.17	0.238	18.05	0.213

Continues on next page...

Mediterranean Rest. Post-Development

Hydrograph Discharge Table

Time (hrs	Outflow cfs)	Time (hrs	Outflow cfs)	Time (hrs	Outflow cfs)	Time (hrs	Outflow cfs)
18.07	0.212	18.95	0.187	19.83	0.161	20.72	0.149
18.08	0.212	18.97	0.186	19.85	0.161	20.73	0.149
18.10	0.211	18.98	0.186	19.87	0.160	20.75	0.149
18.12	0.211	19.00	0.185	19.88	0.160	20.77	0.149
18.13	0.210	19.02	0.185	19.90	0.159	20.78	0.149
18.15	0.210	19.03	0.184	19.92	0.159	20.80	0.148
18.17	0.209	19.05	0.184	19.93	0.158	20.82	0.148
18.18	0.209	19.07	0.183	19.95	0.158	20.83	0.148
18.20	0.208	19.08	0.183	19.97	0.157	20.85	0.148
18.22	0.208	19.10	0.182	19.98	0.157	20.87	0.148
18.23	0.207	19.12	0.182	20.00	0.156	20.88	0.148
18.25	0.207	19.13	0.181	20.02	0.156	20.90	0.148
18.27	0.206	19.15	0.181	20.03	0.155	20.92	0.148
18.28	0.206	19.17	0.180	20.05	0.155	20.93	0.148
18.30	0.205	19.18	0.180	20.07	0.154	20.95	0.148
18.32	0.205	19.20	0.179	20.08	0.154	20.97	0.148
18.33	0.205	19.22	0.179	20.10	0.154	20.98	0.147
18.35	0.204	19.23	0.178	20.12	0.153	21.00	0.147
18.37	0.204	19.25	0.178	20.13	0.153	21.02	0.147
18.38	0.203	19.27	0.178	20.15	0.153	21.03	0.147
18.40	0.203	19.28	0.177	20.17	0.152	21.05	0.147
18.42	0.202	19.30	0.177	20.18	0.152	21.07	0.147
18.43	0.202	19.32	0.176	20.20	0.152	21.08	0.147
18.45	0.201	19.33	0.176	20.22	0.152	21.10	0.147
18.47	0.201	19.35	0.175	20.23	0.152	21.12	0.147
18.48	0.200	19.37	0.175	20.25	0.152	21.13	0.147
18.50	0.200	19.38	0.174	20.27	0.152	21.15	0.146
18.52	0.199	19.40	0.174	20.28	0.151	21.17	0.146
18.53	0.199	19.42	0.173	20.30	0.151	21.18	0.146
18.55	0.198	19.43	0.173	20.32	0.151	21.20	0.146
18.57	0.198	19.45	0.172	20.33	0.151	21.22	0.146
18.58	0.197	19.47	0.172	20.35	0.151	21.23	0.146
18.60	0.197	19.48	0.171	20.37	0.151	21.25	0.146
18.62	0.196	19.50	0.171	20.38	0.151	21.27	0.146
18.63	0.196	19.52	0.170	20.40	0.151	21.28	0.146
18.65	0.195	19.53	0.170	20.42	0.151	21.30	0.146
18.67	0.195	19.55	0.169	20.43	0.151	21.32	0.146
18.68	0.194	19.57	0.169	20.45	0.150	21.33	0.145
18.70	0.194	19.58	0.168	20.47	0.150	21.35	0.145
18.72	0.193	19.60	0.168	20.48	0.150	21.37	0.145
18.73	0.193	19.62	0.167	20.50	0.150	21.38	0.145
18.75	0.192	19.63	0.167	20.52	0.150	21.40	0.145
18.77	0.192	19.65	0.166	20.53	0.150	21.42	0.145
18.78	0.192	19.67	0.166	20.55	0.150	21.43	0.145
18.80	0.191	19.68	0.165	20.57	0.150	21.45	0.145
18.82	0.191	19.70	0.165	20.58	0.150	21.47	0.145
18.83	0.190	19.72	0.164	20.60	0.150	21.48	0.145
18.85	0.190	19.73	0.164	20.62	0.150	21.50	0.144
18.87	0.189	19.75	0.163	20.63	0.149	21.52	0.144
18.88	0.189	19.77	0.163	20.65	0.149	21.53	0.144
18.90	0.188	19.78	0.163	20.67	0.149	21.55	0.144
18.92	0.188	19.80	0.162	20.68	0.149	21.57	0.144
18.93	0.187	19.82	0.162	20.70	0.149	21.58	0.144

Continues on next page...

Mediterranean Rest. Post-Development

Hydrograph Discharge Table

Time (hrs	Outflow cfs)	Time (hrs	Outflow cfs)	Time (hrs	Outflow cfs)
21.60	0.144	22.48	0.139	23.37	0.134
21.62	0.144	22.50	0.139	23.38	0.134
21.63	0.144	22.52	0.139	23.40	0.134
21.65	0.144	22.53	0.139	23.42	0.134
21.67	0.144	22.55	0.138	23.43	0.133
21.68	0.143	22.57	0.138	23.45	0.133
21.70	0.143	22.58	0.138	23.47	0.133
21.72	0.143	22.60	0.138	23.48	0.133
21.73	0.143	22.62	0.138	23.50	0.133
21.75	0.143	22.63	0.138	23.52	0.133
21.77	0.143	22.65	0.138	23.53	0.133
21.78	0.143	22.67	0.138	23.55	0.133
21.80	0.143	22.68	0.138	23.57	0.133
21.82	0.143	22.70	0.138	23.58	0.133
21.83	0.143	22.72	0.138	23.60	0.132
21.85	0.142	22.73	0.137	23.62	0.132
21.87	0.142	22.75	0.137	23.63	0.132
21.88	0.142	22.77	0.137	23.65	0.132
21.90	0.142	22.78	0.137	23.67	0.132
21.92	0.142	22.80	0.137	23.68	0.132
21.93	0.142	22.82	0.137	23.70	0.132
21.95	0.142	22.83	0.137	23.72	0.132
21.97	0.142	22.85	0.137	23.73	0.132
21.98	0.142	22.87	0.137	23.75	0.132
22.00	0.142	22.88	0.137	23.77	0.131
22.02	0.142	22.90	0.136		
22.03	0.141	22.92	0.136	*...End*	
22.05	0.141	22.93	0.136		
22.07	0.141	22.95	0.136		
22.08	0.141	22.97	0.136		
22.10	0.141	22.98	0.136		
22.12	0.141	23.00	0.136		
22.13	0.141	23.02	0.136		
22.15	0.141	23.03	0.136		
22.17	0.141	23.05	0.136		
22.18	0.141	23.07	0.136		
22.20	0.140	23.08	0.135		
22.22	0.140	23.10	0.135		
22.23	0.140	23.12	0.135		
22.25	0.140	23.13	0.135		
22.27	0.140	23.15	0.135		
22.28	0.140	23.17	0.135		
22.30	0.140	23.18	0.135		
22.32	0.140	23.20	0.135		
22.33	0.140	23.22	0.135		
22.35	0.140	23.23	0.135		
22.37	0.140	23.25	0.134		
22.38	0.139	23.27	0.134		
22.40	0.139	23.28	0.134		
22.42	0.139	23.30	0.134		
22.43	0.139	23.32	0.134		
22.45	0.139	23.33	0.134		
22.47	0.139	23.35	0.134		

LandTech Resources, Inc.
Surveying • Engineering • GPS
201 Bulifants Blvd., Suite A, Williamsburg, VA 23188
Phone: (757) 565-1677 Fax: (757) 565-0782
web: landtechresources.com

PROJECT NAME Mediterranean Rest.
PROJECT NO. 08-230
SHEET NO. OF
CALCULATED BY KMJ DATE 3/23/09
SCALE

BMP DETENTION BASIN
STAGE - STORAGE

ELEV (ft)	ΔELEV (ft)	SA (sf)	STORAGE (cf)	ACCUM STORAGE (cf)
23.0		376		0
	1.0		514	
24.0		652		514
	1.0		817	
25.0		982		1331
	1.0		1175	
26.0		1368		2506
	1.0		1584	
27.0		1800		4090
	1.0		2035	
28.0		2270		6125
	1.0		2525	
29.0		2780		8650
	1.0		3055	
30.0		3330		11,705

Water Quality Volume of 2,287 cf rises to Elev 25.81

1-year storm Volume of 7,135 cf rises to Elev 28.40

LandTech Resources, Inc.
Surveying • Engineering • GPS
201 Bulifants Blvd., Suite A, Williamsburg, VA 23188
Phone: (757) 565-1677 Fax: (757) 565-0782
web: landtechresources.com

PROJECT NAME Mediterranean Rest
PROJECT NO. 08-230
SHEET NO. OF
CALCULATED BY KMT DATE 3/23/09
SCALE

DESIGN ORIFICE TO PASS 1-YEAR POST-DEVELOPMENT STORM OVER 24 HOURS

$$Q_{24} = \frac{7{,}135\,cf}{24\,hr} \cdot \frac{1\,hr}{60\,m} \cdot \frac{1\,m}{60\,s} = .08\ cfs$$

$Q = 0.6A\sqrt{2gh}$ — orifice equation

$h = 28.40 - 24.00 = 4.40'$

$0.08 = 0.6A\sqrt{2(32.2)(4.4)}$

$A = \pi r^2 = .0079\ ft^2$

$r = .0502'$

USE 2" DIAMETER ORIFICE AT ELEV 24.00, A = .0218 ft

LandTech Resources, Inc.
Surveying • Engineering • GPS
201 Bulifants Blvd., Suite A, Williamsburg, VA 23188
Phone: (757) 565-1677 Fax: (757) 565-0782
web: landtechresources.com

PROJECT NAME Mediterranean Rest
PROJECT NO. 08-230
SHEET NO. OF
CALCULATED BY KMJ DATE 3/23/09
SCALE

ANTIFLOTATION CALCULATIONS

Volume Inside Riser: $V_B = \pi \times 1.25' \times 1.25' \times 5.4' = 26.51\ ft^3$

Bouyant Force: $F_B = \gamma_w \times V_B = 62.4\ lb/ft^3 \times 26.51\ ft^3 = \boxed{1{,}655\ lb}$

Weight of Concrete Pad $(L \times W \times H)\gamma_{conc} =$
$(6' \times 6' \times 1.5')(150\ lb/ft^3 - 62.4\ lb/ft^3) = 4{,}730\ lb$

Weight of Riser: $(5.4\ ft)(390\ lb/ft) = 2106\ lb$

Weight of Anti-Vortex Cap $= (2.2\ tons)(2000\ lb/t) = 4{,}400\ lb$

Resisting Force: $F_R = 4{,}730\ lb + 2106\ lb + 4400\ lb = \boxed{11{,}236\ lb}$

Factor of Safety $= \dfrac{\text{Resisting}}{\text{Bouyant}} = \dfrac{11{,}236\ lb}{1{,}655\ lb} = 6.8$

FS = 6.8

LandTech
Resources, Inc.
Surveying • Engineering • GPS
201 Bulifants Blvd., Suite A, Williamsburg, VA 23188
Phone: (757) 565-1677 Fax: (757) 565-0782
web: landtechresources.com

PROJECT NAME Mediterranean Rest.
PROJECT NO. 08-230
SHEET NO. OF
CALCULATED BY KMJ DATE 3/24/09
SCALE

DESIGN SEDIMENT FOREBAY

Treatment Volume = 0.1 inches per impervious acre

Impervious Area = 0.63 ac = 27,443 sf

Forebay Volume = $\frac{27{,}443\ sf \mid 0.1\ in \mid 1\ ft}{\mid \mid 12\ in}$ = 229 cf

LandTech
Resources, Inc.
Surveying • Engineering • GPS
201 Bulifants Blvd., Suite A, Williamsburg, VA 23188
Phone: (757) 565-1677 Fax: (757) 565-0782
web: landtechresources.com

PROJECT NAME Mediterranean Rest.
PROJECT NO. 08-230
SHEET NO. OF
CALCULATED BY KMJ DATE 3/25/09
SCALE

Anti-Seep Collar Design

23. Depth of water at principal spillway crest (Y) = 5.4 ft.

Slope of upstream face of embankment (Z) = 2.5 :1.

Slope of principal spillway barrel (S_b) = 0.5 %

Length of barrel in saturated zone (L_s) = 40 ft.

24. Number of collars required = 1 dimensions = 6'x6'

(from Plate 3.14-12).

10–Year Routing

Hydrograph Report

Hydraflow Hydrographs Extension for AutoCAD® Civil 3D® 2008 by Autodesk, Inc. v6.049 Monday, Mar 23, 2009

Hyd. No. 2

Post-Development

Hydrograph type	= Reservoir	Peak discharge	= 6.335 cfs
Storm frequency	= 10 yrs	Time to peak	= 725 min
Time interval	= 1 min	Hyd. volume	= 21,645 cuft
Inflow hyd. No.	= 1 - Mediterranean Rest. Post-Development	Reservoir name	= Detention Pond
Max. Elevation	= 28.78 ft	Max. Storage	= 8,091 cuft

Storage Indication method used.

Hydrograph Discharge Table

(Printed values >= 1.00% of Qp. Print interval = 10)

Time (min)	Inflow cfs	Elevation ft	Clv A cfs	Clv B cfs	Clv C cfs	PfRsr cfs	Wr A cfs	Wr B cfs	Wr C cfs	Wr D cfs	Exfil cfs	Outflow cfs
580	0.109	23.50	0.073	0.066	-----	-----	-----	-----	-----	-----	-----	0.066
590	0.122	23.56	0.073	0.071	-----	-----	-----	-----	-----	-----	-----	0.071
600	0.137	23.62	0.076	0.076	-----	-----	-----	-----	-----	-----	-----	0.076
610	0.154	23.70	0.083	0.081	-----	-----	-----	-----	-----	-----	-----	0.081
620	0.176	23.80	0.093	0.087	-----	-----	-----	-----	-----	-----	-----	0.087
630	0.199	23.91	0.095	0.094	-----	-----	-----	-----	-----	-----	-----	0.094
640	0.228	24.03	0.105	0.100	-----	-----	-----	-----	-----	-----	-----	0.100
650	0.266	24.13	0.110	0.105	-----	-----	-----	-----	-----	-----	-----	0.105
660	0.307	24.26	0.118	0.112	-----	-----	-----	-----	-----	-----	-----	0.112
670	0.365	24.42	0.122	0.119	-----	-----	-----	-----	-----	-----	-----	0.119
680	0.457	24.63	0.133	0.128	-----	-----	-----	-----	-----	-----	-----	0.128
690	0.562	24.91	0.148	0.139	-----	-----	-----	-----	-----	-----	-----	0.139
700	1.272	25.26	0.159	0.152	-----	-----	-----	-----	-----	-----	-----	0.152
710	3.875	26.30	0.186	0.186	-----	-----	-----	-----	-----	-----	-----	0.186
720	8.770 <<	28.26	0.244	0.236	-----	-----	-----	-----	-----	-----	-----	0.236
730	3.076	28.68	4.210	0.225	-----	-----	3.963	-----	-----	-----	-----	4.188
740	1.212	28.52	1.451	0.235	-----	-----	1.182	-----	-----	-----	-----	1.417
750	0.923	28.50	1.053	0.236	-----	-----	0.792	-----	-----	-----	-----	1.029
760	0.692	28.47	0.815	0.237	-----	-----	0.559	-----	-----	-----	-----	0.797
770	0.605	28.45	0.668	0.238	-----	-----	0.416	-----	-----	-----	-----	0.654
780	0.539	28.44	0.587	0.238	-----	-----	0.336	-----	-----	-----	-----	0.575
790	0.480	28.43	0.520	0.239	-----	-----	0.270	-----	-----	-----	-----	0.509
800	0.441	28.43	0.471	0.239	-----	-----	0.223	-----	-----	-----	-----	0.462
810	0.405	28.42	0.432	0.239	-----	-----	0.185	-----	-----	-----	-----	0.424
820	0.371	28.42	0.396	0.239	-----	-----	0.149	-----	-----	-----	-----	0.388
830	0.344	28.41	0.365	0.239	-----	-----	0.119	-----	-----	-----	-----	0.358
840	0.318	28.41	0.338	0.239	-----	-----	0.092	-----	-----	-----	-----	0.331
850	0.296	28.41	0.313	0.239	-----	-----	0.067	-----	-----	-----	-----	0.307
860	0.286	28.41	0.297	0.240	-----	-----	0.052	-----	-----	-----	-----	0.292
870	0.277	28.41	0.287	0.240	-----	-----	0.042	-----	-----	-----	-----	0.282
880	0.268	28.40	0.277	0.240	-----	-----	0.033	-----	-----	-----	-----	0.272
890	0.259	28.40	0.268	0.240	-----	-----	0.024	-----	-----	-----	-----	0.263
900	0.249	28.40	0.259	0.240	-----	-----	0.014	-----	-----	-----	-----	0.254
910	0.240	28.40	0.249	0.240	-----	-----	0.005	-----	-----	-----	-----	0.245
920	0.231	28.40	0.244	0.240	-----	-----	-----	-----	-----	-----	-----	0.240
930	0.222	28.40	0.244	0.240	-----	-----	-----	-----	-----	-----	-----	0.240
940	0.213	28.39	0.244	0.240	-----	-----	-----	-----	-----	-----	-----	0.240
950	0.203	28.38	0.244	0.239	-----	-----	-----	-----	-----	-----	-----	0.239
960	0.194	28.37	0.244	0.239	-----	-----	-----	-----	-----	-----	-----	0.239
970	0.186	28.36	0.244	0.239	-----	-----	-----	-----	-----	-----	-----	0.239

Continues on next page...

Post-Development

Hydrograph Discharge Table

Time (min)	Inflow cfs	Elevation ft	Clv A cfs	Clv B cfs	Clv C cfs	PfRsr cfs	Wr A cfs	Wr B cfs	Wr C cfs	Wr D cfs	Exfil cfs	Outflow cfs
980	0.183	28.35	0.244	0.239	-----	-----	-----	-----	-----	-----	-----	0.239
990	0.179	28.34	0.244	0.238	-----	-----	-----	-----	-----	-----	-----	0.238
1000	0.176	28.32	0.244	0.238	-----	-----	-----	-----	-----	-----	-----	0.238
1010	0.173	28.31	0.244	0.238	-----	-----	-----	-----	-----	-----	-----	0.238
1020	0.169	28.29	0.244	0.237	-----	-----	-----	-----	-----	-----	-----	0.237
1030	0.166	28.27	0.244	0.237	-----	-----	-----	-----	-----	-----	-----	0.237
1040	0.163	28.26	0.244	0.236	-----	-----	-----	-----	-----	-----	-----	0.236
1050	0.160	28.24	0.244	0.236	-----	-----	-----	-----	-----	-----	-----	0.236
1060	0.156	28.22	0.244	0.236	-----	-----	-----	-----	-----	-----	-----	0.236
1070	0.153	28.20	0.244	0.235	-----	-----	-----	-----	-----	-----	-----	0.235
1080	0.150	28.18	0.244	0.235	-----	-----	-----	-----	-----	-----	-----	0.235
1090	0.146	28.16	0.244	0.234	-----	-----	-----	-----	-----	-----	-----	0.234
1100	0.143	28.14	0.244	0.234	-----	-----	-----	-----	-----	-----	-----	0.234
1110	0.140	28.12	0.244	0.233	-----	-----	-----	-----	-----	-----	-----	0.233
1120	0.136	28.10	0.244	0.233	-----	-----	-----	-----	-----	-----	-----	0.233
1130	0.133	28.07	0.244	0.232	-----	-----	-----	-----	-----	-----	-----	0.232
1140	0.130	28.05	0.244	0.231	-----	-----	-----	-----	-----	-----	-----	0.231
1150	0.126	28.02	0.244	0.231	-----	-----	-----	-----	-----	-----	-----	0.231
1160	0.123	28.00	0.244	0.230	-----	-----	-----	-----	-----	-----	-----	0.230
1170	0.119	27.97	0.244	0.230	-----	-----	-----	-----	-----	-----	-----	0.230
1180	0.116	27.93	0.244	0.229	-----	-----	-----	-----	-----	-----	-----	0.229
1190	0.113	27.90	0.244	0.228	-----	-----	-----	-----	-----	-----	-----	0.228
1200	0.109	27.87	0.237	0.227	-----	-----	-----	-----	-----	-----	-----	0.227
1210	0.107	27.83	0.231	0.226	-----	-----	-----	-----	-----	-----	-----	0.226
1220	0.106	27.79	0.225	0.225	-----	-----	-----	-----	-----	-----	-----	0.225
1230	0.105	27.76	0.225	0.225	-----	-----	-----	-----	-----	-----	-----	0.225
1240	0.105	27.72	0.224	0.224	-----	-----	-----	-----	-----	-----	-----	0.224
1250	0.104	27.69	0.223	0.223	-----	-----	-----	-----	-----	-----	-----	0.223
1260	0.103	27.65	0.223	0.222	-----	-----	-----	-----	-----	-----	-----	0.222
1270	0.103	27.62	0.222	0.221	-----	-----	-----	-----	-----	-----	-----	0.221
1280	0.102	27.58	0.222	0.220	-----	-----	-----	-----	-----	-----	-----	0.220
1290	0.101	27.55	0.222	0.219	-----	-----	-----	-----	-----	-----	-----	0.219
1300	0.101	27.51	0.222	0.219	-----	-----	-----	-----	-----	-----	-----	0.219
1310	0.100	27.48	0.222	0.218	-----	-----	-----	-----	-----	-----	-----	0.218
1320	0.099	27.44	0.222	0.217	-----	-----	-----	-----	-----	-----	-----	0.217
1330	0.099	27.41	0.222	0.216	-----	-----	-----	-----	-----	-----	-----	0.216
1340	0.098	27.38	0.222	0.215	-----	-----	-----	-----	-----	-----	-----	0.215
1350	0.097	27.34	0.222	0.214	-----	-----	-----	-----	-----	-----	-----	0.214
1360	0.097	27.31	0.222	0.213	-----	-----	-----	-----	-----	-----	-----	0.213
1370	0.096	27.27	0.222	0.212	-----	-----	-----	-----	-----	-----	-----	0.212
1380	0.095	27.24	0.222	0.212	-----	-----	-----	-----	-----	-----	-----	0.212
1390	0.095	27.20	0.222	0.211	-----	-----	-----	-----	-----	-----	-----	0.211
1400	0.094	27.17	0.222	0.210	-----	-----	-----	-----	-----	-----	-----	0.210
1410	0.093	27.14	0.222	0.209	-----	-----	-----	-----	-----	-----	-----	0.209
1420	0.093	27.10	0.222	0.208	-----	-----	-----	-----	-----	-----	-----	0.208
1430	0.092	27.07	0.217	0.207	-----	-----	-----	-----	-----	-----	-----	0.207
1440	0.091	27.03	0.211	0.206	-----	-----	-----	-----	-----	-----	-----	0.206
1450	0.029	26.99	0.205	0.205	-----	-----	-----	-----	-----	-----	-----	0.205
1460	0.000	26.92	0.203	0.203	-----	-----	-----	-----	-----	-----	-----	0.203
1470	0.000	26.84	0.202	0.201	-----	-----	-----	-----	-----	-----	-----	0.201
1480	0.000	26.76	0.201	0.199	-----	-----	-----	-----	-----	-----	-----	0.199
1490	0.000	26.69	0.201	0.197	-----	-----	-----	-----	-----	-----	-----	0.197
1500	0.000	26.61	0.201	0.195	-----	-----	-----	-----	-----	-----	-----	0.195
1510	0.000	26.54	0.201	0.193	-----	-----	-----	-----	-----	-----	-----	0.193

Continues on next page...

Post-Development

Hydrograph Discharge Table

Time (min)	Inflow cfs	Elevation ft	Clv A cfs	Clv B cfs	Clv C cfs	PfRsr cfs	Wr A cfs	Wr B cfs	Wr C cfs	Wr D cfs	Exfil cfs	Outflow cfs
1520	0.000	26.47	0.201	0.191	-----	-----	-----	-----	-----	-----	-----	0.191
1530	0.000	26.40	0.201	0.189	-----	-----	-----	-----	-----	-----	-----	0.189
1540	0.000	26.33	0.190	0.187	-----	-----	-----	-----	-----	-----	-----	0.187
1550	0.000	26.26	0.185	0.185	-----	-----	-----	-----	-----	-----	-----	0.185
1560	0.000	26.19	0.183	0.183	-----	-----	-----	-----	-----	-----	-----	0.183
1570	0.000	26.12	0.182	0.180	-----	-----	-----	-----	-----	-----	-----	0.180
1580	0.000	26.05	0.182	0.178	-----	-----	-----	-----	-----	-----	-----	0.178
1590	0.000	25.98	0.182	0.176	-----	-----	-----	-----	-----	-----	-----	0.176
1600	0.000	25.89	0.182	0.173	-----	-----	-----	-----	-----	-----	-----	0.173
1610	0.000	25.80	0.182	0.170	-----	-----	-----	-----	-----	-----	-----	0.170
1620	0.000	25.71	0.169	0.168	-----	-----	-----	-----	-----	-----	-----	0.168
1630	0.000	25.63	0.165	0.165	-----	-----	-----	-----	-----	-----	-----	0.165
1640	0.000	25.54	0.164	0.162	-----	-----	-----	-----	-----	-----	-----	0.162
1650	0.000	25.46	0.164	0.159	-----	-----	-----	-----	-----	-----	-----	0.159
1660	0.000	25.38	0.164	0.157	-----	-----	-----	-----	-----	-----	-----	0.157
1670	0.000	25.30	0.164	0.154	-----	-----	-----	-----	-----	-----	-----	0.154
1680	0.000	25.22	0.154	0.151	-----	-----	-----	-----	-----	-----	-----	0.151
1690	0.000	25.15	0.149	0.148	-----	-----	-----	-----	-----	-----	-----	0.148
1700	0.000	25.07	0.148	0.146	-----	-----	-----	-----	-----	-----	-----	0.146
1710	0.000	25.00	0.148	0.143	-----	-----	-----	-----	-----	-----	-----	0.143
1720	0.000	24.89	0.147	0.139	-----	-----	-----	-----	-----	-----	-----	0.139
1730	0.000	24.79	0.135	0.135	-----	-----	-----	-----	-----	-----	-----	0.135
1740	0.000	24.70	0.133	0.131	-----	-----	-----	-----	-----	-----	-----	0.131
1750	0.000	24.60	0.133	0.127	-----	-----	-----	-----	-----	-----	-----	0.127
1760	0.000	24.51	0.133	0.123	-----	-----	-----	-----	-----	-----	-----	0.123
1770	0.000	24.42	0.121	0.119	-----	-----	-----	-----	-----	-----	-----	0.119
1780	0.000	24.33	0.118	0.115	-----	-----	-----	-----	-----	-----	-----	0.115
1790	0.000	24.25	0.118	0.111	-----	-----	-----	-----	-----	-----	-----	0.111
1800	0.000	24.17	0.115	0.107	-----	-----	-----	-----	-----	-----	-----	0.107
1810	0.000	24.09	0.105	0.103	-----	-----	-----	-----	-----	-----	-----	0.103
1820	0.000	24.02	0.105	0.099	-----	-----	-----	-----	-----	-----	-----	0.099
1830	0.000	23.92	0.096	0.094	-----	-----	-----	-----	-----	-----	-----	0.094
1840	0.000	23.81	0.093	0.088	-----	-----	-----	-----	-----	-----	-----	0.088
1850	0.000	23.71	0.084	0.082	-----	-----	-----	-----	-----	-----	-----	0.082
1860	0.000	23.62	0.076	0.075	-----	-----	-----	-----	-----	-----	-----	0.075
1870	0.000	23.54	0.073	0.069	-----	-----	-----	-----	-----	-----	-----	0.069

...End

Pond Report

Hydraflow Hydrographs Extension for AutoCAD® Civil 3D® 2008 by Autodesk, Inc. v6.049 Monday, Mar 23, 2009

Pond No. 1 - Detention Pond

Pond Data

Contours - User-defined contour areas. Average end area method used for volume calculation. Begining Elevation = 23.00 ft

Stage / Storage Table

Stage (ft)	Elevation (ft)	Contour area (sqft)	Incr. Storage (cuft)	Total storage (cuft)
0.00	23.00	376	0	0
1.00	24.00	652	514	514
2.00	25.00	982	817	1,331
3.00	26.00	1,368	1,175	2,506
4.00	27.00	1,800	1,584	4,090
5.00	28.00	2,270	2,035	6,125
6.00	29.00	2,780	2,525	8,650
7.00	30.00	3,330	3,055	11,705

Culvert / Orifice Structures

	[A]	[B]	[C]	[PrfRsr]
Rise (in)	= 24.00	2.00	0.00	0.00
Span (in)	= 24.00	2.00	0.00	0.00
No. Barrels	= 1	1	0	0
Invert El. (ft)	= 23.00	23.00	0.00	0.00
Length (ft)	= 31.00	0.00	0.00	0.00
Slope (%)	= 0.50	0.00	0.00	n/a
N-Value	= .013	.013	.013	n/a
Orifice Coeff.	= 0.60	0.60	0.60	0.60
Multi-Stage	= n/a	Yes	No	No

Weir Structures

	[A]	[B]	[C]	[D]
Crest Len (ft)	= 7.85	5.00	0.00	0.00
Crest El. (ft)	= 28.40	28.80	0.00	0.00
Weir Coeff.	= 3.33	3.33	3.33	3.33
Weir Type	= Riser	Ciplti	---	---
Multi-Stage	= Yes	No	No	No

Exfil.(in/hr) = 0.000 (by Wet area)
TW Elev. (ft) = 0.00

Note: Culvert/Orifice outflows are analyzed under inlet (ic) and outlet (oc) control. Weir risers checked for orifice conditions (ic) and submergence (s).

Stage / Storage / Discharge Table

Stage ft	Storage cuft	Elevation ft	Clv A cfs	Clv B cfs	Clv C cfs	PrfRsr cfs	Wr A cfs	Wr B cfs	Wr C cfs	Wr D cfs	Exfil cfs	User cfs	Total cfs
0.00	0	23.00	0.00	0.00	---	---	0.00	0.00	---	---	---	---	0.000
1.00	514	24.00	0.11 ic	0.10 ic	---	---	0.00	0.00	---	---	---	---	0.098
2.00	1,331	25.00	0.15 ic	0.14 ic	---	---	0.00	0.00	---	---	---	---	0.143
3.00	2,506	26.00	0.18 ic	0.18 ic	---	---	0.00	0.00	---	---	---	---	0.177
4.00	4,090	27.00	0.21 ic	0.21 ic	---	---	0.00	0.00	---	---	---	---	0.205
5.00	6,125	28.00	0.24 ic	0.23 ic	---	---	0.00	0.00	---	---	---	---	0.230
6.00	8,650	29.00	12.35 oc	0.20 ic	---	---	12.15	1.49	---	---	---	---	13.84
7.00	11,705	30.00	26.37 ic	0.18 ic	---	---	26.19 ic	21.89	---	---	---	---	48.26

100–Year Routing

Hydrograph Report

Hydraflow Hydrographs Extension for AutoCAD® Civil 3D® 2008 by Autodesk, Inc. v6.049 Monday, Mar 23, 2009

Hyd. No. 2

Post-Development

Hydrograph type	= Reservoir	Peak discharge	= 12.91 cfs
Storm frequency	= 100 yrs	Time to peak	= 721 min
Time interval	= 1 min	Hyd. volume	= 33,125 cuft
Inflow hyd. No.	= 1 - Mediterranean Rest. Post-Development	Reservoir name	= Detention Pond
Max. Elevation	= 28.98 ft	Max. Storage	= 8,589 cuft

Storage Indication method used.

Hydrograph Discharge Table

(Printed values >= 1.00% of Qp. Print interval = 10)

Time (min)	Inflow cfs	Elevation ft	Clv A cfs	Clv B cfs	Clv C cfs	PfRsr cfs	Wr A cfs	Wr B cfs	Wr C cfs	Wr D cfs	Exfil cfs	Outflow cfs
630	0.357	24.75	0.134	0.133	-----	-----	-----	-----	-----	-----	-----	0.133
640	0.402	24.92	0.148	0.140	-----	-----	-----	-----	-----	-----	-----	0.140
650	0.464	25.09	0.148	0.147	-----	-----	-----	-----	-----	-----	-----	0.147
660	0.530	25.27	0.160	0.153	-----	-----	-----	-----	-----	-----	-----	0.153
670	0.621	25.48	0.164	0.160	-----	-----	-----	-----	-----	-----	-----	0.160
680	0.767	25.75	0.175	0.169	-----	-----	-----	-----	-----	-----	-----	0.169
690	0.931	26.07	0.182	0.179	-----	-----	-----	-----	-----	-----	-----	0.179
700	2.063	26.49	0.201	0.191	-----	-----	-----	-----	-----	-----	-----	0.191
710	6.063	27.66	0.223	0.222	-----	-----	-----	-----	-----	-----	-----	0.222
720	13.14 <<	28.97	11.47	0.203	-----	-----	11.26	1.196	-----	-----	-----	12.66
730	4.521	28.76	5.958	0.216	-----	-----	5.729	-----	-----	-----	-----	5.945
740	1.767	28.56	2.068	0.233	-----	-----	1.788	-----	-----	-----	-----	2.021
750	1.342	28.53	1.499	0.235	-----	-----	1.230	-----	-----	-----	-----	1.465
760	1.004	28.50	1.107	0.236	-----	-----	0.845	-----	-----	-----	-----	1.082
770	0.877	28.48	0.958	0.237	-----	-----	0.700	-----	-----	-----	-----	0.936
780	0.780	28.47	0.850	0.237	-----	-----	0.594	-----	-----	-----	-----	0.831
790	0.694	28.46	0.753	0.238	-----	-----	0.499	-----	-----	-----	-----	0.737
800	0.637	28.45	0.682	0.238	-----	-----	0.429	-----	-----	-----	-----	0.667
810	0.585	28.45	0.626	0.238	-----	-----	0.374	-----	-----	-----	-----	0.612
820	0.536	28.44	0.573	0.238	-----	-----	0.322	-----	-----	-----	-----	0.560
830	0.496	28.43	0.528	0.239	-----	-----	0.278	-----	-----	-----	-----	0.517
840	0.458	28.43	0.488	0.239	-----	-----	0.239	-----	-----	-----	-----	0.478
850	0.427	28.42	0.452	0.239	-----	-----	0.203	-----	-----	-----	-----	0.442
860	0.412	28.42	0.429	0.239	-----	-----	0.181	-----	-----	-----	-----	0.420
870	0.398	28.42	0.414	0.239	-----	-----	0.166	-----	-----	-----	-----	0.405
880	0.385	28.42	0.400	0.239	-----	-----	0.153	-----	-----	-----	-----	0.392
890	0.372	28.42	0.386	0.239	-----	-----	0.140	-----	-----	-----	-----	0.379
900	0.359	28.42	0.373	0.239	-----	-----	0.126	-----	-----	-----	-----	0.366
910	0.345	28.41	0.359	0.239	-----	-----	0.113	-----	-----	-----	-----	0.352
920	0.332	28.41	0.346	0.239	-----	-----	0.100	-----	-----	-----	-----	0.339
930	0.319	28.41	0.332	0.239	-----	-----	0.086	-----	-----	-----	-----	0.326
940	0.305	28.41	0.318	0.239	-----	-----	0.073	-----	-----	-----	-----	0.312
950	0.292	28.41	0.304	0.239	-----	-----	0.059	-----	-----	-----	-----	0.299
960	0.278	28.41	0.291	0.240	-----	-----	0.046	-----	-----	-----	-----	0.285
970	0.267	28.40	0.278	0.240	-----	-----	0.033	-----	-----	-----	-----	0.273
980	0.262	28.40	0.270	0.240	-----	-----	0.025	-----	-----	-----	-----	0.265
990	0.257	28.40	0.264	0.240	-----	-----	0.020	-----	-----	-----	-----	0.260
1000	0.252	28.40	0.259	0.240	-----	-----	0.015	-----	-----	-----	-----	0.255
1010	0.248	28.40	0.254	0.240	-----	-----	0.010	-----	-----	-----	-----	0.250
1020	0.243	28.40	0.250	0.240	-----	-----	0.006	-----	-----	-----	-----	0.245

Continues on next page...

Post-Development

Hydrograph Discharge Table

Time (min)	Inflow cfs	Elevation ft	Clv A cfs	Clv B cfs	Clv C cfs	PfRsr cfs	Wr A cfs	Wr B cfs	Wr C cfs	Wr D cfs	Exfil cfs	Outflow cfs
1030	0.238	28.40	0.245	0.240	-----	-----	0.001	-----	-----	-----	-----	0.241
1040	0.233	28.40	0.244	0.240	-----	-----	-----	-----	-----	-----	-----	0.240
1050	0.229	28.40	0.244	0.240	-----	-----	-----	-----	-----	-----	-----	0.240
1060	0.224	28.39	0.244	0.240	-----	-----	-----	-----	-----	-----	-----	0.240
1070	0.219	28.39	0.244	0.239	-----	-----	-----	-----	-----	-----	-----	0.239
1080	0.214	28.38	0.244	0.239	-----	-----	-----	-----	-----	-----	-----	0.239
1090	0.209	28.38	0.244	0.239	-----	-----	-----	-----	-----	-----	-----	0.239
1100	0.205	28.37	0.244	0.239	-----	-----	-----	-----	-----	-----	-----	0.239
1110	0.200	28.36	0.244	0.239	-----	-----	-----	-----	-----	-----	-----	0.239
1120	0.195	28.35	0.244	0.239	-----	-----	-----	-----	-----	-----	-----	0.239
1130	0.190	28.34	0.244	0.238	-----	-----	-----	-----	-----	-----	-----	0.238
1140	0.185	28.33	0.244	0.238	-----	-----	-----	-----	-----	-----	-----	0.238
1150	0.180	28.32	0.244	0.238	-----	-----	-----	-----	-----	-----	-----	0.238
1160	0.176	28.30	0.244	0.237	-----	-----	-----	-----	-----	-----	-----	0.237
1170	0.171	28.29	0.244	0.237	-----	-----	-----	-----	-----	-----	-----	0.237
1180	0.166	28.27	0.244	0.237	-----	-----	-----	-----	-----	-----	-----	0.237
1190	0.161	28.25	0.244	0.236	-----	-----	-----	-----	-----	-----	-----	0.236
1200	0.156	28.23	0.244	0.236	-----	-----	-----	-----	-----	-----	-----	0.236
1210	0.152	28.21	0.244	0.235	-----	-----	-----	-----	-----	-----	-----	0.235
1220	0.151	28.19	0.244	0.235	-----	-----	-----	-----	-----	-----	-----	0.235
1230	0.150	28.17	0.244	0.234	-----	-----	-----	-----	-----	-----	-----	0.234
1240	0.149	28.15	0.244	0.234	-----	-----	-----	-----	-----	-----	-----	0.234
1250	0.148	28.13	0.244	0.234	-----	-----	-----	-----	-----	-----	-----	0.234
1260	0.147	28.11	0.244	0.233	-----	-----	-----	-----	-----	-----	-----	0.233
1270	0.146	28.09	0.244	0.233	-----	-----	-----	-----	-----	-----	-----	0.233
1280	0.145	28.07	0.244	0.232	-----	-----	-----	-----	-----	-----	-----	0.232
1290	0.144	28.05	0.244	0.232	-----	-----	-----	-----	-----	-----	-----	0.232
1300	0.144	28.03	0.244	0.231	-----	-----	-----	-----	-----	-----	-----	0.231
1310	0.143	28.01	0.244	0.231	-----	-----	-----	-----	-----	-----	-----	0.231
1320	0.142	27.99	0.244	0.230	-----	-----	-----	-----	-----	-----	-----	0.230
1330	0.141	27.96	0.244	0.229	-----	-----	-----	-----	-----	-----	-----	0.229
1340	0.140	27.94	0.244	0.229	-----	-----	-----	-----	-----	-----	-----	0.229
1350	0.139	27.91	0.244	0.228	-----	-----	-----	-----	-----	-----	-----	0.228
1360	0.138	27.88	0.241	0.228	-----	-----	-----	-----	-----	-----	-----	0.228
1370	0.137	27.86	0.236	0.227	-----	-----	-----	-----	-----	-----	-----	0.227
1380	0.136	27.83	0.231	0.226	-----	-----	-----	-----	-----	-----	-----	0.226
1390	0.135	27.80	0.226	0.226	-----	-----	-----	-----	-----	-----	-----	0.226
1400	0.134	27.78	0.225	0.225	-----	-----	-----	-----	-----	-----	-----	0.225
1410	0.133	27.75	0.224	0.224	-----	-----	-----	-----	-----	-----	-----	0.224
1420	0.132	27.72	0.224	0.224	-----	-----	-----	-----	-----	-----	-----	0.224
1430	0.131	27.70	0.223	0.223	-----	-----	-----	-----	-----	-----	-----	0.223
1440	0.130	27.67	0.223	0.222	-----	-----	-----	-----	-----	-----	-----	0.222
1450	0.041	27.63	0.222	0.222	-----	-----	-----	-----	-----	-----	-----	0.222
1460	0.000	27.57	0.222	0.220	-----	-----	-----	-----	-----	-----	-----	0.220
1470	0.000	27.50	0.222	0.218	-----	-----	-----	-----	-----	-----	-----	0.218
1480	0.000	27.44	0.222	0.217	-----	-----	-----	-----	-----	-----	-----	0.217
1490	0.000	27.38	0.222	0.215	-----	-----	-----	-----	-----	-----	-----	0.215
1500	0.000	27.31	0.222	0.213	-----	-----	-----	-----	-----	-----	-----	0.213
1510	0.000	27.25	0.222	0.212	-----	-----	-----	-----	-----	-----	-----	0.212
1520	0.000	27.19	0.222	0.210	-----	-----	-----	-----	-----	-----	-----	0.210
1530	0.000	27.13	0.222	0.209	-----	-----	-----	-----	-----	-----	-----	0.209
1540	0.000	27.07	0.216	0.207	-----	-----	-----	-----	-----	-----	-----	0.207
1550	0.000	27.00	0.206	0.205	-----	-----	-----	-----	-----	-----	-----	0.205
1560	0.000	26.93	0.203	0.203	-----	-----	-----	-----	-----	-----	-----	0.203

Continues on next page...

Post-Development

Hydrograph Discharge Table

Time (min)	Inflow cfs	Elevation ft	Clv A cfs	Clv B cfs	Clv C cfs	PfRsr cfs	Wr A cfs	Wr B cfs	Wr C cfs	Wr D cfs	Exfil cfs	Outflow cfs
1570	0.000	26.85	0.202	0.201	-----	-----	-----	-----	-----	-----	-----	0.201
1580	0.000	26.78	0.201	0.199	-----	-----	-----	-----	-----	-----	-----	0.199
1590	0.000	26.70	0.201	0.197	-----	-----	-----	-----	-----	-----	-----	0.197
1600	0.000	26.63	0.201	0.195	-----	-----	-----	-----	-----	-----	-----	0.195
1610	0.000	26.55	0.201	0.193	-----	-----	-----	-----	-----	-----	-----	0.193
1620	0.000	26.48	0.201	0.191	-----	-----	-----	-----	-----	-----	-----	0.191
1630	0.000	26.41	0.201	0.189	-----	-----	-----	-----	-----	-----	-----	0.189
1640	0.000	26.34	0.191	0.187	-----	-----	-----	-----	-----	-----	-----	0.187
1650	0.000	26.27	0.185	0.185	-----	-----	-----	-----	-----	-----	-----	0.185
1660	0.000	26.20	0.183	0.183	-----	-----	-----	-----	-----	-----	-----	0.183
1670	0.000	26.13	0.182	0.181	-----	-----	-----	-----	-----	-----	-----	0.181
1680	0.000	26.06	0.182	0.179	-----	-----	-----	-----	-----	-----	-----	0.179
1690	0.000	25.99	0.182	0.177	-----	-----	-----	-----	-----	-----	-----	0.177
1700	0.000	25.90	0.182	0.174	-----	-----	-----	-----	-----	-----	-----	0.174
1710	0.000	25.81	0.182	0.171	-----	-----	-----	-----	-----	-----	-----	0.171
1720	0.000	25.73	0.171	0.168	-----	-----	-----	-----	-----	-----	-----	0.168
1730	0.000	25.64	0.166	0.165	-----	-----	-----	-----	-----	-----	-----	0.165
1740	0.000	25.56	0.164	0.163	-----	-----	-----	-----	-----	-----	-----	0.163
1750	0.000	25.47	0.164	0.160	-----	-----	-----	-----	-----	-----	-----	0.160
1760	0.000	25.39	0.164	0.157	-----	-----	-----	-----	-----	-----	-----	0.157
1770	0.000	25.31	0.164	0.154	-----	-----	-----	-----	-----	-----	-----	0.154
1780	0.000	25.24	0.155	0.152	-----	-----	-----	-----	-----	-----	-----	0.152
1790	0.000	25.16	0.149	0.149	-----	-----	-----	-----	-----	-----	-----	0.149
1800	0.000	25.08	0.148	0.146	-----	-----	-----	-----	-----	-----	-----	0.146
1810	0.000	25.01	0.148	0.143	-----	-----	-----	-----	-----	-----	-----	0.143
1820	0.000	24.91	0.148	0.139	-----	-----	-----	-----	-----	-----	-----	0.139
1830	0.000	24.81	0.136	0.135	-----	-----	-----	-----	-----	-----	-----	0.135
1840	0.000	24.71	0.133	0.132	-----	-----	-----	-----	-----	-----	-----	0.132

...End

Pond Report

Hydraflow Hydrographs Extension for AutoCAD® Civil 3D® 2008 by Autodesk, Inc. v6.049 Monday, Mar 23, 2009

Pond No. 1 - Detention Pond

Pond Data

Contours - User-defined contour areas. Average end area method used for volume calculation. Begining Elevation = 23.00 ft

Stage / Storage Table

Stage (ft)	Elevation (ft)	Contour area (sqft)	Incr. Storage (cuft)	Total storage (cuft)
0.00	23.00	376	0	0
1.00	24.00	652	514	514
2.00	25.00	982	817	1,331
3.00	26.00	1,368	1,175	2,506
4.00	27.00	1,800	1,584	4,090
5.00	28.00	2,270	2,035	6,125
6.00	29.00	2,780	2,525	8,650
7.00	30.00	3,330	3,055	11,705

Culvert / Orifice Structures

	[A]	[B]	[C]	[PrfRsr]
Rise (in)	= 24.00	2.00	0.00	0.00
Span (in)	= 24.00	2.00	0.00	0.00
No. Barrels	= 1	1	0	0
Invert El. (ft)	= 23.00	23.00	0.00	0.00
Length (ft)	= 31.00	0.00	0.00	0.00
Slope (%)	= 0.50	0.00	0.00	n/a
N-Value	= .013	.013	.013	n/a
Orifice Coeff.	= 0.60	0.60	0.60	0.60
Multi-Stage	= n/a	Yes	No	No

Weir Structures

	[A]	[B]	[C]	[D]
Crest Len (ft)	= 7.85	5.00	0.00	0.00
Crest El. (ft)	= 28.40	28.80	0.00	0.00
Weir Coeff.	= 3.33	3.33	3.33	3.33
Weir Type	= Riser	Ciplti	---	---
Multi-Stage	= Yes	No	No	No

Exfil.(in/hr) = 0.000 (by Wet area)
TW Elev. (ft) = 0.00

Note: Culvert/Orifice outflows are analyzed under inlet (ic) and outlet (oc) control. Weir risers checked for orifice conditions (ic) and submergence (s).

Stage / Storage / Discharge Table

Stage ft	Storage cuft	Elevation ft	Clv A cfs	Clv B cfs	Clv C cfs	PrfRsr cfs	Wr A cfs	Wr B cfs	Wr C cfs	Wr D cfs	Exfil cfs	User cfs	Total cfs
0.00	0	23.00	0.00	0.00	---	---	0.00	0.00	---	---	---	---	0.000
1.00	514	24.00	0.11 ic	0.10 ic	---	---	0.00	0.00	---	---	---	---	0.098
2.00	1,331	25.00	0.15 ic	0.14 ic	---	---	0.00	0.00	---	---	---	---	0.143
3.00	2,506	26.00	0.18 ic	0.18 ic	---	---	0.00	0.00	---	---	---	---	0.177
4.00	4,090	27.00	0.21 ic	0.21 ic	---	---	0.00	0.00	---	---	---	---	0.205
5.00	6,125	28.00	0.24 ic	0.23 ic	---	---	0.00	0.00	---	---	---	---	0.230
6.00	8,650	29.00	12.35 oc	0.20 ic	---	---	12.15	1.49	---	---	---	---	13.84
7.00	11,705	30.00	26.37 ic	0.18 ic	---	---	26.19 ic	21.89	---	---	---	---	48.26

LandTech Resources, Inc.
Surveying • Engineering • GPS
201 Bulifants Blvd., Suite A, Williamsburg, VA 23188
Phone: (757) 565-1677 Fax: (757) 565-0782
web: landtechresources.com

PROJECT NAME Mediterranean Rest.
PROJECT NO. 08-230
SHEET NO. OF
CALCULATED BY KWJ DATE 5/28/09
SCALE

DESIGN RIP RAP STILLING BASIN

Design Procedure: Per HEC 14, Chapter 10.1

Step 1: Compute culvert outlet velocity, V_o, and depth, y_o:

$V_o = 4.80$ fps, $y_o = 0.88'$, $y_c = \left(\frac{A}{2}\right)^{1/2} = 1.25'$

$$F_r = \frac{V_o}{(9.81 y_c)^{1/2}} = \frac{4.80}{((9.81)(1.25))^{1/2}} = 1.37$$

Step 2: Select D_{50} and obtain h_s/y_c from Equation 10.1:

$d_{50} = 0.125'$ (trial & error selection)

Check $h_s/d_{50} \geq 2$ and $d_{50}/y_c \geq 0.1$

$$\frac{d_{50}}{y_c} = \frac{0.125}{1.25} = 0.10 \geq 0.1 \quad \underline{\underline{OK}}$$

$TW = 0.35$

$$\frac{TW}{y_c} = \frac{0.35}{1.25} = 0.28 < 0.75 \text{ Therefore } C_o = 1.4$$

$$\frac{h_s}{y_c} = 0.86\left(\frac{d_{50}}{y_c}\right)^{-0.55}\left(\frac{V_o}{\sqrt{g y_c}}\right) - C_o$$

$$\frac{h_s}{y_c} = 0.86(0.10)^{-0.55}(0.76) - 1.4 = 0.92$$

LandTech Resources, Inc.
Surveying • Engineering • GPS
201 Bulifants Blvd., Suite A, Williamsburg, VA 23188
Phone: (757) 565-1677 Fax: (757) 565-0782
web: landtechresources.com

PROJECT NAME Mediterranean Rest.
PROJECT NO. 08-230
SHEET NO. OF
CALCULATED BY KMJ DATE 5/28/09
SCALE

$h_s = (h_s/y_e)\, y_e = 0.92(1.25) = 1.15$

$\frac{h_s}{\partial_{so}} = \frac{1.15}{0.125} = 9.2 \geq 2$ OK

Step 3: Size the basin as shown in Figures 10.1 & 10.2:

$L_s = 10 h_s = (10)(1.15) = 11.5'$

$L_{s\,min} = 3W_o = (3)(2) = 6'$, use $L_s = 11.5'$

$L_B = 15 h_s = (15)(1.15) = 17.25'$

$L_{B\,min} = 4W_o = (4)(2) = 8'$, use $L_B = 17.25'$

$W_B = W_o + 2(L_B/3) = 2 + 2(17.25/3) = 13.5'$

Step 4: Determine the basin exit depth, $y_B = y_c$, and exit velocity, $V_B = V_c$

$\frac{Q^2}{g} = [y_c(W_B + zy_c)]^3 / (W_B + 2zy_c)$

$1.24 = [y_c(13.5 + (1)(y_c)]^3 / (13.5 + (2)(1)(y_c))$

By trial and error $y_c = 0.19'$

$A_c = 13.5' \times 1.85' = 24.98\,ft^2$

$V_B = V_c = \frac{Q}{A_c} = \frac{6.33\,fps}{24.98\,ft^2} = 0.25\,fps < 2.5\,fps$ OK

LandTech
Resources, Inc.
Surveying • Engineering • GPS
201 Bulifants Blvd., Suite A, Williamsburg, VA 23188
Phone: (757) 565-1677 Fax: (757) 565-0782
web: landtechresources.com

PROJECT NAME Mediterranean Rest.
PROJECT NO. 08-230
SHEET NO. OF
CALCULATED BY KMJ DATE 5/28/09
SCALE

Step 5: Determine need for downstream rip rap:

$$\frac{TW}{y_o} = \frac{0.35'}{0.88'} = 0.40 \leq 0.75$$

No additional rip rap needed downstream

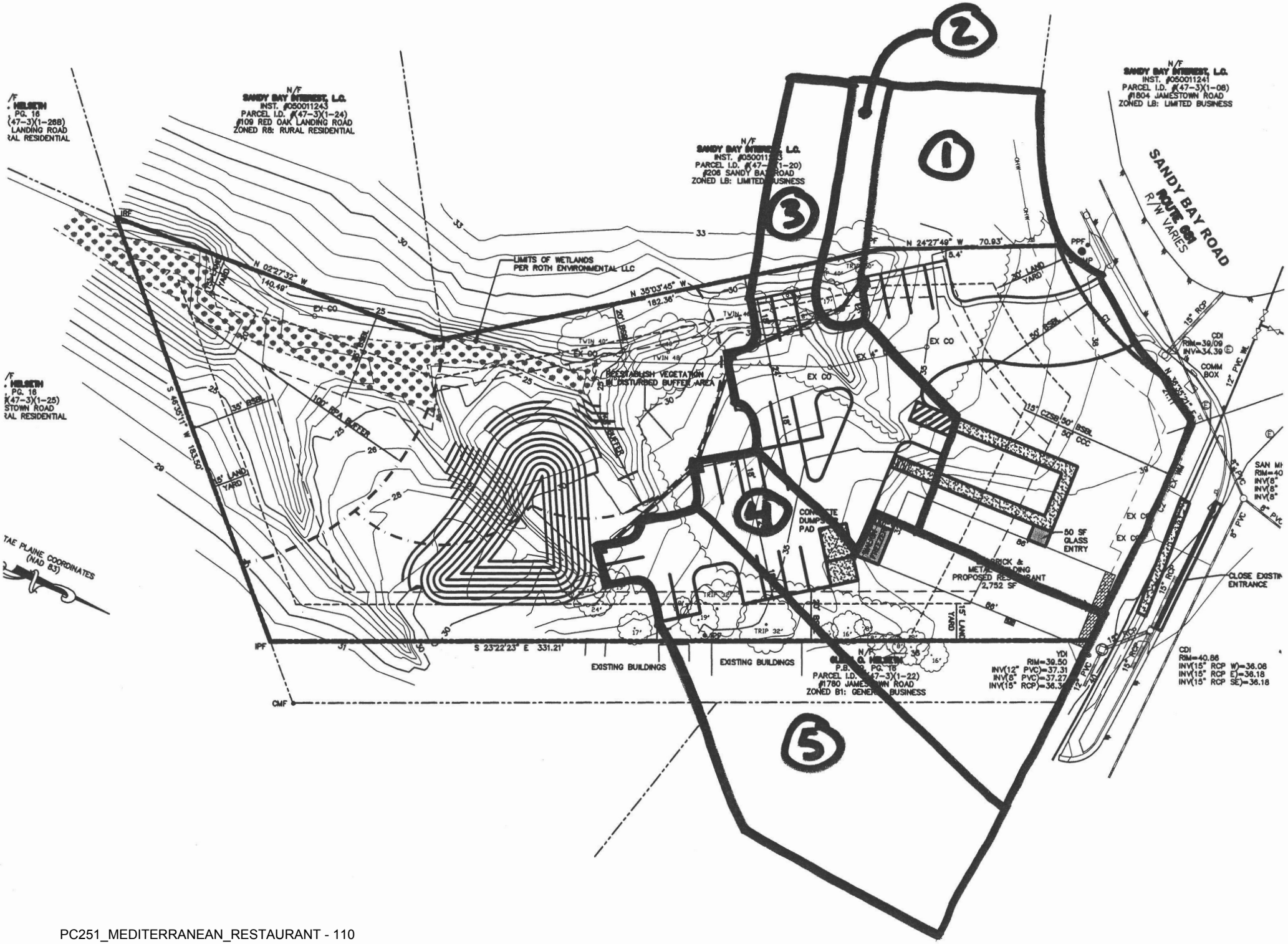
SANDY BAY ROAD
ROUTE 88
R/W VARIES
N/F
SANDY BAY INTEREST, L.C.
INST. #050011241
PARCEL I.D. #(47-3)(1-08)
#1804 JAMESTOWN ROAD
ZONED LB: LIMITED BUSINESS
N/F
SANDY BAY INTEREST, L.C.
INST. #050011243
PARCEL I.D. #(47-3)(1-24)
#109 RED OAK LANDING ROAD
ZONED RB: RURAL RESIDENTIAL
N/F
SANDY BAY INTEREST, L.C.
INST. #050011243
PARCEL I.D. #(47-3)(1-20)
#208 SANDY BAY ROAD
ZONED LB: LIMITED BUSINESS
LIMITS OF WETLANDS
PER ROTH ENVIRONMENTAL LLC
N 24°27'49" W 70.93'
N 35°03'45" W 182.36'
N 02°27'32" W 140.49'
S 46°35'11" W 181.50'
S 23°22'23" E 331.21'
REESTABLISH VEGETATION IN DISTURBED BUFFER AREA
100' RPA BUFFER
35' BSBL
15' LAND YARD
25' LAND YARD
50' BSBL
CONCRETE DUMPSTER PAD
50 SF GLASS ENTRY
BRICK & METAL BUILDING
PROPOSED RESTAURANT
2,752 SF
EXISTING BUILDINGS
EXISTING BUILDINGS
N/F
P.B. 9, PG. 16
PARCEL I.D. #(47-3)(1-22)
#1780 JAMESTOWN ROAD
ZONED B1: GENERAL BUSINESS
YDI
RIM=39.50
INV(12" PVC)=37.31
INV(8" PVC)=37.27
INV(15" RCP)=36.3
CDI
RIM=39.09
INV=34.39
COMM BOX
CDI
RIM=40.86
INV(15" RCP W)=36.08
INV(15" RCP E)=36.18
INV(15" RCP SE)=36.18
CLOSE EXISTING ENTRANCE
12" PVC W
15" RCP
8" PVC
TRIP 32'
TRIP 36'
TRIP 40'
TWIN 40'
TWIN 48'
EX CO
IRF
IPF
CMF
PPF
STATE PLAINE COORDINATES (NAD 83)
1
2
3
4
5

JOB 08-230

SHEET NO. _____ OF _____

CALCULATED BY KMJ DATE 3/24/09

CHECKED BY _____ DATE _____

SCALE _____

DA- 1

c= .48
A= .40 Ac:

	c	A	CA
Roof/Road	.90	.12	.11
Grass	.30	.28	.08
		.40	.19

OVERLAND FLOW

L= 150 ft.
S= 5.0 %
Tc= 9.5 min.

CHANNEL FLOW

H= — ft.
L= — ft.
Tc= — min.

Tc= 9.5 min.

i_{10}= 6.1 in/hr

Q=CAi=(.48)(.40 Ac.)(6.1 in/hr)(C_f 1.0)

C_f for storms 25 yr+
(VDOT Manual Pg. 1-11)

Q= 1.17 cfs

$Q_{OI} = CAI = (.48)(.40)(4.0) = 0.77$ cfs

JOB 08-230

SHEET NO. _____ OF _____

CALCULATED BY KMJ DATE 3/24/09

CHECKED BY _____ DATE _____

SCALE _____

DA- 2

c= .30
A= .04 Ac.

OVERLAND FLOW

L= 100 ft.
S= 7.0 %
Tc= 11 min.

CHANNEL FLOW

H= — ft.
L= — ft.
Tc= — min.

Tc= 11 min.

i_{10}= 5.8 in/hr

Q=CAi=(.30)(.04 Ac.)(5.8 in/hr)(C_f 1.0)

C_f for storms 25 yr+
(VDOT Manual Pg. 1-11)

Q= .07 cfs

$Q_{DI} = CAI = (.30)(.04)(4.0) = .05$ cfs

JOB 08-230

SHEET NO. _____ OF _____

CALCULATED BY KWJ DATE 3/24/09

CHECKED BY _____ DATE _____

SCALE _____

DA- 3

c= .67
A= .18 Ac.

	C	A	CA
Roof / Road	.90	.11	.10
Grass	.30	.07	.02
		.18	.12

OVERLAND FLOW

L= 100 ft.
S= 7.0 %
Tc= 11 min.

CHANNEL FLOW

H= — ft.
L= — ft.
Tc= — min.

Tc= 11 min.

i_{10}= 5.8 in/hr

Q=CAi=(.67)(.18 Ac.)(5.8 in/hr)(C_f 1.0)

C_f for storms 25 yr+
(VDOT Manual Pg. 1-11)

Q= .70 cfs

Q_{DI} = CAI = (.67)(.18)(4.0) = 0.48 cfs

JOB 08-230

SHEET NO. _____ OF _____

CALCULATED BY KWJ DATE 3/24/09

CHECKED BY _____ DATE _____

SCALE _____

DA- 4

	C	A	CA
Roof (Road)	.90	.13	.12
Grass	.30	.08	.02
		.21	.14

c= .67

A= .21 Ac.

OVERLAND FLOW

L= 175 ft.

S= 4.3 %

Tc= 7 min.

CHANNEL FLOW

H= — ft.

L= — ft.

Tc= — min.

Tc= 7 min.

i_{10}= 6.8 in/hr

Q=CAi=(.67)(.21 Ac.)(6.8 in/hr)(C_f 1.0)

C_f for storms 25 yr+ (VDOT Manual Pg. 1-11)

Q=0.96 cfs

Q_{DI} = CAI = (.67)(.21)(4.0) = 0.56 cfs

JOB 08-230

SHEET NO. _____ OF _____

CALCULATED BY KMJ DATE 3/24/09

CHECKED BY _____ DATE _____

SCALE _____

DA- 5

	C	A	CA
Roof / Road	.90	.27	.24
Grass	.30	.04	.01
		.31	.25

c= .81

A= .31 Ac.

OVERLAND FLOW

L= 200 ft.

S= 5.0 %

Tc= 5 min.

CHANNEL FLOW

H= — ft.

L= — ft.

Tc= — min.

Tc= 5 min.

i_{10}= 7.2 in/hr

Q=CAi=(.81)(.31 Ac.)(7.2 in/hr)(C_f 1.0)

C_f for storms 25 yr+ (VDOT Manual Pg. 1-11)

Q= 1.81 cfs

Q_{DI} = CAI = (.81)(.31)(4.0) = 1.00 cfs

LandTech Resources, Inc.
Surveying • Engineering • GPS
201 Bulifants Blvd., Suite A, Williamsburg, VA 23188
Phone: (757) 565-1677 Fax: (757) 565-0782
web: landtechresources.com

PROJECT NAME Mediterranean Rest.
PROJECT NO. 08-230
SHEET NO. OF
CALCULATED BY KMJ DATE 3/24/09
SCALE

DESIGN DI # 1

$Q = 0.77$ cfs

$S_x = .0806$ ft/ft

STD VDOT DI-1

$L = 2.58'$

$W = 2.58'$

$P = 2W + L = 2(2.58) + 2.58 = 7.74'$

From Chart 14: $d = 0.14'$

$T = \frac{d}{S_T} = \frac{0.14}{0.0806} = 1.7'$ OK

USE VDOT DI-1

LandTech
Resources, Inc.
Surveying • Engineering • GPS
201 Bulifants Blvd., Suite A, Williamsburg, VA 23188
Phone: (757) 565-1677 Fax: (757) 565-0782
web: landtechresources.com

PROJECT NAME Mediterranean Rest
PROJECT NO. 08-230
SHEET NO. OF
CALCULATED BY KMJ DATE 3/24/09
SCALE

DESIGN DI #2

Q = .05 cfs

Std Nyloplast 18" Grate

From Chart on next page the capacity of an 18" Grate with 0.10' of head is 1.0 cfs. Since our inflow is 0.05 cfs the 18" Grate is adequate

Inline Drains

Go To Main Menu | Print | Exit

Inlet Capacity Chart | Installation Details | How To Order | CAD Drawing | Installation Photos

Nyloplast Standard Grate Inlet Capacity Chart

This chart is based on equations from the FAA Airport Drainage AC 150/5320-5B, 1970, Page 35. Certain assumptions have been made and no two installations will necessarily perform the same way. Safety factors should change with site conditions such that a safety factor 1.25 should be used for an inlet in pavement, and a safety factor of 2.0 should be used in turf areas.

Basin Outlet Pipe Size	Flow Rate CFS *
4"	1.225
6"	0.902
8"	1.941
10"	2.812
12"	4.152
15"	7.128
18"	12.157
24"	25.421
30"	52.173

Nyloplast Standard Grates 8" - 30"

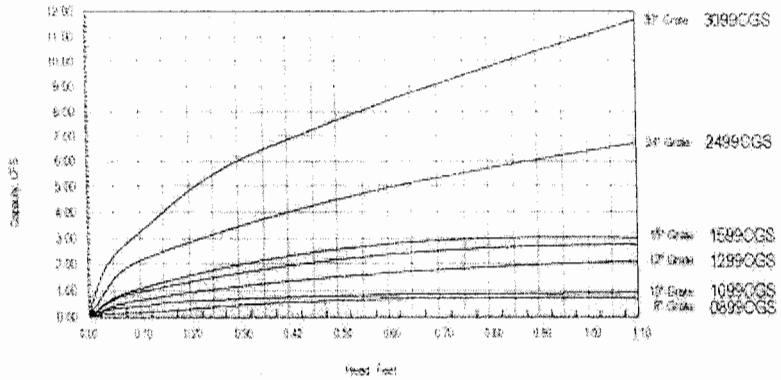

* Maximum flow capacity before drain basin begins to backfill. Calculation based on an average pipe slope of 1%

THIS PRINT DISCLOSES SUBJECT MATTER IN WHICH NYLOPLAST HAS PROPRIETARY RIGHTS. THE RECEIPT OR POSSESSION OF THIS PRINT DOES NOT CONFER, TRANSFER, OR LICENSE THE USE OF THE DESIGN OR TECHNICAL INFORMATION SHOWN HEREIN. REPRODUCTION OF THIS PRINT OR ANY INFORMATION CONTAINED HEREIN, OR MANUFACTURE OF ANY ARTICLE HEREFROM, FOR THE DISCLOSURE TO OTHERS IS FORBIDDEN EXCEPT BY SPECIFIC WRITTEN PERMISSION FROM NYLOPLAST.	DRAWN BY AWA DATE 07MAR00 APPD BY CJA DATE 07MAR00 DWG SIZE A	MATERIAL PROJECT NO./NAME GRATE / COVER SCALE 1:2 SHEET 1 OF 1	Nyloplast 3180 VERONA AVE BUFORD, GA 30518 PHN (770) 932-2443 FAX (770) 932-2493 www.nyloplast-us.com TITLE 8" - 30" STANDARD INLET CAPACITY DWG NO. 7001-150-001 REV C

LandTech
Resources, Inc.
Surveying • Engineering • GPS
201 Bulifants Blvd., Suite A, Williamsburg, VA 23188
Phone: (757) 565-1677 Fax: (757) 565-0782
web: landtechresources.com

PROJECT NAME Mediterranean Rest
PROJECT NO. 08-230
SHEET NO. OF
CALCULATED BY KWJ DATE 3/24/09
SCALE

DESIGN DI #3

$Q = 0.48$ cfs

$S_x = .005$ ft/ft

Std VDOT DI-1

$L = 2.58'$

$W = 2.58'$

$P = 2W + L = 2(2.58') + 2.58' = 7.74'$

From Chart 14: $d = 0.14'$

$T = \frac{d}{S_x} = \frac{0.14'}{.005} = 28'$ OK

USE VDOT DI-1

LandTech Resources, Inc.
Surveying • Engineering • GPS
201 Bulifants Blvd., Suite A, Williamsburg, VA 23188
Phone: (757) 565-1677 Fax: (757) 565-0782
web: landtechresources.com

PROJECT NAME Mediterranean Rest
PROJECT NO. 08-230
SHEET NO. OF
CALCULATED BY KMT DATE 3/24/09
SCALE

DESIGN DI #4

$Q = 0.56$ cfs

$S_x = .044$ ft/ft

STD VDOT DI-1

$L = 2.58'$

$W = 2.58'$

$P = 2W + L = 2(2.58') + 2.58' = 7.74'$

From Chart 14: $d = 0.14'$

$T = \frac{d}{S_x} = \frac{0.14}{.044} = 3.2'$ OK

USE VDOT DI-1

LandTech Resources, Inc.
Surveying • Engineering • GPS
201 Bulifants Blvd., Suite A, Williamsburg, VA 23188
Phone: (757) 565-1677 Fax: (757) 565-0782
web: landtechresources.com

PROJECT NAME Mediterranean Rest.
PROJECT NO. 08-230
SHEET NO. OF
CALCULATED BY KWJ DATE 3/24/09
SCALE

DESIGN DI #5

Q = 1.00 cfs

S_x = 0.04 ft/ft

Std VDOT DI-1

L = 2.58'

W = 2.58'

P = 2W + L = 2(2.58') + 2.58' = 7.74'

From Chart 14: d = 0.14'

$T = \frac{d}{S_x} = \frac{0.14'}{.04} = 3.5'$ OK

USE VDOT DI-1

LandTech Resources, Inc.

Storm Drainage Design

Phone: (757) 565-1677 Fax: (757) 565-0782

Project Manager: *Kenny Jenkins*
Project Engineer. *Kenny Jenkins*

For Tc Accumulation, Use VELOCITY (1) from Pipe Slope or (2) V=Q/A : *1*

Project Number: ***08-230*** *Project:* **Mediterranean Restaurant** Year Storm: *10*

Structure		Rational Formula: Q = CiA									Pipe Data									Mannings Formula
				CA		Inlet Time Tc (min)		(in/hr)	Runoff, Q (cfs)		Inverts		(ft)	%	(in)	Velocity (ft/sec)				N
From	To	Area "A" (ac)	Coefficient "C"	Incremental	Cumulative	Incremental	Cumulative	Rain	Incremental	Cumulative	UPstream	DOWN-stream	Length	Slope	Diameter	Based on Q/A	Based on pipe slope	Capacity (cfs)	Flow Time (min)	Manning's
From	To	Area	C	CAInc	CaCum	TimeInc	TimeCum	Rain	QInc	QCum	InvertUp	InvertDown	Length	Slope	Diameter	VelocityQA	VelocityS	Capacity	Flow Time	ManningsN
1	2	0.40	0.5	0.19	0.19	10	9.50	6.02	1.16	**1.16**	28.98	27.50	12	12.33%	15	0.94	21.85	26.81	0.01	0.011
2	3	0.04	0.3	0.01	0.20	11	11.00	5.76	0.07	**1.17**	27.50	26.78	46	1.57%	15	0.96	7.78	9.55	0.10	0.011
3	4	0.18	0.7	0.12	0.32	11	11.10	5.74	0.69	**1.86**	26.68	26.46	44	0.50%	15	1.52	4.40	5.40	0.17	0.011
4	5	0.21	0.7	0.14	0.47	7	11.27	5.72	0.80	**2.66**	26.36	26.12	48	0.50%	15	2.17	4.40	5.40	0.18	0.011
5	ES	0.31	0.8	0.25	0.72	5	11.45	5.69	1.43	**4.07**	23.10	23.00	20	0.50%	15	3.32	4.40	5.40	0.08	0.011
ES																				

LandTech Resources, Inc. *Hydraulic Grade Line (HGL) Calculations*

Project Number: *08-230*

Project: *Mediterranean Restaurant*

Date: *3.24.09*

From Structure	HGL Slope (%)	HGL Fall (ft)	Velocity Head $V^2/2g$ (ft)	Invert Shaped?	Surface Flow?	~~~~~~ STRUCTURE LOSSES ~~~~~~ Bend Losses Angle (deg)	Bend @ To (ft)	Bend @ From (ft)	ENTRANCE @ To (ft)	ENTRANCE @ From (ft)	EXIT (ft)	TOTAL (ft)	HGL @ FROM	Performance Checks & Intermediate Computations: Rim Flowline (Max. Allow. Elevation)	"Freeboard" (ft)	Elev. top of pipe @ From	Structure #s: FROM-TO	TC plus Pipe Flow Time	Elevation at 80% Full Flow	Too Shallow?	Computed Pipe Dia
	HGLSlope	HGLFall	VelocityHead	Shaped	Surface	BendAngle	BendatTo	BendatFrom	EntratTo	EntratFrom	Exit	TotalStruc	HGLatFrom	RimElev	Freeboard	PipeTopEl	FromTo	TCplusPipeTime	FlowRatio	Control	DiaComp
1	0.023%	0.003	0.01	Y	Y	0	0.000	0.000	0.003	0.000	0.005	0.003	29.98	31.40	1.42	30.42	1-2	9.51	29.98	80% D	4.6
2	0.024%	0.011	0.01	Y	Y	30	0.003	0.000	0.004	0.003	0.005	0.005	29.04	29.50	0.46	28.94	2-3	11.10	28.50	HGL	6.8
3	0.060%	0.026	0.04	Y	Y	50	0.014	0.003	0.009	0.004	0.013	0.013	29.03	29.20	0.17	28.12	3-4	11.27	27.68	HGL	10.1
4	0.121%	0.058	0.07	Y	Y	30	0.018	0.014	0.018	0.009	0.026	0.032	28.99	31.50	2.51	27.80	4-5	11.45	27.36	HGL	11.5
5	0.285%	0.057	0.17	Y	Y	40	0.055	0.018	0.043	0.018	0.060	0.062	28.90	30.50	1.60	24.54	5-ES	11.52	24.10	HGL	13.5

Tailwater Elevation at Outfall point # ES): **28.78**

PC251_MEDITERRANEAN_RESTAURANT - 123

LandTech Resources, Inc.
Surveying • Engineering • GPS
201 Bulifants Blvd., Suite A, Williamsburg, VA 23188
Phone: (757) 565-1677 Fax: (757) 565-0782
web: landtechresources.com

PROJECT NAME Mediterranean Rest
PROJECT NO. 08-230
SHEET NO. OF
CALCULATED BY KMJ DATE 3/25/09
SCALE

DESIGN OUTLET PROTECTION

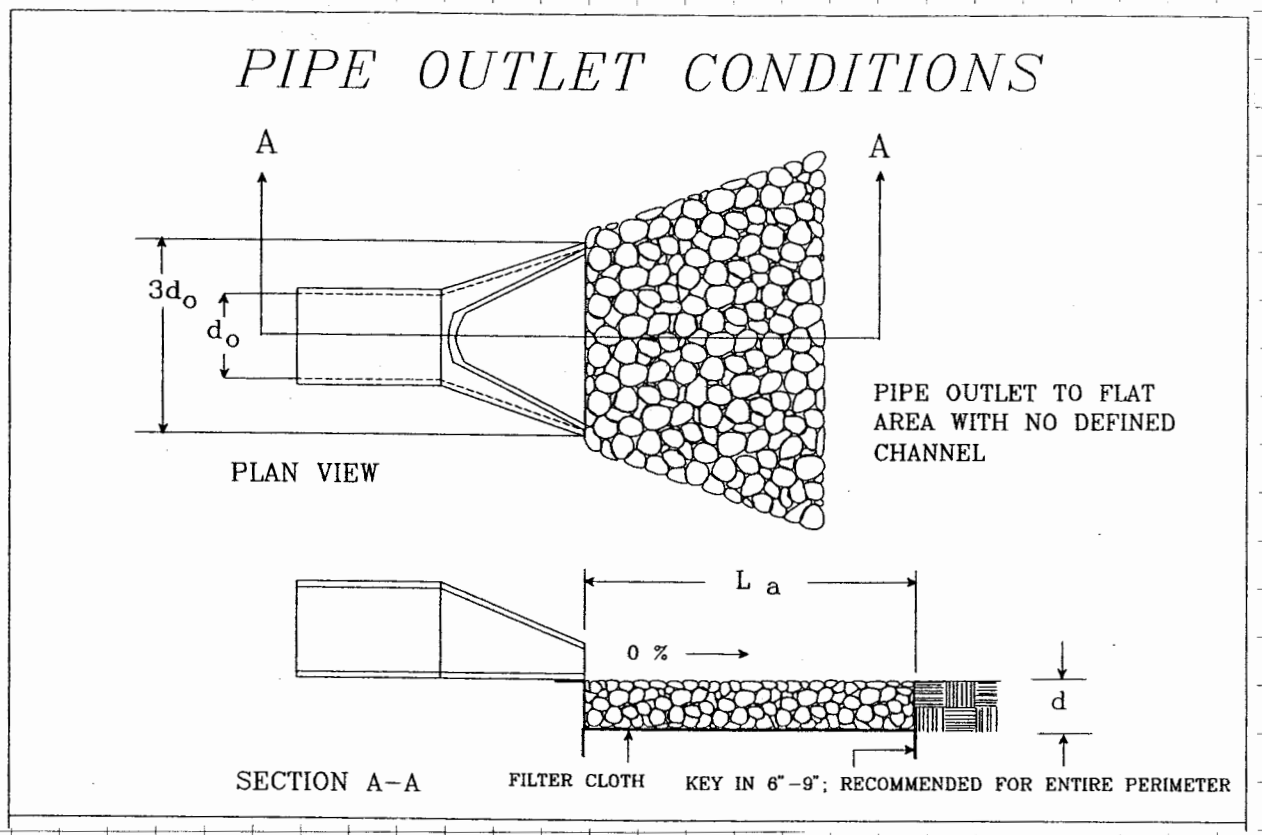

Plate 3.18-4
Q = 5.40 cfs (design capacity)
d = 1.25'
3d = 4'
La = 6'
W = d + La = 7'
d_{50} = 0.1'

USE 6' x 7' x 26"
VDOT CLASS I
RIP RAP APRON

APPENDIX B

LandTech Resources, Inc.
Surveying • Engineering • GPS
201 Bulifants Blvd., Suite A, Williamsburg, VA 23188
Phone: (757) 565-1677 Fax: (757) 565-0782
web: landtechresources.com

PROJECT NAME Mediterranean Rest.
PROJECT NO. 08-230
SHEET NO. OF
CALCULATED BY KMJ DATE 3/24/09
SCALE

DESIGN SEDIMENT BASIN

Drainage Area = 0.52 ac (DA-4,5)

Initial Storage = 0.52 ac × 134 cyd/ac = 70 cyd

Dry Storage = 35 cyd

Wet Storage = 35 cyd

Calculate Wet Storage:

V_1 = 35 cyd = 945 cf
D_1 = 5.4'

Per Detention Pond Stage/Storage Table Wet Storage between Elev 23.00 and 28.40 is 7,135 cf

Calculate Dry Storage:

V_2 = 35 cyd = 945 cf
D_2 = 0.40 (28.80 - 28.40)

Per Detention Pond Stage/Storage Table Dry Storage between Elev 28.40 and 28.80 is 1,010 cf

For Phase I E&S purposes the detention basin shall be used as a sediment basin since there is excess wet storage and the required amount of dry storage.

APPENDIX C

ROTH ENVIRONMENTAL, LLC

October 22, 2008

Mr. Kenneth M. Jenkins, P.E.
LandTech Resources, Inc
5810-F Mooretown Road
Williamsburg, VA 23188

RE: 1784 Jamestown Road
Environmental Inventory
Project No. 08-188

Dear Mr. Jenkins:

In accordance with Section 23-10 of James City County's Plan of Development, Roth Environmental, LLC has completed an Environmental Inventory on the referenced parcel in southwestern portion of James City County. The site is located in the southeastern corner of the intersection of Jamestown Road and Sandy Bay Road. The portion of the site that fronts Jamestown Road currently has three structures on it. The rear portion of the site is undeveloped.

The overall regional slope of the site is to the south. Elevations on the site range from 39 feet above mean sea level and slope to elevations as low as 17 feet above mean sea level. Surface flow off the site follows this regional slope to the south.

A copy of this site plan is included with this Environmental Inventory report.

Based on the site review there are no:

- Tidal wetlands;
- Tidal shores;
- Areas of nontidal wetlands connected by surface flow to tidal wetlands;
- Areas within the 100-Year Floodplain.

The site does contain:

- Nontidal wetlands connected by surface flow to waters with perennial flow;
- A Resource Protection Area buffer that extends 100 feet around the wetlands connected by surface flow to waters with perennial flow;
- Nontidal wetlands that are <u>not</u> connected by surface flow to waters with perennial flow;
- Resource Management Areas (all areas outside the RPA).

700 PRESCOTT CIRCLE • NEWPORT NEWS, VIRGINIA 23602
PHONE (757) 814-1048 • FAX (757) 249-2257
EMAIL: rothenv@cox.net

The site was evaluated using the *1987 U.S. Army Corps of Engineers Wetlands Delineation Manual (TR Y-87-1)*. This manual uses three parameters (soils, vegetation, and hydrology) to identify and delineate wetlands.

The limits of nontidal wetlands are situated along the toe of slope of the ravine situated on the southeastern portion of the site. Typical species identified in the wetlands include sweet gum (*Liquidambar styraciflua*), red maple (*Acer rubrum*), ironwood (*Carpinus caroliniana*), netted chain fern (*Woodwardia areolata*), cinnamon fern (*Osmunda cinnamomea*), and lizards tail (*Saururus cernuus*). Soils in the wetlands area are identified as low chroma, mottled, sandy loams (chroma 2 – Munsell Soil Color Charts). Hydrology was observed as water stained leaves, shallow rooting, and drainage patterns in wetlands.

The undeveloped upland areas on the site are maintained yard areas and mixed deciduous hardwood forest. The dominant species in the uplands are tulip tree (*Liriodendron tulipifera*), white oak (*Quercus alba*), dogwood (*Cornus florida*), sweet gum (*Liquidambar styraciflua*), red maple (*Acer rubrum*), sassafras (*Sassafras albidum*), paw paw (*Asimina triloba*), Christmas fern (*Poylstichum acrostichoides*), honeysuckle (*Lonicera japonica*), Kentucky fescue (*Festuca arundinacea*), and grape (*Vitis rotundifolia*). Soils in these uplands are sandy loams and exhibit chromas of 4 and 6 (Munsell Soil Color Charts). No indicators of hydrology were observed in the upland areas.

The wetland areas situated south of Wetland Flag Numbers 5 and 22 are connected by surface flow to a perennial waterbody, as defined by the Department of Conservation and Recreation (DCR). These wetlands require a 100 foot Resource Protection Area (RPA) buffer.

The area immediately north of Wetland Flag Numbers 5 and 22 is vegetated by pawpaw (*Asimina triloba*), a facultative-upland plant. As there are no wetland plants inhabiting the ravine for an area of approximately 40 feet, the 'connected status' of the wetlands to the north is broken. From this point, the wetlands that extend to the north of this demarcation are no longer considered RPA features. The limits of the RPA are depicted on the attached Existing Conditions Map prepared by LandTech Resources, Inc. As outlined in the James City County Ordinance, all areas of the county outside RPA buffers are considered Resource Management Areas (RMA). Both the RPA and RMA areas are depicted on the topographic map included with this report.

According to the Soil Survey of James City and York Counties and the City of Williamsburg, Virginia three soil types occur on the property. These soils consist of Craven-Uchee complex (6 to 10 % slopes), Slagle fine sandy loam (0 to 2% slopes), and Slagle fine sandy loam (2 to 6% slopes). The Craven-Uchee complex soils are mapped on the central and southern portions of the site. Slagle soils (0 to 2 % slopes) are mapped along the northern edge of the site that is developed and along the northeastern edge of the site which is undeveloped. Slagle soils (2 to 6% slopes) are mapped in the northwestern edge of the site. Although Slagle soils (0 to 2% slopes) are found on the higher elevations of the site, the National Resources Conservation Service (NRCS) lists this soil type as hydric.

The entire property is shown on the National Flood Insurance Rate Map (Community Panel 51095C0185C effective date September 28, 2007) produced by FEMA as being in Flood Zone X (areas of 0.2% annual chance flood; areas of 1% annual chance flood with average depths of less than 1 foot or with drainage areas less than 1 square mile; and areas protected by levees from 1% annual chance flood). A flood zone map is included with this report.

Based on the topographic maps and NRCS soils survey, there do not appear to be slopes greater than 25 percent on the site. Should specific areas appear to have slopes that approach 25 percent, Roth Environmental, LLC recommends that these areas be surveyed to determine the specific slope in each particular area.

This concludes the Environmental Inventory of the property located at 1784 Jamestown Road. Should you have any questions or wish to discuss conditions on the property, please call me at 814-1048.

Sincerely,

ROTH ENVIRONMENTAL, LLC.

Matthew A. Roth, P.W.S.
Managing Partner

Enclosures

C:\Roth Environmental, LLC\Projects\2008\08-188.jamestown.1784\2008.10.22.jamestown road.env inv.doc

ROTH ENVIRONMENTAL, LLC
700 PRESCOTT CIRCLE • NEWPORT NEWS, VIRGINIA 23602
PHONE (757) 814-1048 • FAX (757) 249-2257
EMAIL: rothenv@cox.net

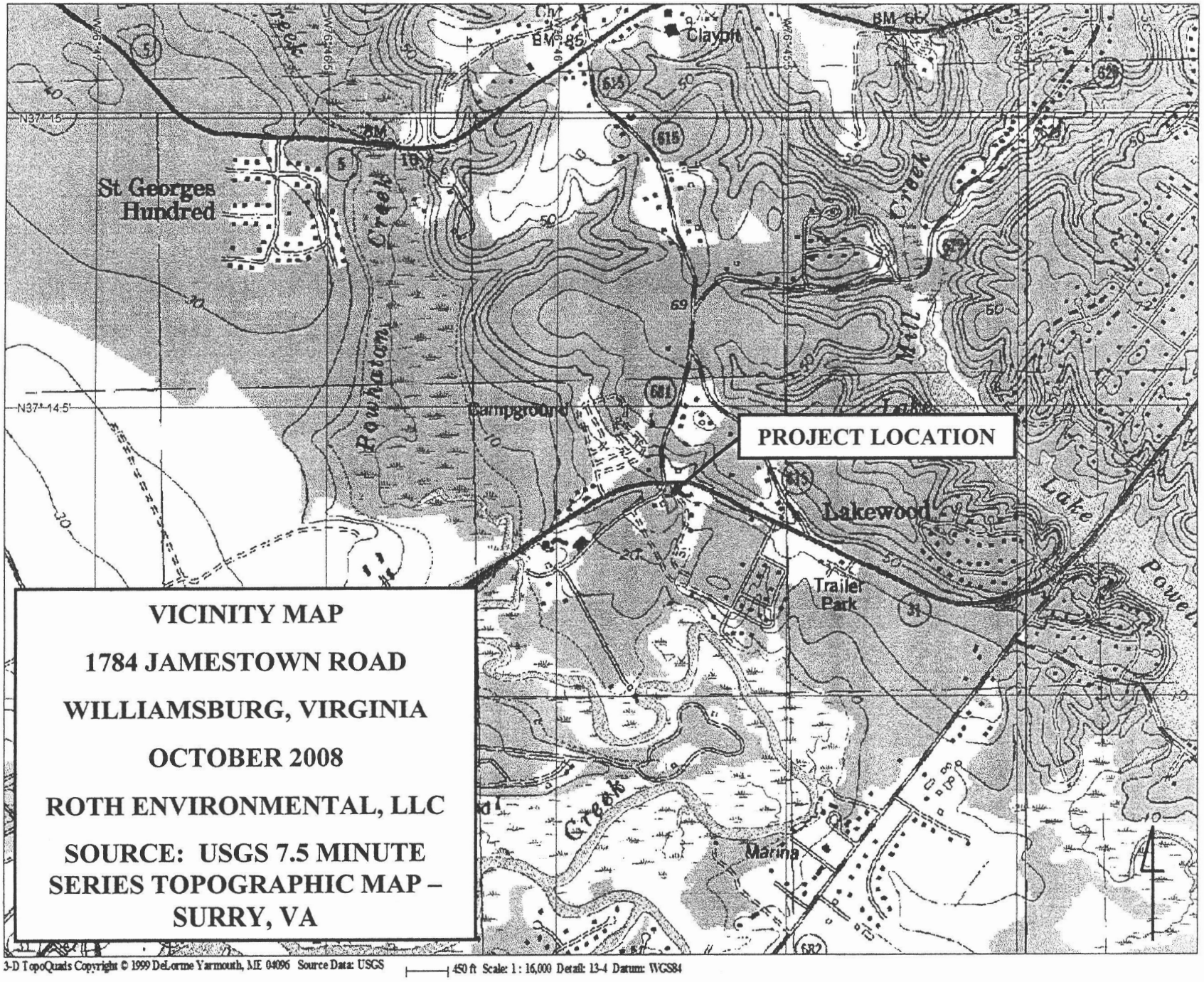
St Georges Hundred
Claypit
BM 85
BM 66
N37°-15'
N37°-14-5'
Powhatan Creek
Campground
Mill Creek
Lake Powell
Lakewood
Trailer Park
Marina
Creek
PROJECT LOCATION
VICINITY MAP
1784 JAMESTOWN ROAD
WILLIAMSBURG, VIRGINIA
OCTOBER 2008
ROTH ENVIRONMENTAL, LLC
SOURCE: USGS 7.5 MINUTE SERIES TOPOGRAPHIC MAP – SURRY, VA
3-D TopoQuads Copyright © 1999 DeLorme Yarmouth, ME 04096 Source Data: USGS
450 ft Scale: 1 : 16,000 Detail: 13-4 Datum: WGS84

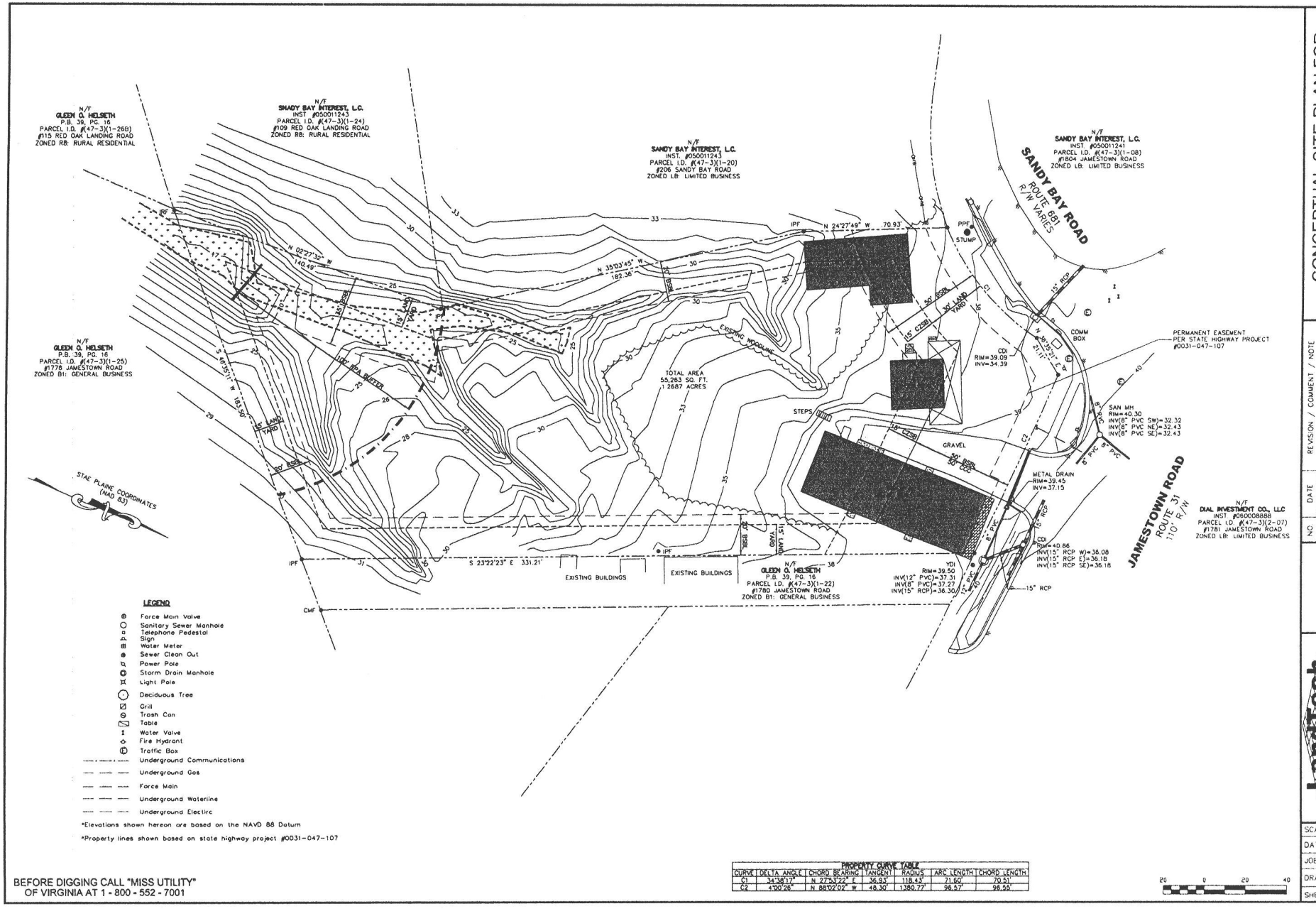

PROPERTY CURVE TABLE

CURVE	DELTA ANGLE	CHORD BEARING	TANGENT	RADIUS	ARC LENGTH	CHORD LENGTH
C1	34°38'17"	N 27°53'22" E	36.93'	118.43'	71.60'	70.51'
C2	4°00'26"	N 88°02'02" W	48.30'	1380.77'	96.57'	96.55'

CONCEPTUAL SITE PLAN FOR RESTAURANT SITE

1784 JAMESTOWN ROAD – PARCEL ID: 4730100021
EXISTING CONDITIONS

James City County, Virginia

NO	DATE	REVISION / COMMENT / NOTE

LandTech Resources, Inc.
Surveying • GIS • Engineering
205 Bulfants Blvd., Ste. 1, Williamsburg, VA 23188
Phone: (757) 565-1677 Fax: (757) 565-0782
web: landtechresources.com

SCALE: 1" = 20'
DATE: 8/22/08
JOB: 08-230
DRAWN BY: KMJ
SHEET: P1 OF 1

Soil Map–James City and York Counties and the City of Williamsburg, Virginia
(1784 JAMESTOWN ROAD)

MAP LEGEND

Area of Interest (AOI)
- Area of Interest (AOI)

Soils
- Soil Map Units

Special Point Features
- Blowout
- Borrow Pit
- Clay Spot
- Closed Depression
- Gravel Pit
- Gravelly Spot
- Landfill
- Lava Flow
- Marsh
- Mine or Quarry
- Miscellaneous Water
- Perennial Water
- Rock Outcrop
- Saline Spot
- Sandy Spot
- Severely Eroded Spot
- Sinkhole
- Slide or Slip
- Sodic Spot
- Spoil Area
- Stony Spot
- Very Stony Spot
- Wet Spot
- Other

Special Line Features
- Gully
- Short Steep Slope
- Other

Political Features

Municipalities
- Cities
- Urban Areas

Water Features
- Oceans
- Streams and Canals

Transportation
- Rails

Roads
- Interstate Highways
- US Routes
- State Highways
- Local Roads
- Other Roads

MAP INFORMATION

Original soil survey map sheets were prepared at publication scale. Viewing scale and printing scale, however, may vary from the original. Please rely on the bar scale on each map sheet for proper map measurements.

Source of Map: Natural Resources Conservation Service
Web Soil Survey URL: http://websoilsurvey.nrcs.usda.gov
Coordinate System: UTM Zone 18N

This product is generated from the USDA-NRCS certified data as of the version date(s) listed below.

Soil Survey Area: James City and York Counties and the City of Williamsburg, Virginia
Survey Area Data: Version 9, Dec 18, 2007

Date(s) aerial images were photographed: 3/17/1990

The orthophoto or other base map on which the soil lines were compiled and digitized probably differs from the background imagery displayed on these maps. As a result, some minor shifting of map unit boundaries may be evident.

Map Unit Legend

James City and York Counties and the City of Williamsburg, Virginia (VA695)			
Map Unit Symbol	**Map Unit Name**	**Acres in AOI**	**Percent of AOI**
11C	Craven-Uchee complex, 6 to 10 percent slopes	0.7	53.0%
29A	Slagle fine sandy loam, 0 to 2 percent slopes	0.5	35.3%
29B	Slagle fine sandy loam, 2 to 6 percent slopes	0.2	11.8%
Totals for Area of Interest (AOI)		1.4	100.0%

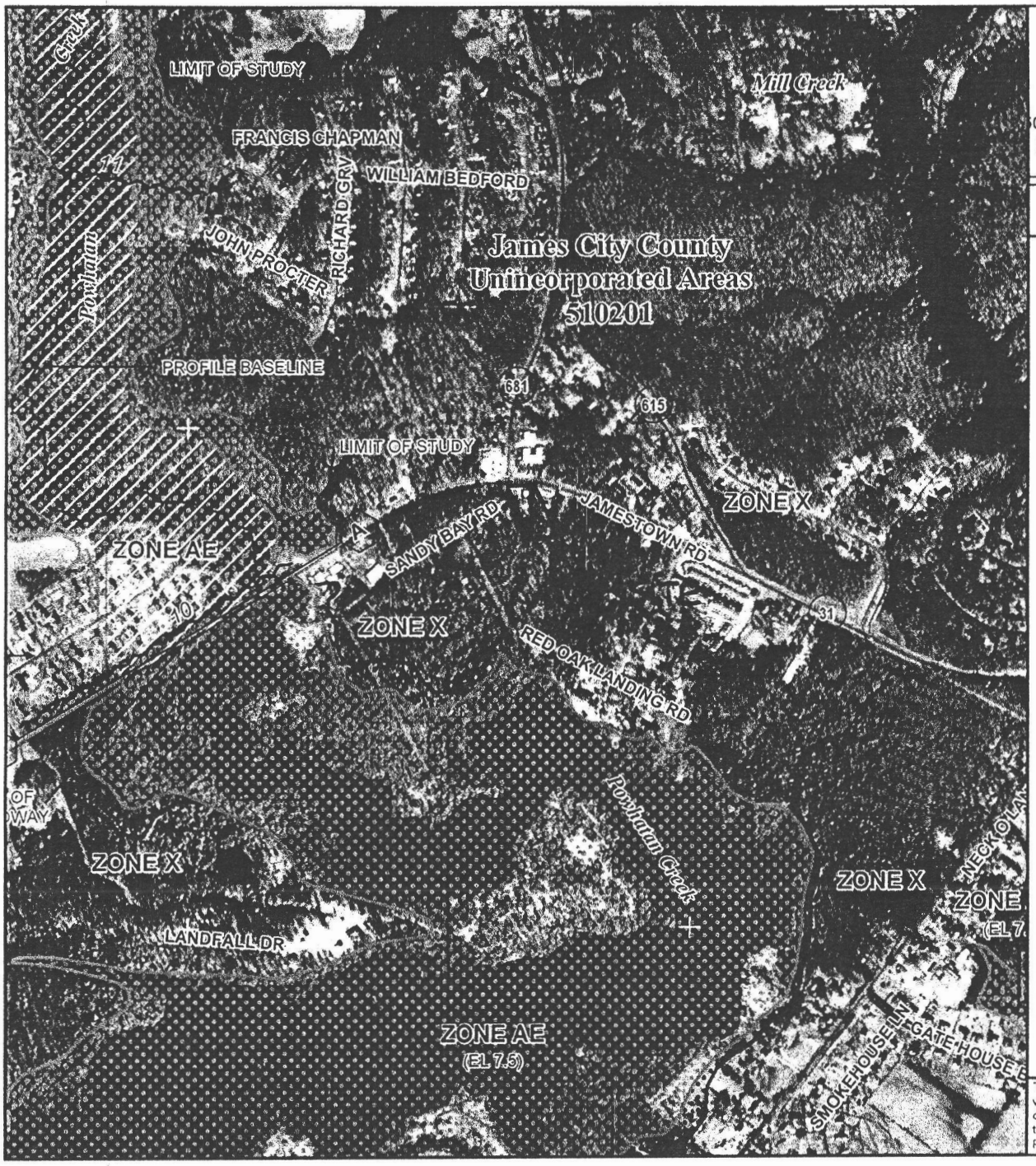

MAP SCALE 1" = 1000'

00 0 1000 2000 FEET

METERS

NFIP

NATIONAL FLOOD INSURANCE PROGRAM

PANEL 0185C

FIRM

FLOOD INSURANCE RATE MAP

JAMES CITY COUNTY, VIRGINIA

AND INCORPORATED AREAS

PANEL 185 OF 240

(SEE MAP INDEX FOR FIRM PANEL LAYOUT)

CONTAINS

COMMUNITY	NUMBER	PANEL	SUFFIX
JAMES CITY COUNTY	510201	0185	C

Notice to User: The Map Number shown below should be used when placing map orders; the Community Number shown above should be used on insurance applications for the subject community.

MAP NUMBER
51095C0185C

EFFECTIVE DATE
SEPTEMBER 28, 2007

Federal Emergency Management Agency

This is an official copy of a portion of the above referenced flood map. It was extracted using F-MIT On-Line. This map does not reflect changes or amendments which may have been made subsequent to the date on the title block. For the latest product information about National Flood Insurance Program flood maps check the FEMA Flood Map Store at www.msc.fema.gov

ECS Mid-Atlantic, LLC
108 Ingram Road
Suite 1
Williamsburg, VA 23188
(757) 229-6677

LETTER OF TRANSMITTAL

February 26, 2010

Mrs Janice M Ortalan
109 Indigo Dam Road
Williamsburg, VA 23188

RE: **Mediterranean Restaurant**

ECS Job # **07:10562**

Permits:

Location: **Jamestown Road and Sandy Bay Road**
Williamsburg, VA

We are enclosing:

X Materials Engineering Division Reports
X For your use
X As requested

ENCL:

Field Report # 4 02/24/2010

Michael J. Galli, Vice President
Principal Engineer

FEB 25 2010

David J. Gordinier, P.E.
Project Engineer

ECS Mid-Atlantic, LLC
108 Ingram Road
Suite 1
Williamsburg, VA 23188
(757) 229-6677

FIELD REPORT

Project No.	07:10562
Report No.	4
Day & Date	Wednesday 02/24/2010
Weather	45°/ Cloudy
On-Site Time	1.00
Lab Time	0.50
Travel Time*	0.25
Total	1.75
Re Obs.Time	0.00

Project	Mediterranean Restaurant
Location	Williamsburg, VA
Client	Janice M. Ortalan

Remarks

Trip Charges* Tolls/Parking* Mileage* 5

Chargeable Items

Time of	Arrival	Departure
	03:00P	04:00P

* Travel time and mileage will be billed in accordance with the contract.

Summary of Services Performed (field test data, locations, elevations & depths are estimates) & Individuals Contacted.

The undersigned arrived on site, as requested, to observe the placement and compaction of soils for CLAY KEY FOR THE DAM. Please see the attached sketch.

Utilizing the nuclear test method (ASTM D-2922) to check the compaction of soils; test results indicated that the compacted material, at the areas and elevations tested, met or exceeded the project requirements of (95%) of the maximum dry density as obtained in our laboratory using the Standard Proctor Method (ASTM D-698). Locations and elevations of all tests are based on stakeout provided by others. We cannot be responsible for structures located off of the observed engineered pad, misaligned utilities or stakeout errors causing uncontrolled fill to be placed in structural areas. The soils observed on this date appeared to be placed in accordance with project drawings and specifications with regard to lift thickness and moisture content.

By **Clovis R. Sullivan** 1700

142263

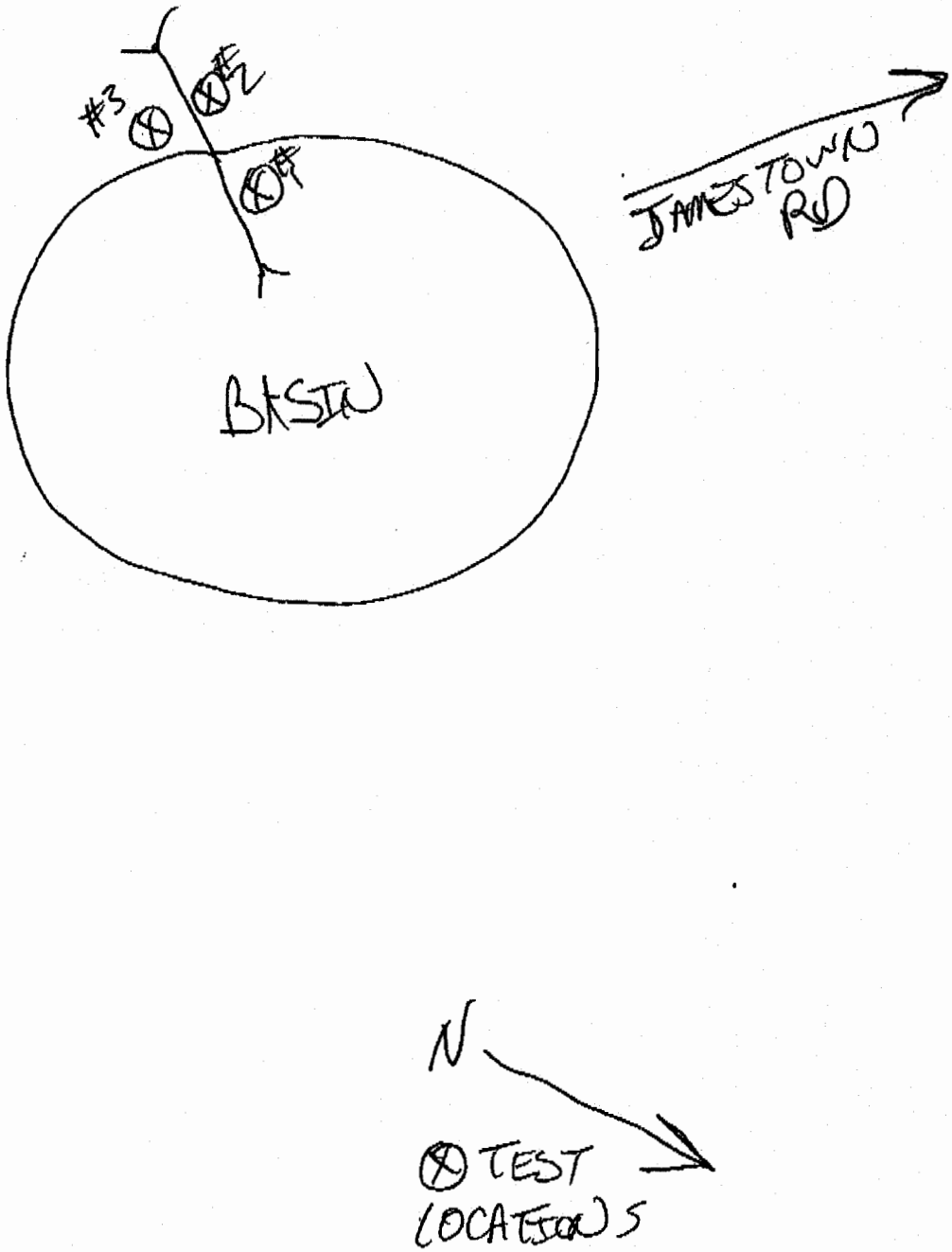

LOCATION: JAMESTOWN RD & SANDY BAY RD

TECHNICIAN: CRS

DATE: 2/24/10 WEDNESDAY

ECS LLC MID-ATLANTIC

SITE DRAWING

ECS PROJECT NAME: MEDITARRANEAN REST

ECS PROJECT NO.: 10562

WORK ORDER ID #: 49527

ECS MID-ATLANTIC, LLC

Field Compaction Summary, ASTM D6938

Project No: 10562 Project Name: Mediterranean Restaurant Date: 02/24/10

Client:

Contractor: None Listed

Technician: Clovis R. Sullivan

Test Method ASTM D6938			
Nuclear Gauge No.7081			
Make		Density Std	38932
Model		Moisture Std	9546
Ser. No.	MD30707081		

Sample: **11** Description: **clay** Proctor Method: **Standard Proctor Method (ASTM D-698)** Uncorrected Max. Density: **108.30** Uncorrected Opt. MC: **20.10**

Test No.	Test Mode	Probe Depth	Station / Location	Lift / Elev	% Oversize	Corrected Maximum Dry Density (pcf)	Corrected Optimum Moisture Content (%)	Test Data				P / F	GPS Longtitude GPS Latitude	Comments
								Wet Density (pcf)	Dry Density (pcf)	Moisture Content (%)	Percent Comp. (%)			
1	DT	8	CLAY KEY FOR THE DAM	4ft below	0.00	108.30	20.10	127.5	107.4	18.8	99.2	P	no GPS Lat no GPS Lat	
2	DT	8	CLAY KEY FOR THE DAM	4ft below	0.00	108.30	20.10	124.0	105.1	18.0	97.0	P	no GPS Lat no GPS Lat	
3	DT	8	CLAY KEY FOR THE DAM	4ft below	0.00	108.30	20.10	124.6	104.3	19.5	96.3	P	no GPS Lat no GPS Lat	

Test Mode: DT = Direct Transmission BS = Back Scatter

WO:49527

ECS Mid-Atlantic, LLC
108 Ingram Road
Suite 1
Williamsburg, VA 23188
(757) 229-6677

LETTER OF TRANSMITTAL

March 1, 2010

Mrs Janice M Ortalan
109 Indigo Dam Road
Williamsburg, VA 23188

RE: **Mediterranean Restaurant Cmt**

ECS Job # **07:10599**

Permits:

Location: **1184 Jamestown Road**
Williamsburg, VA

We are enclosing:

X Materials Engineering Division Reports
X For your use
X As requested

ENCL:

Field Report # 3	02/26/2010	compaction testing

COMMONWEALTH OF VIRGINIA
B. SCOTT GRESHAM
Lic. No. 037785
PROFESSIONAL ENGINEER
FEB 28 2010

Scott Gresham, P.E.
Construction Services Manager

J. David Eakes

James D. Eakes, E.I.T.
Project Engineer

ECS Mid-Atlantic, LLC
108 Ingram Road
Suite 1
Williamsburg, VA 23188
(757) 229-6677

FIELD REPORT

Project No.	07:10599
Report No.	3
Day & Date	Friday 02/26/2010
Weather	38°/ Cloudy
On-Site Time	0.75
Lab Time	0.50
Travel Time*	0.50
Total	1.75
Re Obs.Time	0.00

Project	Mediterranean Restaurant Cmt
Location	Williamsburg, VA
Client	Janice M. Ortalan

Remarks **compaction testing**

Trip Charges* Tolls/Parking* Mileage* 10

Chargeable Items

Time of	Arrival	Departure
	08:00A	08:45A

* Travel time and mileage will be billed in accordance with the contract.

Summary of Services Performed (field test data, locations, elevations & depths are estimates) & Individuals Contacted.

The undersigned senior engineering technician arrived on site, as requested, to observe the placement and compaction of soils for the keyway of the pond. Please see the attached sketch.

The Nuclear Method (ASTM D-2922) was used to check the compaction of soils. Test results indicated that the compacted material, at the areas and elevations tested, met or exceeded the project requirements of 95 % of the maximum dry density as obtained in our laboratory by using the Standard Proctor Method (ASTM D-698).

By **Samuel B. Lackey** 1700

142352

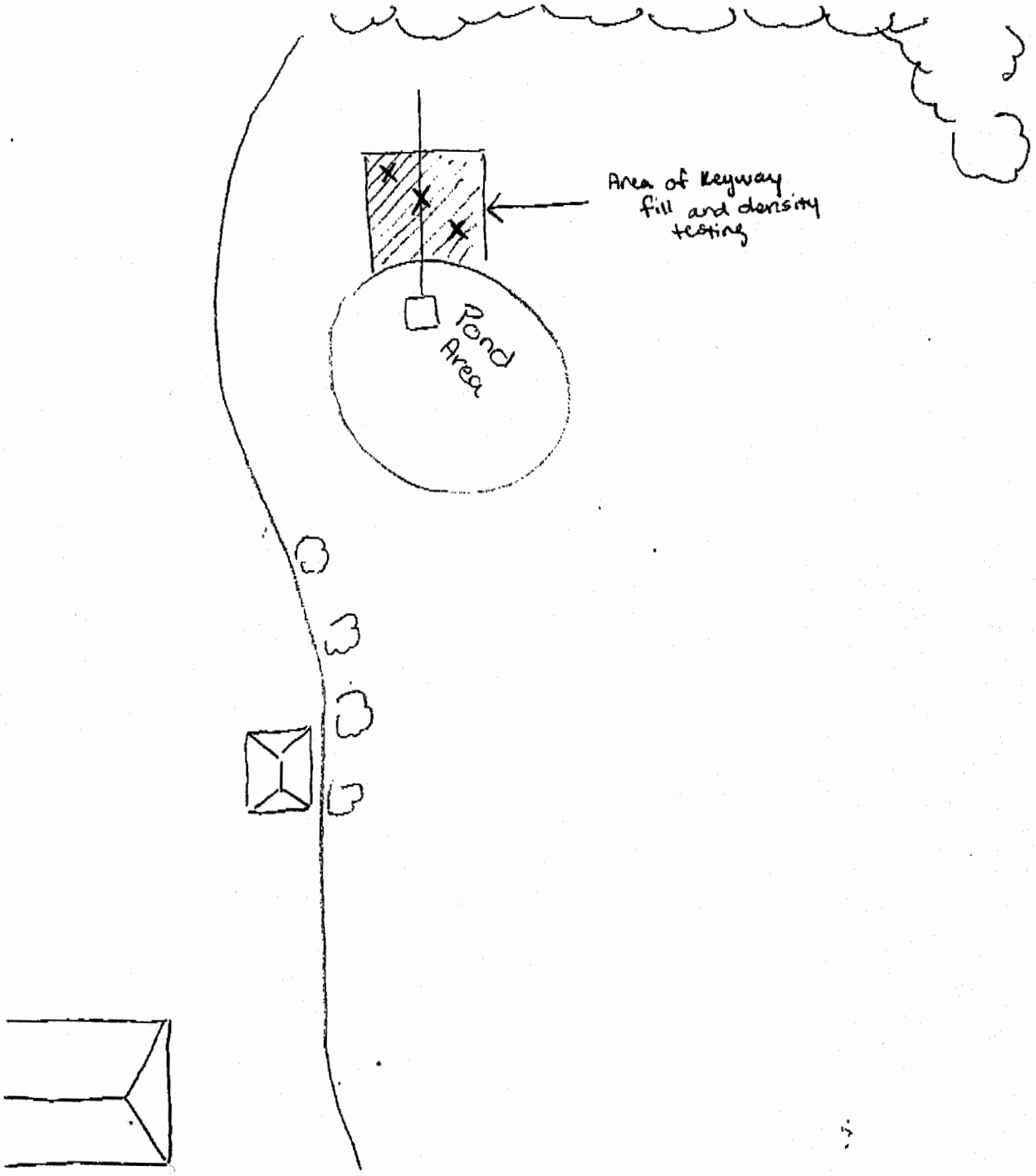

LOCATION:

TECHNICIAN: 2/26/2010

DATE: 2/26/2010 SBL

ECS LLC MID-ATLANTIC

SITE DRAWING

ECS PROJECT NAME: Mediterranean Restaurant

ECS PROJECT NO.: 10599

WORK ORDER ID #: 49560

ECS MID-ATLANTIC, LLC

Field Compaction Summary, ASTM D-2922

Project No: 10599 Project Name: Mediterranean Restaurant Cmt Date: 02/26/10

Client:

Contractor: None Listed

Technician: Samuel B. Lackey

Test Method ASTM D-2922			
Nuclear Gauge No.28971			
Make	Troxler	Density Std	2310
Model	3440	Moisture Std	635
Ser. No.	28971		

Sample: **B-1/1pt** Description: **Sandy FAT CLAY Grey-Brown (CH)** Proctor Method: **Standard Proctor Method (ASTM D-698)** Uncorrected Max. Density: **104.70** Uncorrected Opt. MC: **19.20**

Test No.	Test Mode	Probe Depth	Station / Location	Lift / Elev	% Oversize	Corrected Maximum Dry Density (pcf)	Corrected Optimum Moisture Content (%)	Test Data				P / F	GPS Longtitude GPS Latitude	Comments
								Wet Density (pcf)	Dry Density (pcf)	Moisture Content (%)	Percent Comp. (%)			
1	DT	6	pond keyway	1	0.00	104.70	19.20	124.3	106.3	16.9	102	P	no GPS Lat no GPS Lat	
2	DT	6	pond keyway	2	0.00	104.70	19.20	122.0	103.8	17.5	99.1	P	no GPS Lat no GPS Lat	
3	DT	6	pond keyway	3	0.00	104.70	19.20	120.5	102.2	17.9	97.6	P	no GPS Lat no GPS Lat	

Test Mode: DT = Direct Transmission BS = Back Scatter

WO:49560

ECS Mid-Atlantic, LLC
108 Ingram Road
Suite 1
Williamsburg, VA 23188
(757) 229-6677

LETTER OF TRANSMITTAL

March 3, 2010

Mrs Janice M Ortalan
109 Indigo Dam Road
Williamsburg, VA 23188

RE: **Mediterranean Restaurant Cmt**

ECS Job # **07:10599**

Permits:

Location: **1184 Jamestown Road**
Williamsburg, VA

We are enclosing:

X Materials Engineering Division Reports
X For your use
X As requested

ENCL:

Field Report # 4	03/02/2010	compaction testing

COMMONWEALTH OF VIRGINIA
B. SCOTT GRESHAM
Lic. No. 037785
PROFESSIONAL ENGINEER

Scott Gresham, P.E.
Construction Services Manager

MAR 2 2010

J. David Eakes

James D. Eakes, E.I.T.
Project Engineer

ECS Mid-Atlantic, LLC
108 Ingram Road
Suite 1
Williamsburg, VA 23188
(757) 229-6677

FIELD REPORT

Project No.	07:10599
Report No.	4
Day & Date	Tuesday 03/02/2010
Weather	40°/ Cloudy
On-Site Time	1.00
Lab Time	0.50
Travel Time*	0.50
Total	2.00
Re Obs.Time	0.00

Project	Mediterranean Restaurant Cmt
Location	Williamsburg, VA
Client	Janice M. Ortalan

Remarks **compaction testing**

Trip Charges* Tolls/Parking* Mileage* **10**

Chargeable Items

Times of	Arrival	Departure
	08:00A	08:30A
	12:00P	12:30P

* Travel time and mileage will be billed in accordance with the contract.

Summary of Services Performed (field test data, locations, elevations & depths are estimates) & Individuals Contacted.

The undersigned engineering technician arrived on site, as requested, to observe the placement and compaction of soils for the backfilling of the storm drain trench between D.I.#5 and SS#2.

The Nuclear Method (ASTM D-2922) was used to check the compaction of soils. Test results indicated that the compacted material, at the areas and elevations tested, met or exceeded the project requirements of 95% of the maximum dry density as obtained in our laboratory by using the Standard Proctor Method (ASTM D-698).

By **Ryan Andrew Reynolds** 1800

142417

ECS MID-ATLANTIC, LLC

Field Compaction Summary, ASTM D-2922

Project No: 10599 Project Name: Mediterranean Restaurant Cmt Date: 03/02/10

Client:

Contractor: None Listed

Technician: Ryan Andrew Reynolds

Test Method ASTM D-2922			
Nuclear Gauge No. 14386			
Make	Troxler	Density Std	2327
Model	3440	Moisture Std	644
Ser. No.	14386		

Sample: **B-1/1pt** Description: **Sandy FAT CLAY Grey-Brown (CH)** Proctor Method: **Standard Proctor Method (ASTM D-698)** Uncorrected Max. Density: **104.70** Uncorrected Opt. MC: **19.20**

Test No.	Test Mode	Probe Depth	Station / Location	Lift / Elev	% Oversize	Corrected Maximum Dry Density (pcf)	Corrected Optimum Moisture Content (%)	Test Data: Wet Density (pcf)	Dry Density (pcf)	Moisture Content (%)	Percent Comp. (%)	P / F	GPS Longtitude GPS Latitude	Comments
1	DT	8	from drain structure 5 to structure 4	3rd lift	0.00	104.70	19.20	126.7	105.7	19.9	101	P	no GPS Lat no GPS Lat	
2	DT	8	from drain structure 5 to DI 4	3rd lift	0.00	104.70	19.20	124.2	104.7	18.7	100	P	no GPS Lat no GPS Lat	
3	DT	8	from drain structure DI 4 to 3	2nd lift	0.00	104.70	19.20	123.4	104.5	18.1	99.8	P	no GPS Lat no GPS Lat	
4	DT	8	from drain structure DI 4 to 3	2nd lift	0.00	104.70	19.20	121.7	106.0	14.8	101	P	no GPS Lat no GPS Lat	
5	DT	8	from drain structure DI 3 to 2	2nd lift	0.00	104.70	19.20	112.2	99.8	12.5	95.3	P	no GPS Lat no GPS Lat	

Test Mode: DT = Direct Transmission BS = Back Scatter

WO:49619

ECS Mid-Atlantic, LLC
108 Ingram Road
Suite 1
Williamsburg, VA 23188
(757) 229-6677

LETTER OF TRANSMITTAL

February 15, 2010

Mrs Janice M Ortalan
109 Indigo Dam Road
Williamsburg, VA 23188

RE: **Mediterranean Restaurant**

ECS Job # **07:10562**

Permits:

Location: **Jamestown Road and Sandy Bay Road**
Williamsburg, VA

We are enclosing:

X Materials Engineering Division Reports
X For your use
X As requested

ENCL:

Field Report # 3 02/12/2010

Michael J. Galli, Vice President
Principal Engineer

FEB 15 2010

David J. Gordinier, P.E.
Project Engineer

ECS Mid-Atlantic, LLC
108 Ingram Road
Suite 1
Williamsburg, VA 23188
(757) 229-6677

FIELD REPORT

Project No.	07:10562
Report No.	3
Day & Date	Friday 02/12/2010
Weather	40°/ Sunny
On-Site Time	0.50
Lab Time	0.50
Travel Time*	0.50
Total	1.50
Re Obs.Time	0.00

Project	Mediterranean Restaurant
Location	Williamsburg, VA
Client	Janice M. Ortalan

Remarks

Trip Charges* Tolls/Parking* Mileage* 10

Chargeable Items

Time of	Arrival	Departure
	12:45P	01:15P

* Travel time and mileage will be billed in accordance with the contract.

Summary of Services Performed (field test data, locations, elevations & depths are estimates) & Individuals Contacted.

The undersigned arrived on site, as requested, to collect a soil sample for Proctor Testing. The sample was collected from the sediment basin area and transported to the ECS LABORATORY for testing.

By **Clovis R. Sullivan** 1700

141730

ECS Mid-Atlantic, LLC
108 Ingram Road
Suite 1
Williamsburg, VA 23188
(757) 229-6677

LETTER OF TRANSMITTAL

February 26, 2010 Mrs Janice M Ortalan 109 Indigo Dam Road Williamsburg, VA 23188	RE: **Mediterranean Restaurant** ECS Job # **07:10562** Permits: Location: **Jamestown Road and Sandy Bay Road** **Williamsburg, VA**

We are enclosing:

X Materials Engineering Division Reports
X For your use
X As requested

ENCL:

Field Report # 4 02/24/2010

Michael J. Galli, Vice President
Principal Engineer

FEB 25 2010

David J. Gordinier, P.E.
Project Engineer

ECS Mid-Atlantic, LLC
108 Ingram Road
Suite 1
Williamsburg, VA 23188
(757) 229-6677

FIELD REPORT

Project No.	07:10562
Report No.	4
Day & Date	Wednesday 02/24/2010
Weather	45°/ Cloudy
On-Site Time	1.00
Lab Time	0.50
Travel Time*	0.25
Total	1.75
Re Obs.Time	0.00

Project	Mediterranean Restaurant
Location	Williamsburg, VA
Client	Janice M. Ortalan

Remarks

Trip Charges* Tolls/Parking* Mileage* 5

Chargeable Items

Time of	Arrival	Departure
	03:00P	04:00P

* Travel time and mileage will be billed in accordance with the contract.

Summary of Services Performed (field test data, locations, elevations & depths are estimates) & Individuals Contacted.

The undersigned arrived on site, as requested, to observe the placement and compaction of soils for CLAY KEY FOR THE DAM. Please see the attached sketch.

Utilizing the nuclear test method (ASTM D-2922) to check the compaction of soils; test results indicated that the compacted material, at the areas and elevations tested, met or exceeded the project requirements of (95%) of the maximum dry density as obtained in our laboratory using the Standard Proctor Method (ASTM D-698). Locations and elevations of all tests are based on stakeout provided by others. We cannot be responsible for structures located off of the observed engineered pad, misaligned utilities or stakeout errors causing uncontrolled fill to be placed in structural areas. The soils observed on this date appeared to be placed in accordance with project drawings and specifications with regard to lift thickness and moisture content.

By **Clovis R. Sullivan** 1700

142263

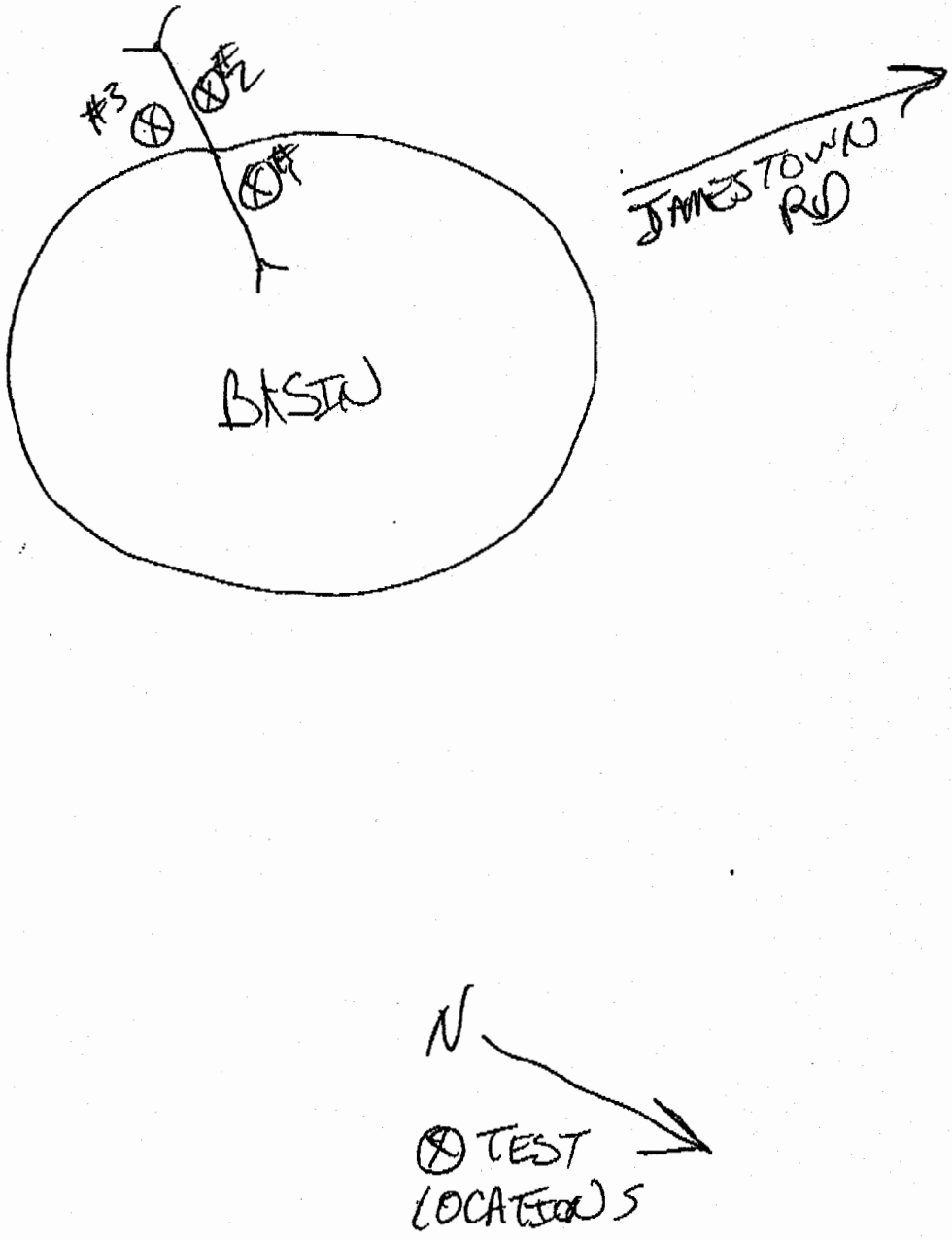

LOCATION: JAMESTOWN RD & SANDY BAY RD

TECHNICIAN: CRS

DATE: 2/24/10 WEDNESDAY

ECS LLC MID-ATLANTIC

SITE DRAWING

ECS PROJECT NAME: MEDITARRANEAN REST

ECS PROJECT NO.: 10562

WORK ORDER ID #: 49527

ECS LLC MID-ATLANTIC

ECS MID-ATLANTIC, LLC

Field Compaction Summary, ASTM D6938

Project No: 10562 Project Name: Mediterranean Restaurant Date: 02/24/10

Client:

Contractor: None Listed

Technician: Clovis R. Sullivan

Test Method ASTM D6938			
Nuclear Gauge No.7081			
Make		Density Std	38932
Model		Moisture Std	9546
Ser. No.	MD30707081		

Sample: **11** Description: **clay** Proctor Method: **Standard Proctor Method (ASTM D-698)** Uncorrected Max. Density: **108.30** Uncorrected Opt. MC: **20.10**

Test No.	Test Mode	Probe Depth	Station / Location	Lift / Elev	% Oversize	Corrected Maximum Dry Density (pcf)	Corrected Optimum Moisture Content (%)	Test Data				P / F	GPS Longtitude GPS Latitude	Comments
								Wet Density (pcf)	Dry Density (pcf)	Moisture Content (%)	Percent Comp. (%)			
1	DT	8	CLAY KEY FOR THE DAM	4ft below	0.00	108.30	20.10	127.5	107.4	18.8	99.2	P	no GPS Lat no GPS Lat	
2	DT	8	CLAY KEY FOR THE DAM	4ft below	0.00	108.30	20.10	124.0	105.1	18.0	97.0	P	no GPS Lat no GPS Lat	
3	DT	8	CLAY KEY FOR THE DAM	4ft below	0.00	108.30	20.10	124.6	104.3	19.5	96.3	P	no GPS Lat no GPS Lat	

Test Mode: DT = Direct Transmission BS = Back Scatter

WO:49527

ECS Mid-Atlantic, LLC
108 Ingram Road
Suite 1
Williamsburg, VA 23188
(757) 229-6677

LETTER OF TRANSMITTAL

March 1, 2010	RE: **Mediterranean Restaurant Cmt**
Mrs Janice M Ortalan 109 Indigo Dam Road Williamsburg, VA 23188	ECS Job # **07:10599** Permits: Location: **1184 Jamestown Road** **Williamsburg, VA**

We are enclosing:

X Materials Engineering Division Reports
X For your use
X As requested

ENCL:

Field Report # 3	02/26/2010	compaction testing

COMMONWEALTH OF VIRGINIA
B. SCOTT GRESHAM
Lic. No. 037785
PROFESSIONAL ENGINEER

FEB 28 2010

Scott Gresham, P.E.
Construction Services Manager

J. David Eakes

James D. Eakes, E.I.T.
Project Engineer

ECS Mid-Atlantic, LLC
108 Ingram Road
Suite 1
Williamsburg, VA 23188
(757) 229-6677

FIELD REPORT

Project No.	07:10599
Report No.	3
Day & Date	Friday 02/26/2010
Weather	38°/ Cloudy
On-Site Time	0.75
Lab Time	0.50
Travel Time*	0.50
Total	1.75
Re Obs.Time	0.00

Project	Mediterranean Restaurant Cmt
Location	Williamsburg, VA
Client	Janice M. Ortalan

Remarks **compaction testing**

Trip Charges* Tolls/Parking* Mileage* **10**

Chargeable Items

Time of	Arrival	Departure
	08:00A	08:45A

* Travel time and mileage will be billed in accordance with the contract.

Summary of Services Performed (field test data, locations, elevations & depths are estimates) & Individuals Contacted.

The undersigned senior engineering technician arrived on site, as requested, to observe the placement and compaction of soils for the keyway of the pond. Please see the attached sketch.

The Nuclear Method (ASTM D-2922) was used to check the compaction of soils. Test results indicated that the compacted material, at the areas and elevations tested, met or exceeded the project requirements of 95 % of the maximum dry density as obtained in our laboratory by using the Standard Proctor Method (ASTM D-698).

By **Samuel B. Lackey** 1700

142352

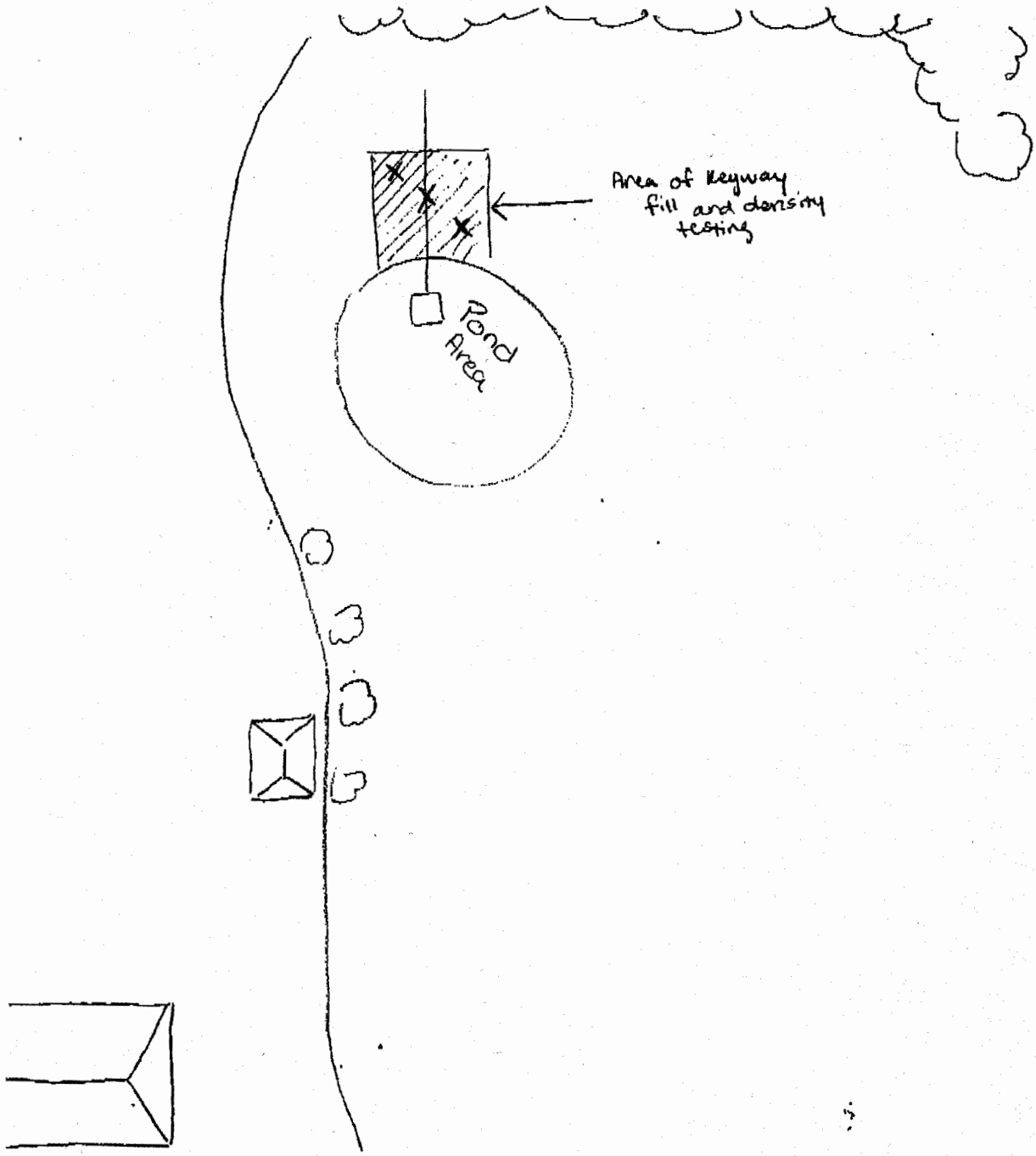

LOCATION:

TECHNICIAN: 2/26/2010

DATE: 2/26/2010 SBL

ECS LLC MID-ATLANTIC

SITE DRAWING

ECS PROJECT NAME: Mediterranean Restaurant

ECS PROJECT NO.: 10599

WORK ORDER ID #: 49560

ECS LLC MID-ATLANTIC

ECS MID-ATLANTIC, LLC

Field Compaction Summary, ASTM D-2922

Project No: 10599 Project Name: Mediterranean Restaurant Cmt Date: 02/26/10

Client:

Contractor: None Listed

Technician: Samuel B. Lackey

Test Method ASTM D-2922			
Nuclear Gauge No.28971			
Make	Troxler	Density Std	2310
Model	3440	Moisture Std	635
Ser. No.	28971		

Sample: **B-1/1pt** Description: **Sandy FAT CLAY Grey-Brown (CH)** Proctor Method: **Standard Proctor Method (ASTM D-698)** Uncorrected Max. Density: **104.70** Uncorrected Opt. MC: **19.20**

Test No.	Test Mode	Probe Depth	Station / Location	Lift / Elev	% Oversize	Corrected Maximum Dry Density (pcf)	Corrected Optimum Moisture Content (%)	Test Data				P / F	GPS Longtitude GPS Latitude	Comments
								Wet Density (pcf)	Dry Density (pcf)	Moisture Content (%)	Percent Comp. (%)			
1	DT	6	pond keyway	1	0.00	104.70	19.20	124.3	106.3	16.9	102	P	no GPS Lat no GPS Lat	
2	DT	6	pond keyway	2	0.00	104.70	19.20	122.0	103.8	17.5	99.1	P	no GPS Lat no GPS Lat	
3	DT	6	pond keyway	3	0.00	104.70	19.20	120.5	102.2	17.9	97.6	P	no GPS Lat no GPS Lat	

Test Mode: DT = Direct Transmission BS = Back Scatter

WO:49560

ECS Mid-Atlantic, LLC
108 Ingram Road
Suite 1
Williamsburg, VA 23188
(757) 229-6677

LETTER OF TRANSMITTAL

March 3, 2010

Mrs Janice M Ortalan
109 Indigo Dam Road
Williamsburg, VA 23188

RE: **Mediterranean Restaurant Cmt**

ECS Job # **07:10599**

Permits:

Location: **1184 Jamestown Road**
Williamsburg, VA

We are enclosing:

X Materials Engineering Division Reports
X For your use
X As requested

ENCL:

Field Report # 4	03/02/2010	compaction testing

COMMONWEALTH OF VIRGINIA
B. SCOTT GRESHAM
Lic. No. 037785
PROFESSIONAL ENGINEER

MAR 2 2010

Scott Gresham, P.E.
Construction Services Manager

J. D. Eakes

James D. Eakes, E.I.T.
Project Engineer

ECS Mid-Atlantic, LLC
108 Ingram Road
Suite 1
Williamsburg, VA 23188
(757) 229-6677

FIELD REPORT

Project No.	07:10599
Report No.	4
Day & Date	Tuesday 03/02/2010
Weather	40°/ Cloudy
On-Site Time	1.00
Lab Time	0.50
Travel Time*	0.50
Total	2.00
Re Obs.Time	0.00

Project	Mediterranean Restaurant Cmt
Location	Williamsburg, VA
Client	Janice M. Ortalan

Remarks **compaction testing**

Trip Charges* Tolls/Parking* Mileage* 10

Chargeable Items

Times of	Arrival	Departure
	08:00A	08:30A
	12:00P	12:30P

* Travel time and mileage will be billed in accordance with the contract.

Summary of Services Performed (field test data, locations, elevations & depths are estimates) & Individuals Contacted.

The undersigned engineering technician arrived on site, as requested, to observe the placement and compaction of soils for the backfilling of the storm drain trench between D.I.#5 and SS#2.

The Nuclear Method (ASTM D-2922) was used to check the compaction of soils. Test results indicated that the compacted material, at the areas and elevations tested, met or exceeded the project requirements of 95% of the maximum dry density as obtained in our laboratory by using the Standard Proctor Method (ASTM D-698).

By **Ryan Andrew Reynolds** 1800

142417

ECS MID-ATLANTIC, LLC

Field Compaction Summary, ASTM D-2922

Project No: 10599 Project Name: Mediterranean Restaurant Cmt Date: 03/02/10

Client:

Contractor: None Listed

Technician: Ryan Andrew Reynolds

Test Method ASTM D-2922			
Nuclear Gauge No. 14386			
Make	Troxler	Density Std	2327
Model	3440	Moisture Std	644
Ser. No.	14386		

Sample: **B-1/1pt** Description: **Sandy FAT CLAY Grey-Brown (CH)** Proctor Method: **Standard Proctor Method (ASTM D-698)** Uncorrected Max. Density: **104.70** Uncorrected Opt. MC: **19.20**

Test No.	Test Mode	Probe Depth	Station / Location	Lift / Elev	% Oversize	Corrected Maximum Dry Density (pcf)	Corrected Optimum Moisture Content (%)	Test Data				P / F	GPS Longtitude GPS Latitude	Comments
								Wet Density (pcf)	Dry Density (pcf)	Moisture Content (%)	Percent Comp. (%)			
1	DT	8	from drain structure 5 to structure 4	3rd lift	0.00	104.70	19.20	126.7	105.7	19.9	101	P	no GPS Lat no GPS Lat	
2	DT	8	from drain structure 5 to DI 4	3rd lift	0.00	104.70	19.20	124.2	104.7	18.7	100	P	no GPS Lat no GPS Lat	
3	DT	8	from drain structure DI 4 to 3	2nd lift	0.00	104.70	19.20	123.4	104.5	18.1	99.8	P	no GPS Lat no GPS Lat	
4	DT	8	from drain structure DI 4 to 3	2nd lift	0.00	104.70	19.20	121.7	106.0	14.8	101	P	no GPS Lat no GPS Lat	
5	DT	8	from drain structure DI 3 to 2	2nd lift	0.00	104.70	19.20	112.2	99.8	12.5	95.3	P	no GPS Lat no GPS Lat	

Test Mode: DT = Direct Transmission BS = Back Scatter

WO:49619

Soil Map–James City and York Counties and the City of Williamsburg, Virginia
(1784 JAMESTOWN ROAD)

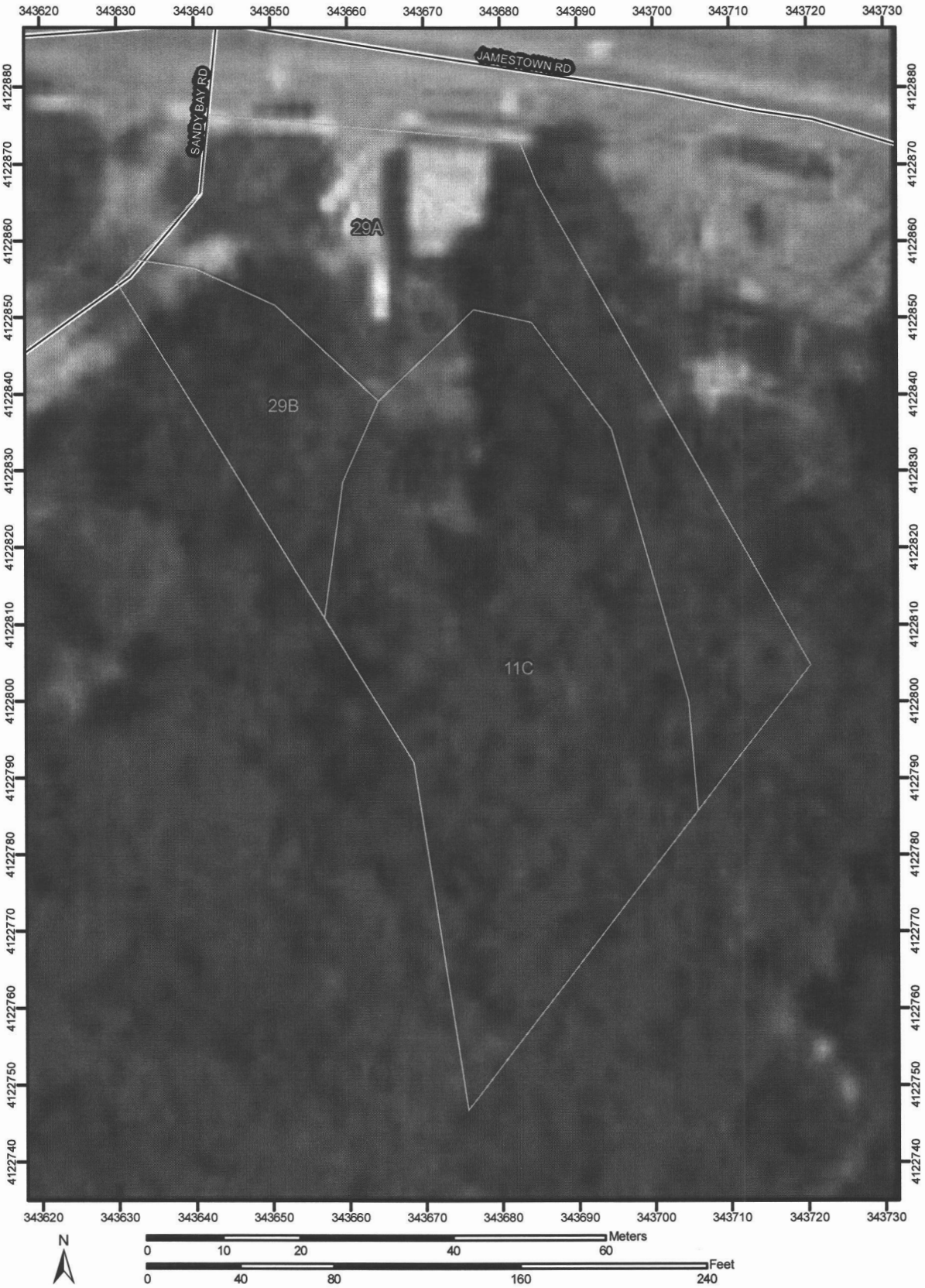

MAP LEGEND

Area of Interest (AOI)
- Area of Interest (AOI)

Soils
- Soil Map Units

Special Point Features
- Blowout
- Borrow Pit
- Clay Spot
- Closed Depression
- Gravel Pit
- Gravelly Spot
- Landfill
- Lava Flow
- Marsh
- Mine or Quarry
- Miscellaneous Water
- Perennial Water
- Rock Outcrop
- Saline Spot
- Sandy Spot
- Severely Eroded Spot
- Sinkhole
- Slide or Slip
- Sodic Spot
- Spoil Area
- Stony Spot
- Very Stony Spot
- Wet Spot
- Other

Special Line Features
- Gully
- Short Steep Slope
- Other

Political Features

Municipalities
- Cities
- Urban Areas

Water Features
- Oceans
- Streams and Canals

Transportation
- Rails

Roads
- Interstate Highways
- US Routes
- State Highways
- Local Roads
- Other Roads

MAP INFORMATION

Original soil survey map sheets were prepared at publication scale. Viewing scale and printing scale, however, may vary from the original. Please rely on the bar scale on each map sheet for proper map measurements.

Source of Map: Natural Resources Conservation Service
Web Soil Survey URL: http://websoilsurvey.nrcs.usda.gov
Coordinate System: UTM Zone 18N

This product is generated from the USDA-NRCS certified data as of the version date(s) listed below.

Soil Survey Area: James City and York Counties and the City of Williamsburg, Virginia
Survey Area Data: Version 9, Dec 18, 2007

Date(s) aerial images were photographed: 3/17/1990

The orthophoto or other base map on which the soil lines were compiled and digitized probably differs from the background imagery displayed on these maps. As a result, some minor shifting of map unit boundaries may be evident.

Map Unit Legend

James City and York Counties and the City of Williamsburg, Virginia (VA695)			
Map Unit Symbol	**Map Unit Name**	**Acres in AOI**	**Percent of AOI**
11C	Craven-Uchee complex, 6 to 10 percent slopes	0.7	53.0%
29A	Slagle fine sandy loam, 0 to 2 percent slopes	0.5	35.3%
29B	Slagle fine sandy loam, 2 to 6 percent slopes	0.2	11.8%
Totals for Area of Interest (AOI)		1.4	100.0%

Darryl Cook

From: Darryl Cook
Sent: Tuesday, July 13, 2010 9:30 AM
To: 'SGresham'
Subject: RE: Mediterranean Restaurant CMT reports

Scott, I need the construction certification form signed. It can be found at:
http://www.jccegov.com/pdf/stormwater/RecDwg_CertConst.pdf

I have received the record drawing certification already – you can just fill out one for your part and send it to me. Thanks.

From: SGresham [mailto:SGresham@ecslimited.com]
Sent: Friday, July 09, 2010 2:06 PM
To: Darryl Cook
Subject: Mediterranean Restaurant CMT reports

Darryl,

Attached are the field reports for the materials testing at the Mediterranean Restaurant.

Call me if you have any questions or if I can be of further assistance.

Thanks,

B. Scott Gresham, P.E.
Construction Services Manager

ECS Mid-Atlantic, LLC
108 Ingram Road, Suite 1, Williamsburg, VA 23188
T: 757-229-6677 F: 757-229-9978 C: 757-342-1297
sgresham@ecslimited.com
- www.ecslimited.com

Ranked in ENR's Top 100 Design Firms

This message, including any attachment hereto, is confidential and proprietary. If you are not the named recipient, you are kindly requested to notify the sender immediately and to delete this message, including any attachment, from your system. You are not allowed to copy, use, or maintain this message, and the contents hereof must not be disclosed to any other person.

Development Management
101-A Mounts Bay Road
P.O. Box 8784
Williamsburg, VA 23187-8784
P: 757-253-6671
F: 757-253-6822
devman@james-city.va.us

jccEgov.com

Code Compliance
(757) 253-6620
codecomp@james-city.va.us

Environmental Division
(757) 253-6670
environ@james-city.va.us

Planning and Zoning
(757) 253-6685
planning@james-city.va.us

Mrs. Janice Ontalu
109 Indigo Dam Road
Williamsburg, Virginia 23188

May 25, 2010

Subject: Mediterranean Restaurant BMP

Dear Mrs. Ontalu:

The Environmental Divisions has received a record drawing (as-built) for the stormwater management facility for the above referenced project. The record drawing provides as-built information for a wet pond retention BMP located on the.

Based on our review of the project and a concurrent field inspection as performed on May 21, 2010, the following items must be addressed prior to release or reduction of the developer's surety instrument for the stormwater management/BMP facility at the site and to proceed with closing out the project.

Record Drawing:

1. The record drawing set dated 5/07/2010 has a discrepancy. The record drawing does not show the six inch pipe that is installed as a slope drain leading into from the parking lot side of the BMP into the BMP. There is no indication where this pipe originates.

Construction Certification:

1. On sheet C-9, Item #20 a ***Construction Certification*** is required, this item is missing from the as built files submitted to this office.
2. In addition to the item in #1 the geo technical information for soil compaction of all storm water pipe installation has not been submitted by the third party inspector.

Construction - Related Items:

1. Remove Silt Fence and hay bales from the downstream channel of the outfall.
2. Apply more stabilization to areas that need stabilized.
3. Repair all erosion occurring on the inside parameter of the BMP.
4. Area around structure and 24 inch RCP is eroding at the base.
5. Micro pool appears to be full of sediment. The sediment needs to be removed.

6. Sediment fore bay is not constructed per plan. Plan calls for Class 1 rip rap. Everything but Class 1 is used. Sediment fore bay needs to be reconstructed per to the approved plan.
7. Outfall is not constructed per plan. More stone needs to be added and arranged per plan. All stone must be placed at an elevation below the flared end of the outfall.
8. Clean all trash and debris from the interior of the basin.

Once this work is satisfactorily completed, contact our office appropriately for a re-inspection. We can then proceed with final release of the surety and/or closing out the project. One reproducible and one blue/black line set of the record drawings will be required once the above items are adequately addressed.

Please contact me at 757-253-6683 if you have any further comments or questions.

Sincerely,

Gregory B. Johnson
Inspector
James City County Environmental

Greg Johnson

From: Scott Thomas
Sent: Friday, January 29, 2010 4:26 PM
To: Jenkins, Kenny
Cc: Greg Johnson
Subject: RE: Mediterranean Restaurant

That was our suspicion based on a hydraulic sense and we agree. We cannot approve a change without supportive computations from an engineer.

From: Jenkins, Kenny [kjenkins@landtechresources.com]
Sent: Friday, January 29, 2010 12:51 PM
To: Scott Thomas
Subject: Mediterranean Restaurant

Scott, I looked at my routing calculations and the outlet barrel operates under inlet control. That being the case I do not think I can let Wayne Reed change the outlet riser without rerouting the calculations and submitting a revised site plan to you for review and approval. Is that how you see it? Thanks.

Kenneth M. Jenkins II, P.E.
LandTech Resources, Inc.
205-E Bulifants Blvd
Williamsburg, VA 23188
Office: 757-565-1677
Fax: 757-565-0782

William Cain

From: Jenkins, Kenny [kjenkins@landtechresources.com]
Sent: Friday, December 12, 2008 1:41 PM
To: William Cain
Subject: Mediterranean Restaurant

Bill, Based on my preliminary calculations the size of the BMP shown on the SUP exhibit appears to adequate and we should not have any surprises in the site design phase. Have a good Christmas and New Year if I don't see you before then.

Kenneth M. Jenkins II, P.E.
LandTech Resources, Inc.
205-E Bulifants Blvd
Williamsburg, VA 23188
Office: 757-565-1677
Fax: 757-565-0782

Darryl Cook

From: Darryl Cook
Sent: Tuesday, July 20, 2010 11:21 AM
To: 'dreed903@aol.com'
Subject: Mediterranean Restaurant

Punch List items for the stormwater BMP –

1. Cleanout the sediment in the micropool at the reverse grade low release pipe. All the sediment needs to be removed down to the concrete sides and bottom of the micropool.
2. There is a eroded area adjacent to the base of riser on the left side of the riser (as viewed when standing over the barrel pipe). This area needs to be investigated to ensure that there is a good connection between the riser and barrel, and then filled with compacted soil and then covered with seed and mulch.
3. Remove sediment and vegetation from the barrel pipe at its outlet. Adjust riprap in the stilling basin in front of the barrel pipe so it is not higher than the invert of the flared end section.
4. The bottom of the forebay is to be constructed of Class I riprap. There are several slabs of broken concrete in the bottom that need to either be removed or broken up so that they conform to Class I size.
5. The elevation of the bottom of the forebay is too high causing sediment and debris to be deposited in the end of the inlet pipe. Adjust the riprap in the bottom of the basin so that it is no higher than the invert of the 15 inch pipe.
6. There is a slope drain entering the forebay adjacent to the 15 inch pipe. What is the purpose of the pipe? If it is intended to remain as a permanent feature, the pipe needs to be reinstalled so that it is straight and buried underground to prevent it from becoming a maintenance problem.

Darryl E. Cook
James City County - County Engineer
287 McLaws Circle, Suite 1
Williamsburg, VA 23185
Phone: 757-259-1442
Fax: 757-259-5833
email: decook@james-city.va.us

ROTH ENVIRONMENTAL, LLC

October 22, 2008

Mr. Kenneth M. Jenkins, P.E.
LandTech Resources, Inc
5810-F Mooretown Road
Williamsburg, VA 23188

RE: 1784 Jamestown Road
Environmental Inventory
Project No. 08-188

Dear Mr. Jenkins:

In accordance with Section 23-10 of James City County's Plan of Development, Roth Environmental, LLC has completed an Environmental Inventory on the referenced parcel in southwestern portion of James City County. The site is located in the southeastern corner of the intersection of Jamestown Road and Sandy Bay Road. The portion of the site that fronts Jamestown Road currently has three structures on it. The rear portion of the site is undeveloped.

The overall regional slope of the site is to the south. Elevations on the site range from 39 feet above mean sea level and slope to elevations as low as 17 feet above mean sea level. Surface flow off the site follows this regional slope to the south.

A copy of this site plan is included with this Environmental Inventory report.

Based on the site review there are no:

- Tidal wetlands;
- Tidal shores;
- Areas of nontidal wetlands connected by surface flow to tidal wetlands;
- Areas within the 100-Year Floodplain.

The site does contain:

- Nontidal wetlands connected by surface flow to waters with perennial flow;
- A Resource Protection Area buffer that extends 100 feet around the wetlands connected by surface flow to waters with perennial flow;
- Nontidal wetlands that are <u>not</u> connected by surface flow to waters with perennial flow;
- Resource Management Areas (all areas outside the RPA).

700 PRESCOTT CIRCLE • NEWPORT NEWS, VIRGINIA 23602
PHONE (757) 814-1048 • FAX (757) 249-2257
EMAIL: rothenv@cox.net

The site was evaluated using the *1987 U.S. Army Corps of Engineers Wetlands Delineation Manual (TR Y-87-1)*. This manual uses three parameters (soils, vegetation, and hydrology) to identify and delineate wetlands.

The limits of nontidal wetlands are situated along the toe of slope of the ravine situated on the southeastern portion of the site. Typical species identified in the wetlands include sweet gum (*Liquidambar styraciflua*), red maple (*Acer rubrum*), ironwood (*Carpinus caroliniana*), netted chain fern (*Woodwardia areolata*), cinnamon fern (*Osmunda cinnamomea*), and lizards tail (*Saururus cernuus*). Soils in the wetlands area are identified as low chroma, mottled, sandy loams (chroma 2 – Munsell Soil Color Charts). Hydrology was observed as water stained leaves, shallow rooting, and drainage patterns in wetlands.

The undeveloped upland areas on the site are maintained yard areas and mixed deciduous hardwood forest. The dominant species in the uplands are tulip tree (*Liriodendron tulipifera*), white oak (*Quercus alba*), dogwood (*Cornus florida*), sweet gum (*Liquidambar styraciflua*), red maple (*Acer rubrum*), sassafras (*Sassafras albidum*), paw paw (*Asimina triloba*), Christmas fern (*Poylstichum acrostichoides*), honeysuckle (*Lonicera japonica*), Kentucky fescue (*Festuca arundinacea*), and grape (*Vitis rotundifolia*). Soils in these uplands are sandy loams and exhibit chromas of 4 and 6 (Munsell Soil Color Charts). No indicators of hydrology were observed in the upland areas.

The wetland areas situated south of Wetland Flag Numbers 5 and 22 are connected by surface flow to a perennial waterbody, as defined by the Department of Conservation and Recreation (DCR). These wetlands require a 100 foot Resource Protection Area (RPA) buffer.

The area immediately north of Wetland Flag Numbers 5 and 22 is vegetated by pawpaw (*Asimina triloba*), a facultative-upland plant. As there are no wetland plants inhabiting the ravine for an area of approximately 40 feet, the 'connected status' of the wetlands to the north is broken. From this point, the wetlands that extend to the north of this demarcation are no longer considered RPA features. The limits of the RPA are depicted on the attached Existing Conditions Map prepared by LandTech Resources, Inc. As outlined in the James City County Ordinance, all areas of the county outside RPA buffers are considered Resource Management Areas (RMA). Both the RPA and RMA areas are depicted on the topographic map included with this report.

According to the Soil Survey of James City and York Counties and the City of Williamsburg, Virginia three soil types occur on the property. These soils consist of Craven-Uchee complex (6 to 10 % slopes), Slagle fine sandy loam (0 to 2% slopes), and Slagle fine sandy loam (2 to 6% slopes). The Craven-Uchee complex soils are mapped on the central and southern portions of the site. Slagle soils (0 to 2 % slopes) are mapped along the northern edge of the site that is developed and along the northeastern edge of the site which is undeveloped. Slagle soils (2 to 6% slopes) are mapped in the northwestern edge of the site. Although Slagle soils (0 to 2% slopes) are found on the higher elevations of the site, the National Resources Conservation Service (NRCS) lists this soil type as hydric.

The entire property is shown on the National Flood Insurance Rate Map (Community Panel 51095C0185C effective date September 28, 2007) produced by FEMA as being in Flood Zone X (areas of 0.2% annual chance flood; areas of 1% annual chance flood with average depths of less than 1 foot or with drainage areas less than 1 square mile; and areas protected by levees from 1% annual chance flood). A flood zone map is included with this report.

Based on the topographic maps and NRCS soils survey, there do not appear to be slopes greater than 25 percent on the site. Should specific areas appear to have slopes that approach 25 percent, Roth Environmental, LLC recommends that these areas be surveyed to determine the specific slope in each particular area.

This concludes the Environmental Inventory of the property located at 1784 Jamestown Road. Should you have any questions or wish to discuss conditions on the property, please call me at 814-1048.

Sincerely,

ROTH ENVIRONMENTAL, LLC.

Matthew A. Roth, P.W.S.
Managing Partner

Enclosures

C:\Roth Environmental, LLC\Projects\2008\08-188.jamestown.1784\2008.10.22.jamestown road.env inv.doc

ROTH ENVIRONMENTAL, LLC
700 PRESCOTT CIRCLE • NEWPORT NEWS, VIRGINIA 23602
PHONE (757) 814-1048 • FAX (757) 249-2257
EMAIL: rothenv@cox.net

ROTH ENVIRONMENTAL, LLC

October 3, 2008

Mr. Michael Woolson
Watershed Planner
James City County
101-E Mounts Bay Road
P.O. Box 8784
Williamsburg, VA 23187-8784

RE: 1784 Jamestown Road
Perennial Stream Evaluation
Resource Protection Area Delineation
Project #08-188

Dear Mr. Woolson:

In accordance with James City County's Chesapeake Bay Preservation Act Ordinance, Roth Environmental, LLC has completed a delineation of perennial streams and Resource Protection Area (RPA) features on the referenced property. The site consists of a partially developed parcel of land at the intersection of Jamestown Road and Sandy Bay Road. The property is located in the southeastern corner of this intersection. It is bordered by residential and commercial development to the east, Jamestown and Sandy Bay Roads to the north, and undeveloped property to the south and west. The size of the project site is approximately 1.25 acres.

Prior to the field investigation, information on the stream system was researched using the James City County GIS mapping, the soil survey, and the U.S.G.S. 7.5 Minute Series Topographic Map for Surry, Virginia. These resources show that an unnamed tributary/wetland area that flows to Powhatan Creek is located along the western edge of the property. This drainage area flows south to Powhatan Creek.

Downstream from the site, the contiguous/connected wetlands of Powhatan Creek are disconnected from the stream system adjacent to the subject site. This stream is disconnected by a berm adjacent to a pump station on Red Oak Landing Road. Downstream of this berm the stream is perennial and the wetlands are connected by surface flow to waters with perennial flow. Upstream of the berm, the stream reaches were assessed for perenniality.

For the field investigation portion of this research, Roth Environmental, LLC has utilized the North Carolina Division of Water Quality (NCDWQ) Stream Classification Method to determine perennial versus intermittent streams. The site investigation was performed on September 29, 2008.

Rainfall data collected by the James City County SCADA network for the station located on Jamestown Road reported 2.91 inches of rain in September. The Palmer Drought Index was also reviewed as part of this investigation to determine drought/nondrought conditions for the area. The drought index shows that the southeastern Virginia region has been in the normal range (-1.99" to +1.99") of the index since April 2008.

In performing this investigation, Roth Environmental, LLC field staff studied an unnamed stream that discharges to Powhatan Creek. Stream classification forms were utilized to assess two stream reaches of the drainage system. During the site investigation, the stream system was studied for primary and secondary field indicators that include areas that drop in elevation, contain riffle-pool sequence areas, contain natural levees, exhibit a sinuous channel, and/or contain braided stream areas. The perennial/intermittent divide is located downstream of

700 PRESCOTT CIRCLE • NEWPORT NEWS, VIRGINIA 23602
PHONE (757) 814-1048 • FAX (757) 249-2257
EMAIL: rothenv@cox.net

the berm that crosses the stream near the pump station. Using the (NCDWQ) Stream Classification Forms, data was collected on the two stream reaches just north of the berm.

The first reach evaluated (SA-1) is the eastern branch of the stream system. This stream originates at a stormwater pond located adjacent to Holly Ridge Lane. The downstream reach of this system was studied for perenniality. The drainage in this area is more of a wetland than a stream channel. In evaluating the area, the score for the assessment was found to be 20. Drainages that score under 28 according to James City County's use of the North Carolina Stream Assessment Methodology are considered intermittent drainages. This area scored predominantly weak indicators for all of the categories and is considered an intermittent stream. Upstream of this assessment point, the stream appeared as a linear wetland with dense vegetation growing within the stream channel.

The second stream reach investigated is located on the main drainage leading from the project site. This stream/wetland area originates in the southern portion of the subject property. The downstream stream reach near the pump station appeared as the area with the strongest indicators for perenniality. This is the area investigated as SA-2. This area scored predominantly weak indicators for all of the categories. Based on a score of 17 using the North Carolina Stream Assessment Methodology, this stream is an intermittent drainage.

The stream area and wetlands downstream of the berm at the pump station are contiguous to and connected by surface flow to Powhatan Creek. The Resource Protection Area buffer is extended from the wetland limit in this area. As the Resource Protection Area features are greater than 100 feet from the property located at 1784 Jamestown Road, no RPA buffers encroach onto this property. The entire site is within the Resource Management Area (RMA).

Enclosed is a copy of the Stream Assessment Map that delineates the intermittent and perennial stream areas. Also included in this submission are site photographs of the stream areas and the Stream Classification Forms. At this time, we are asking for confirmation of the perennial limits of the stream and that the property located at 1784 Jamestown Road is not impacted by an RPA buffer.

Please contact me if you have any questions regarding the investigation or would like to perform a site inspection to view the stream areas.

Sincerely,

ROTH ENVIRONMENTAL, LLC

Matthew Roth, P.W.S.
Managing Partner

Enclosures

cc: LandTech Resources, Inc. – Kenneth Jenkins, II, P.E.

C:\Roth Environmental, LLC\Projects\2008\08-188.jamestown.1784\2008.10.03.woolson.streams.doc

ROTH ENVIRONMENTAL, LLC
700 PRESCOTT CIRCLE • NEWPORT NEWS, VIRGINIA 23602
PHONE (757) 814-1048 • FAX (757) 249-2257
EMAIL: rothenv@cox.net

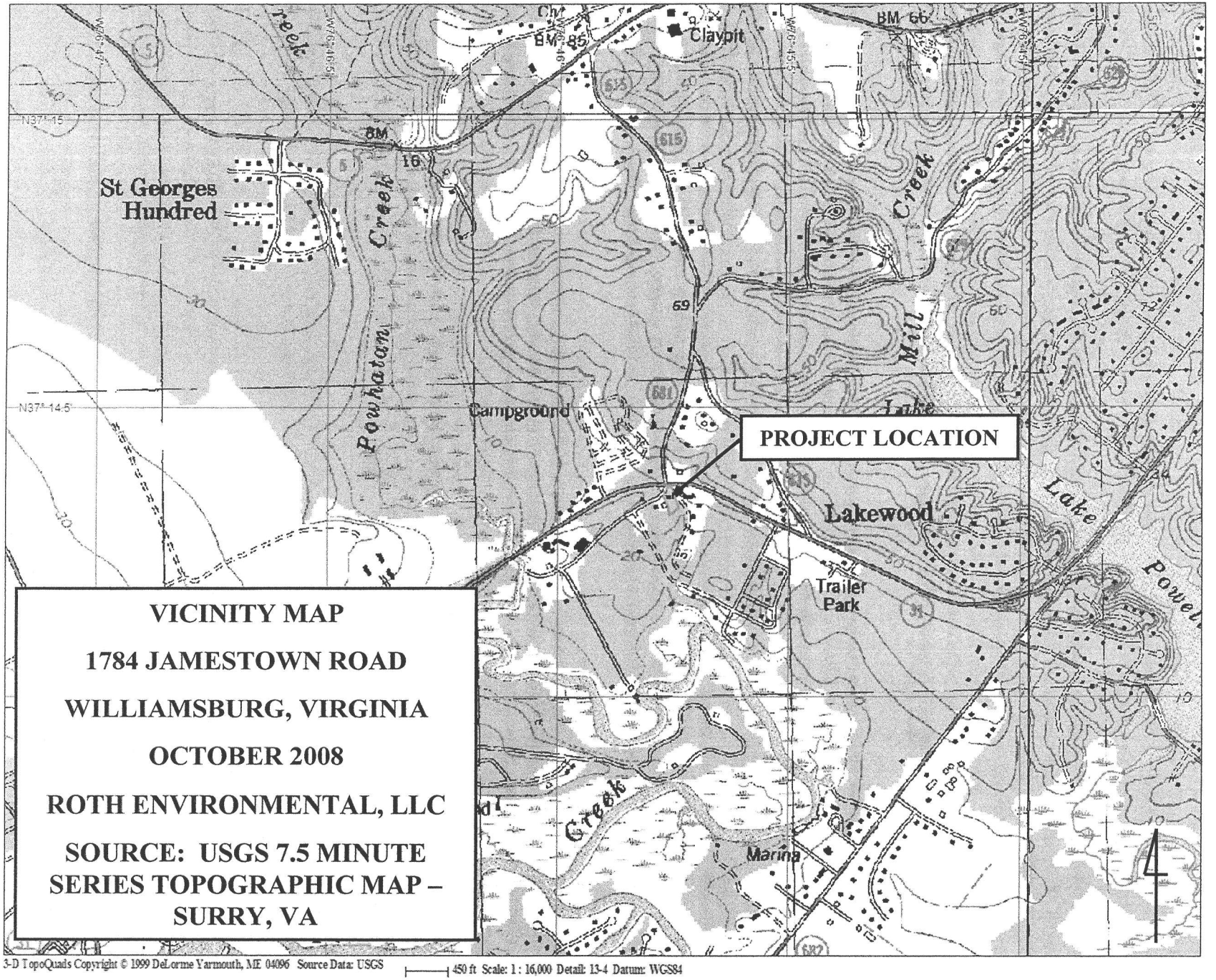

VICINITY MAP

1784 JAMESTOWN ROAD

WILLIAMSBURG, VIRGINIA

OCTOBER 2008

ROTH ENVIRONMENTAL, LLC

SOURCE: USGS 7.5 MINUTE SERIES TOPOGRAPHIC MAP – SURRY, VA

3-D TopoQuads Copyright © 1999 DeLorme Yarmouth, ME 04096 Source Data: USGS 450 ft Scale: 1 : 16,000 Detail: 13-4 Datum: WGS84

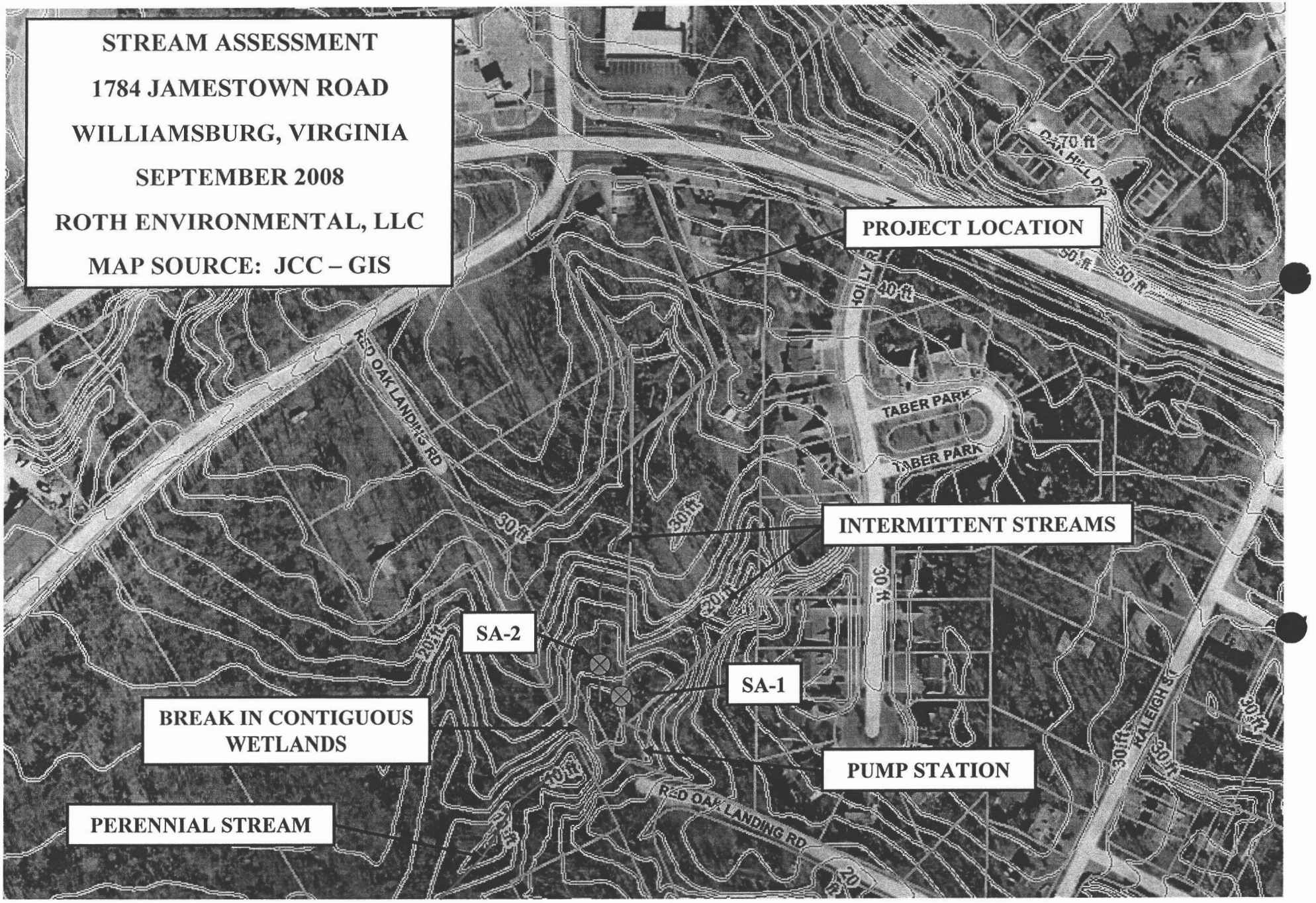
STREAM ASSESSMENT
1784 JAMESTOWN ROAD
WILLIAMSBURG, VIRGINIA
SEPTEMBER 2008
ROTH ENVIRONMENTAL, LLC
MAP SOURCE: JCC – GIS
PROJECT LOCATION
INTERMITTENT STREAMS
SA-2
SA-1
BREAK IN CONTIGUOUS WETLANDS
PUMP STATION
PERENNIAL STREAM
RED OAK LANDING RD
TABER PARK
TABER PARK
RALEIGH ST
70 ft
50 ft
40 ft
30 ft
20 ft
10 ft

NCDWQ Stream Classification Form

Project Name: 1784 JAMESTOWN ROAD River Basin: JAMES County: JAMES CITY Evaluator: ROTH Stream Area SA1

Nearest Named Stream: POWHATAN CREEK Date: SEPTEMBER 30, 2008 USGS QUAD: SURRY Signature: MAK

***PLEASE NOTE:** *If evaluator and landowner agree that the feature is a man-made ditch, then use of this form is not necessary. Also, if in the best professional judgement of the evaluator, the feature is a man-made ditch and not a modified natural stream—this rating system should not be used**

Primary Field Indicators: *(Circle One Number Per Line)*

I. Geomorphology	Absent	Weak	Moderate	Strong
1) Is There A Riffle-Pool Sequence?	0	1	2	3
2) Is The USDA Texture In Streambed Different From Surrounding Terrain?	0	1	2	3
3) Are Natural Levees Present?	0	1	2	3
4) Is The Channel Sinuous?	0	1	2	3
5) Is There An Active (Or Relic) Floodplain Present?	0	1	2	3
6) Is The Channel Braided?	0	1	2	3
7) Are Recent Alluvial Deposits Present?	0	1	2	3
8) Is There A Bankfull Bench Present?	0	1	2	3
9) Is A Continuous Bed & Bank Present? *(*NOTE: If Bed & Bank Caused By Ditching And WITHOUT Sinuosity Then Score=0*)*	0	1	2	3
10) Is A 2nd Order Or Greater Channel (As Indicated On Topo Map *And/Or* In Field) Present?	*Yes*=3		*No*=0	

PRIMARY GEOMORPHOLOGY INDICATOR POINTS: 9

II. Hydrology	Absent	Weak	Moderate	Strong
1) Is There A Groundwater Flow/Discharge Present?	0	1	2	3

PRIMARY HYDROLOGY INDICATOR POINTS: 1

III. Biology	Absent	Weak	Moderate	Strong
1) Are Fibrous Roots Present In Streambed?	3	2	1	0
2) Are Rooted Plants Present In Streambed?	3	2	1	0
3) Is Periphyton Present?	0	1	2	3
4) Are Bivalves Present?	0	1	2	3

PRIMARY BIOLOGY INDICATOR POINTS: 3

Secondary Field Indicators: *(Circle One Number Per Line)*

I. Geomorphology	Absent	Weak	Moderate	Strong
1) Is There A Head Cut Present In Channel?	0	.5	1	1.5
2) Is There A Grade Control Point In Channel?	0	.5	1	1.5
3) Does Topography Indicate A Natural Drainage Way?	0	.5	1	1.5

SECONDARY GEOMORPHOLOGY INDICATOR POINTS: 1.5

II. Hydrology	Absent	Weak	Moderate	Strong
1) Is This Year's (Or Last's) Leaflitter Present In Streambed?	1.5	1	.5	0
2) Is Sediment On Plants (Or Debris) Present?	0	.5	1	1.5
3) Are Wrack Lines Present?	0	.5	1	1.5
4) Is Water In Channel *And* >48 Hrs. Since Last *Known* Rain? *(*NOTE: If Ditch Indicated In #9 Above Skip This Step And #5 Below*)*	0	.5	1	1.5
5) Is There Water In Channel During Dry Conditions *Or* In Growing Season)?	0	.5	1	1.5
6) Are Hydric Soils Present In Sides Of Channel (Or In Headcut)?	*Yes*=1.5		*No*=0	

SECONDARY HYDROLOGY INDICATOR POINTS: 4.5

III. Biology	Absent	Weak	Moderate	Strong
1) Are Fish Present?	0	.5	1	1.5
2) Are Amphibians Present?	0	.5	1	1.5
3) Are AquaticTurtles Present?	0	.5	1	1.5
4) Are Crayfish Present?	0	.5	1	1.5
5) Are Macrobenthos Present?	0	.5	1	1.5
6) Are Iron Oxidizing Bacteria/Fungus Present?	0	.5	1	1.5
7) Is Filamentous Algae Present?	0	.5	1	1.5

8) Are Wetland Plants In Streambed? *(* NOTE: If Total Absence Of All Plants In Streambed As Noted Above Skip This Step UNLESS SAV Present*)*	SAV	Mostly OBL	Mostly FACW	Mostly FAC	Mostly FACU	Mostly UPL	None
	2	1	.75	.5	0	0	0

SECONDARY BIOLOGY INDICATOR POINTS: 1

***TOTAL POINTS** (Primary + Secondary)=* 20 *(If Greater Than Or Equal To 19 Points The Stream Is At Least Intermittent)*

NCDWQ Stream Classification Form

Project Name: 1784 JAMESTOWN ROAD River Basin: JAMES County: JAMES CITY Evaluator: ROTH Stream Area SA2

Nearest Named Stream: POWHATAN CREEK Date: SEPTEMBER 30, 2008 USGS QUAD: SURRY Signature: MAK

PLEASE NOTE:** ***If evaluator and landowner agree that the feature is a man-made ditch, then use of this form is not necessary. Also, if in the best professional judgement of the evaluator, the feature is a man-made ditch and not a modified natural stream—this rating system should not be used*

Primary Field Indicators: *(Circle One Number Per Line)*

I. Geomorphology	Absent	Weak	Moderate	Strong
1) Is There A Riffle-Pool Sequence?	0	1	2	3
2) Is The USDA Texture In Streambed Different From Surrounding Terrain?	0	1	2	3
3) Are Natural Levees Present?	0	1	2	3
4) Is The Channel Sinuous?	0	1	2	3
5) Is There An Active (Or Relic) Floodplain Present?	0	1	2	3
6) Is The Channel Braided?	0	1	2	3
7) Are Recent Alluvial Deposits Present?	0	1	2	3
8) Is There A Bankfull Bench Present?	0	1	2	3
9) Is A Continuous Bed & Bank Present? *(*NOTE: If Bed & Bank Caused By Ditching And WITHOUT Sinuosity Then Score=0*)*	0	1	2	3
10) Is A 2nd Order Or Greater Channel (As Indicated On Topo Map *And/Or* In Field) Present?	*Yes*=3		*No*=0	

PRIMARY GEOMORPHOLOGY INDICATOR POINTS: 8

II. Hydrology	Absent	Weak	Moderate	Strong
1) Is There A Groundwater Flow/Discharge Present?	0	1	2	3

PRIMARY HYDROLOGY INDICATOR POINTS: 1

III. Biology	Absent	Weak	Moderate	Strong
1) Are Fibrous Roots Present In Streambed?	3	2	1	0
2) Are Rooted Plants Present In Streambed?	3	2	1	0
3) Is Periphyton Present?	0	1	2	3
4) Are Bivalves Present?	0	1	2	3

PRIMARY BIOLOGY INDICATOR POINTS: 0

Secondary Field Indicators: *(Circle One Number Per Line)*

I. Geomorphology	Absent	Weak	Moderate	Strong
1) Is There A Head Cut Present In Channel?	0	.5	1	1.5
2) Is There A Grade Control Point In Channel?	0	.5	1	1.5
3) Does Topography Indicate A Natural Drainage Way?	0	.5	1	1.5

SECONDARY GEOMORPHOLOGY INDICATOR POINTS: 3

II. Hydrology	Absent	Weak	Moderate	Strong
1) Is This Year's (Or Last's) Leaflitter Present In Streambed?	1.5	1	.5	0
2) Is Sediment On Plants (Or Debris) Present?	0	.5	1	1.5
3) Are Wrack Lines Present?	0	.5	1	1.5
4) Is Water In Channel *And* >48 Hrs. Since Last *Known* Rain? *(*NOTE: If Ditch Indicated In #9 Above Skip This Step And #5 Below*)*	0	.5	1	1.5
5) Is There Water In Channel During Dry Conditions *Or* In Growing Season)?	0	.5	1	1.5
6) Are Hydric Soils Present In Sides Of Channel (Or In Headcut)?	*Yes=1.5*		*No*=0	

SECONDARY HYDROLOGY INDICATOR POINTS: 4

III. Biology	Absent	Weak	Moderate	Strong
1) Are Fish Present?	0	.5	1	1.5
2) Are Amphibians Present?	0	.5	1	1.5
3) Are AquaticTurtles Present?	0	.5	1	1.5
4) Are Crayfish Present?	0	.5	1	1.5
5) Are Macrobenthos Present?	0	.5	1	1.5
6) Are Iron Oxidizing Bacteria/Fungus Present?	0	.5	1	1.5
7) Is Filamentous Algae Present?	0	.5	1	1.5

8) Are Wetland Plants In Streambed? *(* NOTE: If Total Absence Of All Plants In Streambed As Noted Above Skip This Step UNLESS SAV Present*)*	SAV	Mostly OBL	Mostly FACW	Mostly FAC	Mostly FACU	Mostly UPL	None
	2	1	.75	.5	0	0	0

SECONDARY BIOLOGY INDICATOR POINTS: 1

TOTAL POINTS *(Primary + Secondary)*= 17 *(If Greater Than Or Equal To 19 Points The Stream Is At Least Intermittent)*

Photo: 1

Photograph Orientation – Northeast

This photograph shows the upstream area of SA-1. This stream reach began at the culvert and flows a short distance to connect with the main stream area. A stormwater management pond is located upstream of this area.

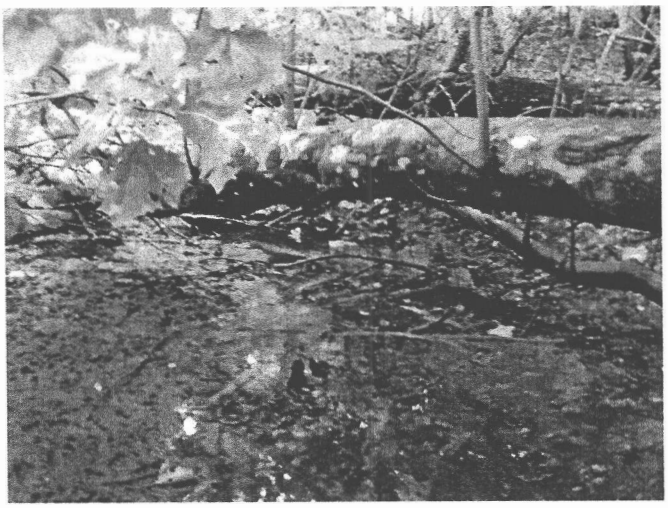

Photo: 2

Photograph Orientation – Southwest

This photograph shows a downstream view of SA-1.

Photo: 3

Photograph Orientation – North

This photograph shows the upstream area of SA-2. This stream has numerous areas in which lizard's tail has grown in the channel.

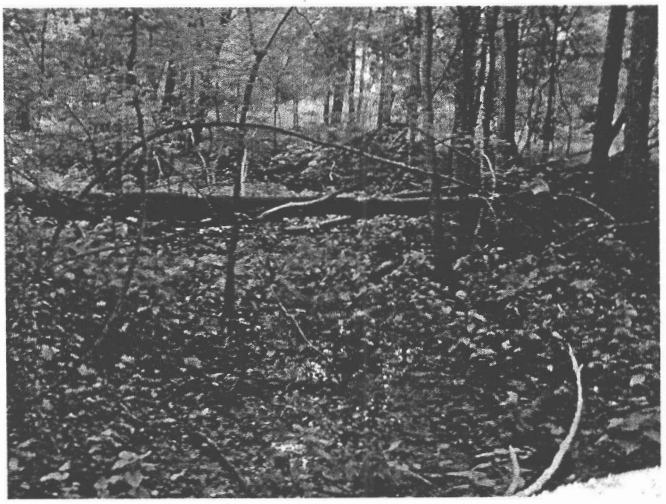

Photo: 4

Photograph Orientation – Northeast

This photograph shows the downstream area of SA-2.

Photo: 5

Photograph Orientation – South

This photograph shows the berm that disconnects the wetlands from downstream wetland areas.

Photo: 6

Photograph Orientation – West

This photograph shows the road and berm adjacent to the pump station on Red Oak Landing Road.

James City County Environmental Division
Stormwater Management / BMP Inspection Report
Detention and Retention Pond Facilities

County BMP ID Code (if known): PC-251

Name of Facility: Mediterranean Restaurant BMP BMP No.: 1 of 1 Date: 12/3/2010

Location: 1784 Jamestown Road Williamsburg, Va. 23188 (REAR OF property)

Name of Owner: Janice Ontaly

Name of Inspector: Gregory B. Johnson

Type of Facility: Detention Pond

Weather Conditions: Sunny/Warm Type: ☒ Final Inspection ☐ County BMP Inspection Program ☐ Owner Inspection

If an inspection item is not applicable, mark NA, otherwise mark the appropriate column.

O.K. - The item checked is in adequate condition and the maintenance program is currently satisfactory. No action required.
Routine - The item checked requires attention, but does not present an immediate threat to the function/integrity of the BMP.
Urgent - The item checked requires immediate attention to keep the BMP operational and to prevent damage to the facility.

Provide an explanation and details in the comment column, if routine or urgent are marked.

Facility Item	O.K.	Routine	Urgent	Comments
Embankments and Side Slopes:				
Grass Height	✓			
Vegetation Condition	✓			
Tree Growth	✓			
Erosion	✓			
Trash & Debris		✓		Moderate trash and debris
Seepage	✓			
Fencing or Benches	✓			
Interior Landscaping/Planted Areas: ☒ None ☐ Constructed Wetland/Shallow Marsh ☐ Naturally Established Vegetation				
Vegetated Conditions	✓			
Trash & Debris				
Floating Material				
Erosion		✓		Minor erosion occuring
Sediment	✓			
Dead Plant	✓			
Aesthetics	✓			
Other	✓			
Notes:				

Facility Item	O.K.	Routine	Urgent	Comments
Water Pools: ❒ Permanent Pool (Retention Basin) ❒ Shallow Marsh (Detention Basin) ❒ None, Dry (Detention Basin)				
Shoreline Erosion	✓			
Algae	✓			
Trash & Debris	✓			
Sediment	✓			
Aesthetics	✓			
Other	✓			
Inflows (Describe Types/Locations):				
Condition of Structure	✓			
Erosion		✓		
Trash and Debris	✓			
Sediment		✓		
Outlet Protection	✓			
Other	✓			
Principal Flow Control Structure - Riser, Intake, etc. (Describe Type):				
Condition of Structure	✓			
Corrosion	NA			
Trash and Debris	✓			
Sediment	✓			
Vegetation	✓			
Other	✓	✓		Erosion Right side of Structure
Principal Outlet Structure - Barrel, Conduit, etc. :				
Condition of Structure	✓			
Settlement	✓			
Trash & Debris	✓			
Erosion/Sediment	✓			
Outlet Protection	✓	✓		Rip rap needs modified/realigned
Other	✓			
Emergency Spillway (Overflow):				
Vegetation	✓			
Lining	✓			
Erosion	✓			
Trash & Debris	✓			
Other	✓			
Notes:				

Facility Item	O.K.	Routine	Urgent	Comments
Nuisance Type Conditions:				
Mosquito Breeding	✓			
Animal Burrows	✓			
Graffiti	✓			
Other	✓			
Surrounding Perimeter Conditions:				
Land Uses	✓			
Vegetation	✓			
Trash & Debris	✓			
Aesthetics	✓			
Access /Maintenance Roads or Paths	✓			
Other	✓			

Remarks:

Overall Environmental Division Internal Rating: ___ _____

Signature _____ **Date:** 12/3/2010

Title: Inspector

SWMProg\BMP\CoInspProg\InspForms\DetRet.wpd

REED'S ENTERPRISE, L.L.C.
GRADING & UTILITY

145 SAW MILL ROAD
WILLIAMSBURG, VA 23188-1382

757-259-9011 OR 757-592-3287
757-282-2468
DREED903@MSN.COM

Attention:
Greg Johnson

• Regarding the Meditteranean outfall structure

HOST STRUCTURE DIMENSIONS
PART NUMBER:
TYPE OF PIPE MOUNTING TO:
INSIDE DIAMTER OF PIPE:

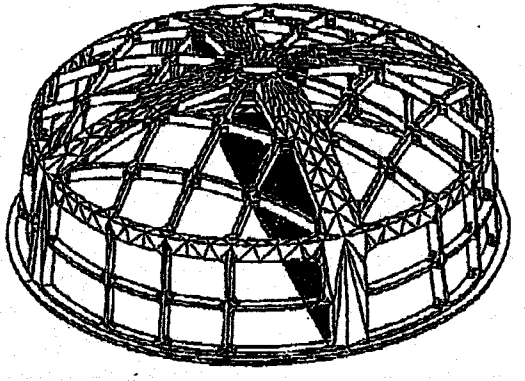

ISOMETRIC VIEW

*** Shown w/ 1/2" anti-vortex plate**

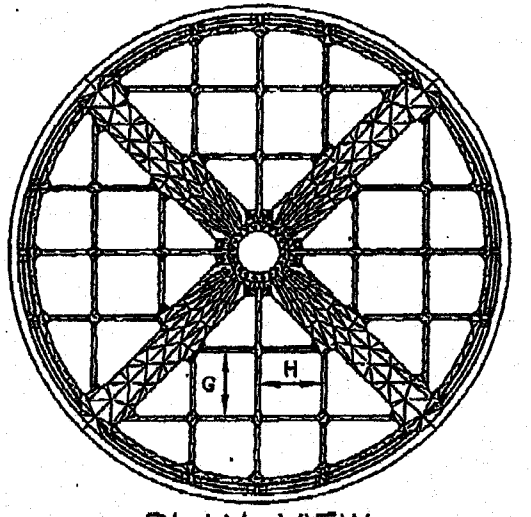

PLAN VIEW

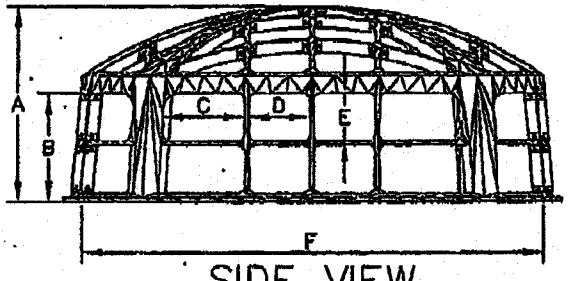

SIDE VIEW

ROUND SERIES TRASH RACKS

RISER	A	B	C	D	E	F	G	H
RS-24 (12"ø-18"ø)	17 1/3"	13 1/3"	7 3/4"	6 1/4"	6 1/4"	27 1/2"	6 1/4"	7 1/2"
RS-36 (21"ø-30"ø)	21 1/8"	13 1/2"	6 1/4"	6 1/4"	6 1/4"	40 1/2"	6 1/4"	7 1/2"
* RS-48 (33"ø-42"ø)	27 3/4"	17 3/4"	7"	8 1/2"	6 3/4"	54 1/4"	8 1/2"	9"
RS-60 (48"ø-54"ø)	27 3/4"	17 3/4"	11 1/2"	8 1/2"	6 3/4"	67 1/2"	8 1/2"	9"

PLASTIC SOLUTIONS, INC.
P.O. BOX 4386
WINCHESTER, VA 22604
877-877-5727 540-722-2219 fax)
www.plasticsolution.com

CUSTOMER:	DATE:
	DRAWN BY:
PROJECT:	APP'D BY:
	DETAIL:

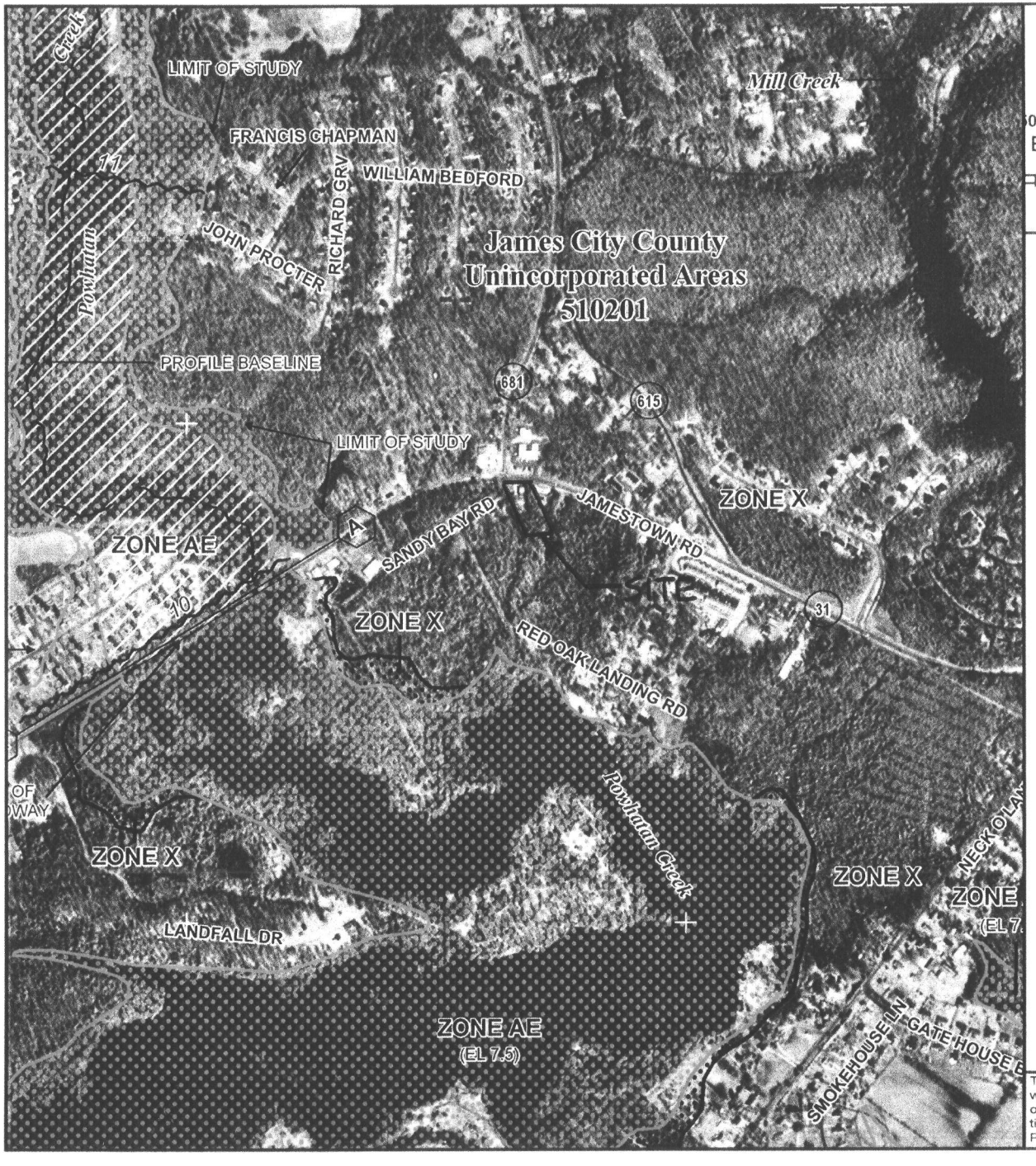

MAP SCALE 1" = 1000'

500 0 1000 2000 FEET

METERS

NFIP

NATIONAL FLOOD INSURANCE PROGRAM

PANEL 0185C

FIRM

FLOOD INSURANCE RATE MAP

JAMES CITY COUNTY, VIRGINIA

AND INCORPORATED AREAS

PANEL 185 OF 240

(SEE MAP INDEX FOR FIRM PANEL LAYOUT)

CONTAINS

COMMUNITY	NUMBER	PANEL	SUFFIX
JAMES CITY COUNTY	510201	0185	C

Notice to User: The **Map Number** shown below should be used when placing map orders; the **Community Number** shown above should be used on insurance applications for the subject community.

MAP NUMBER
51095C0185C

EFFECTIVE DATE
SEPTEMBER 28, 2007

Federal Emergency Management Agency

This is an official copy of a portion of the above referenced flood map. It was extracted using F-MIT On-Line. This map does not reflect changes or amendments which may have been made subsequent to the date on the title block. For the latest product information about National Flood Insurance Program flood maps check the FEMA Flood Map Store at www.msc.fema.gov