CERTIFICATE OF AUTHENTICITY

THIS IS TO CERTIFY THAT THE FOLLOWING ELECTRONIC RECORDS ARE TRUE AND ACCURATE REPRODUCTIONS OF THE ORIGINAL RECORDS OF JAMES CITY COUNTY GENERAL SERVICES DEPARTMENT- STORMWATER DIVISION; WERE SCANNED IN THE REGULAR COURSE OF BUSINESS PURSUANT TO GUIDELINES ESTABLISHED BY THE LIBRARY OF VIRGINIA AND ARCHIVES; AND HAVE BEEN VERIFIED IN THE CUSTODY OF THE INDIVIDUAL LISTED BELOW.

BMP NUMBER: **WC005**

DATE VERIFIED: **September 18, 2012**

QUALITY ASSURANCE TECHNICIAN: **Leah Hardenbergh**

Leah Hardenbergh

LOCATION: WILLIAMSBURG, VIRGINIA

Stormwater Division

MEMORANDUM

DATE: March 12, 2010

TO: Michael J. Gillis, Virginia Correctional Enterprises Document Management Services

FROM: Jo Anna Ripley, Stormwater

PO: 270712

RE: Files Approved for Scanning

General File ID or BMP ID: WC005

PIN: 1340100010

Subdivision, Tract, Business or Owner Name (if known): MHC Williamsburg LLC

Property Description: Campground

Site Address: 4301 Rochambeau Drive

(For internal use only) **Box** 20 **Drawer:** 8

Agreements: (in file as of scan date) **N** **Book or Doc#:** **Page:**

Comments

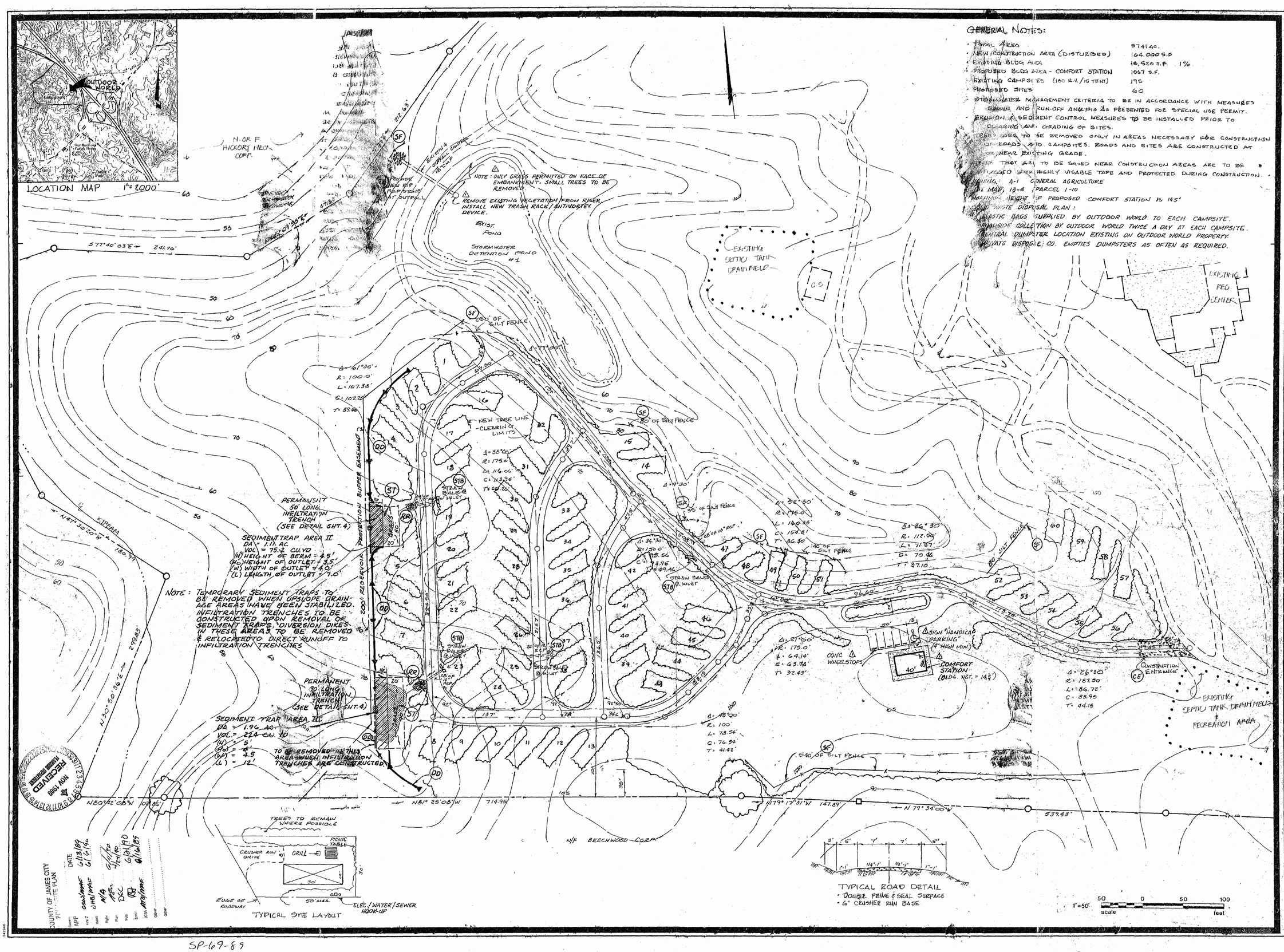

GENERAL NOTES:

• TOTAL AREA	57.41 AC.
• NEW CONSTRUCTION AREA (DISTURBED)	164,000 S.F
• EXISTING BLDG AREA	18,520 S.F. 1%
• PROPOSED BLDG AREA - COMFORT STATION	1067 S.F.
• EXISTING CAMPSITES (180 R.V./15 TENT)	195
• PROPOSED SITES	60

• STORMWATER MANAGEMENT CRITERIA TO BE IN ACCORDANCE WITH MEASURES SHOWN AND RUN-OFF ANALYSIS AS PRESENTED FOR SPECIAL USE PERMIT.
• EROSION & SEDIMENT CONTROL MEASURES TO BE INSTALLED PRIOR TO CLEARING AND GRADING OF SITES.
• TREES ARE TO BE REMOVED ONLY IN AREAS NECESSARY FOR CONSTRUCTION OF ROADS AND CAMPSITES. ROADS AND SITES ARE CONSTRUCTED AT OR NEAR EXISTING GRADE.
• TREES THAT ARE TO BE SAVED NEAR CONSTRUCTION AREAS ARE TO BE FLAGGED WITH HIGHLY VISABLE TAPE AND PROTECTED DURING CONSTRUCTION.
• ZONING: A-1 GENERAL AGRICULTURE
• TAX MAP: 13-4 PARCEL 1-10
• MAXIMUM HEIGHT OF PROPOSED COMFORT STATION IS 14.5'
• SOLID WASTE DISPOSAL PLAN:
PLASTIC BAGS SUPPLIED BY OUTDOOR WORLD TO EACH CAMPSITE.
ROADSIDE COLLECTION BY OUTDOOR WORLD TWICE A DAY AT EACH CAMPSITE.
CENTRAL DUMPSTER LOCATION EXISTING ON OUTDOOR WORLD PROPERTY.
PRIVATE DISPOSAL CO. EMPTIES DUMPSTERS AS OFTEN AS REQUIRED.

SITE PLAN

OUTDOOR WORLD CORPORATION
WILLIAMSBURG RESORT
JAMES CITY COUNTY, VIRGINIA

△ REVISED 9/29/89

THE DEYOUNG-JOHNSON GROUP, INC
ENGINEERS ARCHITECTS SURVEYORS
P.O. BOX 197 WILLIAMSBURG, VIRGINIA 23187 (804) 253-0673

DATE	DESIGNED	DRAWN	CHECKED
JUNE 6, 1989	LDE		

1890290

1

COUNTY OF JAMES CITY
FINAL SITE PLAN

Round	DATE
APP	6/13/89
Eng C	6/6/90
Health	
Highway	6/11/90
Plan	7/27/90
Pub.	6/21/90
Bldg.	6/26/89
JCSA	
COMM	
COMM	

RECEIVED NOV 1989

SP-69-89

WC005_OUTDOOR_WORLD - 003

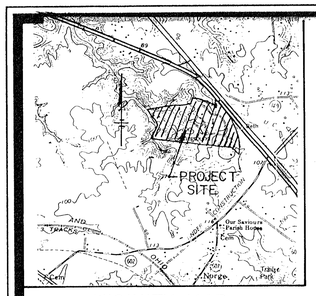

VICINITY MAP

SCALE: 1" = 2000'

GENERAL NOTES

1. PUMP STATION SHALL MEET JCSA AND STATE HEALTH DEPARTMENT REGULATIONS.
2. CONTRACTOR SHALL BE RESPONSIBLE FOR LOCATING AND PROTECTING ALL EXISTING UTILITIES AND SHALL REPAIR ANY THAT MAYBE DAMAGED OR RELOCATED AT HIS OWN EXPENSE AND SHALL RESOLVE ANY CONFLICTS WITH EXISTING UTILITIES.
3. CONTRACTOR SHALL OBTAIN AT HIS OWN EXPENSE ANY PERMITS OR BONDS IF REQUIRED BY ANY GOVERNMENT AGENCY AND JCSA AVAILIBILITY FEES.
4. BEFORE DIGGING CALL "MISS UTILITIES" OF VIRGINIA, 1-800-552-7001
5. PROVIDE THRUST BLOCKS AT ALL BENDS ON FORCEMAIN.

SPECIFICATIONS

1. GRINDER PUMP STATION-ENVIRONMENT ONE MODEL GP 214, DUPLEX PUMP STATION. UNIT SHALL CONSIST OF TWO IDENTICAL PUMPS IN A 120GALLON FIBERGLASS REINFORCED POLYESTER (FRP) TANK WITH ALL NECESSARY CONTROLS BUILT INTO THE UNIT AND READY FOR CONNECTION. GRINDER PUMPS SHALL HAVE A PUMP CAPACITY OF 13.5 GPM @ 42.37' TDH.

~~2. GRINDER PUMP NO.4-ENVIRONMENT ONE MODEL GP210, SIMPLEX PUMP STATION WITH PUMP CAPACITY OF 14.5 @ 7.65.~~

3. PIPE: LOW PRESSURE PIPE SHALL BE PVC, SCH40.
4. FITTINGS - SOCKET TYPE, SCH40, ASTM 2466.
5. LEAKAGE TEST: USE HYDROSTATIC LEAKAGE TEST TO TEST EACH NEWLY LAID PRESSURE PIPE, INCLUDING ANY VALVED SETIONS THEREOF, AT 1.5 TIMES THE WORKING PRESSURE OF THE PIPELINE BASED ON THE ELEVATION OF THE LOWEST POINT ON THE PIPELINE CORRECTED TO THE ELEVATION OF THE GAUGE. OBTAIN PRESSURE FROM ENGINEER.
6. ELECTRICAL TESTING: TEST: PUMPING STATION WITH CLEAN WATER THROUGH MINIMUM OF TWO COMPLETE CYCLES INCLUDING HIGH WATER LEVEL AND LOW WATER LEVEL CONDITIONS TO DEMENSTRATE CORRECT SEQUENCE OF OPERATION, PUMP CONTROL SETTINGS, ALARM SETTINGS, FREEDOM FROM PUMP VIBRATION, NOISE, AND OVERHEATING.
7. EQUIPMENT SUPPLIER IS RESPONSIBLE FOR REPLACING ALL DEFECTIVE PARTS, MOTORS, PUMPS, CONTROLS AND INCLUDE ALL LABOR NECESSARY TO ACCOMPLISH REPLACEMENT, FOR A PERIOD OF ONE YEAR.

GRINDER PUMP DETAIL

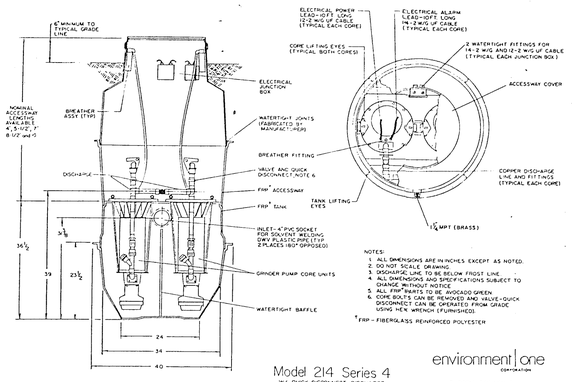

NOTES:
1. ALL DIMENSIONS ARE IN INCHES EXCEPT AS NOTED.
2. DO NOT SCALE DRAWING.
3. DISCHARGE LINE TO BELOW FROST LINE.
4. ALL DIMENSIONS AND SPECIFICATIONS SUBJECT TO CHANGE WITHOUT NOTICE.
5. ALL FRP* PARTS TO BE AVOCADO GREEN.
6. CORE BOLTS CAN BE REMOVED AND VALVE-QUICK DISCONNECT CAN BE OPERATED FROM GRADE USING HEX WRENCH (FURNISHED).

*FRP - FIBERGLASS REINFORCED POLYESTER

Model 214 Series 4
W/ QUICK DISCONNECT DISCHARGE

environment | one CORPORATION

8-2021B 246 REV A

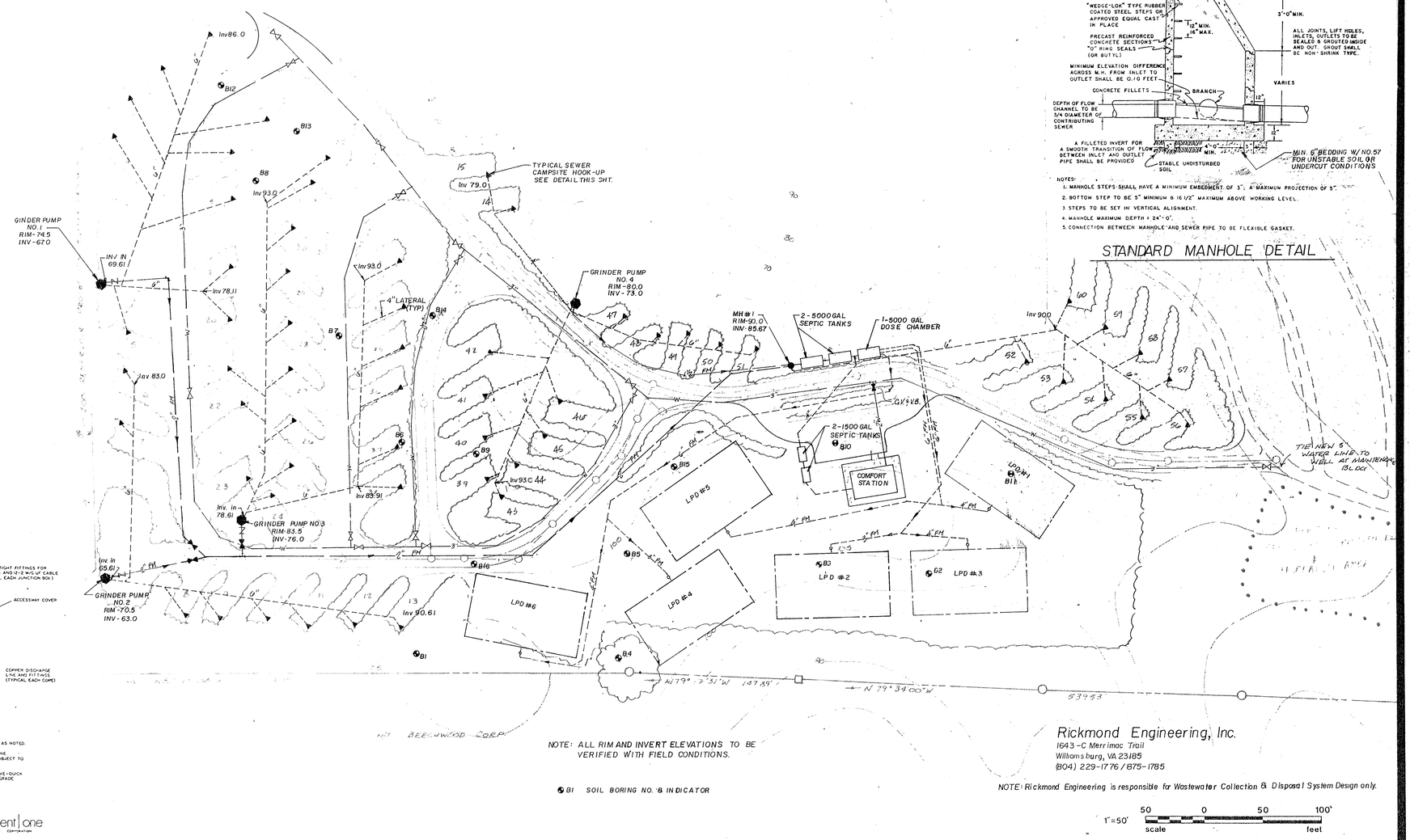

NOTE: ALL RIM AND INVERT ELEVATIONS TO BE VERIFIED WITH FIELD CONDITIONS.

B1 SOIL BORING NO. & INDICATOR

UTILITY NOTES:

- WATER AND SEWER LINES TO MAINTAIN A MINIMUM OF 36" OF COVER
- WATER AND SEWER FACILITIES TO BE MAINTAINED BY OWNER
- GRINDER PUMPS AND DRAINFIELDS TO BE INSTALLED AFTER APPROVAL RECIEVED FROM VIRGINIA HEALTH DEPARTMENT
- WATER AND SEWER LINES TO BE PVC
- ALL UTILITIES ARE TO BE UNDERGROUND

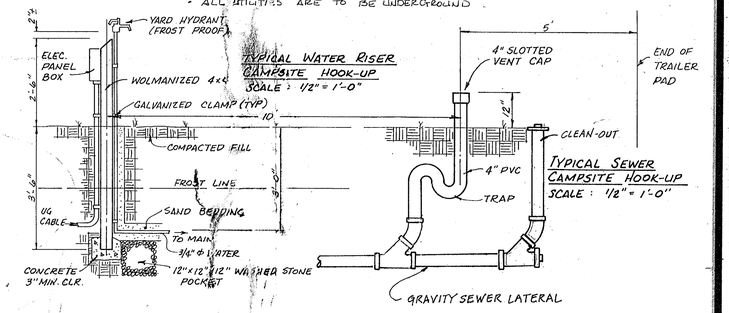

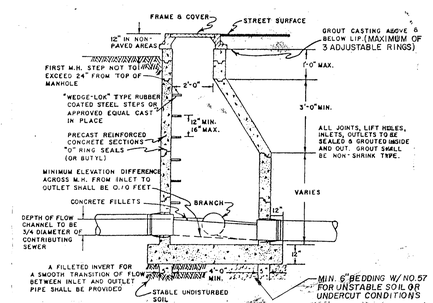

NOTES:
1. MANHOLE STEPS SHALL HAVE A MINIMUM EMBEDMENT OF 3", A MAXIMUM PROJECTION OF 5".
2. BOTTOM STEP TO BE 5" MINIMUM & 16 1/2" MAXIMUM ABOVE WORKING LEVEL.
3. STEPS TO BE SET IN VERTICAL ALIGNMENT.
4. MANHOLE MAXIMUM DEPTH = 24'-0".
5. CONNECTION BETWEEN MANHOLE AND SEWER PIPE TO BE FLEXIBLE GASKET.

STANDARD MANHOLE DETAIL

Rickmond Engineering, Inc.
1643-C Merrimac Trail
Williamsburg, VA 23185
(804) 229-1776 / 875-1785

NOTE: Rickmond Engineering is responsible for Wastewater Collection & Disposal System Design only.

1"=50' 50 0 50 100' scale feet

WASTEWATER COLLECTION & DISPOSAL SYSTEM

OUTDOOR WORLD CORPORATION

WILLIAMSBURG RESORT
JAMES CITY COUNTY, VIRGINIA

COMMONWEALTH OF VIRGINIA — D. C. RICKMOND, JR. — No. 9648 — PROFESSIONAL ENGINEER

THE DEYOUNG-JOHNSON GROUP, INC.
ENGINEERS · ARCHITECTS · SURVEYORS
P.O. BOX 197 WILLIAMSBURG, VIRGINIA 23187 (804) 253-0673

DATE	DESIGNED	DRAWN	CHECKED
JUNE 6, 1989			

1890290

2

WC005_OUTDOOR_WORLD - 004

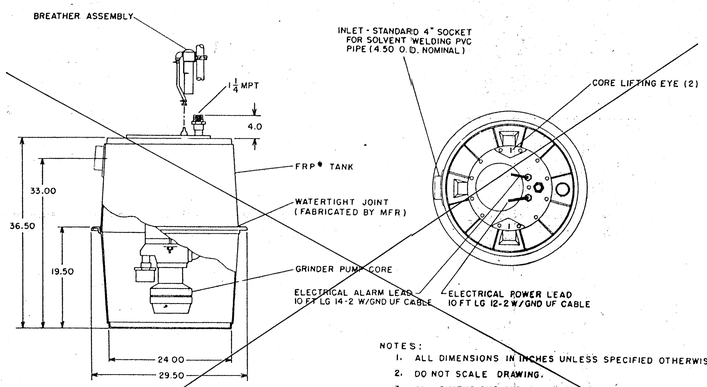

FRP - FIBERGLASS REINFORCED POLYESTER

NOTES:
1. ALL DIMENSIONS IN INCHES UNLESS SPECIFIED OTHERWISE.
2. DO NOT SCALE DRAWING.
3. ALL DIMENSIONS AND SPECIFICATIONS SUBJECT TO CHANGE WITHOUT NOTICE.
4. ALL FRP* PARTS TO BE AVOCADO GREEN.
5. FACTORY ASSEMBLED AND TESTED.

environment | one CORPORATION

MODEL 210 SERIES 1

B-2021B-227 REV C 1-85

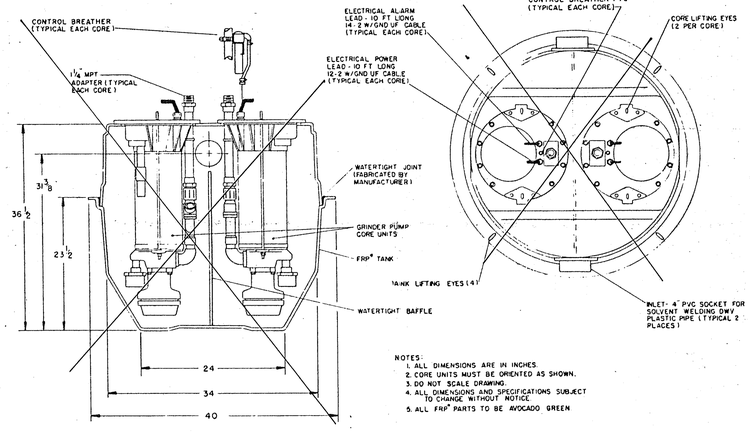

*FRP - FIBERGLASS REINFORCED POLYESTER

NOTES:
1. ALL DIMENSIONS ARE IN INCHES.
2. CORE UNITS MUST BE ORIENTED AS SHOWN.
3. DO NOT SCALE DRAWING.
4. ALL DIMENSIONS AND SPECIFICATIONS SUBJECT TO CHANGE WITHOUT NOTICE.
5. ALL FRP* PARTS TO BE AVOCADO GREEN

environment | one CORPORATION

MODEL 214 SERIES 1

B-2021B-205 REV B 12-84

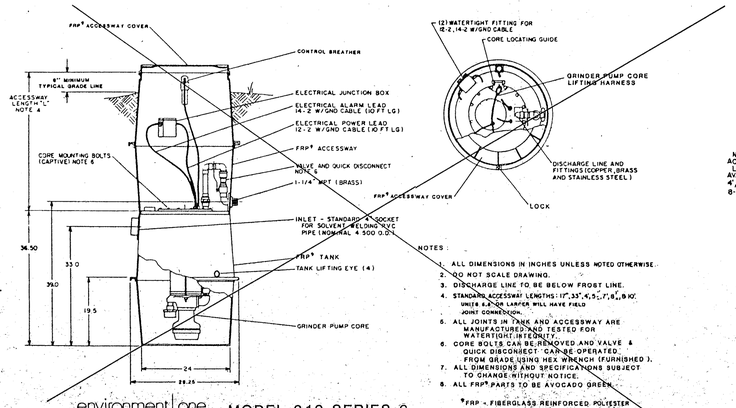

NOTES:
1. ALL DIMENSIONS IN INCHES UNLESS NOTED OTHERWISE.
2. DO NOT SCALE DRAWING.
3. DISCHARGE LINE TO BE BELOW FROST LINE.
4. STANDARD ACCESSWAY LENGTHS: 11", 35", 4.5', 7', 8', 9' 10'. UNITS 6.5' OR LARGER WILL HAVE FIELD JOINT CONNECTION.
5. ALL JOINTS IN TANK AND ACCESSWAY ARE MANUFACTURED AND TESTED FOR WATERTIGHT INTEGRITY.
6. CORE BOLTS CAN BE REMOVED AND VALVE & QUICK DISCONNECT CAN BE OPERATED FROM GRADE USING HEX WRENCH (FURNISHED).
7. ALL DIMENSIONS AND SPECIFICATIONS SUBJECT TO CHANGE WITHOUT NOTICE.
8. ALL FRP* PARTS TO BE AVOCADO GREEN.

*FRP - FIBERGLASS REINFORCED POLYESTER

environment | one CORPORATION

MODEL 210 SERIES 6

B-2021B-222 REV G

NOTE: 210 SERIES NOT APPLICABLE

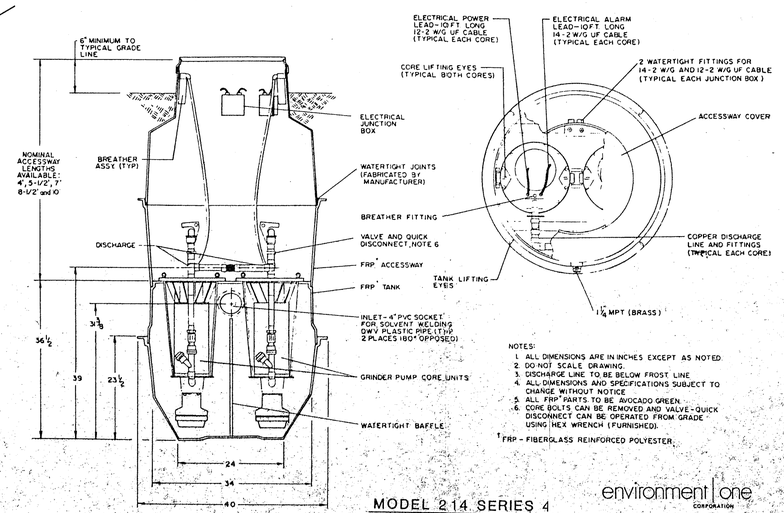

NOTES:
1. ALL DIMENSIONS ARE IN INCHES EXCEPT AS NOTED.
2. DO NOT SCALE DRAWING.
3. DISCHARGE LINE TO BE BELOW FROST LINE
4. ALL DIMENSIONS AND SPECIFICATIONS SUBJECT TO CHANGE WITHOUT NOTICE
5. ALL FRP* PARTS TO BE AVOCADO GREEN.
6. CORE BOLTS CAN BE REMOVED AND VALVE-QUICK DISCONNECT CAN BE OPERATED FROM GRADE USING HEX WRENCH (FURNISHED).

*FRP - FIBERGLASS REINFORCED POLYESTER.

MODEL 214 SERIES 4

W/ QUICK DISCONNECT DISCHARGE

environment | one CORPORATION

B-2021B-246 REV B

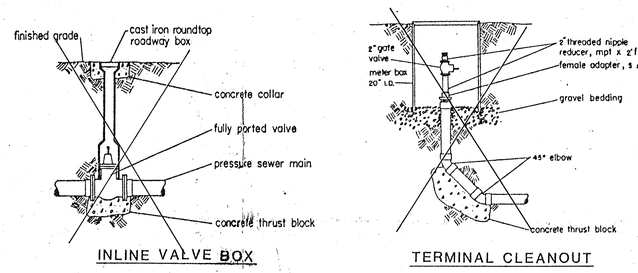

INLINE VALVE BOX

TERMINAL CLEANOUT

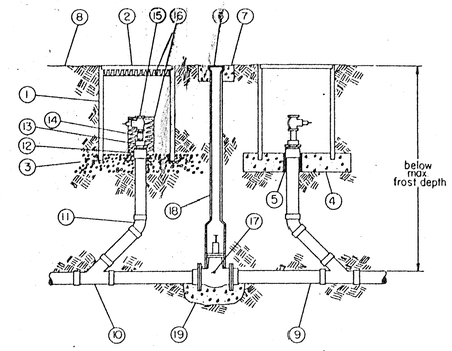

INLINE CLEANOUT AND VALVE

KEY TO FIGURE NO. 2

1. **Manway**
   concrete, steel or aluminum corrugated pipe, bituminous fiber or fiberglass
2. **Cover**
   concrete, steel, etc., weatherproof, vandalproof
3. **Gravel Bedding**
   for Manway support and leaching of surface water (depth 8-12")
4. **Concrete**
   if installed in a traffic area, a concrete pad should be used in place of gravel bedding
5. **Gravel or Expansion Material**
   placed around pipe
6. **Cast Iron, Round Top Roadway Box**
7. **Concrete Collar**
8. **Finished Grade**
9. **Pressure Sewer Main**
10. **45° Wye or Tapping Saddle**
11. **45° Elbow**
12. **Female Adapter Slip x Thread**
13. **Reducer, MPT x 2" FPT**
    reducer may be removed to insert cleaning equipment if necessary
14. **2" Nipple**
15. **2" Gate Valve**
    wrench operated
16. **Insulation**
    may be required in severe climates
17. **Gate Valve**
    fully ported, size of pressure sewer main
18. **Plastic Round Top Valve Box**
    length as required
19. **Concrete Thrust Block**

INLINE CLEANOUT AND VALVE

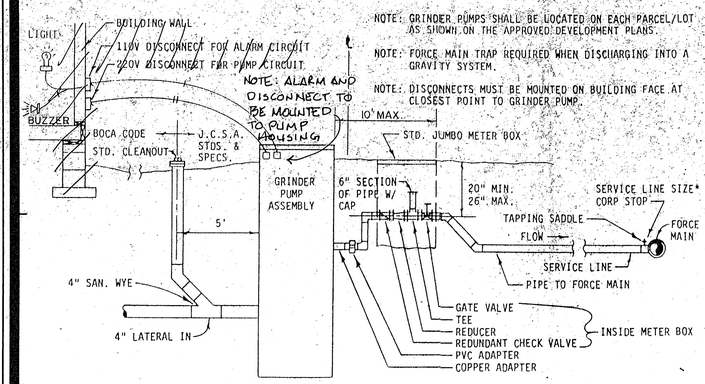

NOTE: GRINDER PUMPS SHALL BE LOCATED ON EACH PARCEL/LOT AS SHOWN ON THE APPROVED DEVELOPMENT PLANS.

NOTE: FORCE MAIN TRAP REQUIRED WHEN DISCHARGING INTO A GRAVITY SYSTEM.

NOTE: DISCONNECTS MUST BE MOUNTED ON BUILDING FACE AT CLOSEST POINT TO GRINDER PUMP.

NOTE: GRINDER PUMP ASSEMBLIES SHALL BE ENVIRONMENT/ONE CORPORATION MODEL FARRELL 210 (SIMPLEX).

*SADDLES MAY BE USED FOR CONNECTIONS TO GRAVITY SEWER.

TYPICAL GRINDER PUMP INSTALLATION

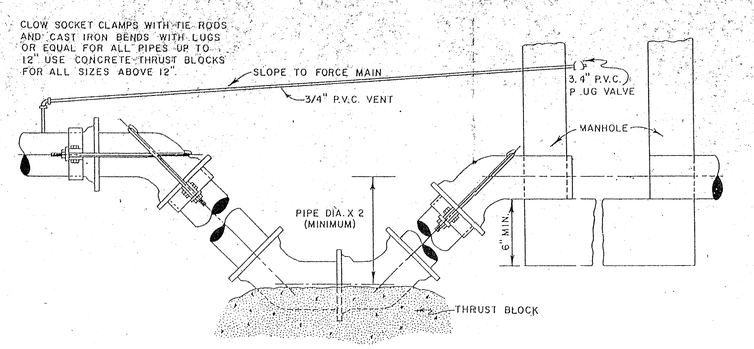

FORCE MAIN TRAP DETAILS

GRINDER PUMP DETAIL

OUTDOOR WORLD CORPORATION
WILLIAMSBURG RESORT
JAMES CITY COUNTY, VIRGINIA

THE DEYOUNG-JOHNSON GROUP INC.
ENGINEERS ARCHITECTS SURVEYORS
P.O. BOX 197 WILLIAMSBURG, VIRGINIA 23187 (804) 253-0673

DATE JUNE 6, 1989 | DESIGNED LDC | DRAWN | CHECKED

1890290

3

1.01	TEMPORARY GRAVEL CONSTRUCTION ENTRANCE	CE

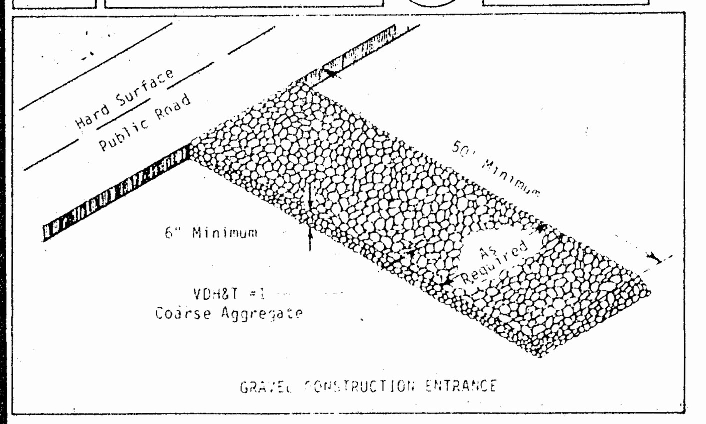

GRAVEL CONSTRUCTION ENTRANCE

Design Criteria

Aggregate Size

VDH&T aggregate No.1 (2-3-inch stone) should be used.

Entrance Dimensions

The aggregate layer must be at least 6 inches thick. It must extend the full width of the vehicular ingress and egress area. The length of the entrance must be at least 50 feet. (See Plate 1.01a).

Washing

If conditions on the site are such that the majority of the mud is not removed by the vehicles traveling over the gravel, then the tires of the vehicles must be washed before entering a public road. Wash water must be carried away from the entrance to a settling area to remove sediment. A wash rack may also be used to make washing more convenient and effective. (See Plate 1.01b).

Location

The entrance should be located to provide for maximum utility by all construction vehicles.

Construction Specifications

The area of the entrance should be cleared of all vegetation, roots, and other objectionable material. The gravel shall be placed to the specified dimensions. Any drainage facilities required because of washing should be constructed according to specifications. If wash racks are used, they should be installed according to manufacturer's specifications.

Maintenance

The entrance shall be maintained in a condition which will prevent tracking or flow of mud onto public rights-of-way. This may require periodic top dressing with 2-inch stone, as conditions demand, and repair and/or cleanout of any structures used to trap sediment. All materials spilled, dropped, washed, or tracked from vehicles onto roadways or into storm drains must be removed immediately.

1.02	CONSTRUCTION ROAD STABILIZATION	CRS

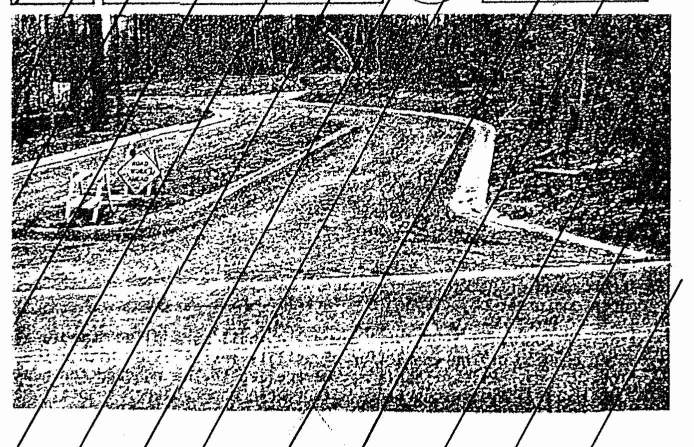

VOID

Permanent Roads and Parking Areas

Vegetation

Maintenance

1.05	STRAW BALE BARRIER	STB

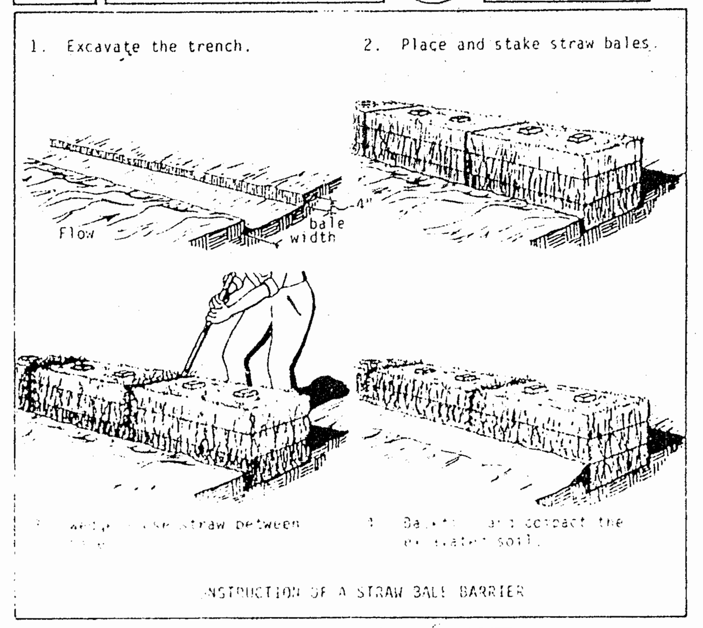

CONSTRUCTION OF A STRAW BALE BARRIER

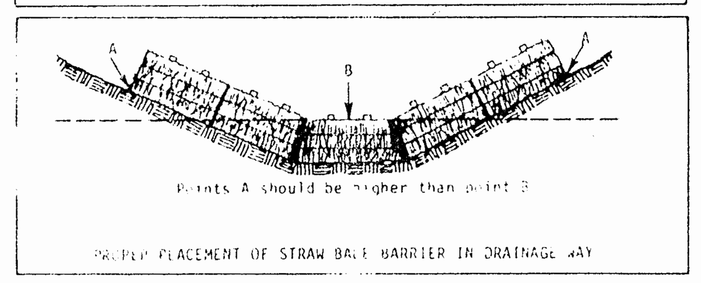

PROPER PLACEMENT OF STRAW BALE BARRIER IN DRAINAGE WAY

Maintenance

1. Straw bale barriers shall be inspected immediately after each rainfall and at least daily during prolonged rainfall.
2. Close attention shall be paid to the repair of damaged bales, end runs and undercutting beneath bales.
3. Necessary repairs to barriers or replacement of bales shall be accomplished promptly.
4. Sediment deposits should be removed after each rainfall. They must be removed when the level of deposition reaches approximately one-half the height of the barrier.
5. Any sediment deposits remaining in place after the straw bale barrier is no longer required shall be dressed to conform to the existing grade, prepared and seeded.

1.06	SILT FENCE	SF

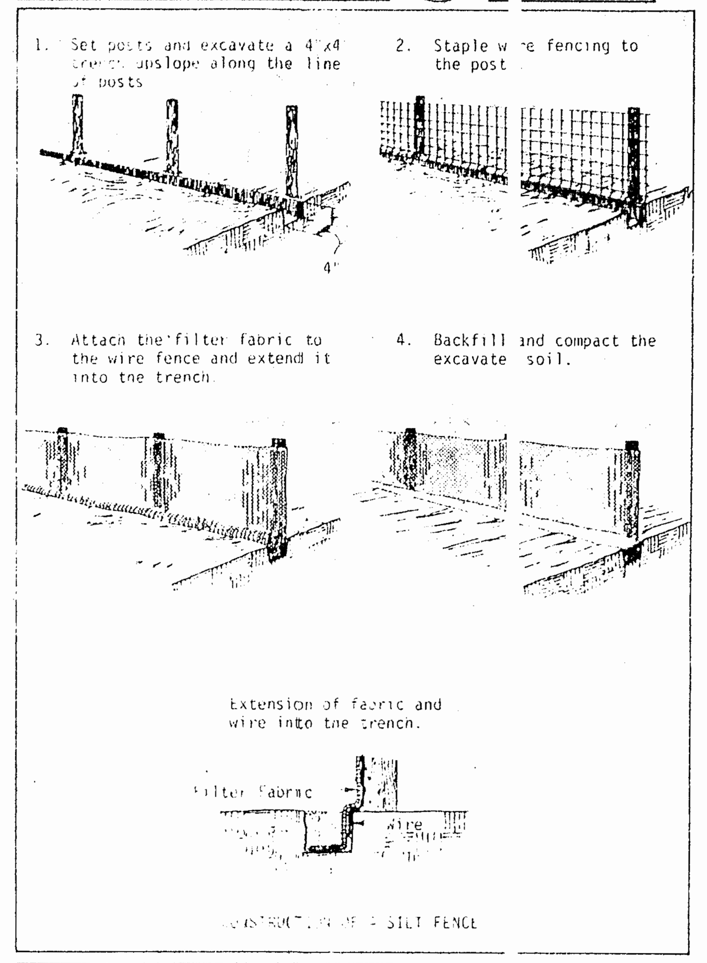

CONSTRUCTION OF A SILT FENCE

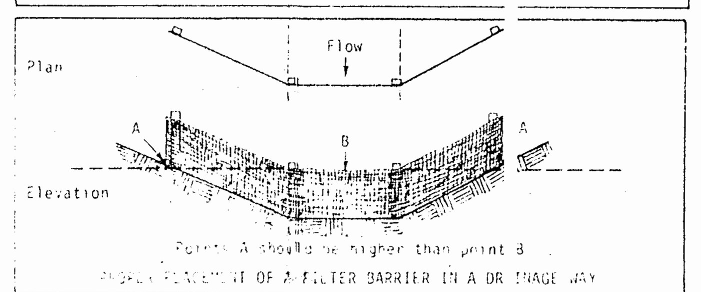

PROPER PLACEMENT OF A FILTER BARRIER IN A DRAINAGE WAY

Maintenance

1. Silt fences and filter barriers shall be inspected immediately after each rainfall and at least daily during prolonged rainfall. Any required repairs shall be made immediately.
2. Should the fabric on a silt fence or filter barrier decompose or become ineffective prior to the end of the expected usable life and the barrier still be necessary, the fabric shall be replaced promptly.
3. Sediment deposits should be removed after each storm event. They must be removed when deposits reach approximately one-half the height of the barrier.
4. Any sediment deposits remaining in place after the silt fence or filter barrier is no longer required shall be dressed to conform with the existing grade, prepared and seeded.

1.08	STORM DRAIN INLET PROTECTION	IP

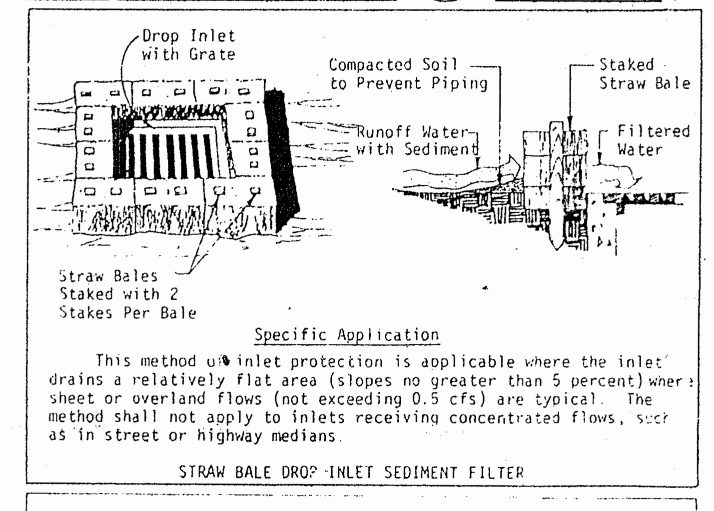

Specific Application

This method of inlet protection is applicable where the inlet drains a relatively flat area (slopes no greater than 5 percent) where sheet or overland flows (not exceeding 0.5 cfs) are typical. The method shall not apply to inlets receiving concentrated flows, such as in street or highway medians.

STRAW BALE DROP INLET SEDIMENT FILTER

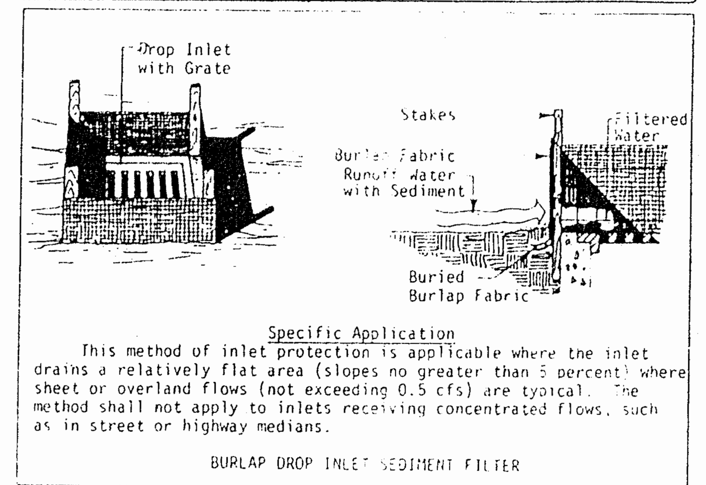

Specific Application

This method of inlet protection is applicable where the inlet drains a relatively flat area (slopes no greater than 5 percent) where sheet or overland flows (not exceeding 0.5 cfs) are typical. The method shall not apply to inlets receiving concentrated flows, such as in street or highway medians.

BURLAP DROP INLET SEDIMENT FILTER

Maintenance

1. The structure shall be inspected after each rain and repairs made as needed.
2. Sediment shall be removed and the trap restored to its original dimensions when the sediment has accumulated to 1/2 the design depth of the trap. Removed sediment shall be deposited in a suitable area and in such a manner that it will not erode.
3. Structures shall be removed and the area stabilized when the remaining drainage area has been properly stabilized.

1.15	TEMPORARY DIVERSION DIKE	DD

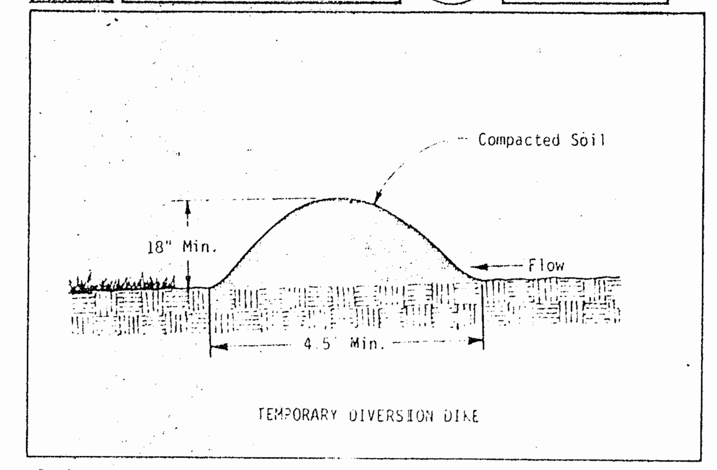

TEMPORARY DIVERSION DIKE

Outlet

1. The diverted runoff, if free of sediment, must be released through a stabilized outlet or channel.
2. Sediment-laden runoff must be diverted and released through a sediment trapping facility.

Construction Specifications

1. Whenever feasible, the dike should be built before construction begins on the project.
2. The dike should be adequately compacted to prevent failure.
3. Temporary or permanent seeding and mulch shall be applied to the dike within 15 days of construction.
4. The dike should be located to minimize damages by construction operations and traffic.

1.25	TEMPORARY SEDIMENT TRAP	ST

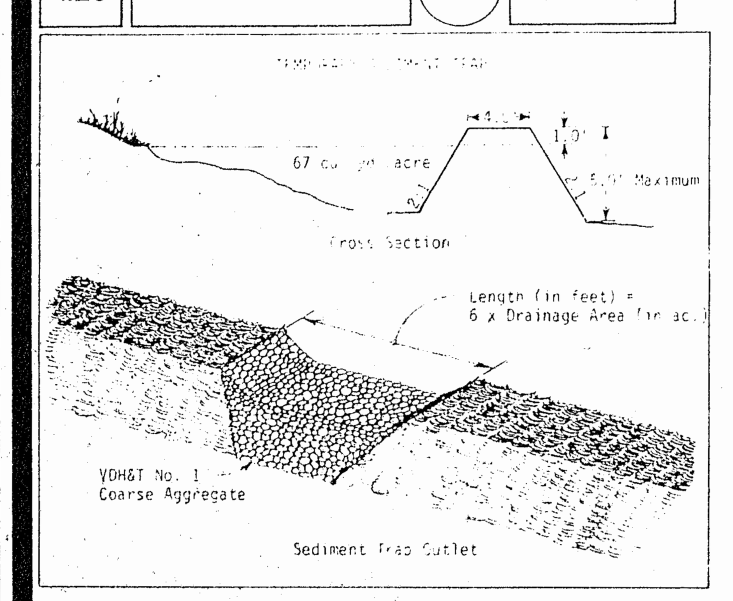

Construction Specifications

1. The area under the embankment shall be cleared, grubbed, and stripped of any vegetation and root mat. To facilitate cleanout, the pool area should be cleared.
2. Fill material for the embankment shall be free of roots or other woody vegetation, organic material, large stones, and other objectionable material. The embankment should be compacted in 8-inch layers by traversing with construction equipment.
3. The earthen embankment shall be seeded with temporary or permanent vegetation (see Std. & Spec. 1.65 and 1.66) within 15 days of construction.
4. Construction operations shall be carried out in such a manner that erosion and water pollution are minimized.
5. The structure shall be removed and the area stabilized when the upslope drainage area has been stabilized.
6. All cut and fill slopes shall be 2:1 or flatter.

Maintenance

1. Sediment shall be removed and the trap restored to its original dimensions when the sediment has accumulated to 1/2 the design volume of the trap. Sediment removed from the basin shall be deposited in a suitable area and in such a manner that it will not erode.
2. The structure should be checked regularly to insure that it is structurally sound and has not been damaged by erosion or construction equipment. The height of the outlet should be checked to insure that its center is at least one foot below the top of the embankment.

1.36	OUTLET PROTECTION	OP

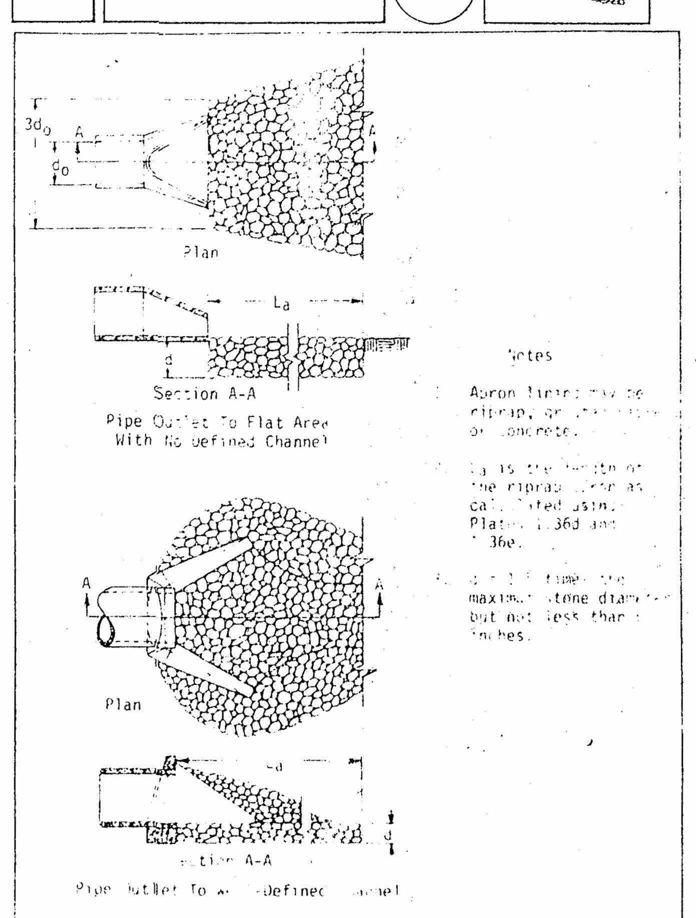

1.37	RIPRAP	RR

Construction Specifications

Subgrade Preparation: The subgrade for the riprap or filter shall be prepared to the required lines and grades. Any fill required in the subgrade shall be compacted to a density approximating that of the surrounding undisturbed material. Brush, trees, stumps and other objectionable material shall be removed.

Maintenance

1.38	CHECK DAMS	CD

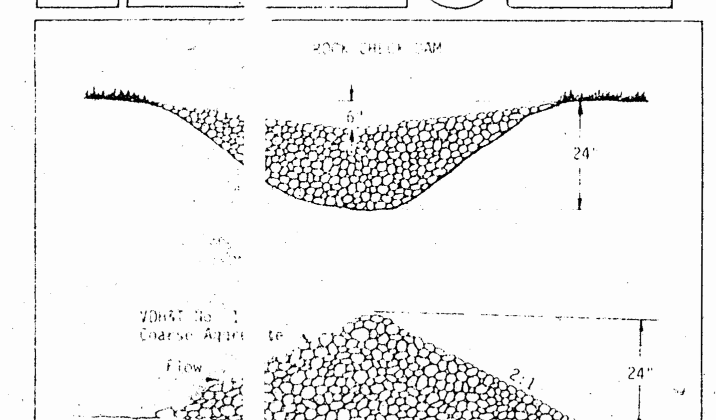

Sediment Removal

While this practice is not intended to be used primarily for sediment trapping, some sediment will accumulate behind the check dams. Sediment should be removed from behind the check dams when it has accumulated to one half of the original height of the dam.

Removal

Check dams must be removed when their useful life has been completed. In temporary ditches and swales, check dams should be removed and the ditch filled in when it is no longer needed. In permanent structures, check dams should be removed when a permanent lining can be installed. In the case of grass-lined ditches, check dams should be removed when the grass has matured sufficiently to protect the ditch or swale. The area beneath the check dams should be seeded and mulched immediately after they are removed.

Maintenance

Check dams should be checked for sediment accumulation after each significant rainfall. Sediment should be removed when it reaches one half of the original height or before.

Regular inspections should be made to insure that the center of the dam is lower than the edges. Erosion caused by high flows around the edges of the dam should be corrected immediately.

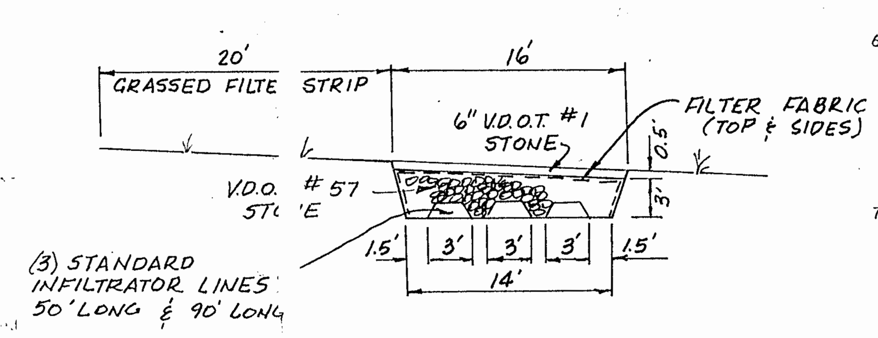

INFILTRATION TRENCH DETAIL

SCALE : 1" = 10'

EROSION AND SEDIMENT CONTROL NOTES

THE PURPOSE OF THE EROSION CONTROL MEASURES SHOWN ON THESE PLANS SHALL BE TO PRECLUDE THE TRANSPORT OF ALL WATERBORNE SEDIMENTS RESULTING FROM CONSTRUCTION ACTIVITIES FROM ENTERING ONTO ADJACENT PROPERTIES OR STATE WATERS. IF FIELD INSPECTION REVEALS THE INADEQUACY OF THE PLAN TO CONFINE SEDIMENT TO THE PROJECT SITE, APPROPRIATE MODIFICATIONS WILL BE MADE TO CORRECT ANY PLAN DEFICIENCIES.

1. ALL EROSION AND SEDIMENT CONTROL MEASURES SHALL BE INSTALLED AND MAINTAINED IN ACCORDANCE WITH THE "VIRGINIA EROSION AND SEDIMENT CONTROL HANDBOOK". THE CONTRACTOR SHALL BE THOROUGHLY FAMILIAR WITH ALL APPLICABLE MEASURES CONTAINED THEREIN WHICH MAY BE PERTINENT TO THIS PROJECT.
2. ALL POINTS OF CONSTRUCTION INGRESS AND EGRESS SHALL BE PROTECTED BY A TEMPORARY CONSTRUCTION ENTRANCE TO PREVENT TRACKING OF MUD ONTO PUBLIC RIGHT-OF-WAYS. AN ENTRANCE PERMIT FROM VDOT IS REQUIRED PRIOR TO ANY CONSTRUCTION ACTIVITIES WITHIN STATE RIGHT-OF-WAYS.
3. SEDIMENT BASINS AND TRAPS, PERIMETER DIKES, SEDIMENT BARRIERS AND OTHER MEASURES INTENDED TO TRAP SEDIMENT ON-SITE MUST BE CONSTRUCTED AS A FIRST STEP IN GRADING AND BE MADE FUNCTIONAL BEFORE UPSLOPE LAND DISTURBANCE TAKES PLACE. EARTHEN STRUCTURES SUCH AS DAMS, DIKES, AND DIVERSIONS MUST BE SEEDED AND MULCHED WITHIN 15 DAYS OF INSTALLATION. AN ON-SITE PRE-CONSTRUCTION MEETING WILL BE HELD BETWEEN THE OFFICE OF CODE COMPLIANCE AND THE CONTRACTOR TO IDENTIFY THOSE MEASURES TO BE INITIALLY INSTALLED.
4. MAINTENANCE OF ALL EROSION AND SEDIMENT CONTROL MEASURES SHALL BE ACCOMPLISHED IN ACCORDANCE WITH THE "VIRGINIA EROSION AND SEDIMENT CONTROL HANDBOOK". MAINTENANCE WILL INCLUDE THE REPAIR OF MEASURES DAMAGED BY ANY SUBCONTRACTOR INCLUDING THOSE OF THE PUBLIC UTILITY COMPANIES. AT THE PRE-CONSTRUCTION MEETING, THE CONTRACTOR WILL SUPPLY CODE COMPLIANCE WITH THE NAME OF THE INDIVIDUAL WHO WILL BE RESPONSIBLE FOR ENSURING MAINTENANCE OF INSTALLED MEASURES ON A DAILY BASIS.
5. SURFACE FLOWS OVER CUT AND FILL SLOPES SHALL BE CONTROLLED BY EITHER REDIRECTING FLOWS FROM TRANSVERSING THE SLOPES OR BY INSTALLING MECHANICAL DEVICES TO SAFELY LOWER WATER DOWNSLOPE WITHOUT CAUSING EROSION. A TEMPORARY FILL DIVERSION (STD. & SPEC. 1.16) SHALL BE INSTALLED PRIOR TO THE END OF EACH WORKING DAY.
6. SEDIMENT CONTROL MEASURES MAY REQUIRE MINOR FIELD ADJUSTMENTS AT TIME OF CONSTRUCTION TO INSURE THEIR INTENDED PURPOSE IS ACCOMPLISHED. OFFICE OF CODE COMPLIANCE APPROVAL WILL BE REQUIRED FOR OTHER DEVIATIONS FROM THE APPROVED PLANS.
7. THE CONTRACTOR SHALL STRIP AND PILE TOPSOIL AT THE LOCATIONS SHOWN ON THIS PLAN OR AS DIRECTED BY THE ENGINEER. SILT FENCE SHALL BE PLACED AT THE TOE OF THE STOCKPILE AFTER STRIPPING OF TOPSOIL IS COMPLETE.
8. THE CONTRACTOR SHALL COMPLETE DRAINAGE FACILITIES WITHIN 30 DAYS AFTER FOLLOWING COMPLETION OF ROUGH GRADING AT ANY POINT WITHIN THE PROJECT. THE INSTALLATION OF DRAINAGE FACILITIES SHALL TAKE PRECEDENCE OVER ALL UNDERGROUND UTILITIES. OUTFALL DITCHES FROM DRAINAGE STRUCTURES SHALL BE STABILIZED IMMEDIATELY AFTER CONSTRUCTION OF SAME. THIS INCLUDES INSTALLATION OF EROSION CONTROL STONE WHERE REQUIRED. ANY DRAINAGE OUTFALLS REQUIRED FOR A STREET MUST BE COMPLETED BEFORE STREET GRADING BEGINS.
9. PERMANENT OR TEMPORARY SOIL STABILIZATION MUST BE APPLIED TO ALL DENUDED AREAS WITHIN 15 DAYS AFTER FINAL GRADE IS REACHED ON ANY PORTION OF THE SITE. SOIL STABILIZATION MUST ALSO BE APPLIED TO DENUDED AREAS WHICH MAY NOT BE AT FINAL GRADE BUT WILL REMAIN DORMANT (UNDISTURBED) FOR LONGER THAN 30 DAYS. SOIL STABILIZATION MEASURES INCLUDE VEGETATIVE ESTABLISHMENT, MULCHING AND THE EARLY APPLICATION OF GRAVEL BASE MATERIAL ON AREAS TO BE PAVED.
10. NO MORE THAN 300' OF SANITARY SEWER, STORM SEWER, OR WATERLINES ARE TO BE OPEN AT ONE TIME. FOLLOWING INSTALLATION OF ANY PORTION OF THESE ITEMS, ALL DISTURBED AREAS ARE TO BE IMMEDIATELY STABILIZED (I.E., THE SAME DAY).
11. IF DISTURBED AREA STABILIZATION IS TO BE ACCOMPLISHED DURING THE MONTHS OF DECEMBER, JANUARY, OR FEBRUARY, STABILIZATION SHALL CONSIST OF MULCHING IN ACCORDANCE WITH SPECIFICATION 1.75. SEEDING WILL THEN TAKE PLACE AS SOON AS THE SEASON PERMITS.
12. THE TERM SEEDING, FINAL VEGETATIVE COVER OR STABILIZATION, ON THIS PLAN SHALL MEAN THE SUCCESSFUL GERMINATION AND ESTABLISHMENT OF A STABLE GRASS COVER FROM A PROPERLY PREPARED SEEDBED CONTAINING THE SPECIFIED AMOUNTS OF SEED, LIME, AND FERTILIZER IN ACCORDANCE WITH SPECIFICATION 1.66, PERMANENT SEEDING. IRRIGATION SHALL BE REQUIRED AS NECESSARY TO ENSURE ESTABLISHMENT OF GRASS COVER.
13. ALL SLOPES STEEPER THAN 3:1 SHALL REQUIRE THE USE OF EROSION CONTROL BLANKETS SUCH AS EXCELSIOR BLANKETS TO AID IN THE ESTABLISHMENT OF A VEGETATIVE COVER. INSTALLATION SHALL BE IN ACCORDANCE WITH SPECIFICATION 1.75, MULCHING AND MANUFACTURER'S INSTRUCTIONS.
14. INLET PROTECTION IN ACCORDANCE WITH SPECIFICATION 1.08 SHALL BE PROVIDED FOR ALL STORM DRAIN INLETS AS SOON AS PRACTICAL FOLLOWING CONSTRUCTION OF SAME.
15. TEMPORARY LINERS, SUCH AS POLYETHYLENE SHEETS, SHALL BE PROVIDED FOR ALL PAVED DITCHES UNTIL THE PERMANENT CONCRETE LINER IS INSTALLED.
16. PAVED DITCHES SHALL BE REQUIRED WHEREVER EROSION IS EVIDENT. PARTICULAR ATTENTION SHALL BE PAID TO THOSE AREAS WHERE GRADES EXCEED 3%.
17. TEMPORARY EROSION CONTROL MEASURES ARE NOT TO BE REMOVED UNTIL ALL DISTURBED AREAS ARE STABILIZED. AFTER STABILIZATION IS COMPLETE, ALL MEASURES SHALL BE REMOVED WITHIN 30 DAYS. TRAPPED SEDIMENT SHALL BE SPREAD AND SEEDED.
18. OFF-SITE WASTE OR BORROW AREAS SHALL BE APPROVED BY THE OFFICE OF CODE COMPLIANCE PRIOR TO THE IMPORT OF ANY BORROW OR EXPORT OF ANY WASTE TO OR FROM THE PROJECT SITE.
19. ALL PAVED AND/OR PIPED OUTFALLS WILL BE CONSTRUCTED BEFORE ROAD GRADING AND UTILITY INSTALLATION BEGINS.

NOTE: ALL STANDARD DETAILS FROM THE VIRGINIA EROSION CONTROL HANDBOOK

EROSION CONTROL DETAILS

OUTDOOR WORLD CORPORATION

WILLIAMSBURG RESORT

JAMES CITY COUNTY, VIRGINIA

THE DEYOUNG-JOHNSON GROUP, INC.
ENGINEERS · ARCHITECTS · SURVEYORS
P.O. BOX 197 WILLIAMSBURG, VIRGINIA 23187 (804) 253-0673

DATE	DESIGNED	DRAWN	CHECKED
JUNE 6, 1989	LDE		

1890290

WC005_OUTDOOR_WORLD - 006

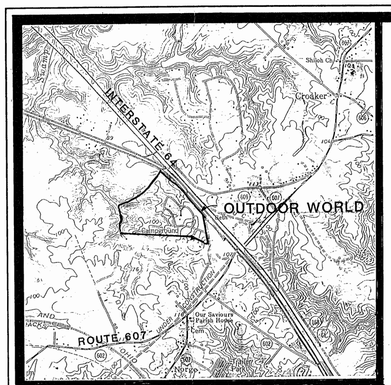

VICINITY MAP SCALE: 1": 2000'

SITE STATISTICS

TOTAL AREA: 54.7 ACRES
ZONING: A-1 RESERVOIR PROTECTION
EXISTING CAMPSITES: 195 SITES
- 180 R.V. SITES
- 15 CAMPSITES

PROPOSED CAMPSITES: 71 R.V. SITES
- APPROXIMATE NUMBER OF PROPOSED R.V. SITES TO BE DEPENDENT IN TOPOGRAPHIC & UTILITY CONSTRAINTS
- ALL PROPOSED SITES TO BE APPROXIMATELY 30' x 50'
- ALL PROPOSED SITES TO BE SERVED BY SEWER (SEPTIC), WATER & ELECTRICAL POWER
- ALL PROPOSED UTILITES TO BE UNDERGROUND
- MINIMIZE CLEARING TO MAINTAIN MAXIMUM TREE COVERAGE ON PROPOSED SITES

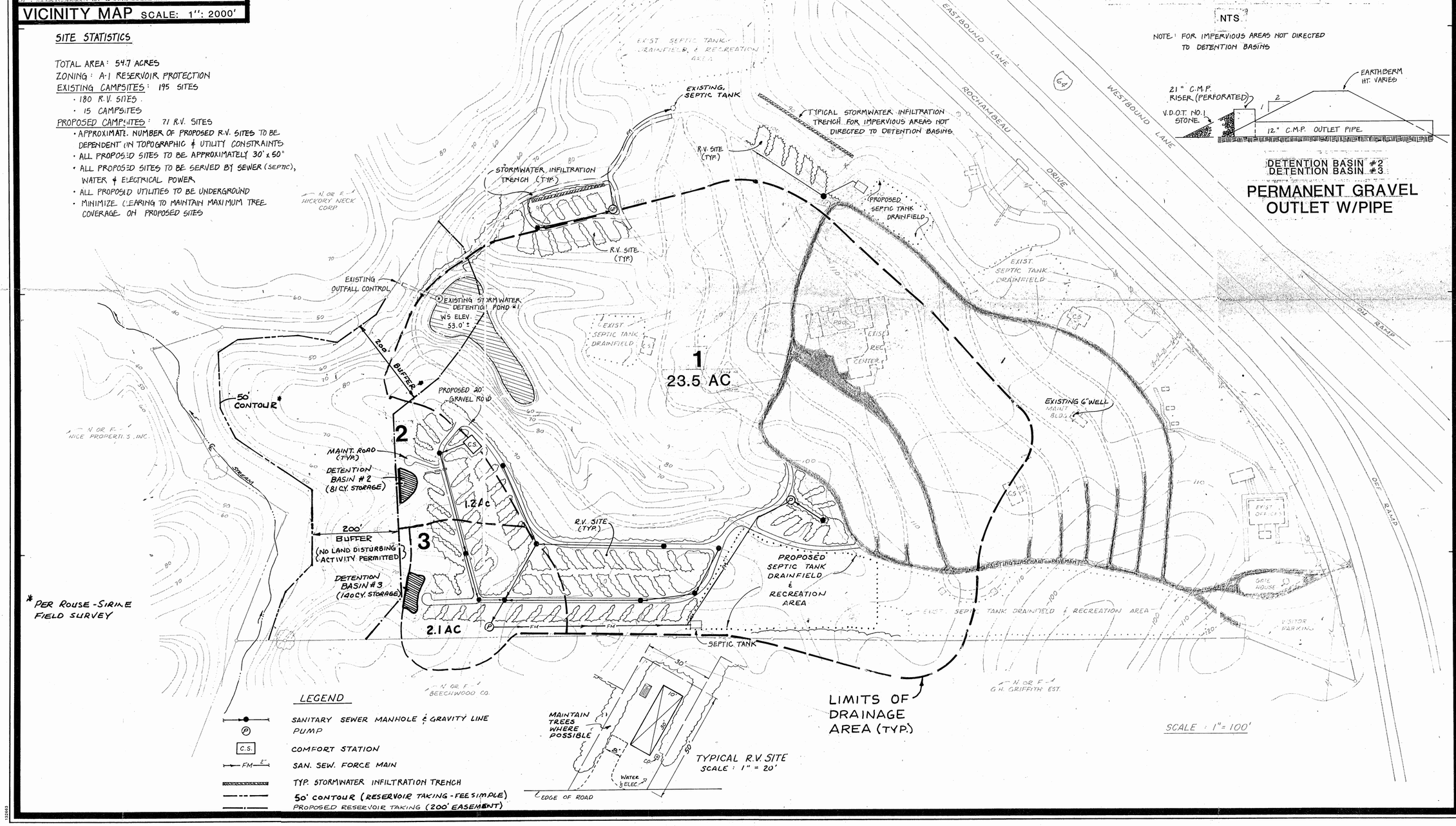

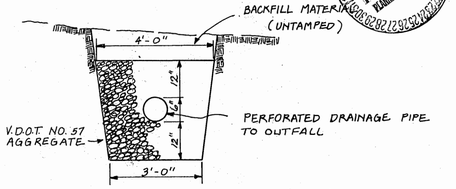

SECTION - INFILTRATION TRENCH

NTS

NOTE: FOR IMPERVIOUS AREAS NOT DIRECTED TO DETENTION BASINS

DETENTION BASIN #2
DETENTION BASIN #3

PERMANENT GRAVEL OUTLET W/PIPE

* PER ROUSE-SIRINE FIELD SURVEY

LEGEND

- SANITARY SEWER MANHOLE & GRAVITY LINE
- PUMP
- C.S. COMFORT STATION
- FM 2" SAN. SEW. FORCE MAIN
- TYP. STORMWATER INFILTRATION TRENCH
- 50' CONTOUR (RESERVOIR TAKING - FEE SIMPLE)
- PROPOSED RESERVOIR TAKING (200' EASEMENT)

PROPOSED EXPANSION - RUNOFF ANALYSIS PLAN

OUTDOOR WORLD CORPORATION
WILLIAMSBURG RESORT
JAMES CITY COUNTY, VIRGINIA

REVISED 2-6-89 - SHOW RESERVOIR TAKING & LOSS OF 19 R.V. SITES

THE DEYOUNG-JOHNSON GROUP, INC.
ENGINEERS · ARCHITECTS · SURVEYORS
P.O. BOX 197 WILLIAMSBURG, VIRGINIA 23187 (804) 253-0673

DATE DEC. 20, 1988	DESIGNED D.P.C.	DRAWN T.C.S.	CHECKED L.D.E.

1880251

1 of 1

FEB 1989 RECEIVED PLANNING DEPARTMENT

WC005

RUN-OFF ANALYSIS

FOR

OUTDOOR WORLD CORPORATION

WILLIAMSBURG RESORT EXPANSION

JAMES CITY COUNTY, VIRGINIA

DECEMBER 1, 1988

DEC 1988
RECEIVED
PLANNING DEPARTMENT

THE DEYOUNG-JOHNSON GROUP, INC.

RUN-OFF ANALYSIS

FOR

OUTDOOR WORLD CORPORATION

WILLIAMSBURG RESORT EXPANSION

DAVID P. CAMPBELL
PROJECT HYDROLOGIST

DANIEL J. DEYOUNG
PRINCIPAL ENGINEER

COMMONWEALTH OF VIRGINIA
DANIEL J. DE YOUNG
No.
3517
CERTIFIED PROFESSIONAL ENGINEER

OUTDOOR WORLD OF WMBG.

57.41 ACRES TOTAL

7.6 ACRES DISTURBED
332,607 S.F

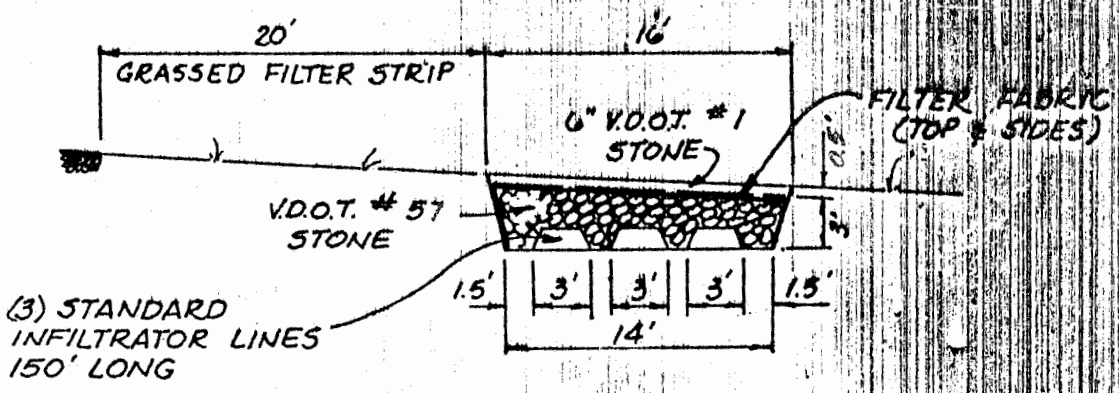

INFILTRATION TRENCH (A/1)

SCALE : 1" = 10'

NOTES:

THE DeYOUNG-JOHNSON GROUP, INC.
P. O. Box 197
WILLIAMSBURG, VA 23187
(804) 253-0673

JOB OUTDOOR WORLD 1880252
SHEET NO. ____ OF ____
CALCULATED BY GLS DATE 7/31/89
CHECKED BY ____ DATE ____
SCALE ____

DRAINAGE AREA # 2 = 1.11 AC / 48,389 S.F

IMPERVIOUS AREA:

PAVED ROAD = 5,858 S.F

CAMPSITES = (13) × 500 = 6,500 S.F.

TOTAL = 12,358 S.F

12,358 × 0.8' = 989 CU.FT REQUIRED

* INFILTRATION TRENCH = 1.4 S.F PER FOOT × 3 = 4.20
STONE AREA VOLUME = [(3' × 15') − (3 × 1.4)] × .40 = 16.32 } 20.52 S.F/FT

TOTAL VOLUME PROVIDED: 50' × 20.52 S.F = 1026 CU.FT

DRAINAGE AREA #3 = 1.96 AC / 85,401 S.F

IMPERVIOUS AREA:

PAVED ROAD = 12,801 S.F.

CAMPSITES = (20) @ 500 S.F = 10,000

TOTAL = 23,301 SF

22,801 SF × 0.08' = 1824 CU.FT REQUIRED

TOTAL VOLUME PROVIDED: 90' × 20.52 S.F = 1847 CU.FT.

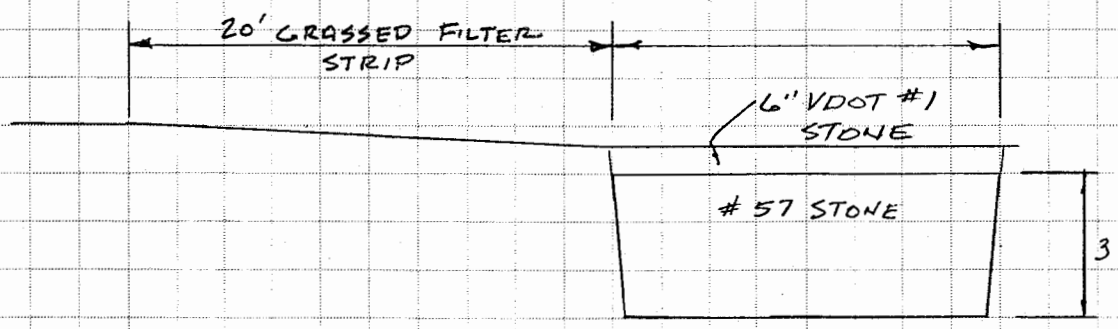

TABLE OF CONTENTS

		PAGE
TABLE OF CONTENTS		
I.	INTRODUCTION	1
	Scope of Report	2
	Summary of Findings	3
II.	DESCRIPTION OF PROPOSED PROJECT	4
	Introduction	5
	Location	5
	Topography	5
	Land Use	6
III.	CHARACTERISTICS OF RUNOFF	7
	Introduction	8
	Rainfall Criteria	8
	Runoff Analysis	9
	Summary	17
	Nonpoint Pollution Analysis	18
IV.	RUNOFF AND POLLUTANT MITIGATION AND PERFORMANCE CRITERIA	23
	Introduction	24
	Control practices	25
	Characterization of Detention Basins	25
	Sedimentation Processes	27
	Summary	28
REFERENCES		
APPENDIX A	Computer runoff model output of 2 year storm, 10 year storm and 100 year storm discharge and routing for Existing Pond #1.	
APPENDIX B	James City County erosion and sedimentation control plan notes.	
APPENDIX C	James City County's criteria for design of detention basins.	

WC005_OUTDOOR_WORLD - 013

I. INTRODUCTION

WC005_OUTDOOR_WORLD - 014

Scope of Report

This runoff analysis report for The Outdoor World Corporation's Williamsburg Resort expansion project has been prepared in accordance with the requirements and guidelines as set forth in the James City County Reservoir Protection Overlay District design manual for runoff analysis and article XI overlay districts, James City County Zoning Ordinance. The study addresses a descriptive critique of the total project, characteristics of pre-development natural runoff and projected post-development runoff, characteristics of pollutant loadings, measures to reduce the loadings both during and after construction, proposed runoff control and reservoir protection measures and performance criteria of the control practices.

The basic design parameters and summary conclusions presented in this report are based upon preliminary engineering investigation and design. This information is subject to a more detailed analysis concurrent with submission of a final site plan for The Outdoor World Resort Expansion for County approval. Plans of construction for the detention facilities, specifications and details will be developed for each facility as the final site plan is prepared. These plans will be contingent upon approval of the preliminary plan of development and runoff analysis by James City County. As a supplement to this report, the runoff analysis plan exhibit depicts preliminary analysis and summary information regarding existing topography, soils, project boundaries, drainage patterns and basin limits and location of proposed stormwater management facilities.

WC005_OUTDOOR_WORLD - 015

Summary of Findings

Based upon the application of Best Management Practices as well as specific control measures currently in place and of the proposed drainage facilities it is anticipated that a minimum seventy-five percent reduction of peak stormwater runoff and contaminant loadings can be expected.

The peak outflow rate from a 10-year storm should be less than the runoff rate from the pre-development 2-year storm. Sediment loading will be reduced from 3.22 ~~2.026~~ tons per year (post-development condition) to .81 ~~0.50~~ tons per year, which is a 67 ~~68%~~ **reduction from predevelopment conditions (2.44 ~~1.579 tons~~).** Phosphorus loading will be reduced from 16.9 ~~13.17~~ lbs. per year (post-development) to 4.2 ~~3.3~~ lbs. per year which is a 69% ~~67%~~ **reduction from the pre-development condition loading of** 13.5 ~~9.9~~ **lbs.** per year. The reduction in pollutant loading and stormwater runoff will be further enhanced by standard erosion and sedimentation control measures required by James City County.

WC005_OUTDOOR_WORLD - 016

II. DESCRIPTION OF PROPOSED PROJECT

WC005_OUTDOOR_WORLD - 017

Introduction

Outdoor World's Williamsburg Resort is a multi-use time share family campground encompassing 57.4 Ac. The resort currently provides sites for 187 recreational vehicles and 15 tent campers with a proposed future expansion of approximately ~~90~~ 71 sites with a new bathhouse within its current boundary. Approximately 75% of the existing campsites are served by a central water system, septic sanitary sewer facilities, and electrical hookups. These service utilities will be extended to serve the new camp sites. Recently (August 1988), James City County has expressed its intention of acquiring a portion of the property as a buffer to the Ware Creek Reservoir. The extent of this buffer acquisition is approximated on the runoff plan.

Location

Outdoor World's Williamsburg resort is located in James City County at the southwest intersection of interstate 64 and Croaker Road (S.R. 607) on Rochambeau Drive (S.R. 30). The property is further indentified as parcel (1-10) on tax map sheet (13-4) and is currently zoned A-1. Rank America, Inc. is the present owner and developer of this project.

Topography

The land form in the general area varies, ranging from gentle slopes (0%-3%) to steeper slopes (above 8%) found along the drainage ravines. Elevations at the project range from elevation 35 (NGS DATUM) along the proposed reservoir buffer to elevation 115 (NGS) at the middle of the site. Approximately 50% of the project is wooded (hardwoods and pines) and can be found along the steeper slopes. The remaining 50% is developed wooded campsites, roads, buildings and an existing stormwater management pond. Drainage is via culverts and natural ravines to the France Swamp watershed, a tributary stream of Ware Creek.

WC005_OUTDOOR_WORLD - 018

Land Use

Approximately 15% of the project watershed area, in its present state, is identified as impervious surfaces. This includes existing trailers, road surface and the existing pond. Upon full development, the impervious areas should be approximately 18%-20%. These impervious surfaces will include existing and new roadway pavement, existing buildings with associated walks and patios, recreational vehicles, and the water surface of the existing detention pond.

Due to the project being located within the Ware Creek reservoir protection overly district it is subject to all applicable zoning requirements and regulations. These regulations are intended to insure the protection of watersheds surrounding current or potential public water supply reservoirs. Special requirements for permitted uses include a 100' wide buffer easement from the edge of any tributary stream and restrictive uses within the and 200' from the normal pool elev. easement.

WC005_OUTDOOR_WORLD - 019

III. CHARACTERISTICS OF RUNOFF

WC005_OUTDOOR_WORLD - 020

Introduction

Predictive storm runoff response and numerical representation to define rainfall/runoff relationships is based on computer modeling of the soil Conservation Service TR-55 peak Discharge Method and the Soil Conservation Service TP-149 Incremental Hydrograph Procedure. The computer model generates peak discharge, time increments and ordinates of the composite runoff hydrograph, and time increments and outflow discharge of a routed hydrograph through a specified detention facility. The storage-indication method is utilized in the routine procedure. With this method, the storage-discharge relation is used for repeatedly solving the continuity equation, each solution being one step in delineating the outflow hydrograph. (See Appendix A for existing basin and routing.)

Rainfall Criteria

The design storm chosen to determine the quantity of rainfall is described by using three variables: the return period, duration, and distribution. The frequency or recurrence interval is the probable period of time within which combinations of intensity and duration repeat themselves. The duration is the time during which rainfall prevails at that rate. The distribution of the rainfall relates volume with respect to time.

Predevelopment runoff response is predicted using the 2-year recurrence interval rainfall of a 24 hour duration. The 2-year design storm corresponds with the minimum State stormwater management criteria presented in the Virginia Erosion and Sediment Control Handbook. Post development runoff is based on proposed development characteristics for the individual land use elements and a 10-year recurrence interval rainfall of a 24 hour duration. The 10-year design storm corresponds with the design frequency used by Virginia Department of Transportation for secondary road system drainage design. The distribution of the design storm is based on the Type II storm distribution presented in SCS TP-149. This distribution is

WC005_OUTDOOR_WORLD - 021

consistent with VDOT recommendations and SCS TR-55 methodology. The Type II storm distributions are based on generalized rainfall depth duration relationships obtained from National Weather Service technical papers.

Runoff Analysis

Basic information as input to the computer model includes watershed area, hydrologic soil group, land use elements, percentage of impervious area, runoff curve number (represents the effect of the hydrologic soil-cover complex on the amount of rainfall that is runoff), rainfall depths, various adjustment factors for peak rates of discharge and detention storage-discharge relationships.

To facilitate the evaluation of stormwater runoff, the total watershed drainage area for the Outdoor World Resort was divided into three hydrologic sub-basin areas based on drainage patterns and preliminary siting of stormwater control facilities. These sub-basin areas are analyzed individually for runoff volumes and peak rates of discharge, characteristics of pollutants and loading factors, and performance ratings for control practices with conclusions summarized for overall watershed management evaluation.

All of the individual hydrologic sub-basin identifications are referenced to proposed detention impoundments, namely, existing pond 1 and detention basins 2 and 3. The naming convention for the impoundments is for continuity of stormwater planning for the total properties under development.

The Soil Conservation Service (SCS) Hydrologic Soil Group classifications are used to describe runoff potential based on infiltration rate. Soils are grouped according to the intake of water when the soils are thoroughly wet and receive precipitation from long duration storms. The general characteristics of each hydrologic soil group is given in TABLE 1. TABLE 2 lists the general soil texture and the percentage of each hydrologic soil group associated with each sub-drainage basin identification.

TABLE 1

HYDROLOGIC SOIL CLASSIFICATIONS

Hydrologic Soil Group	General Characteristics
A	Soils having high infiltration rates even when thoroughly wetted, consisting chiefly of deep, well-drained to excessively drained sands or gravels, or both. These soils have a high rate of water transmission and would result in low runoff potential.
B	Soils having moderate infiltration rates when thoroughly wetted, consisting chiefly of moderately deep to deep, moderately well-drained to well-drained soils with moderately fine to moderately coarse textures. These soils have a moderate rate of water transmission and a moderate runoff potential.
C	Soils having a slow infiltration rate when thoroughly wetted, consisting chiefly of soils with a layer that impedes the downward movement of water or soils with moderately fine to fine texture and slow infiltration rate. These soils have a slow rate of water transmission and a high runoff potential.
D	Soils having very slow infiltration rates when thoroughly wetted, consisting chiefly of clay soils with a high swelling potential, soils with a high permanent water table, soils with claypan or clay layer near the surface, and shallow soils over nearly impervious materials. These soils have a very slow rate of water transmission and a very high runoff potential.

WC005_OUTDOOR_WORLD - 023

TABLE 2

SOIL TEXTURE & GROUP IDENTIFICATION

Basin Identification	Total Area	Soil Group % A	B	C	D	Soil Texture
Existing Pond 1	23.5	20	-	80	-	Fine Loamy Sand/Sandy Loam
Basin 2	2.5	50	-	50	-	Fine Loamy Sand/Sandy Loam
Basin 3	3.4	50	-	50	-	Fine Sandy Loam

In terms of soil texture, sandy loam soils predominate at all sub-basin areas. Within the study area, three soil types have been identified and mapped by the Soil Conservation District. These are presented in TABLE 3 along with their respective hydrologic soil group.

The soils on the site are classified as Emporia, Craven, and Uchee. Soils of these series are generally deep, well drained and moderately well drained that dominantly are loamy or clayey. The soils in these are moderately well suited to sanitary facilities and community development. Permeability is moderate in the upper part of the subsoil and moderately slow to slow in the lower part. The erosion hazard is predominantly moderate with limited areas within the slight hazard and severe hazard range.

TABLE 3

PREVALENT SOILS & HYDROLOGIC GROUPING

Mapping Soil Name	Hydrologic Grouping
Uchee	A
Craven	C
Emporia Fine Sandy Loam	C

WC005_OUTDOOR_WORLD - 024

A major parameter characterizing the drainage area is the runoff curve number, RCN, which is the basis of the SCS soil-cover complex procedure used in SCS TR-55 and SCS TP-149 methods. The runoff curve number represents a runoff potential and is a function of the hydrologic soil group and type of land use or ground cover. TABLES 4A and 4B gives RCN's for agricultural, suburban, and urban land use classification. The runoff curve numbers were assigned to each sub-basin area by identifying the existing and potential land use within each sub-basin drainage limits (Table 5). Existing land use was determined from James City County aerial topographic maps.

In urban situations it is necessary to adjust the peak rate of runoff from various adjustment factors. These adjustments account for impervious areas, modified hydraulic length, and for swampy or ponding areas. Paved surfaces increase the amount of runoff and decrease time of concentration through increased velocities. Hydraulic length modification through paved channels, conduits, or other forms of improvements to natural channels increase velocities and decrease time of concentration. Swampy or ponding areas cause runoff to be retained in temporary storage thereby reducing peak runoff and increasing time of concentration.

The purpose of detention is to attenuate the hydraulic response of storm runoff so as to reduce peak discharge. Detention basically detains the bulk of storm water for a period not significantly longer than the natural runoff duration. Detention structures reduce the peak discharge rate by detaining a certain amount of runoff and controlling its release. TABLE 6 summarizes the individual drainage basin stormwater inflow data. TABLE 7 summarizes the stormwater runoff response and storm routing controlled outflow for each basin identifier. Existing Pond #1 was chosen for routing because it will receive a majority of the runnoff from the proposed expansion areas. (See Appendix A).

WC005_OUTDOOR_WORLD - 025

TABLE 4A

Cover description		Curve numbers for hydrologic soil group—			
Cover type and hydrologic condition	Average percent impervious area[2]	A	B	C	D
Fully developed urban areas (vegetation established)					
Open space (lawns, parks, golf courses, cemeteries, etc.)[3]:					
Poor condition (grass cover < 50%)		68	79	86	89
Fair condition (grass cover 50% to 75%)		49	69	79	84
Good condition (grass cover > 75%)		39	61	74	80
Impervious areas:					
Paved parking lots, roofs, driveways, etc. (excluding right-of-way)		98	98	98	98
Streets and roads:					
Paved; curbs and storm sewers (excluding right-of-way)		98	98	98	98
Paved; open ditches (including right-of-way)		83	89	92	93
Gravel (including right-of-way)		76	85	89	91
Dirt (including right-of-way)		72	82	87	89
Western desert urban areas:					
Natural desert landscaping (pervious areas only)[4]		63	77	85	88
Artificial desert landscaping (impervious weed barrier, desert shrub with 1- to 2-inch sand or gravel mulch and basin borders)		96	96	96	96
Urban districts:					
Commercial and business	85	89	92	94	95
Industrial	72	81	88	91	93
Residential districts by average lot size:					
1/8 acre or less (town houses)	65	77	85	90	92
1/4 acre	38	61	75	83	87
1/3 acre	30	57	72	81	86
1/2 acre	25	54	70	80	85
1 acre	20	51	68	79	84
2 acres	12	46	65	77	82
Developing urban areas					
Newly graded areas (pervious areas only, no vegetation)[5]		77	86	91	94
Idle lands (CN's are determined using cover types similar to those in table 2-2c).					

[1]Average runoff condition, and $I_a = 0.2S$.
[2]The average percent impervious area shown was used to develop the composite CN's. Other assumptions are as follows: impervious areas are directly connected to the drainage system, impervious areas have a CN of 98, and pervious areas are considered equivalent to open space in good hydrologic condition. CN's for other combinations of conditions may be computed using figure 2-3 or 2-4.
[3]CN's shown are equivalent to those of pasture. Composite CN's may be computed for other combinations of open space cover type.
[4]Composite CN's for natural desert landscaping should be computed using figures 2-3 or 2-4 based on the impervious area percentage (CN = 98) and the pervious area CN. The pervious area CN's are assumed equivalent to desert shrub in poor hydrologic condition.
[5]Composite CN's to use for the design of temporary measures during grading and construction should be computed using figure 2-3 or 2-4 based on the degree of development (impervious area percentage) and the CN's for the newly graded pervious areas.

TABLE 4B

Cover description		Curve numbers for hydrologic soil group—			
Cover type	Hydrologic condition	A	B	C	D
Pasture, grassland, or range—continuous forage for grazing.[2]	Poor	68	79	86	89
	Fair	49	69	79	84
	Good	39	61	74	80
Meadow—continuous grass, protected from grazing and generally mowed for hay.	—	30	58	71	78
Brush—brush-weed-grass mixture with brush the major element.[3]	Poor	48	67	77	83
	Fair	35	56	70	77
	Good	[4]30	48	65	73
Woods—grass combination (orchard or tree farm).[5]	Poor	57	73	82	86
	Fair	43	65	76	82
	Good	32	58	72	79
Woods.[6]	Poor	45	66	77	83
	Fair	36	60	73	79
	Good	[4]30	55	70	77
Farmsteads—buildings, lanes, driveways, and surrounding lots.	—	59	74	82	86

[1]Average runoff condition, and $I_a = 0.2S$.

[2]*Poor:* <50% ground cover or heavily grazed with no mulch.
Fair: 50 to 75% ground cover and not heavily grazed.
Good: >75% ground cover and lightly or only occasionally grazed.

[3]*Poor:* <50% ground cover.
Fair: 50 to 75% ground cover.
Good: >75% ground cover.

[4]Actual curve number is less than 30; use CN = 30 for runoff computations.

[5]CN's shown were computed for areas with 50% woods and 50% grass (pasture) cover. Other combinations of conditions may be computed from the CN's for woods and pasture.

[6]*Poor:* Forest litter, small trees, and brush are destroyed by heavy grazing or regular burning.
Fair: Woods are grazed but not burned, and some forest litter covers the soil.
Good: Woods are protected from grazing, and litter and brush adequately cover the soil.

TABLE 5

COMPOSITE CURVE NUMBER

Pre-Conditions				Post Conditions		
		CN	Soil Type		CN	Soil Type
Existing	50% Gravel/Dirt	87	C	50% Dirt/Gravel	87	C
Pond 1	30% Good Woods	70	C	15% Dirt/Gravel	72	A
	20% Good Woods	30	A	30% Good Woods	70	C
	Weighted Value	71		5% Good Woods	30	A
				Weighted Value	77	
Basin 2	50% Good Woods	70	C	50% Dirt/Gravel	72	A
	50% Good Woods	30	A	50% Good Woods	70	C
	Weighted Value	50		Weighted Value	71	
Basin 3	50% Good Woods	70	C	50% Dirt/Gravel	72	A
	50% Good Woods	30	A	50% Good Woods	70	C
	Weighted Value	50		Weighted Value	71	

WC005_OUTDOOR_WORLD - 028

TABLE 6

INPUT DESIGN DATA SUMMARY

Basin Ident.	Drainage Area (A)	Hydraulic* Length (ft)	Average Slope%	Pre-development Composite Curve Number	Pre-development Imperv. Area %	Post-development Composite Curve Number	Post-development Imperv. Area %	
Ex.Pond 1	23.5	1200	7	71	15	77	18	30,710 ft²
Basin 2	2.5	450	7	50	-	71	15	16,335 ft²
Basin 3	3.4	500	7	50	-	71	15	22,216 ft²

*Hydraulic Length modified 10% for post-development conditions.

65% IMP AREA =

18% IMP AREA = .18 × 23.5 × 44.3 = 187.4

82 PERV. AREA = .82 × 23.5 × 14.1 = 271.7

459.1

PERM POOL STOR VOL = 459.1 × .0385 × .0833 = 1.4 ac·ft

TABLE 7

STORMWATER RUNOFF RESPONSE

Basin Identifier	Pre-development Peak Discharge 2 Year	Pre-development Peak Discharge 10 Year	Post-development Peak Discharge 2 Year	Post-development Peak Discharge 10 Year	10 Yr. Routing Basin Outflow (CFS)	Outflow Control*
Ex.Pond 1	28	77	44	101	16	18" CMP
Basin 2	1	2	3	9	1	12" CMP
Basin 3	1	3	5	12	1	12" CMP

*With C.M.P. riser and emergency overflow spillway

30,710
900
2400
33,010

Need to provide a 24 hour drawdown

$A = \pi r^2$

$\frac{.003 ft^2}{\pi} = r^2 = \frac{.447 in^2}{\pi}$

$r = .377 in$

$33,000 \times \frac{1}{12} = 2750 ft^3$

$\frac{2750 ft^3}{24 hr \times 60 \frac{min}{hr} \times 60 \frac{sec}{min}} = .03 ft^3/sec$

$Q = CA\sqrt{2gh} = .6 A \sqrt{2 \cdot 32.2 \times .15}$

$.03 = A = .003 ft^2$

WC005_OUTDOOR_WORLD - 029

Summary

Design storms of 2 years, 10 years, and 100 years were routed through the existing stormwater management pond (#1) and it appears to be more than adequate to handle any future increase in runoff from its drainage area. The existing controls, which are in place, are in good shape and functioning as designed. Basin 2 and 3 will be designed as "Dry Ponds" with permanent outfall controls. Isolated individual areas, which do not drain into these detention facilities, will utilize inflitration trenches to intercept runoff and filter out pollutants. — be sized upon submission of final site plan

The detention facilities will reduce the total peak discharge based on a 10 year recurrence interval rainfall a minimum of seventy five percent. The projected outflow rate will be less than or equal to the runoff rate from the watershed in its predevelopment condition. ↳ needs to be 24 hour drawdown

Design considerations for the detention facilities includes siting dependent upon topographic considerations, pool storage volume and dimensions, peak flow control storage, predetermined release rate criteria, principal spillway and embankment details, emergency spillway provision, and maintenance requirements. Certain of these parameters will be addressed upon preparation of final construction drawings for each respective detention basin facility.

WC005_OUTDOOR_WORLD - 030

Nonpoint Pollution analysis

According to the BMP Handbook, "nonpoint source pollution can be described as any pollution whose specific point of generation and whose exact point of entry into a water course cannot be defined. Origins of these contaminants include percolation, seepage, and runoff from agricultural and silvicultural lands and from construction, mining, and urban areas".

Nonpoint source pollution is generally carried over and through soil and ground cover via rainfall and snowmelt. Unlike "point" sources of pollution (mainly industrial and municipal effluent discharge pipes), nonpoint sources are extremely diffuse and come from any land area.

TABLE 8 presents the various sources for major pollutant groups in urban runoff. Oxygen demanding material (BOD) are mostly associated with litter and landscape areas. Nutrients (Phosphorus and Nitrates) are thought to originate from fertilizers applied to landscape areas. Heavy metals and inorganic chemicals (Lead and Zinc) arise mostly from transportation activities. Sediment sources are predominantly associated with construction sites where erosion rates are usually high.

TABLE 8

SOURCE OF CONTAMINANTS

Source	Sediment	Oxygen Demand	Nutrients	Heavy Metals
Street Surface Wear				X
Automobile Wear/Emissions			X	X
Parking Lots		X	X	
Litter		X	X	
Vacant Land	X		X	
Construction Sites	X			

WC005_OUTDOOR_WORLD - 031

TABLES 9 and 10 summarize average annual loading rates for total sediment and phosphorus based on land use classification as it applies to the Outdoor World Project. The reported sediment loadings for urban areas and rural-agriculture land uses reflect washoff from stabilized areas and do not include sediment contribution from stream bank erosion. It is felt that these factors provide a realistic indication of the long-term response of typical land use categories. Applications of the loading factors include comparisons of the pre-development and post-development loading rates for alternative land use proposals. The developed campground areas were assumed, for calculation purposes, to be 18% impervious which is the equivalent of a 2 D.U. land use area. Since the loading factors are expressed on a unit areas basis, the uncontrolled loading projections may be derived by multiplying the area of each land use category by the appropriate loading factor (TABLE 11).

The most predominant increase by percentage in pollutant loadings is sediment loading due to increased volume and velocity of runoff as a result of increased imperviousness which compresses the time distribution of flow. Sediment is in the form of particle and debris washoff from impervious surfaces and land erosion. A primary source of sediment from initial urbanization is construction activities and associated erosion hazards. Construction sites also generate pollutants other than sediment, including chemicals from fertilizers, pesticides, petroleum products and construction chemicals and solid wastes. Nutrients are added to urban runoff from a variety of sources including fertilizer washoff and decomposition of fallen leaves or other organic material. The nutrients of greatest concern are forms of Phosphorus and Nitrogen of which high concentrations can lead to excessive algae growth as a result of oxidation and depletion of dissolved oxygen. Oxygen demanding substances include all organic materials which consume oxygen as they decompose. Animal and bird droppings, fallen leaves, and grass clippings are examples of oxygen-demanding substances.

TABLE 9

UNCONTROLLED NONPOINT POLLUTION RATES: SEDIMENT

LAND USE	PERCENT IMPERVIOUSNESS	ANNUAL LOADING RATE (TONS/ACRE/YR) CLAY LOAM SOILS	SILT LOAM SOILS	LOAM SOILS	SANDY LOAM SOILS
ESTATE SINGLE FAMILY RESIDENTIAL					
A. 0.05 DU/Acre	1.5%	0.08	0.07	0.06	0.02
B. 0.10 DU/Acre	3%	0.08	0.08	0.06	0.03
C. 0.20 DU/Acre	6%	0.10	0.09	0.08	0.04
LARGE-LOT SINGLE FAMILY RESIDENTIAL					
A. 0.5 DU/Acre	9%	0.11	0.11	0.09	0.06
B. 1.0 DU/Acre	12%	0.12	0.12	0.11	0.08
C. 2.0 DU/Acre	18%	0.15	0.15	0.14	0.11
MEDIUM DENSITY SINGLE FAMILY RESIDENTIAL					
A. 3.0 DU/Acre	20%	0.16	0.16	0.15	0.12
B. 4.0 DU/Acre	25%	0.19	0.18	0.17	0.15
C. 5.0-6.0 DU/Acre	35%	0.23	0.23	0.22	0.20
TOWNHOUSE/GARDEN APT. RESIDENTIAL					
A. 6 DU/Acre	35%	0.27	0.26	0.24	0.21
B. 8-10 DU/Acre	40%	0.29	0.29	0.27	0.23
C. 10-20 DU/Acre	50%	0.33	0.33	0.31	0.28
INDUSTRIAL					
A. MEDIUM IMPERVIOUSNESS	60%	0.18	0.18	0.18	0.16
B. HIGH IMPERVIOUSNESS	80%	0.22	0.22	0.22	0.22
SUBURBAN SHOPPING CENTER	90%	0.24	0.24	0.24	0.24
CENTRAL BUSINESS DISTRICT	95%	0.25	0.25	0.25	0.25
CROPLAND					
A. CONVENTIONAL TILLAGE	1%	2.10	1.80	1.44	0.79
B. MINIMUM TILLAGE	1%	0.99	0.76	0.64	0.45
COW PASTURE	1%	0.07	0.06	0.05	0.01
FOREST	1%	0.07	0.06	0.05	0.01
IDLE LAND	1%	0.07	0.05	0.05	0.01

Source: S.C.C. Design Manual for Runoff Analysis

WG005_OUTDOOR_WORLD_033

TABLE 10

UNCONTROLLED NONPOINT POLLUTION LOADING RATES: TOTAL PHOSPHORUS

LAND USE	PERCENT IMPERVIOUSNESS	UNCONTROLLED LOADING RATE (LBS/ACRE/YR) CLAY LOAM SOILS	SILT LOAM SOILS	LOAM SOILS	SANDY LOAM SOILS
ESTATE SINGLE FAMILY RESIDENTIAL					
A. 0.05 DU/Acre	1.5%	0.3	0.3	0.3	0.2
B. 0.10 DU/Acre	3%	0.3	0.3	0.3	0.2
C. 0.20 DU/Acre	6%	0.4	0.4	0.4	0.3
LARGE-LOT SINGLE FAMILY RESIDENTIAL					
A. 0.5 DU/Acre	9%	0.8	0.8	0.8	0.5
B. 1.0 DU/Acre	12%	0.9	0.9	0.8	0.6
C. 2.0 DU/Acre	18%	1.0	1.0	0.9	0.7
MEDIUM DENSITY SINGLE FAMILY RESIDENTIAL					
A. 3.0 DU/Acre	20%	1.0	1.0	1.0	0.8
B. 4.0 DU/Acre	25%	1.1	1.1	1.1	0.9
C. 5.0-6.0 DU/Acre	35%	1.3	1.3	1.3	1.1
TOWNHOUSE/GARDEN APT. RESIDENTIAL					
A. 6 DU/Acre	35%	1.6	1.5	1.4	1.2
B. 8-10 DU/Acre	40%	1.7	1.6	1.5	1.5
C. 10-20 DU/Acre	50%	1.8	1.8	1.7	1.7
INDUSTRIAL					
A. MEDIUM IMPERVIOUSNESS	60%	1.2	1.2	1.2	1.2
B. HIGH IMPERVIOUSNESS	80%	1.4	1.5	1.5	1.4
SUBURBAN SHOPPING CENTER	90%	1.6	1.6	1.6	1.6
CENTRAL BUSINESS DISTRICT	95%	2.7	2.7	2.7	2.7
CROPLAND					
A. CONVENTIONAL TILLAGE	1%	4.9	4.2	3.5	2.3
B. MINIMUM TILLAGE	1%	1.8	1.5	1.4	1.1
COW PASTURE	1%	0.5	0.5	0.5	0.3
FOREST	1%	0.1	0.1	0.1	0.1
IDLE LAND	1%	0.2	0.2	0.2	0.1

Source: J.C.C. Design Manual for Runoff Analysis

WC005-OUTDOOR WORLD - 034

TABLE 11

UNCONTROLLED POLLUTANT LOADING SUMMARY

Sediment (Tons/Ac/Yr) Phosphorus (Lbs/Ac/Yr)

Pre-Development Condition:

Basin Identifier	Land Use	Sediment Rate	Sediment Amount	Phosphorus Rate	Phosphorus Amount
Pond 1	50% Woodlands	.04 ~~0.065~~	~~1.52~~	.55 ~~0.4~~	12.9 ~~9.4~~
	50% 2.D.U.	.15 .095	~~2.52~~ 2.23	.1x.5 .0x.5	
Basin 2	100% Woodlands	~~0.01~~ .035 2.5ac	~~0.025~~ .0875	0.1	0.25
Basin 3	100% Woodlands	~~0.01~~ .035 3.5ac	0.034 .119	0.1	0.34
Total			~~1.579~~ Tons 2.44 Tons		13.5 ~~9.9~~ lbs

Post-development Condition:

Basin Identifier	Land Use	Sediment Rate	Sediment Amount	Phosphorus Rate	Phosphorus Amount
Pond 1	.35 x .06 40% Woodlands	.112 x 0.07	2.6 ~~1.645~~	.1x.35+.9x.65 = .62 x 23.5 0.46	~~10.81~~ 14.6
	60% 2.D.U .65 x .14				
Basin 2	.06x 50% Woodlands	.105 0.065	.26 ~~0.16~~	0.4	1.0
	50% 2.D.U. .15x			.1+.7	
Basin 3	50% Woodlands	.105 0.065	.36 ~~0.221~~	0.4	1.36
	50% 2.D.U.				
Total			3.22 ~~2.026~~ Tons		16.9 ~~13.17~~ lbs

WC005_OUTDOOR_WORLD - 035

IV. RUNOFF AND POLLUTANT MITIGATION AND PERFORMANCE CRITERIA

WC005_OUTDOOR_WORLD - 036

Introduction

Studies in the development of pollution and runoff control practices have addressed various control methodologies for water quality management. The State Water Control Board Best Management Practices Handbook contains a collection of practices that have been determined to have the greatest potential for application in Virginia. These practices deal with aspects of water quality, runoff volume and discharge control. Certain practices rely on physical structures and involve establishment and maintenance of vegetative controls. The practices contained in the BMP Handbook have been divided into three basic categories each representing different control methodologies. Their characteristics are described as follows:

A. Source Controls are nonstructural measures that control nonpoint pollution by reducing the generation and accumulation of potential runoff contaminants at or near their source. Examples are solid waste collections and disposal, fertilizer management activities, street-parking lot sweeping and roadway design utilizing grassed drainage channels.

B. Runoff Controls are multipurpose structural measures that reduce the volume and rate of runoff and associated nonpoint pollutant loading by diverting stormwater to detention storage and the soil profile where pollutant loading by diverting stormwater to detention storage and the soil profile where pollutant removal can occur through natural physical and biological processes. Examples are detention improvements and grassed waterways.

C. Collection and Treatment are structural measures involving area-wide municipal and site specific stormwater collection and treatment applications.

WC005_OUTDOOR_WORLD - 037

In addition to these control categories, minimum statewide standards for erosion and sediment control practices have been established by the Virginia Soil and Water Conservation Commission and are contained in the Virginia Erosion and Sediment Control Handbook. The Handbook contains minimum design criteria, standards, and specifications for thirty-four conservation practices. These practices account for perimeter control, slope protection, sediment trapping, drainageway and stream protection, temporary stabilization, and permanent stabilization. James City County has adopted the minimum statewide standards for compliance of any development related land disturbing activity. Additionally, any such activity cannot commence without an approved erosion and sediment control plan for that activity. The purpose of the plan and control measures is to preclude the transport offsite of all waterborne sediments resulting from construction activities. Appendix B contains specific erosion control measures required by James City County to be noted on all site improvement construction plans requiring a land disturbing permit.

Control Practices

Practices in the described categories, in addition to basic erosion and sediment control, are applicable to the overall Outdoor World Project.

The primary measure for runoff control and pollutant mitigation will be the proposed stormwater detention impoundments. These facilities will provide a highly effective approach to control urban runoff quality while providing flood control by retaining, buffering, and attenuating flows. This is due to the detention of flow long enough for removal of pollutants by physical and/or biological processes occurring.

Characterization of Detention Basins

The mechanisms controlling pollutant removal in detention facilities are complex and numerous. The more significant mechanisms include biological

WC005_OUTDOOR_WORLD - 038

stabilization, settling, artificial drawdown and infiltration. Most of these factors can be related to the concept of detention time. Detention time is the time a parcel of water spends in the basin or pond. The mechanisms controlling pollutant removal, mentioned, are affected by or affect detention time.

Particle settling is affected by detention time as is biological stabilization. Outlet structures can be designed to achieve various detention times by varing stage-discharge relationships based on hydraulic capacities of the outlet structures. Detention time is the primary indicator of pollution control capability. Factors that control this time parameter are outlet structure characteristics and basin geometry. Varying these factors will produce different overall control levels which can be measured directly. To compute detention time and time series runoff response, a computer simulation model is necessary because of its predictive value. It is also a realistic assumption for stormwater detention facilities to experience little or no turbulence. Completely mixed stormwater detention is an anomoly when one considers that a major pollutant removal mechanism is particle settling, therefore detention time is usually computed under steady state condition.

Detention basins utilizing this design concept have been shown to be capable of highly effective performance in urban runoff application. In addition to removal of particulate forms of pollutants by sedimentation, detention basins exhibit substantial reductions in nutrients.

This is attributed to biological processes which are permitted to proceed in the permanent water pool of a wet detention basin. A wet basin is one which maintains a permanent pool level with additional storage capacity for runoff storage during storms. Performance improves with detention basin size relative to contributing catchment area and the magnitude of the runoff processed.

WC005_OUTDOOR_WORLD - 039

The primary design strategy for urban ponds controlling nonpoint source pollution is to maximize the detention time of captured runoff. According to the BMP Handbook, it is believed that basin drawdown times in excess of 30-40 hours will result in significant pollutant removal. It should be noted that if the basin is used to remove pollutants, the water quality within the basin itself will be lowered, thus reducing the applicability for such uses as water supply, recreation and aesthetics. Appendix C contains the design criteria for detention basins as set forth in the design manual for runoff analysis.

Depending of the detention basin design, downstream water quality may be improved for the following reasons:

1. Sediment and particulate pollutants settle out and are trapped.
2. Delayed release of runoff stretches out the loading of the receiving stream and reduces the first flush or shock loading effects by runoff-borne sediments.
3. Decreased runoff release rate reduces stream channel erosion and subsequent sediment pollution.
4. Downstream pollution by litter and debris is reduced to the extent such pollutants are trapped within the impoundment.

Sedimentation Processes

In order to apply sedimentation theory to the stormwater detention impoundments, it is necessary to assure that the facility operates like an idealized continuous flow settling basin in which the following conditions are met: (1) the direction of flow is horizontal and the velocity is uniform in all parts of the settling zone; (2) the concentration of suspended particles of each size is the same at all points in the vertical cross-section at the inlet end of the basin; and (3) a particle is removed when it reaches the bottom of the basin. If all these conditions are satisfied in the detention basin, the theoretical detention time for each

sediment particle entering the basin will be equivalent to the incremental storage volumes divided by the design outflow rates. A discrete particle's ability to settle out in the detention basin depends upon whether or not its settling velocity is high enough to produce deposition within the specified detention time. The smallest velocity which can produce one hundred percent removal in the idealized settling basin with a particular detention time is known as the "design settling velocity" and is equivalent to either the basin's settling zone divided by the detention time or the basin's outflow rate divided by its surface area. Discrete particles with a settling velocity greater than or equal to the design settling velocity will exhibit one hundred percent removal rates while only a portion of the particles with settling velocities less than the design value will be removed based on the proportion removed equivalent to the ratio of the particle's settling velocity to the design settling velocity. Therefore, the critical parameter for characterizing sediment trap efficiency is the particle size associated with the basin's design velocity.

Summary

It is anticipated that a minimum 75% effectiveness for removal of sediment and pollutant loading will be obtained with the detention ponds. The net projected loading would be 0.50 tons per year for sediment and 3.3 lbs. per year for phosphorus. Additional measures shall be employed during the construction phases and final stabilization procedures as previously cited in this report to control erosion and sedimentation.

The detention basins 2 and 3 will be constructed as temporary sediment traps as described in the Virginia Erosion and Sedimentation Control Handbook and James City County Design Criteria and each shall precede the development of its watershed area. It is anticipated that these temporary sediment traps will be turned into permanent stormwater management facilities at the completion of all construction in each section. At that time, the design criteria for the permanent basins shall be established and necessary changes

WC005_OUTDOOR_WORLD - 041

made to upgrade the temporary basins to permanent facilities. Existing Pond #1 will utilize the existing controls that are already in place with the improvements to be made to the outfall discharge area at the receiving stream.

WC005_OUTDOOR_WORLD - 042

REFERENCES:

1. Virginia State Water Control Board, "Best Management Practices Handbook: Urban", Planning Bulletin 321, 1979.

2. Virginia State Water Control Board, "Best Management Practices Handbook: Hydrologic Modifications", Planning Bulletin 319, 1979.

3. Virginia Soil and Water Conservation Commission, "Virginia Erosion and Sediment Control Handbook - Second Edition 1980", Richmond, Virginia.

4. Northern Virginia Planning District Commission, "Guidebook for Screening Urban Nonpoint Pollution Management Strategies", prepared for Metropolitan Washington Council of Governments, Washington, D.C., November 1979.

5. Northern Virginia Planning District Commission, "Washington Metropolitan Area Urban Runoff Demonstration Project", prepared for Department of Enviornmental Programs, Metropolitan Washington Council of Governments, Wasnington, D.C., April 1983.

6. Sartor, J.D., and Boyd, G.B., "Water Pollution Aspects of Street Surface Contaminants", EPA-R2-72-081, U.S. Environmental Protection Agency, Washington, D.C., 1972. NTIS# PB-214-408.

7. U.S. Department of Agriculture Soil Conservation Service In Cooperation with Virginia Polytechnic Institute and State University, "Soil Survey of James City and York Counties and the City of Williamburg Virginia", Issued April 1985.

8. Maryland Association of Soil Conservation Districts, "Storm Water Management Pond Design Mannual", June 1975.

9. U.S. Department of Agriculture Soil Conservation Service, "Urban Hydrology for Small Watersleds", tecnnical release no. 55, January 1975.

10. U.S. Department of Agriculture Soil Conservation Service "A Method for Estimating Volume and Rate of Runoff in Small Watersheds", SCS-TP-149, Revised April 1973.

11 U.S. Environmental Protection Agency, "Results of the Nationwide Urban Runoff Program: Volume 1 - Final Report", Water Planning Division, Washington, D.C., December 1983.

12. U.S. Environmental Protection Agency, "Report to Congress: Nonpoint Source Pollution in the U.S.", Water Planning Division, Washington, D.C., January 1984.

13. Herbert G. Poertner, "Practices in Detention of Urban Stormwater Runoff", Office of Water Resources Research, American Public Works Association, June 1974. NTIS # PB-234-554.

14. Hittman Associates, "Approaches to Stormwater Management", Office of Water Resources Research, American Public Works Association, November 1973. NTIS # PB-228-124.

15. American Society of Civil Engineers, "Management of Urban Storm Runoff", Office of Water Resources Research, American Public Works Association, May 1974. NTIS # PB-234-316.

APPENDIX A

THE DeYOUNG-JOHNSON GROUP, INC.
P. O. Box 197
WILLIAMSBURG, VA 23187
(804) 253-0673

JOB EXISTING STORMWATER POND PROPOSED OUTFLOW CONTROL

SHEET NO. ____ OF ____

CALCULATED BY D.C. DATE ____

CHECKED BY ____ DATE ____

SCALE N.T.S.

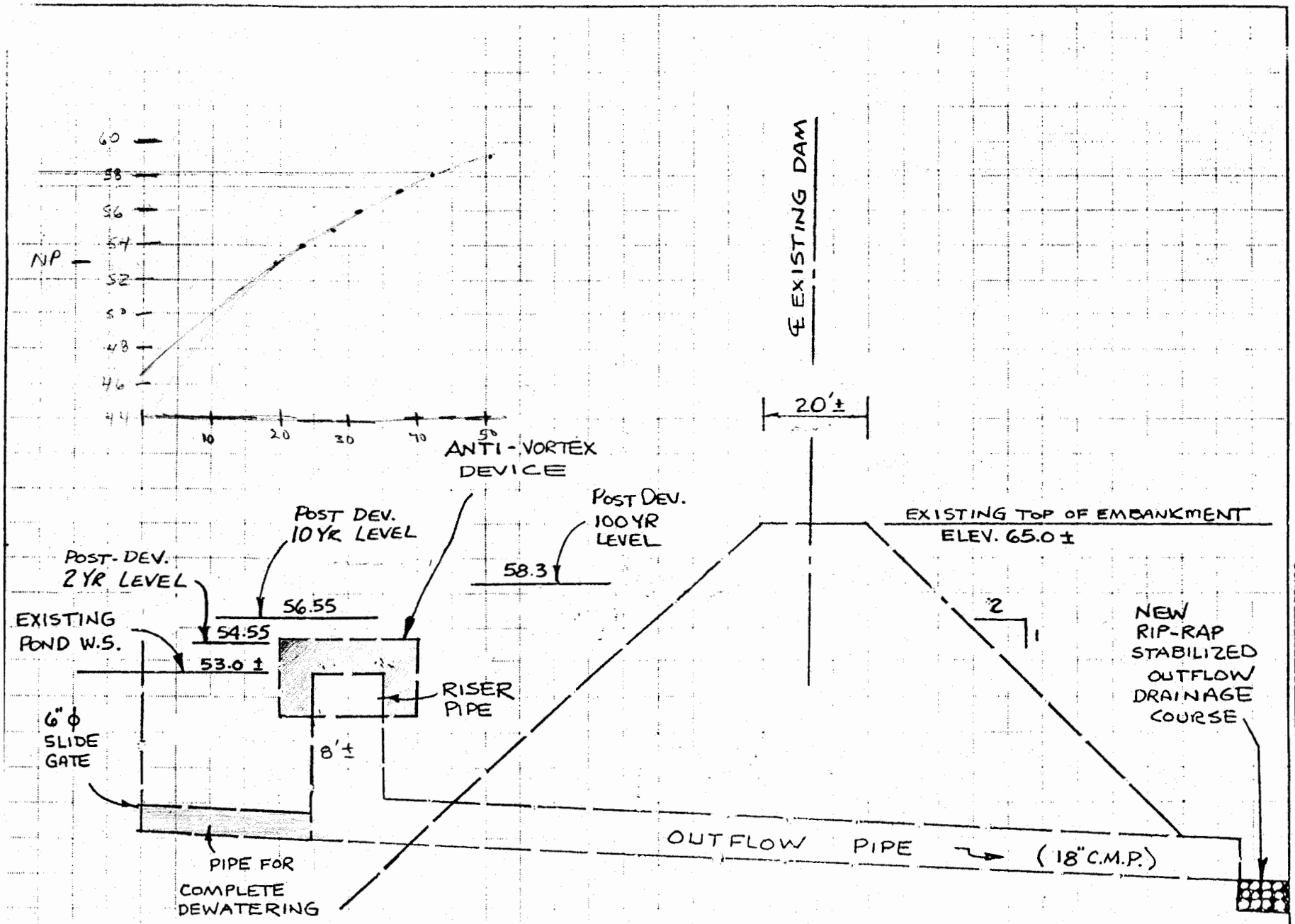

THE DeYOUNG-JOHNSON GROUP, INC.
P. O. Box 197
WILLIAMSBURG, VA 23187
(804) 253-0673

JOB OUTDOOR WORLD - EXIST. POND 1
SHEET NO. ____ OF ____
CALCULATED BY DPC DATE 12-7-88
CHECKED BY ____ DATE ____
SCALE ____

STAGE - STORAGE

	CONTOUR	STAGE	CONTOUR AREA (SF)	STORAGE (CF)	Σ STORAGE (CF)
N.P.	53	0	19400		0
				21300	
	54	1	23200		21300
				25300	
	55	2	27400		46600
				29700	
	56	3	32000		76300
				34500	
	57	4	37000		110800
				39500	
	58	5	42000		150300
				46500	
	59	6	51000		196800

1) need 2560 ft³ of storage under old criteria
2) New criteria - Need 1.4 ac ft of storage - perm pool - if max d = 8' - .4 x 8 x .445 = 1.4

STAGE - DISCHARGE

W.S. ELEV.	STAGE	h*	EXIST. 18" DISCHARGE (CFS)
53	0	5	0
54	1	5	13.4
55	2	5	14.5
56	3	5	15.5
57	4	5	16.4
58	5	5	17.4
59	6	5	18.4

* OUTFALL INVERT TO EXIST WATER SURFACE (APPROXIMATE)
18" CMP CONTROL OUTFALL WITH 27" RISER + ANTI-VORTEX DEVICE

SEE COMPUTER PRINTOUT FOR VARIOUS ROUTINGS

EXISTING POND #1--PRE-DEVELOPMENT

INPUT DESIGN DATA

DESIGN STORM FOR ANALYSIS = 2 YEAR
DRAINAGE AREA (ACRES) = 23.5
AVERAGE SLOPE OF DRAINAGE AREA (%) = 7
HYDRAULIC LENGTH (FT) = 1200
IMPERVIOUS SURFACE (%) = 15
HYDRAULIC LENGTH MODIFIED (%) = 10
COMPOSITE CURVE NUMBER = 71
SLOPE ADJUSTMENT FACTOR = 1.13
PONDING ADJUSTMENT FACTOR = .95

RESULTS OF HYDRAULIC CALCULATIONS
(SCS TR-55 & TP-149 PROCEDURES)

WATERSHED LAG ADJUSTED (IMPER. AREAS & CHAN. IMPROV.) IS .151 HOURS
TIME OF CONCENTRATION ADJUSTED IS .251 HOURS
THE PEAK DISCHARGE FROM THIS WATERSHED IS 28 C.F.S.

INPUT DESIGN DATA

DESIGN STORM FOR ANALYSIS = 10 YEAR
DRAINAGE AREA (ACRES) = 23.5
AVERAGE SLOPE OF DRAINAGE AREA (%) = 7
HYDRAULIC LENGTH (FT) = 1200
IMPERVIOUS SURFACE (%) = 15
HYDRAULIC LENGTH MODIFIED (%) = 10
COMPOSITE CURVE NUMBER = 71
SLOPE ADJUSTMENT FACTOR = 1.13
PONDING ADJUSTMENT FACTOR = .95

RESULTS OF HYDRAULIC CALCULATIONS
(SCS TR-55 & TP-149 PROCEDURES)

WATERSHED LAG ADJUSTED (IMPER. AREAS & CHAN. IMPROV.) IS .151 HOURS
TIME OF CONCENTRATION ADJUSTED IS .251 HOURS
THE PEAK DISCHARGE FROM THIS WATERSHED IS 77 C.F.S.

POST-DEVELOPMENT

OUTDOOR WORLD CAMPGROUND EXISTING POND #1

INPUT DESIGN DATA

DESIGN STORM FOR ANALYSIS = 2 YEAR
DRAINAGE AREA (ACRES) = 23.5
AVERAGE SLOPE OF DRAINAGE AREA (%) = 7
HYDRAULIC LENGTH (FT) = 1200
IMPERVIOUS SURFACE (%) = 20
HYDRAULIC LENGTH MODIFIED (%) = 10
COMPOSITE CURVE NUMBER = 77
SLOPE ADJUSTMENT FACTOR = 1.13
PONDING ADJUSTMENT FACTOR = .95

RESULTS OF HYDRAULIC CALCULATIONS
(SCS TR-55 & TP-149 PROCEDURES)

WATERSHED LAG ADJUSTED (IMPER. AREAS & CHAN. IMPROV.) IS .125 HOURS
TIME OF CONCENTRATION ADJUSTED IS .209 HOURS
THE PEAK DISCHARGE FROM THIS WATERSHED IS 44 C.F.S.

THE FOLLOWING ARE TIME INCREMENTS AND ORDINATES OF THE INFLOW HYDROGRAPH

(HOURS)	(C.F.S.)
0.0	
.05	1.176
.1	4.117
.15	9.998999
.2	17.65
.25	26.731
.3	35.796
.35	43.525
.4	44.446
.45	38.571
.5	26.547
.551	16.288
.601	8.219
.651	2.703
.701	0

STAGE (FT)	DISCHARGE (CFS)	STORAGE (CF)
0	0	0
1	13.4	21300
2	14.5	46600
3	15.5	76300
4	16.4	110800

THE FOLLOWING ARE TIME INCREMENTS AND ORDINATES OF THE OUTFLOW HYDOGRAPH

(HOURS)	(C.F.S.)
0.000	0.063
0.050	0.340
0.100	1.061
0.150	2.430
0.200	4.550
0.250	7.415
0.300	10.874
0.350	13.475
0.400	13.693
0.450	13.841
0.500	13.900
0.551	13.887
0.601	13.821
0.651	13.724
0.701	13.617
0.751	13.510
0.801	13.405
0.851	12.031
0.901	10.741
0.951	9.589
1.001	8.560
1.051	7.642
1.101	6.822
1.151	6.090
1.201	5.437
1.251	4.854
1.301	4.333
1.351	3.868
1.401	3.453
1.451	3.083
1.501	2.752
1.551	2.457
1.602	2.193
1.652	1.958
1.702	1.748
1.752	1.561
1.802	1.393
1.852	1.244
1.902	1.110

MAXIMUM OUTFLOW IS 14 C.F.S.
MAXIMUM STAGE IS 1.545455 FT.
MAXIMUM STORAGE IS 35100 CUBIC FEET

POST DEVELOPMENT

OUTDOOR WORLD CAMPGROUND EXISTING POND #1

INPUT DESIGN DATA

DESIGN STORM FOR ANALYSIS = 10 YEAR
DRAINAGE AREA (ACRES) = 23.5
AVERAGE SLOPE OF DRAINAGE AREA (%) = 7
HYDRAULIC LENGTH (FT) = 1200
IMPERVIOUS SURFACE (%) = 20
HYDRAULIC LENGTH MODIFIED (%) = 10
COMPOSITE CURVE NUMBER = 77
SLOPE ADJUSTMENT FACTOR = 1.13
PONDING ADJUSTMENT FACTOR = .95

RESULTS OF HYDRAULIC CALCULATIONS
(SCS TR-55 & TP-149 PROCEDURES)

WATERSHED LAG ADJUSTED (IMPER. AREAS & CHAN. IMPROV.) IS .125 HOURS
TIME OF CONCENTRATION ADJUSTED IS .209 HOURS
THE PEAK DISCHARGE FROM THIS WATERSHED IS 101 C.F.S.

THE FOLLOWING ARE TIME INCREMENTS AND ORDINATES OF THE INFLOW HYDROGRAPH

HOURS)	(C.F.S.)
0.0	
.05	3.32
.1	11.367
.15	26.832
.2	45.7
.25	66.709
.3	86.152
.35	101.27
.4	100.864
.45	85.961
.5	58.505
.551	35.5
.601	17.725
.651	5.771
.701	0

STAGE (FT)	DISCHARGE (CFS)	STORAGE (CF)
0	0	0
1	13.4	21300
2	14.5	46600
3	15.5	76300
4	16.4	110800

THE FOLLOWING ARE TIME INCREMENTS AND ORDINATES OF THE OUTFLOW HYDOGRAPH

(HOURS)	(C.F.S.)
0.000	0.178
0.050	0.947
0.100	2.894
0.150	6.474
0.200	11.808
0.250	13.788
0.300	14.412
0.350	14.956
0.400	15.430
0.450	15.712
0.500	15.859
0.551	15.910
0.601	15.890
0.651	15.829
0.701	15.755
0.751	15.681
0.801	15.607
0.851	15.534
0.901	15.450
0.951	15.357
1.001	15.264
1.051	15.172
1.101	15.080
1.151	14.989
1.201	14.898
1.251	14.808
1.301	14.718
1.351	14.629
1.401	14.541
1.451	14.439
1.501	14.327
1.551	14.215
1.602	14.104
1.652	13.994
1.702	13.885
1.752	13.776
1.802	13.669
1.852	13.562
1.902	13.456

MAXIMUM OUTFLOW IS 16 C.F.S.
MAXIMUM STAGE IS 3.555556 FT.
MAXIMUM STORAGE IS 95466 CUBIC FEET

POST-DEVELOPMENT

OUTDOOR WORLD CAMPGROUND - EXISTING POND #1

INPUT DESIGN DATA

DESIGN STORM FOR ANALYSIS = 100 YEAR
DRAINAGE AREA (ACRES) = 23.5
AVERAGE SLOPE OF DRAINAGE AREA (%) = 7
HYDRAULIC LENGTH (FT) = 1200
IMPERVIOUS SURFACE (%) = 20
HYDRAULIC LENGTH MODIFIED (%) = 10
COMPOSITE CURVE NUMBER = 77
SLOPE ADJUSTMENT FACTOR = 1.13
PONDING ADJUSTMENT FACTOR = .95

RESULTS OF HYDRAULIC CALCULATIONS
(SCS TR-55 & TP-149 PROCEDURES)

WATERSHED LAG ADJUSTED (IMPER. AREAS & CHAN. IMPROV.) IS .125 HOURS
TIME OF CONCENTRATION ADJUSTED IS .209 HOURS
THE PEAK DISCHARGE FROM THIS WATERSHED IS 163 C.F.S.

THE FOLLOWING ARE TIME INCREMENTS AND ORDINATES OF THE INFLOW HYDROGRAPH

HRS)	(C.F.S.)
0.0	
[illegible]	5.746
	19.512
[illegible]	45.583
	76.59
[illegible]	110.201
	140.258
[illegible]	162.578
	160.203
[illegible]	135.46
	91.734
[illegible]	55.391
[illegible]	27.527
[illegible]	8.923001
[illegible]	0

STAGE (FT)	DISCHARGE (CFS)	STORAGE (CF)
0	0	0
4	16.4	110800
5	17.4	150300
6	18.4	196800

THE FOLLOWING ARE TIME INCREMENTS AND ORDINATES OF THE OUTFLOW HYDOGRAPH

(HOURS)	(C.F.S.)
0.000	0.076
0.050	0.406
0.100	1.252
0.150	2.827
0.200	5.210
0.250	8.369
0.300	12.133
0.350	16.061
0.400	16.941
0.450	17.381
0.500	17.601
0.551	17.693
0.601	17.695
0.651	17.644
0.701	17.576
0.751	17.508
0.801	17.440
0.851	17.368
0.901	17.289
0.951	17.210
1.001	17.132
1.051	17.054
1.101	16.976
1.151	16.899
1.201	16.822
1.251	16.746
1.301	16.670
1.351	16.594
1.401	16.518
1.451	16.443
1.501	16.216
1.551	15.789
1.602	15.374
1.652	14.969
1.702	14.575
1.752	14.191
1.802	13.818
1.852	13.454
1.902	13.100

MAXIMUM OUTFLOW IS 17.7 C.F.S.
MAXIMUM STAGE IS 5.300001 FT.
MAXIMUM STORAGE IS 164250 CUBIC FEET

APPENDIX B

JAMES CITY COUNTY
Erosion and Sediment Control Notes

The purpose of the erosion control measures shown on these plans shall be to preclude the transport of all waterborne sediments resulting from construction activities from entering onto adjacent properties or State waters. If field inspection reveals the inadequacy of the plan to confine sediment to the project site, appropriate modifications will be made to correct any plan deficiencies.

1. All erosion and sediment control measures shall be installed and maintained in accordance with the "Virginia Erosion and Sediment Control Handbook". The contractor shall be thoroughly familiar with all applicable measures contained therein which may be pertinent to this project.

2. All points of construction ingress and egress shall be protected by a temporary construction entrance to prevent tracking of mud onto public right-of-ways. An entrance permit from VDH&T is required prior to any construction activities within State right-of-ways.

3. Sediment basins and traps, perimeter dikes, sediment barriers and other measures intended to trap sediment on-site must be constructed as a first step in grading and be made functional before upslope land disturbance takes place. Earthen structures such as dams, dikes, and diversions must be seeded and mulched within 15 days of installation. An on-site pre-construction meeting will be held between the Department of Public Works and the contractor to identify those measures to be initially installed.

4. Maintenance of all erosion and sediment control measures shall be accomplished in accordance with the "Virginia Erosion and Sediment Control Handbook". Maintenance will include the repair of measures damaged by any subcontractor including those of the public utility companies. At the pre-construction meeting, the contractor will supply Public Works with the name of the individual who will be responsible for ensuring maintenance of installed measures on a daily basis.

5. Surface flows over cut and fill slopes shall be controlled by either redirecting flows from transversing the slopes or by installing mechanical devices to safely lower water downslope without causing erosion. A temporary fill diversion (Std. & Spec. 1.16) shall be installed prior to the end of each working day.

6. Sediment control measures may require minor field adjustments at time of construction to insure their intended purpose is accomplished. Department of Public Works approval will be required for other deviations from the approved plans.

7. The contractor shall strip and pile topsoil at the locations shown on this plan or as directed by the engineer. Silt fence shall be placed at the toe of the stockpile after stripping of topsoil is complete.

8. The contractor shall complete drainage facilities within 30 days following completion of rough grading at any point within the project. The installation of drainage facilities shall take precedence over all underground utilities. Outfall ditches from drainage structures shall be stabilized immediately after construction of same. This includes installation of erosion control stone where required. Any drainage outfalls required for a street must be completed before street grading begins.

9. Permanent or temporary soil stabilization must be applied to all denuded areas within 15 days after final grade is reached on any portion of the site. Soil stabilization must also be applied to denuded areas which may not be at final grade but will remain dormant (undisturbed) for longer than 30 days. Soil stabilization measures include vegetative establishment, mulching and the early application of gravel base material on areas to be paved.

10. No more than 300' of sanitary sewer, storm sewer, or waterlines are to be open at one time. Following installation of any portion of these items, all disturbed areas are to be immediately stabilized (i.e., the same day).

11. If disturbed area stabilization is to be accomplished during the months of December, January, or February, stabilization shall consist of mulching in accordance with Specification 1.75. Seeding will then take place as soon as the season permits.

12. The term Seeding, Final Vegetative Cover or Stabilization, on this plan shall mean the successful germination and establishment of a stable grass cover from a properly prepared seedbed containing the specified amounts of seed, lime, and fertilizer in accordance with Specification 1.66, Permanent Seeding. Irrigation shall be required as necessary to ensure establishment of grass cover.

13. All slopes steeper than 3:1 shall require the use of erosion control blankets such as excelsior blankets to aid in the establishment of a vegetative cover. Installation shall be in accordance with Specification 1.75, Mulching and Manufacturer's Instructions.

14. Inlet protection in accordance with Specification 1.08 shall be provided for all storm drain inlets as soon as practical following construction of same.

15. Temporary liners, such as polyethylene sheets, shall be provided for all paved ditches until the permanent concrete liner is installed.

16. Paved ditches shall be required wherever erosion is evident. Particular attention shall be paid to those areas where grades exceed 3%.

17. Temporary erosion control measures are not to be removed until all disturbed areas are stabilized. After stabilization is complete, all measures shall be removed within 30 days. Trapped sediment shall be spread and seeded.

18. Off-site waste or borrow areas shall be approved by James City County prior to the import of any borrow or export of any waste to or from the project site.

DC/bkh
2480c

APPENDIX C

DETENTION BASINS

Design Criteria: The primary design strategy for this purpose is to maximize the detention time of captured runoff. Detention basins shall have permanent pools with a minimum water storage capacity of 1.0 inch of runoff based upon the impervious areas of the site. This storage would be in addition to the storage volume needed to control the pre-development 2-year storm. Sediment storage shall also be provided. Other design criteria are as follows:

1. A minimum length to width ratio in the pond of at least 2:1 shall be provided.

2. Water tolerant species of vegetative cover for pond surfaces should be provided. These plantings maintain high infiltration rates, break up the soil profile for filtration and aid decomposition of settled particles during the drying cycle, and thus prevent resuspension of settled pollutants. Forage and fodder crops, such as reed canary grass, fescue, perennial rye, orchard grass, and bermuda grass can be used successfully to treat large amounts of runoff, and are tolerant of variations in water quality.

3. At inflow points to the ponds use energy dissipaters, such as rip-rap, to disperse and slow down flow in the upstream end of the basin, thereby promoting settling and minimizing resuspension of settled pollutants. Designers may want to consider channelizing flow from incoming pipes to the upstream end of the pond in order to maximize the travel time through the pond.

4. Outlet controls shall be sized to release water at pre-development or lesser runoff rates, to the permanent poll elevation, based on the 2-year storm. Detention basins shall designed in accordance with Chapter 5, pages 41-50 of the 1980 VIRGINIA EROSION AND SEDIMENT CONTROL HANDBOOK. Drain down times of 30-40 hours are recommended.

5. A concrete pad is recommended at the base of the outlet riser for stability and ease of maintenance.

6. Probable quantities of sediment from the drainage area should be estimated for the expected life of the pond taking into consideration future development trends. The structure should include capacity for sediment storage and provisions for periodic sediment removal if necessary.

7. Provisions should be made for completely draining wet ponds to allow periodic cleaning, inspection and maintenance. Drain facilities may be an integral part of the flow control structure or a separate structure.

8. Ponds which are generally accessible to populated areas should incorporate all possible safety precautions. Steep side slopes at the perimeter should be avoided and dangerous outlet facilities should be protected by enclosure. Warning signs should be utilized wherever appropriate.

9. A permanent easement at least 15 feet in width should be provided around the perimeter of an impoundment to allow for maintenance and to provide a buffer from encroachment. The easement should be measured from the maximum elevation of the storage pool. An easement also must be provided for access to the impoundment location.

10. The water depth at the perimeter of a storage pool should be limited to that which is safe for children. Restruction of access (fence, walls, etc.) may be a consideration if land availability dictates.

11. The side slopes for grassed areas should not be steeper than 1 on 3 to facilitate maintenance and reduce safety hazards.

12. Control devices which are subject to theft or vandalism should be adequately protected.

13. Control and removal of debris both in the storage structure and in all inlet or outlet devices should be a design consideration.

14. Construction specifications should call for quality materials and workmanship to promote the durability and long life of the facility as well as physical appearance.

Maintenance: Maintenance is of primary importance if urban impoundments are to continue to function as originally designed. Following is a list of maintenance considerations:

1. Shoreline deterioration is a major problem of ponds. It can be prevented by proper design and construction. This requires proper bank slopes and may require the use of protective linings such as rip-rap, concrete, etc.

2. Sediment accumulation is another problem affecting detention ponds. Design requires either a programmed sediment removal plan or a design that allows for storage of sediment over the design life of the detention facility.

3. Pipe inlets should be inspected after each storm, and accumulated debris and sediment should be removed.

4. Pipe outlets should be inspected after each storm to determine whether outflow is causing erosion. Wherever such erosion is detected, effective measures should be taken to stabilize and protect the affected area.

5. Trees shall be kept off of the dam and emergency spillway areas. Vegetation should be maintained for critical area stabilization as specified in vegetative practices contained in the 1980 VIRGINIA EROSION AND SEDIMENT CONTROL HANDBOOK.

6. All permanent impoundments should be inspected periodically by qualified persons to insure that they remain structurally sound and mechanically efficient. All impoundments should be inspected following major storms.

Date Record Created: [redacted]

Created By: [redacted]

WS_BMPNO: WC005

Print Form

PRINTED ON:
Friday, March 12, 2010
12:47:46 PM

WATERSHED	WC
BMP ID NO	005
PLAN NO	SP-69-89
TAX PARCEL	(13-4)(1-10)
PIN NO	13401000010
CONSTRUCTION DATE	6/21/1990
PROJECT NAME	Outdoor World Acquisition Corp.
FACILITY LOCATION	4301 Rochambeau Drive
CITY-STATE	Williamsburg, VA
CURRENT OWNER	Outdoor World Acquisition Corp
OWNER ADDRESS	P.O. Box 447
OWNER ADDRESS 2	
CITY-STATE-ZIP CODE	Bushkill, PA 18324
OWNER PHONE	
MAINT AGREEMENT	No
EMERG ACTION PLAN	No

Get Last BMP No

Return to Menu

MAINTENANCE PLAN	No	CTRL STRUC DESC	Riser Pipe
SITE AREA acre	57.4	CTRL STRUC SIZE inches	8
LAND USE	COMM	OTLT BARRL DESC	CMP
old BMP TYP	Dry Pond	OTLT BARRL SIZE inch	18
JCC BMP CODE	F2 Dry ED with forebay		
POINT VALUE	6	EMERG SPILLWAY	No
		DESIGN HW ELEV	58.3
		PERM POOL ELEV	53
SVC DRAIN AREA acres	23.5	2-YR OUTFLOW cfs	44.00
		10-YR OUTFLOW cfs	101.00
		REC DRAWING	No
SERVICE AREA DESCRI	FUTURE DEV. SERVD. BY 2 BASINS		
IMPERV AREA acres		CONSTR CERTIF	No
RECV STREAM	WARE CK. TRIB.		
EXT DET-WQ-CTRL	No	LAST INSP DATE	11/28/2001
WTR QUAL VOL acre-ft	0.8	INTERNAL RATING	2
CHAN PROT CTRL	No	MISC/COMMENTS	
CHAN PROT VOL acre-ft	0		
SW/FLOOD CONTROL	No		
GEOTECH REPORT	No		

Inspected by: [redacted]

Additional Comments: [redacted]