See also WC011

CERTIFICATE OF AUTHENTICITY

THIS IS TO CERTIFY THAT THE FOLLOWING ELECTRONIC RECORDS ARE TRUE AND ACCURATE REPRODUCTIONS OF THE ORIGINAL RECORDS OF JAMES CITY COUNTY GENERAL SERVICES DEPARTMENT- STORMWATER DIVISION; WERE SCANNED IN THE REGULAR COURSE OF BUSINESS PURSUANT TO GUIDELINES ESTABLISHED BY THE LIBRARY OF VIRGINIA AND ARCHIVES; AND HAVE BEEN VERIFIED IN THE CUSTODY OF THE INDIVIDUAL LISTED BELOW.

BMP NUMBER: **WC036**

DATE VERIFIED: **September 14, 2012**

QUALITY ASSURANCE TECHNICIAN: **Leah Hardenbergh**

Leah Hardenbergh

LOCATION: WILLIAMSBURG, VIRGINIA

Stormwater Division

MEMORANDUM

DATE: March 12, 2010

TO: Michael J. Gillis, Virginia Correctional Enterprises Document Management Services

FROM: Jo Anna Ripley, Stormwater

PO: 270712

RE: Files Approved for Scanning

General File ID or BMP ID: WC036

PIN: 0440100020

Subdivision, Tract, Business or Owner Name (if known): Mcdonalds

Property Description: Fast Food Restaurant

Site Address: 9193 Barhamsville Road

(For internal use only) **Box** 20 **Drawer:** 8

Agreements: (in file as of scan date) **N** **Book or Doc#:** **Page:**

Comments
This is a combined file that contains WC011 and WC036

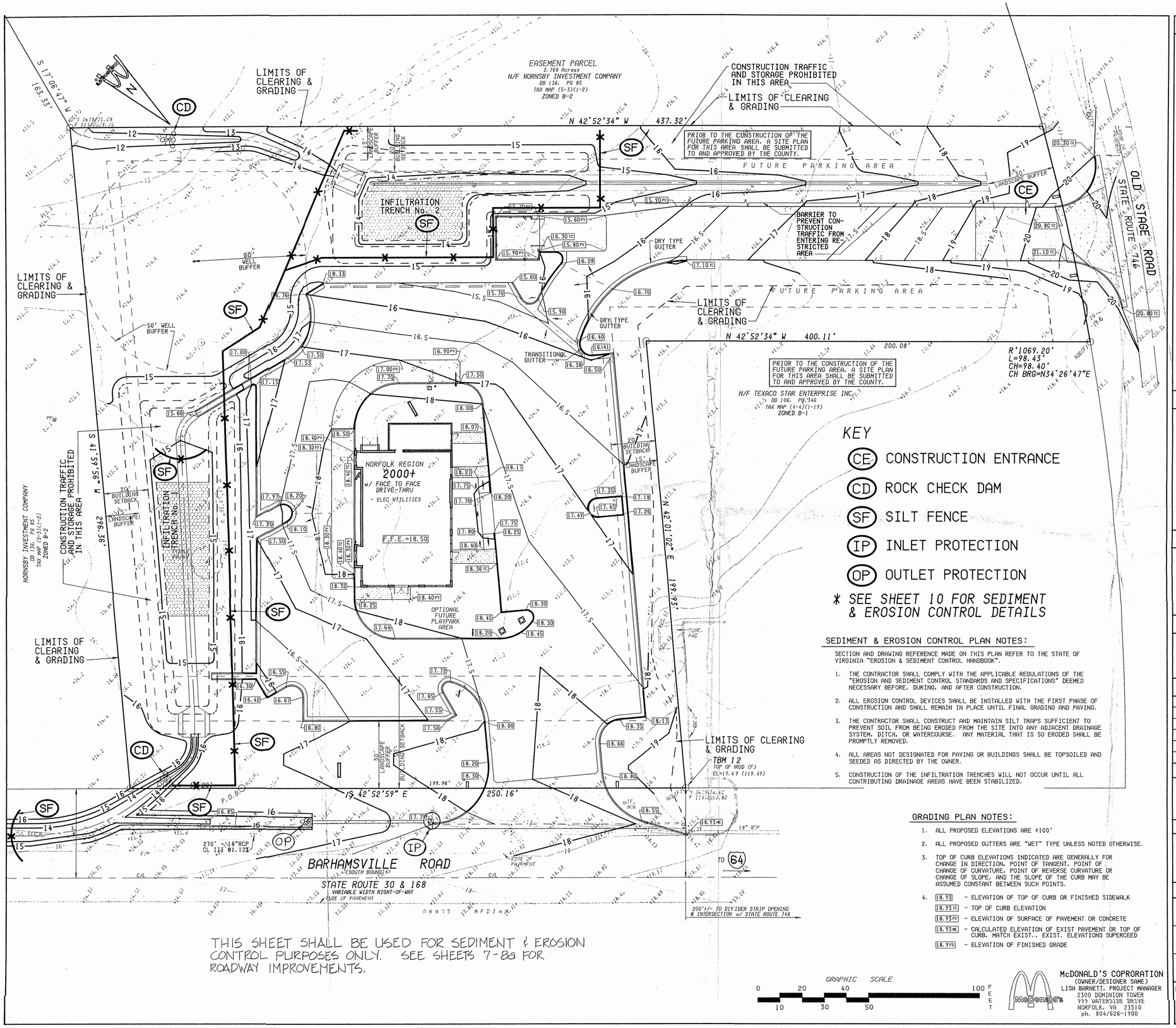

THIS SHEET SHALL BE USED FOR SEDIMENT & EROSION CONTROL PURPOSES ONLY. SEE SHEETS 7-8a FOR ROADWAY IMPROVEMENTS.

SEDIMENT & EROSION CONTROL PLAN NOTES:

SECTION AND DRAWING REFERENCE MADE ON THIS PLAN REFER TO THE STATE OF VIRGINIA "EROSION & SEDIMENT CONTROL HANDBOOK".

1. THE CONTRACTOR SHALL COMPLY WITH THE APPLICABLE REGULATIONS OF THE "EROSION AND SEDIMENT CONTROL STANDARDS AND SPECIFICATIONS" DEEMED NECESSARY BEFORE, DURING, AND AFTER CONSTRUCTION.
2. ALL EROSION CONTROL DEVICES SHALL BE INSTALLED WITH THE FIRST PHASE OF CONSTRUCTION AND SHALL REMAIN IN PLACE UNTIL FINAL GRADING AND PAVING.
3. THE CONTRACTOR SHALL CONSTRUCT AND MAINTAIN SILT TRAPS SUFFICIENT TO PREVENT SOIL FROM BEING ERODED FROM THE SITE INTO ANY ADJACENT DRAINAGE SYSTEM, DITCH, OR WATERCOURSE. ANY MATERIAL THAT IS SO ERODED SHALL BE PROMPTLY REMOVED.
4. ALL AREAS NOT DESIGNATED FOR PAVING OR BUILDINGS SHALL BE TOPSOILED AND SEEDED AS DIRECTED BY THE OWNER.
5. CONSTRUCTION OF THE INFILTRATION TRENCHES WILL NOT OCCUR UNTIL ALL CONTRIBUTING DRAINAGE AREAS HAVE BEEN STABILIZED.

GRADING PLAN NOTES:

1. ALL PROPOSED ELEVATIONS ARE +100'
2. ALL PROPOSED GUTTERS ARE "WET" TYPE UNLESS NOTED OTHERWISE.
3. TOP OF CURB ELEVATIONS INDICATED ARE GENERALLY FOR CHANGE IN DIRECTION, POINT OF TANGENT, POINT OF CHANGE OF CURVATURE, POINT OF REVERSE CURVATURE OR CHANGE OF SLOPE, AND THE SLOPE OF THE CURB MAY BE ASSUMED CONSTANT BETWEEN SUCH POINTS.
4. 18.93 - ELEVATION OF TOP OF CURB OR FINISHED SIDEWALK
   18.93tc - TOP OF CURB ELEVATION
   18.93pv - ELEVATION OF SURFACE OF PAVEMENT OR CONCRETE
   18.93mc - CALCULATED ELEVATION OF EXIST PAVEMENT OR TOP OF CURB, MATCH EXIST., EXIST. ELEVATIONS SUPERCEED
   18.97fg - ELEVATION OF FINISHED GRADE

McDONALD'S CORPORATION
(OWNER/DESIGNER SAME)
LISA BARNETT, PROJECT MANAGER
2300 DOMINION TOWER
999 WATERSIDE DRIVE
NORFOLK, VA 23510
ph. 804/626-1900

GENERAL NOTES

1. McDONALD'S ROAD SIGN AND BASE ARE BY THE SIGN CONTRACTOR. CONDUIT AND WIRING ARE BY THE GENERAL CONTRACTOR.
2. BASES, ANCHOR BOLTS, CONDUIT, AND WIRING FOR ALL OTHER SIGNS ARE BY THE GENERAL CONTRACTER.
3. 3/4" EMPTY CONDUIT TO LOCATIONS SHOWN AT THE LOT PERIMETER FOR LOT LIGHTING IS BY THE GENERAL CONTRACTOR. LIGHTING FIXTURES, BASES, POLES, CONDUIT, AND WIRING ARE BY THE OWNER/OPERATOR.
4. BASES FOR FLAGPOLES ARE BY THE GENERAL CONTRACTOR. ANCHOR BOLTS ARE BY THE FLAGPOLE SUPPLIER.
5. PROPOSED UTILITIES ARE SHOWN IN SCHEMATIC ONLY. EXACT LOCATIONS SHALL BE DETERMINED TO ALLOW FOR THE MOST ECONOMICAL INSTALLATION.
6. THE CONTRACTOR SHALL COORDINATE WITH ALL UTILITY COMPANIES TO DETERMINE EXACT POINT OF SERVICE CONNECTION AT EXISTING UTILITY. REFER TO THE BUILDING ELECTRICAL AND PLUMBING DRAWINGS FOR UTILITY SERVICE ENTRANCE LOCATIONS, SIZES, AND CIRCUITING.
7. ALL ELEVATIONS SHOWN ARE IN REFERENCE TO THE BENCHMARK AND MUST BE VERIFIED BY THE GENERAL CONTRACTOR AT GROUNDBREAK.
8. FINISH WALK AND CURB ELEVATIONS SHALL BE 6" ABOVE FINISH PAVEMENT.
9. ALL LANDSCAPE AREAS SHALL BE ROUGH GRADED TO 6" BELOW TOP OF ALL WALKS AND CURBS. FINISH GRADING, LANDSCAPING, AND SPRINKLER SYSTEMS ARE BY THE OWNER/OPERATOR.
10. LOT LIGHTING CONCRETE FOOTINGS TO CONFORM WITH THE SOILS REPORT RECOMMENDATIONS FOR THIS PARTICULAR SITE.
11. ALL DIMENSIONS ARE TO BACK OF CURB AND ALL PROPOSED SPOT ELEVATIONS ARE FOR TOP OF CURB UNLESS OTHERWISE NOTED.

PAVING SPECIFICATION
(MINIMUM 3" TOTAL COMPACTED ASPHALT THICKNESS)

1" - SM-2A - ASPHALT WEARING SURFACE . . . OVER (or suitable substitutes by local codes)
2" - BM-2 - ASPHALT BINDER COURSE . . . OVER
8" - 21-A COMPACTED STONE BASE . . . OVER
95% STANDARD PROCTOR COMPACTED SUBSOIL BASE

NOTE: McDONALD'S ENGINEER RESERVES THE RIGHT TO REQUEST A COMPACTION TEST AND/OR A CORE SAMPLE. IF TESTS PROVE CORRECT, PER ABOVE SPECIFICATION, TESTS WILL BE AT THE EXPENSE OF McDONALD'S. OTHERWISE, O.C. WILL BE CHARGED.

LOT LIGHTING RECOMMENDATION

1000 Watt HIGH PRESSURE SODIUM VAPOR LIGHT
on ' POLE w/ 2' CONC. BASE
(Mounted Height - ')
SEE SHEET 13, LIGHTING PLAN FOR DETAILS

NOTE: ELECTRICAL CONTRACTOR TO CIRCUIT LOT LIGHTING AS NOTED.

PARKING INFORMATION

TOTAL SPACES							
51	26	SPACES	9'	X	18'	@	60 °
	22	SPACES	9'	X	18'	@	90 °
	3 HANDICAPPED	SPACES	8'	X	18'	@	90 °
		SPACES		X		@	°

UTILITY INFORMATION

	SIZE	TYPE	LOCATION
SANITARY SEWER	* NOT AVAILABLE *		
WATER	* NOT AVAILABLE *		
STORM SEWER		DITCH	ALONG RT 30
ELECTRIC		OH	ALONG RT 746
GAS	* NOT AVAILABLE *		

SURVEY INFORMATION

PREPARED BY: DRAPER ADEN & ASSOC.
4136 Innslake Drive
Glenn Allen, VA 23060
ph: 804/270-7675
DATE: 23AUG91

LEGEND

SANITARY SEWER	—S—	GAS	—G—
WATER	—W—	LOT LIGHT	FT/A
STORM SEWER	—ST—	EXISTING ELEVATION	76.5
ELECTRIC	—E—	PROPOSED ELEVATION	77.0

PLAN SCALE: 1" = 20'

STREET ADDRESS
BARHAMSVILLE RD (VA 30) @ I-64

CITY/COUNTY: JAMES CITY CO. (STONEHOUSE DISTRICT)
STATE: VIRGINIA

DRAWING: SEDIMENT & EROSION CONTROL PLAN

REGIONAL DWG. NO: NSC 91-8
CORPORATE DWG. NO.: 91023X450409NFSP.3PAR

REV	DATE	DESCRIPTION	BY	ISSUE REF
A	17JUN92	REVISED PER COUNTY COMMENTS (15JUN92)	LM	

PLAN APPROVALS

	SIGNATURE (2 REQUIRED)	DATE
REGIONAL MGR.	LEON DICKEY	
CONST. MGR.	DAN BLEVINS	
OPERATIONS DEPT.	JAMES WALLS	
REAL ESTATE DEPT.	BILL SAVAGE	
CONTRACTOR	CO-SIGN SIGNATURES	
OWNER		

STATUS	DATE	BY
PRELIMINARY	26MAR92	LM
PLAN DATE (ISSUE DATE)	02APR92	LM
AS-BUILT	--XXX--	---

SHEET 9

McDonald's®

THESE PLANS AND SPECIFICATIONS ARE THE PROPERTY OF McDONALD'S CORPORATION AND SHALL NOT BE REPRODUCED WITHOUT THEIR WRITTEN PERMISSION.

OFFICE: NORFOLK REGION
ADDRESS: 999 WATERSIDE DRIVE, NORFOLK, VA 23510 ph 804/626-1900

MCD005 (05MAY89)

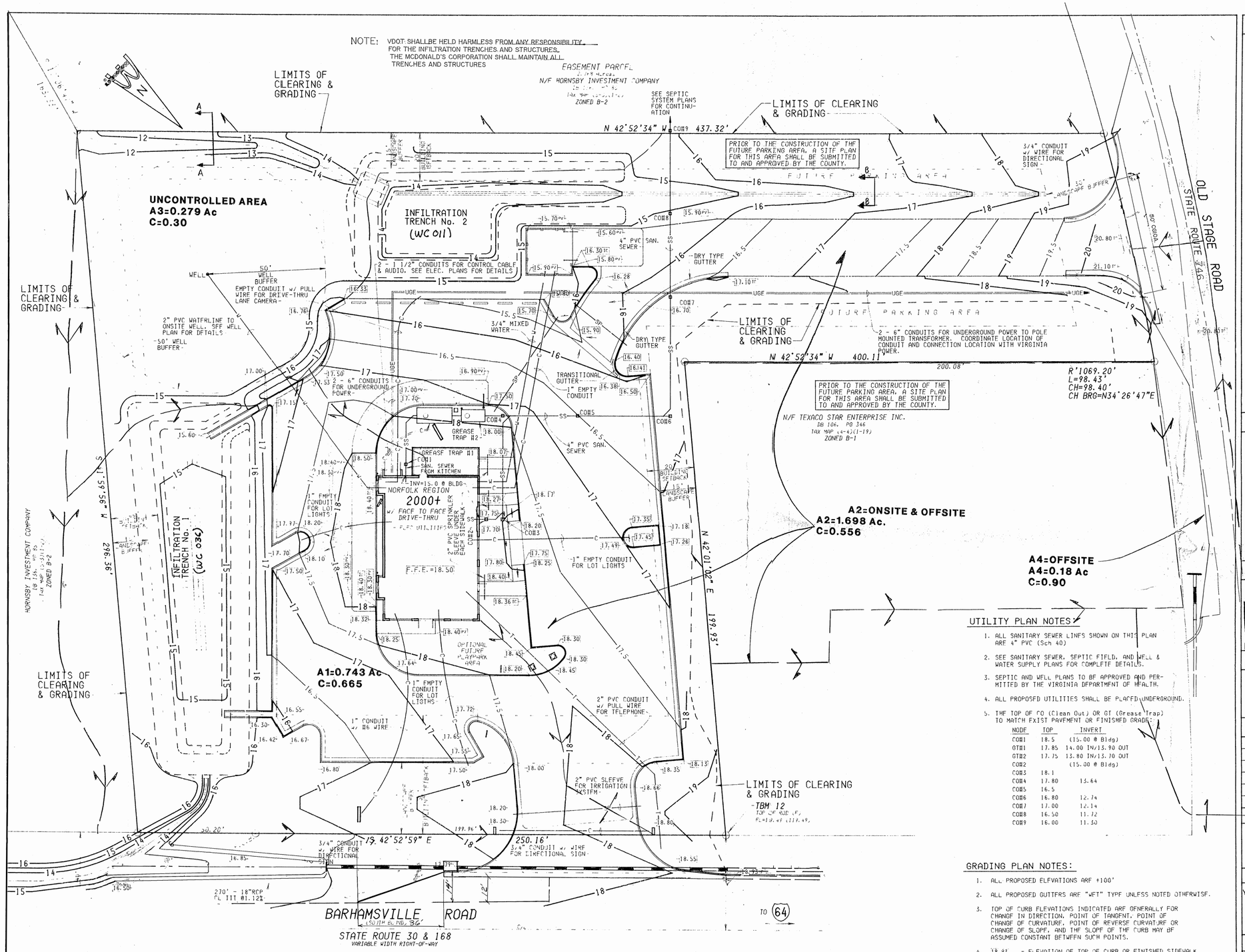

INFILTRATION TRENCH No. ONE

1) TOTAL DRAINAGE AREA SERVED = 0.743 Ac.
2) REQUIRED STORAGE = 2300 C.F./Ac.
3) BMP STORAGE = (0.743) (2300) = 1709 C.F. → UNCONTROLLED AREA ADJUSTMENT
4) UNCONTROLLED ADJUSTMENT = 158
5) VOLUME = (1709 + 158) / 0.4 = 4,668 C.F.
6) TRENCH = 15x60x5.2' = 4680 C.F.

INFILTRATION TRENCH No. TWO

1) TOTAL DRAINAGE AREA = 1.698 Ac.
2) REQUIRED STORAGE = 1650 C.F./Ac.
3) BMP STORAGE = (1.650 x 1.698) + UNCONTROLLED BMP STORAGE = 2801 C.F. + 158 C.F. = 2960 C.F.
4) UNCONTROLLED ADJUSTMENT = 158
5) REQUIRED VOLUME = 2960 ÷ 0.40 = 7399.5
6) TRENCH = 28x45x5.90 = 7434 C.F.

COMMONWEALTH OF VIRGINIA
MARCH 27, 1992
CARL EDWARD DUNCAN
No. 21865
PROFESSIONAL ENGINEER

COMMONWEALTH OF VIRGINIA
MARCH 27, 1992
JAMES W. WHITEHEAD
CERTIFICATE NO. 1438
LAND SURVEYOR B

UTILITY PLAN NOTES:

1. ALL SANITARY SEWER LINES SHOWN ON THIS PLAN ARE 4" PVC (Sch 40)
2. SEE SANITARY SEWER, SEPTIC FIELD, AND WELL & WATER SUPPLY PLANS FOR COMPLETE DETAILS.
3. SEPTIC AND WELL PLANS TO BE APPROVED AND PERMITTED BY THE VIRGINIA DEPARTMENT OF HEALTH.
4. ALL PROPOSED UTILITIES SHALL BE PLACED UNDERGROUND.
5. THE TOP OF CO (Clean Out) OR GI (Grease Trap) TO MATCH EXIST PAVEMENT OR FINISHED GRADE.

NODE	TOP	INVERT
CO#1	18.5	(15.00 @ Bldg)
GT#1	17.85	14.00 IN/13.90 OUT
GT#2	17.75	13.80 IN/13.70 OUT
CO#2		(15.00 @ Bldg)
CO#3	18.1	
CO#4	17.80	13.64
CO#5	16.5	
CO#6	16.80	12.74
CO#7	17.00	12.14
CO#8	16.50	11.72
CO#9	16.00	11.50

GRADING PLAN NOTES:

1. ALL PROPOSED ELEVATIONS ARE +100'
2. ALL PROPOSED GUTTERS ARE "WET" TYPE UNLESS NOTED OTHERWISE.
3. TOP OF CURB ELEVATIONS INDICATED ARE GENERALLY FOR CHANGE IN DIRECTION, POINT OF TANGENT, POINT OF CHANGE OF CURVATURE, POINT OF REVERSE CURVATURE OR CHANGE OF SLOPE, AND THE SLOPE OF THE CURB MAY BE ASSUMED CONSTANT BETWEEN SUCH POINTS.
4. 18.93 - ELEVATION OF TOP OF CURB OR FINISHED SIDEWALK
   18.93T - TOP OF CURB ELEVATION
   18.93P - ELEVATION OF SURFACE OF PAVEMENT OR CONCRETE
   18.93E - CALCULATED ELEVATION OF EXIST PAVEMENT OR TOP OF CURB. MATCH EXIST., EXIST. ELEVATIONS SUPERCEED
   18.93G - ELEVATION OF FINISHED GRADE

McDONALD'S CORPORATION
(OWNER/DESIGNER NAME)
LISA BARNETT, PROJECT MANAGER
(PROJECT MANAGER NAME)
999 WATERSIDE DRIVE
NORFOLK, VA
ph. 804/626-1700

GENERAL NOTES

1. McDONALD'S ROAD SIGN AND BASE ARE BY THE SIGN CONTRACTOR. CONDUIT AND WIRING ARE BY THE GENERAL CONTRACTOR.
2. BASES, ANCHOR BOLTS, CONDUIT, AND WIRING FOR ALL OTHER SIGNS ARE BY THE GENERAL CONTRACTOR.
3. 3/4" EMPTY CONDUIT TO LOCATIONS SHOWN AT THE LOT PERIMETER FOR LOT LIGHTING IS BY THE GENERAL CONTRACTOR. LIGHTING FIXTURES, BASES, POLES, CONDUIT, AND WIRING ARE BY THE OWNER/OPERATOR.
4. BASES FOR FLAGPOLES ARE BY THE GENERAL CONTRACTOR. ANCHOR BOLTS ARE BY THE FLAGPOLE SUPPLIER.
5. PROPOSED UTILITIES ARE SHOWN IN SCHEMATIC ONLY. EXACT LOCATIONS SHALL BE DETERMINED TO ALLOW FOR THE MOST ECONOMICAL INSTALLATION.
6. THE CONTRACTOR SHALL COORDINATE WITH ALL UTILITY COMPANIES TO DETERMINE EXACT POINT OF SERVICE CONNECTION AT EXISTING UTILITY. REFER TO THE BUILDING ELECTRICAL AND PLUMBING DRAWINGS FOR UTILITY SERVICE ENTRANCE LOCATIONS, SIZES, AND CIRCUITING.
7. ALL ELEVATIONS SHOWN ARE IN REFERENCE TO THE BENCHMARK AND MUST BE VERIFIED BY THE GENERAL CONTRACTOR AT GROUNDBREAK.
8. FINISH WALK AND CURB ELEVATIONS SHALL BE 6" ABOVE FINISH PAVEMENT.
9. ALL LANDSCAPE AREAS SHALL BE ROUGH GRADED TO 6" BELOW TOP OF ALL WALKS AND CURBS. FINISH GRADING, LANDSCAPING, AND SPRINKLER SYSTEMS ARE BY THE OWNER/OPERATOR.
10. LOT LIGHTING CONCRETE FOOTINGS TO CONFORM WITH THE SOILS REPORT RECOMMENDATIONS FOR THIS PARTICULAR SITE.
11. ALL DIMENSIONS ARE TO BACK OF CURB AND ALL PROPOSED SPOT ELEVATIONS ARE FOR TOP OF CURB UNLESS OTHERWISE NOTED.

PAVING SPECIFICATION
(MINIMUM 6" TOTAL COMPACTED ASPHALT THICKNESS)

1" - SM-2A - ASPHALT WEARING SURFACE . . . OVER
(or suitable substitutes by local codes)
2" - BM-2 - ASPHALT BINDER COURSE . . . OVER
8" - 21-A COMPACTED STONE BASE . . . OVER
95% STANDARD PROCTOR COMPACTED SUBSOIL BASE

NOTE: McDONALD'S ENGINEER RESERVES THE RIGHT TO REQUEST A COMPACTION TEST AND/OR A CORE SAMPLE. IF TESTS PROVE CORRECT, PER ABOVE SPECIFICATION, TESTS WILL BE AT THE EXPENSE OF McDONALD'S. OTHERWISE, O.T. WILL BE CHARGED.

LOT LIGHTING RECOMMENDATION

1000 Watt HIGH PRESSURE SODIUM VAPOR LIGHT
on ' POLE w/ 2' CONC. BASE
(Mounted Height - ')

SEE LIGHTING PLAN - SHEET 13

NOTE: ELECTRICAL CONTRACTOR TO CIRCUIT LOT LIGHTING AS NOTED.

PARKING INFORMATION

TOTAL SPACES						
51	26	SPACES	9'	x	18'	@ 90°
	22	SPACES	9'	x	18'	@ 90°
	3 HANDICAPPED	SPACES	8'	x	18'	@ 90°
		SPACES		x		@

UTILITY INFORMATION

	SIZE	TYPE	LOCATION
SANITARY SEWER	x NOT AVAILABLE x		
WATER	x NOT AVAILABLE x		
STORM SEWER	DITCH		ALONG RT 30
ELECTRIC	OH		ALONG RT 746
GAS	x NOT AVAILABLE x		

SURVEY INFORMATION

PREPARED BY: DRAPER ADEN & ASSOC.
4136 Innslake Drive
Glenn Allen, VA 23060
ph: 804/270-7675
DATE: 23AUG91

LEGEND

SANITARY SEWER	—S—	GAS	—G—
WATER	—W—	LOT LIGHT	FT/A
STORM SEWER	—ST—	EXISTING ELEVATION	
ELECTRIC	—E—	PROPOSED ELEVATION	77.0

PLAN SCALE: 1" = 20'

STREET ADDRESS
BARHAMSVILLE RD (VA 30) @ I-64

CITY/COUNTY: JAMES CITY CO. (NAME OF LOCALITY)
STATE: VIRGINIA

STORMWATER MANAGEMENT AND GRADING & UTILITIES PLAN

REGIONAL DWG. NO: NSC 91-8
CORPORATE DWG. NO.

REV	DATE	DESCRIPTION	BY	ISSUE REF
A	18JUN92	REV. PER COUNTY & VDOT COMMENTS (15JUN92)	LM	45-0409

McDonald's
THESE PLANS AND SPECIFICATIONS ARE THE PROPERTY OF McDONALD'S CORPORATION AND SHALL NOT BE REPRODUCED WITHOUT THEIR WRITTEN PERMISSION.
NORFOLK REGION
OFFICE ADDRESS: 999 WATERSIDE DRIVE, NORFOLK, VA 23510 ph 804/626-1700

PLAN APPROVALS	SIGNATURE (2 REQUIRED)	DATE
REGIONAL MGR.		
CONST. MGR.		
OPERATIONS DEPT.		
REAL ESTATE DEPT.		
CONTRACTOR	CO-SIGN SIGNATURES	
OWNER		

STATUS	DATE	BY
PRELIMINARY	11MAR92	LM
PLAN DATE (ISSUE DATE)	18MAR92	LM
AS-BUILT		

SHEET 6

WC036_MCDONALDS_TOANO - 004

WC 011 + WC 036

MCD005 (05MAY89)

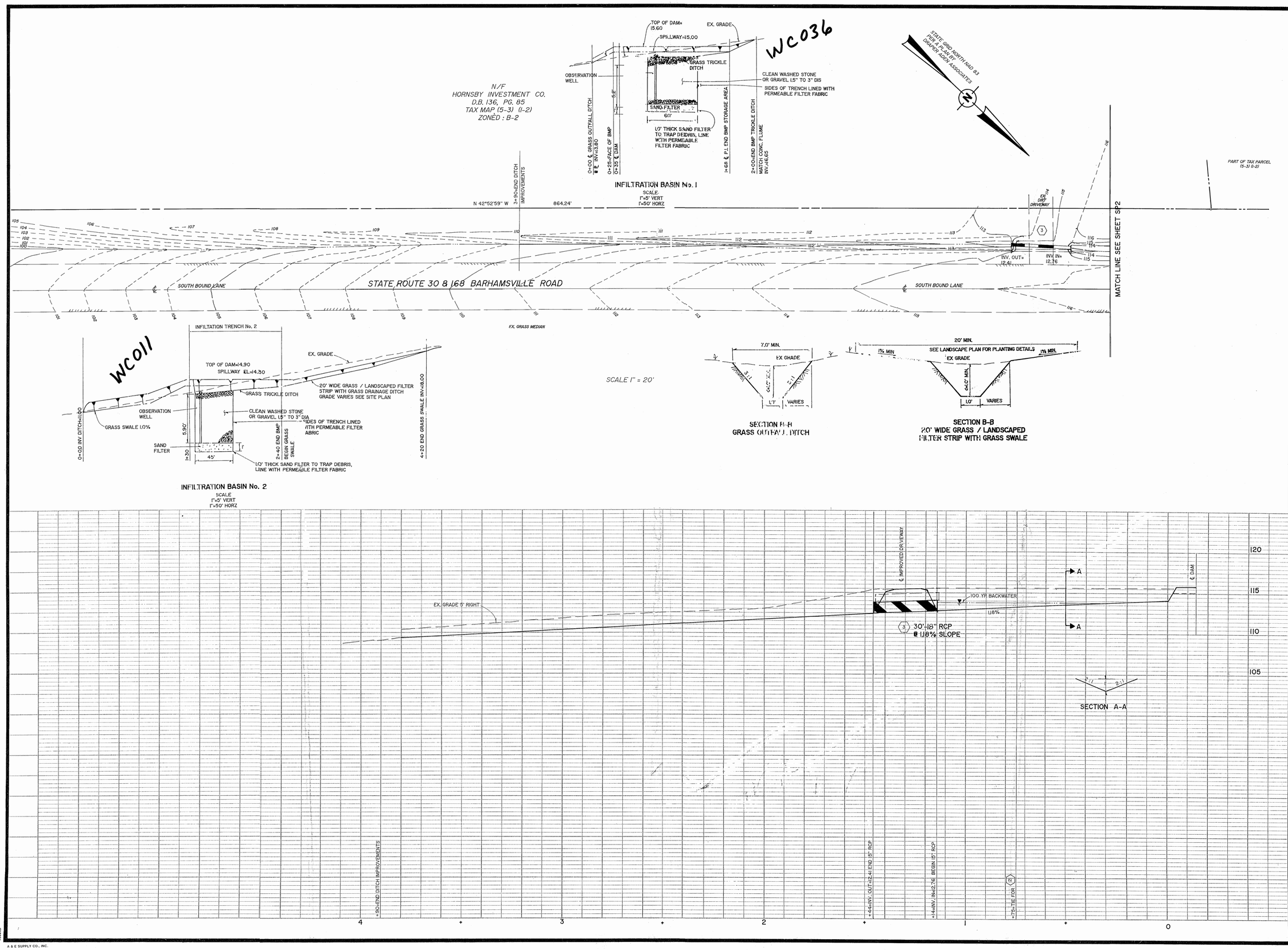

Baker

Michael Baker Jr., Inc.

Ratcliffe Bldg., Suite 212
1602 Rolling Hills Drive
Richmond, Virginia 23229
(804) 282-1621 FAX (804) 285-8530

STORM DRAINAGE PLAN & PROFILE

JAMES CITY COUNTY, VIRGINIA

COMMONWEALTH OF VIRGINIA
MARCH 27, 1992
CARL EDWARD DUNCAN
No. 21865
PROFESSIONAL ENGINEER

COMMONWEALTH OF VIRGINIA
MARCH 27, 1992
JAMES W. WHITEHEAD
CERTIFICATE NO. 1438
LAND SURVEYOR

No.	Date	Revisions

Date: MARCH 26, 1992
Scale: VERT 1"=5' HORZ 1"=20'
Design: C.E.D.
Check: J. WHITEHEAD
Drawn: STAFF
Check: J. WHITEHEAD
S.O. No.: 18788
Sheet 7

File No.: 92-003-A

A & E SUPPLY CO., INC.

WC036_MCDONALDS_TOANO - 005

Lisa Bagnett -
626-1900

STORMWATER MANAGEMENT
&
STORM DRAINAGE CALCULATIONS

MARCH 26, 1992

S.O.# 18788-01-AAA

FOR

WC017

TOANO SITE

Prepared for
McDonalds Corporation
999 Waterside Drive
Norfolk, Virginia 23510
Phone: (804) 626-1900
Contract: Dan Blevins

Submitted to:
James City County Department of Public Works
Attention: Wayland Bass

Stonehouse District
James City County, Virginia

Prepared by
James W. Whitehead, LS3B
Carl E. Duncan, P. E.

Jim - Designer

COMMONWEALTH OF VIRGINIA
CARL EDWARD DUNCAN
No. 21865
3/27/92
PROFESSIONAL ENGINEER

COMMONWEALTH OF VIRGINIA
JAMES W. WHITEHEAD
CERTIFICATE NO. 1438 B
3/27/92
LAND SURVEYOR B

Prepared By
Baker
Michael Baker Jr., Inc.
RICHMOND, VA

TABLE OF CONTENTS

DESCRIPTION		PAGE
1.0	STORMWATER MANAGEMENT	1
2.0	BMP FACILITY WORKSHEET	3
3.0	STORMWATER RUNOFF COMPUTATIONS	8
4.0	CONSTRUCTION SPECIFICATIONS	12
5.0	APPENDIX 1: STORM DRAINAGE CALCULATIONS	16
6.0	SOILS	17

TOANO SITE
1.0 STORMWATER MANAGEMENT DESIGN

I. Total Area of Parcels

Parcel 1	99.58	sq. ft. or	0.914 ac.	(McDonalds)
Parcel 2	131.66	sq. ft. or	1.209 ac.	(McDonalds)
Parcel 3	102.039	sq. ft. or	0.937 ac.	(Texaco Site)
			3.06 ac.	
Offsite Drainage to Trenches (seller)			0.10	(along south property line)
			3.16 ac.	

II. Analysis of Parcels/Drainage to Trenches

DESCRIPTION	OFFSITE CONTROLLED	TRENCH 1	TRENCH 2	UNCONTROLLED
Parcel 1				
a) Paved Area	178 12894	0.004 0.296	0.132 0.106 0.257	0.004 (2) 4617 11195
b) Building	2400	0.055	0.000	
c) Paving/Walks	1481	0.034	0.071	3092
d) Landscaped Area		0.018 0.009 0.005	0.22	0.009 (Parcel 1) 0.275 (Parcel 2)
e) Crop Land	0.091	0.091	0.00	0.009
f) Trench Area		0.124	0.096	
g) Heavily Landscaped		0.047 0.060	0.258	0.046
h) Offsite Grassed	0.558		0.558	0.380
TOTAL ACREAGE	0.649	0.743 ac	1.698 ac.	0.723 ac.

Total McDonalds Site = 2.123 Ac. $I_o = \frac{0.389}{0.652}$ $I_o = \frac{0.566}{1.14}$
Controlled Runoff = 2.441 Ac.

I_o = 59.7% I_o = 0.496

49.6%

Onsite Uncontrolled. runoff = 0.343 = 11%
Onsite Controlled runoff = 2.717 = 89%

$I = 41,600\ ft^3$

.955 = 41,560 ft³

1481
2500
34630
38,611 ft³
4617
43,328

III.

A 2.12 acre lot consisting to two parcels to be developed by McDonalds Corporation are located in a 3.06 acre on-site watershed. The on-site area is 3.06 ac with 2.441 ac of drainage to the trench. The project is in a water supply overlay district and is zoned for commercial use. The project is planned for 1,481 sq. ft. of walks and a 2,500 sq. ft. building with a 34,630 sq. ft. parking Lot. This includes a 4,617 sq. ft. entrance road; the remainder of the 2.12 acre site is considered open space. It has been decided to use two infiltration basins. One infiltration trench will control the entire building for a total of 0.743 acre of the site. The other trench will serve the remainder of the parking lot including 1.698 acre of the project. The 0.106 acre entrance road will be drained by a grass swale to infiltration basin #2. Develop a BMP system for the site is as follows:

? eff I - by trenches
2.12
-.25 (well site)
1.87

$\frac{.955}{1.87} = .51$

Imperviousness for entire site = $\frac{0.389 + 0.566 + 0.00}{3.06}$ = 31.2%

$\frac{.955}{2.12} = 0.45 \Rightarrow 45\%$

Trench 1 Comp C				Trench 2 Comp C		
DESCRIPTION	**Ac. A**	**C**	**AC**	**A**	**C**	**AC**
Paved Area	0.300	0.95	0.285	0.495	0.95	0.470
Buildings	0.055	1.00	0.055	0	0	0
Pavers, Walks, Plaza	0.034	0.70	0.024	0.071	0.70	0.050
Landscaped	0.032	0.55	0.018	0.22	0.55	0.121
Heavily Landscaped	0.107	0.40	0.042	0.258	0.40	0.103
Trench	0.124	0.35	0.043	0.096	0.35	0.034
Subtotal	**0.652**		**0.467**	**1.14**		**0.778**

$C_1 = \frac{0.467}{0.652} = 0.716$ $C_2 = \frac{0.778}{1.14} = 0.68$

In order to provide the necessary BMP facility, we propose two (2) separate BMP, infiltration trench designs. Each BMP Trench will be within an earth dam containment structure designed to retain the 2-year storm over the trench. The perculation rate of the soil; 31-B, Suffolk fine sandy loam (2 to 6 percent), is 3.5 inches to 4.5 inches per hour. The design is based on a rate of 3.5 inches/hour. The trench will discharge into the soil substratum, a 64 inch to 72 inch deep brown loamy sand. See the Soil Survey of James City and York Counties and the City of Williamsburg, Virginia.

Sed Loading Post = 0.16 tons/ac/yr × 2000 = 320 lbs × 2.1 = 672 lbs w/ BMP - 67
Submit results of soils test -

Sed Load Pre = .01 × 2.1 + .091 × 0.6 = .076 × 151
+ .56 × .01 = .006 × 2000 = 11

Phos Ldg Post 2.1 × 1.2 + .34 × .1 = 2.55
Pre - .1 × 2.1 = .2 2.35 × .1 + .09 × .9 = .316
+ .091 × .9 .08
.28
.34 × .1

2.0 BMP FACILITY DESIGN WORKSHEET - INFILTRATION TRENCH

Step 1. Determine the required BMP storage volume for the site.

A) Site area draining into the Watershed 3.06 acres

B) Imperviousness of area in Step 1A:

% Impervious = 59.7 %
or, C value = 0.716

(Show computations for obtaining weighted values.)

.389 x 1"/12 x 43,560 ft² = 1412 ft³

C) Chart A value = 2,250 cf/acre

.566 x 1"/12 x 43560 = 2055

D) Total required BMP storage for the site (A x C) 3467 ft³
(3.06 x 2,250) = 6,885 cf

E) Perculation rate 3.5 inches/hr.

TRENCH 1 and TRENCH 2

Step 2. Determine the required BMP storage for the proposed facility

	Trench 1	Trench 2
A) Onsite area (and offsite area if credit is to be taken) draining to the proposed facility.	0.743 acs.	1.698 acs.
B) Imperviousness of area in Step 2A: % Impervious =	52.3 %	33.33 %
or, C value =	0.665 cf	0.556 cf

$C_1 = \frac{0.494}{0.743} = 66.5$ $C_2 = \frac{0.945}{1.698} = 0.556$

C = 0

(Show computations for obtaining weighted values.)

C) Chart A value =	2,300 cf/ac.	1,650 cf/ac.

D) Total BMP storage required for this proposed
BMP facility (A x C) = (0.743) (2,300) = 1,709 cf* Trench #1
BMP facility (A x C) = (1.698) (1,650) = 2,801 cf* Trench #2 ← min = 2055 ft³

Step 3. Check uncontrolled areas.

A) In the uncontrolled portions of the site, measure the open areas and any impervious areas that drain by sheet flow over an open area. 0.279 acres

B) Divide (A) by 2 0.140 acres

C) Multiply (B) by the answer from 1(C) = (0.14 x 2,250) = 315 cf or 157.5 CF/Trench

Step 4. Check site coverage.

A) Total BMP volume provided: min : 3467 ft³
Add sum of Steps 2(D) to 3(C): 1709 + 2801 + 315 = 4,825 cf

B) Percentage of storage volume provided:
Divide 4(A) by 1 (D). 4825/6885 = 70.08 %

C) Compare 4(B) to 70%

Design is acceptable if 4(B) 70.08 % > 70% OK
Design is unacceptable if 4(B) _____ % < 70%

If offsite credit is not to be taken:

D) Total equivalent controlled area:

Add sum of Steps 2(A) and 3(B) _____ + _____ + _____ = _____ acres

E) Percentage of site area that is controlled:

Divide 4(D) 1(A) _____ %

F) Compare 4(E) to 70%

Design is acceptable if 4 (E) _____ % > 70% OK
Design is unacceptable if 4 (E) _____ % < 70%

Step 5. Impervious acres served

A) Measure total impervious acre (including offsite area if credit is to be taken

0.743 + 1.698 + 0.343 = 2.784 acres

B) Measure controlled impervious area (including offsite area if credit is to be taken.)

0.743 + 1.698 = 2.441 acres

C) Measure onsite uncontrolled impervious areas that drain over open space 0.279 acres

D) Divide (C) by 2 0.140 acres

E) Add (B) to (D) then divide (A) (2.441 + 0.14)/2.784 = 92.71 %

F) Compare 5(E) to 90%

CHART A

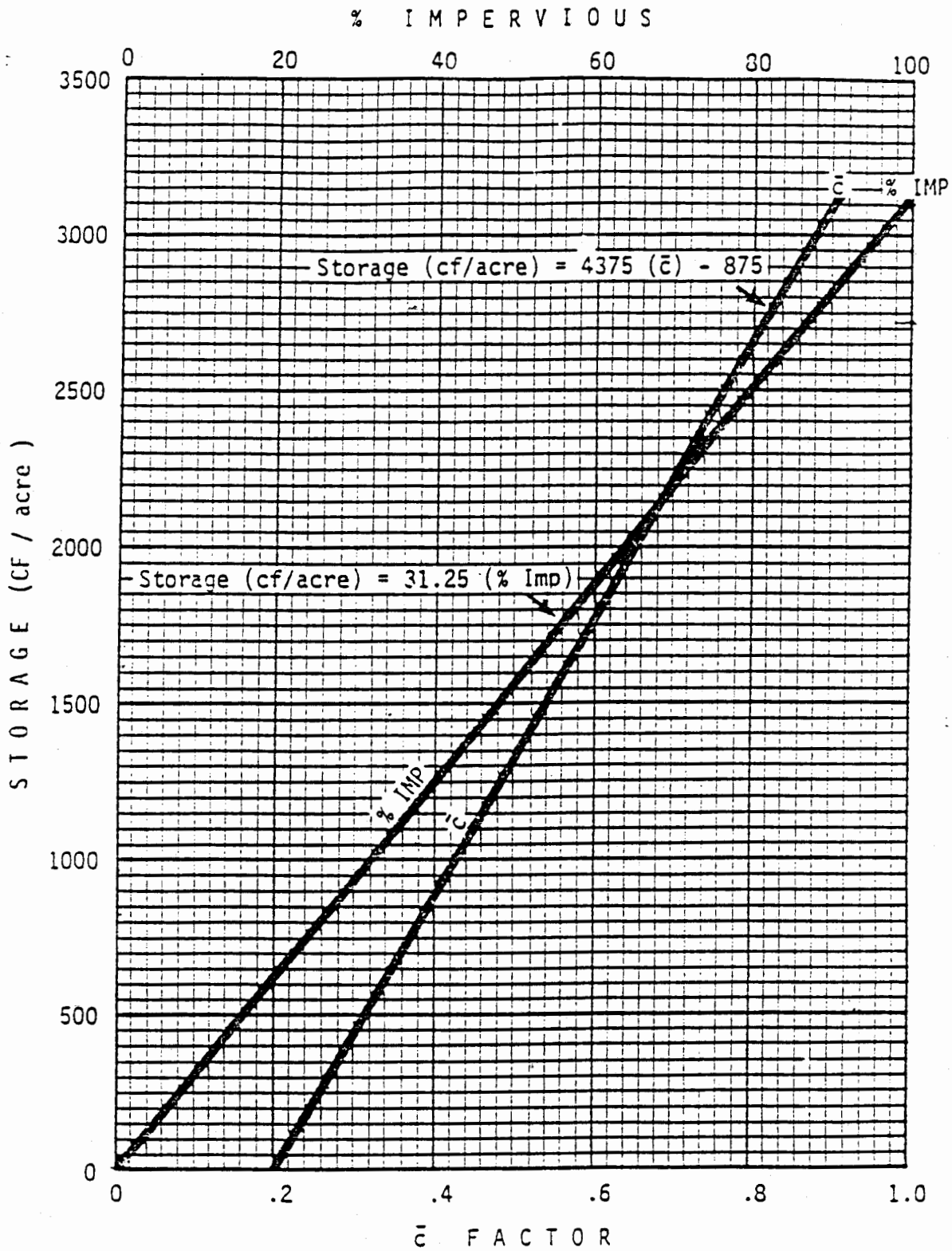

(Source: NVPDC November 1979)

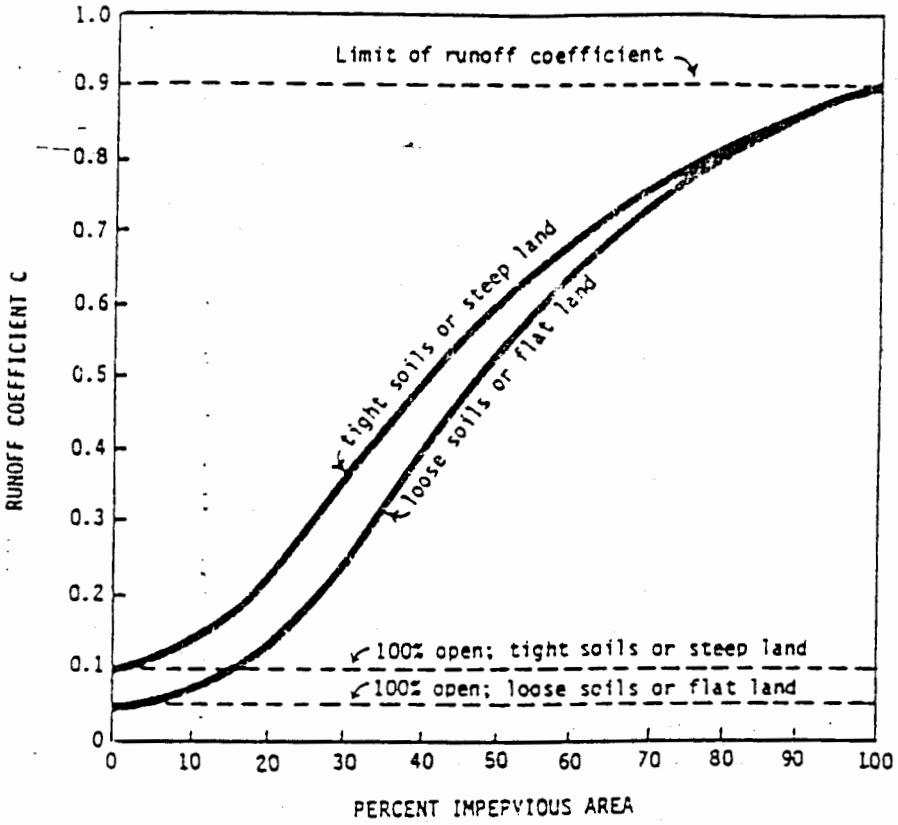

Determination of Runoff Coefficient from Land Use Cover

(Source: US EPA, 1976)

Design is acceptable if 5 (E) 92.71 % > 90%
Uncontrolled impervious area should be reduced if 5 (E) N/A % < 90%

Step 6. Summary: Trench #1 & 2 will discharge into the 64 inch to 72 inch deep substratum soil, a brown, loamy sand.

TRENCH NO. 1	TRENCH NO. 2
1. Drainage area served 0.743 ac	1.698 ac.
2. Required Storage from Chart A 2300 CF/ac	1650 CF/ac
3. BMP Storage = (0.743)(2300) + 158 = 1867 CF	2960 = (1.698)(1650)+158
4. Volume Storage = $\frac{1867}{0.40}$ = 4668 CF	= $\frac{2960}{0.40}$ = 7400 CF
5. Trench dimensions = 60 X 15 X 5.2 = 4680 CF	45' X 28' X 5.90 = 7434 CF

.11 ac/ft .17 ac/ft

PHOSPHORUS REMOVAL WORKSHEET

1. Area of site (including offsite area if offsite credit is to be taken) (a) 2.591 acres

TRENCHES 1 AND 2

2. A) Area draining to BMP (including offsite area if offsite credit is to be taken) 0.743 + 1.698 (b) 2.44 acres
[(b)/(a)] * 100% = $\frac{2.44}{2.591}$ * (100%) = 94.17% (c) 94.17 % of site

B) Phosphorus removal efficiency of a trench is (x) 50% **
or,
[(C%)/(100%)]* (x%) = (d) %

$\frac{94.7}{100}$* 50% = 47.3% phosphorus removed

OPEN SPACE

3. A) Measure all open space and any uncontrolled impervious areas that drain by sheet flow over open space (including offsite are if offsite credit is to be taken)

(b) 0.279 acres
[(b)/(a)] * 100% = $\frac{0.279}{2.591}$ * (100%) = 10.77% (c) 10.8 % of site

B) Phosphorus removal efficiency of open space is 90 **%
or
[(c%)/(100%)] * (90%) = (d) %
10.8 * 90% = 9.72 % phosphorus removed

100

4. A) Determine total % phosphorus removed for the site:

Sum all (d) values: 47.3 + 9.72 = 57.02%

B) Compare 4 (A) to 50%

Design is acceptable if 4 (A) 57.02 > 50 % OK

Phosphorus removal from the site must be increased if 4 (A) N/A < 50%.

TABLE 3

WORKSHEET FOR BMP POINT SYSTEM

A. STRUCTURAL BMP POINT ALLOCATION SITE AREA = 3.06 AC.

BMP	BMP POINTS	FRACTION OF SITE SERVED BY BMP	WEIGHTED BMP POINTS
2.717 Ac. 3.06 Ac. Infiltration Basin	8	x 89%	= 7.12
2.44 Ac. Offsite Waters	8	x 79%	= 6.32
Total Weighted Structural BMP Points:			**13.44**

B. NATURAL OPEN SPACE CREDIT

FRACTION OF SITE	NATURAL OPEN SPACE CREDIT	POINTS FOR NATURAL OPEN SPACE
0	x 0 (0.1 per 1%)	= 0

C. TOTAL WEIGHTED POINTS

13.44 Structural BMP Points	+ 0 Natural Open Space Points	= 13.44 Total

site = 2.123 ac -

10 Point BMP- Controls - $\frac{2.12 - .28}{2.12}$ = 87% x 10 = 8.7

offsite credit = $\frac{.65}{2.12}$ = .307 x 10 = 3.1

11.8

Trench 1

3240 ft³

for 2 yr storm

Trench 2

7720 ft³

WC036_MCDONALDS_TOANO - 016

3.0 STORMWATER RUNOFF COMPUTATIONS

2 YEAR STORM ROUTING

25 YEAR STORM ROUTING

WC036_MCDONALDS_TOANO - 017

TOANO SITE
STORMWATER INFILTRATION DESIGN

1. Area = 2.12 Ac.

2. Area Analysis

Description	Area	C	Ac
1. Building	0.057	1.0	0.057
2. Paving	0.888	0.95	0.844
3. Lawn	0.587	0.55	0.323
4. Heavily landscaped	0.587	0.45	0.264
5. Total	2.12		1.488

$\bar{C} = \frac{1.488}{2.12} = 0.7018$ Use C - 0.70

3. Time of Concentration

a. Predeveloped from chart 1-13E/VDOT

L = 450', character of ground = dense grass .25

Slope = 118.7 - 111.7 = 7' ÷ 450 = 1.56% Ave.

T_c = 27± min.

From Chart 1-14, VDOT T_c = 4.1 x 4 = 16.0

Use T_c = 25 min. C = 0.30 Use Tc = 25 min.

Allowable Release Rate = 0.30 x 2.12 x 3.0 = 1.86 cfs.

b. Post Development T_c = 5.0 min. C - 0.70

Peak inflow = CIA = 0.70 x 5.45 x 2.12 = 8.09 cfs.

4. 2 Yr. Storm Given: A = 2.12ac A = 2.12ac
C = 0.30 pre C = 0.70 post
Tc = 2.5 min pre Tc = 5.0 min post

Va. 2 Yr. Quantity/Infl. in Resv. Overlay Distr. 60% Imp. Cover Limit Reserve Drain Site.

2 YEAR STORM							
C = 0.30 a) Pre-dev. Tc = 25				C = 0.70 b) Post dev. Tc = 5			
Time	Ac	I_2	Q_2	Time	Ac	I_2	Q_2
0	0.636			0	1.484		
5		0.95	0.60	5		5.45	8.09
10		1.80	1.14	10		3.51	5.21
15		2.45	1.56	15		2.60	3.86
20		2.88	1.83	20		2.08	3.09
25		3.00	1.91	25		1.72	2.56
30		2.92	1.86	30		1.46	2.17
35		2.51	1.60	35		1.28	1.90
40		2.01	1.28	40		1.10	1.63
45		1.54	0.98	45		1.00	
50		1.19	0.75	50		0.89	
55		0.97	.62	55		0.82	
60		0.84	0.53	60		0.74	
65		0.77	0.49	65		0.68	
70		0.70	0.44	70		0.62	
75		0.63		75		0.56	
80		0.56		80		0.49	
85		0.49		85		0.43	
90		0.42		90		0.37	
95		0.35		95		0.31	
100		0.28		100		0.25	
105		0.21		105		0.19	
110		0.14		110		0.12	
115		0.07		115		0.06	
120		0.00		120		0.00	

Need to store ~~5530~~ 6640 ft^3 to control 2 yr storm for entire site

Q_{pre} = 0.76

1790 ft^3 for trench 1

5060 ft^3 for trench 2

for

5. 25 Yr. Storm Given: A = 2.12ac C = 0.30 pre Tc = 2.5 min pre | A = 2.12ac C = 0.70 post Tc = 5.0 min post

Predevelopment				25 YEAR STORM			Postdevelopment
25 Yr. Pre C - 0.30 Tc - 25 Min.				25 Yr. C = 0.70 T = 5.0 Min.			
Time	Ac	I_{25}	Q_{25}	Time	Ac	I_{25}	Q_{25}
0	0.636			0	1.484		
5		1.16	0.74	5		8.0	11.87
10		2.35	1.49	10		5.35	7.94
15		3.46	2.20	15		3.95	5.86
20		4.31	2.74	20		3.15	4.67
25		4.90	3.12	25		2.62	3.89
30		4.39	2.79	30		2.23	3.30
35		3.60	2.29	35		1.93	2.86
40		2.77	1.76	40		1.70	2.52
45		2.14	1.36	45		1.53	2.27
50		1.73	1.10	50		1.38	2.05
55		1.48	0.94	55		1.26	1.87
60		1.33	0.85	60		1.16	1.72

4.0 CONSTRUCTION SPECIFICATIONS

Construction Specifications

1. Before any of the development site is graded, the area planned for the trench should be roped off to prevent heavy equipment from compacting the underlying soils.

2. Diversion berms should be placed around the perimeter of the trench during all phases of construction. Sediment and erosion control plans for the site should be oriented to keep sediment and runoff completely away from the trench area. Actual construction of the trench should not begin until after the site is completely stabilized.

3. The trench should be excavated using a backhoe or trencher equipped with tracts or over-sized tires. Normal rubber tires should be avoided since they compact the subsoil and may reduce infiltration capability. For the same reason, the use of bulldozers or front-end loaders should be avoided. Excavated material should be stored at least 10 feet from the trench to avoid backsliding and cave-ins.

4. Once the trench is excavated, the bottom and sides of the stone reservoir should be lined with filter fabric to prevent upward piping of underlying soils. The fabric should be placed flush with the sides and bottom with a generous overlap at the seams. Care should be taken in selecting the proper kind of filter fabric, as available brands differ significantly in their permeability and strength. A partial list of approved filter fabric brands is shown in Table 1.0. If desired, a six inch deep filter of clean, washed sand may be substituted for filter fabric on the bottom of the trench. (In addition to the 12" deep sand layer already specified.)

5. Clean, washed 1-3 inch stone aggregate should be placed in the excavated reservoir in lifts, and <u>lightly</u> compacted with plate compactors to form the course base. Unwashed stone has enough associated sediment to pose a clear risk of clogging at the soil/filter cloth interface. The stone aggregate must be approved by the soils engineer.

6. A simple observation well should be installed in every trench. Typical details for the well are provided in Figure 1.0. The observation well is needed to monitor the performance of the trench, and is also useful in marking its location. The drain time for a trench can be measured by placing a graduated dip-stick down the well immediately after a storm and again 24 and 48 hours later.

7. Post-construction sediment control is critical. It is therefore important that; 1) sediment and erosion controls be inspected to make sure they still work, 2) the vegetated buffer strips are established immediately, preferably by sodding, and 3) if hydroseeding is used, reinforced silt fences must be placed between the buffer and trench to prevent sediment entry before the buffer becomes fully established.

WC036_MCDONALDS_TOANO - 022

Table 1.0: Approved Geo-Textiles For Use in Infiltration Trenches

Mirafi 140-N	Note: This is a partial list of acceptable filter fabrics for use in infiltration trenches available from suppliers in the Washington, D.C. area. The use of a brand name does not constitute an endorsement by Baker of any particular product or company.
Supac 4NP, 4.5NP, 5NP, and 8NP	
Typar 3401	
AMOCO 4545	
EXXON Geo-textiles No. 125D, 130D and 150D	
TerraTex SD	

Figure 1.0: Detailed Schematic of a Typical Observation Well

WC036_MCDONALDS_TOANO - 023

Routine Maintenance

Inspection

The trench should be inspected several times in the first few months of operation, and then annually thereafter. The inspections should be conducted after large storms to check for surface ponding that might indicate local or wide spread clogging. Water levels in the observation well should be recorded over several days to check trench drainage. Surface trenches can be inspected by hand by digging with a trowel down to the first layer of filter fabric located one foot below the surface.

Buffer Maintenance

The condition of the grass buffer strips in surface trenches should be inspected annually. Growth should be vigorous and dense. Bare spots, eroded areas, or "burned out" areas (from road salt or gasoline spills) should be reseeded or re-sodded. Watering and/or fertilization should be provided during the first few months after the strip is established, and may periodically be needed in times of drought.

Mowing

Grass filter strips should be mowed at least twice a year to prevent woody growth as well as for aesthestic reasons. Filter strips in residential areas will need to be mowed more frequently (10 to 14 times per year). Filter strip performance will be impaired if the grass is cut too short (Tollner, 1976). To prevent lawn clippings from clogging the trench, mowers should be equipped with baggers or at a minimum be directed away from the trench.

Tree Pruning

Adjacent trees may need to be trimmed if their drip-line (i.e. the reach of the branches) extends over a surface trench so that tree leaves do not clog the trench. In addition, pioneer trees that start to grow in the vicinity of a trench should be removed immediately thereby avoiding root puncture of the filter fabric through which sediment might enter the structure.

WC036_MCDONALDS_TOANO - 024

5.0 APPENDIX 1

WC036_MCDONALDS_TOANO - 025

STORM DRAINAGE CALCULATIONS

MARCH 26, 1992

S.O.# 18788-01-AAA

FOR

TOANO SITE

Stonehouse District
James City County, Virginia

Prepared by
James W. Whitehead, LS3B
Carl E. Duncan, P. E.

Prepared By
Baker
Michael Baker Jr., Inc.
RICHMOND, VA

STORM DRAINAGE CALCULATIONS

Infiltration Trench No. 1 Outfall

Area = 0.743*
C = 0.665*
T_c = 10 min *From Plan Sheet
I_{25} = 7 in/hr

ASSUMPTIONS:

1. No infiltration occurs in trench.
2. No storage behind dam.
3. Area adjacent to ditch (22' on roadside & 20' on other side) contributes to ditch flow:
   Area = $\frac{(42)(390)}{43560}$ = 0.38
4. "C" value of shoulder/ditch area is 0.50 from VDOT manual.
5. Analyze ditch on 25 yr. for capacity and 2 yr. for velocity.

25 yr.

Q = [(0.665)(0.743) + (0.50)(0.38)] (7) = 4.78 cfs
Assuming worst cross section of 2:1 V-Ditch

$Q = 1.45/n\ (R)^{2/3} S^{1/2} A$

A = (11/12) (2) = 1.68 ft.^{2}
R = A/P P = 2 5 *(11/12 = 4.09 ft.
R = 1.68/4.09 = 0.41
S = 0.0118
n = 0.03

D = 10.8"
V = 2.99 FPS

DITCH IS ADEQUATE

OUTFALL CHANNEL TO CULVERT 1

A = 0.20 Ac
C = 0.90
I_2 = 5.8 T_c = 5
Q_2 = (0.20)(0.90)(5.8)
= 1.04 cfs
Using Mannings EQ'N
d = 6.10"
v = 2.01 FPS

Culvert 2

Culvert 2 is an extension of an existing culvert with no additional surface drainage entering the system. The effects on the head of this pipe will be negligible.

Rev 3-83

Project McDonalds (Toano)
STRUCTURE 3

Plan Sheet No. ____ Designer ____
Rev. Date ____ Date ____

Sheet ____ of ____

HYDROLOGICAL DATA:

D.A. = ____ AC.

$Q_{100} = CIA \therefore I_{100} = 81 ; T_c = 10$

$CA = (0.743)(0.665) + \frac{(14\,LF)(42')}{43560}(0.5)$

$= 0.5491$

$Q_{100} = 0.5491\,(8.1) = 4.45$

AHW Controls

100 yr. Flood plain ____ elev. ____
Design AHW depth ____ elev. ____
Structures ____ elev. ____

STATION: ____

freq. TWelev.
____ = ____
____ = ____
____ = ____
____ = ____
____ = ____

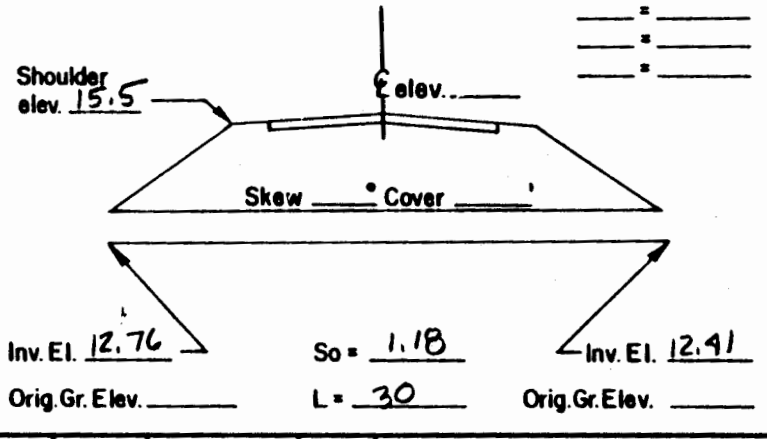

DISCHARGES USED

Q 100 = 4.45 CFS
Q ____ = ____ CFS
Q ____ = ____ CFS
Q ____ = ____ CFS
Q ____ = ____ CFS

RISK ASSESSMENT ADT ____

Detours Available ____, Length ____
Overtopping Stage ____
Flood Plain Management ____
Criteria and Significant Impact ____

240 A

CULVERT TYPE & SIZE	Q	Q/B	HEADWATER COMPUTATIONS: INLET CONT. HW/D	INLET CONT. HW	OUTLET CONTROL Ke	dc	$\frac{dc+D}{2}$	ho	H	LSo	HW	CONT. HW. ELEV.	OUTLET VELOCITY C.M.	OUTLET VELOCITY Smooth	End Treat.	COMMENTS
1-15"	4.45	—	1.12	1.40	0.5	0.8	1.025	1.025	0.4	0.35	1.08	1.40	1.0			BACKWATER ELEV = 13.80
																contained in Ditch X-SECTION

Design Flood Exceed. Prob. ____ Elev. ____
Overtop Flood Exceed. Prob. ____ Elev

CHART 5

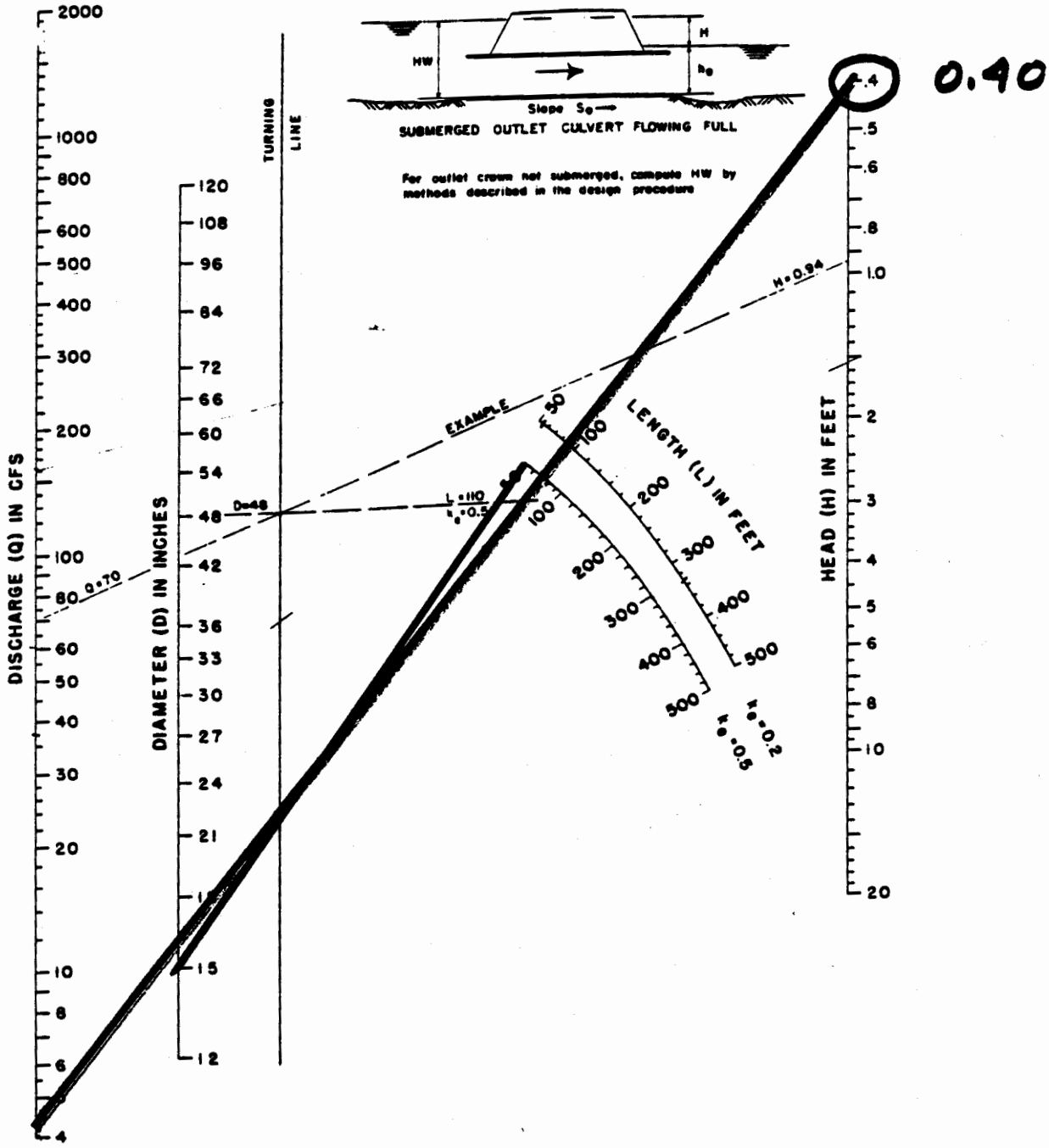

HEAD FOR
CONCRETE PIPE CULVERTS
FLOWING FULL
n = 0.012

BUREAU OF PUBLIC ROADS JAN. 1963

CHART 1

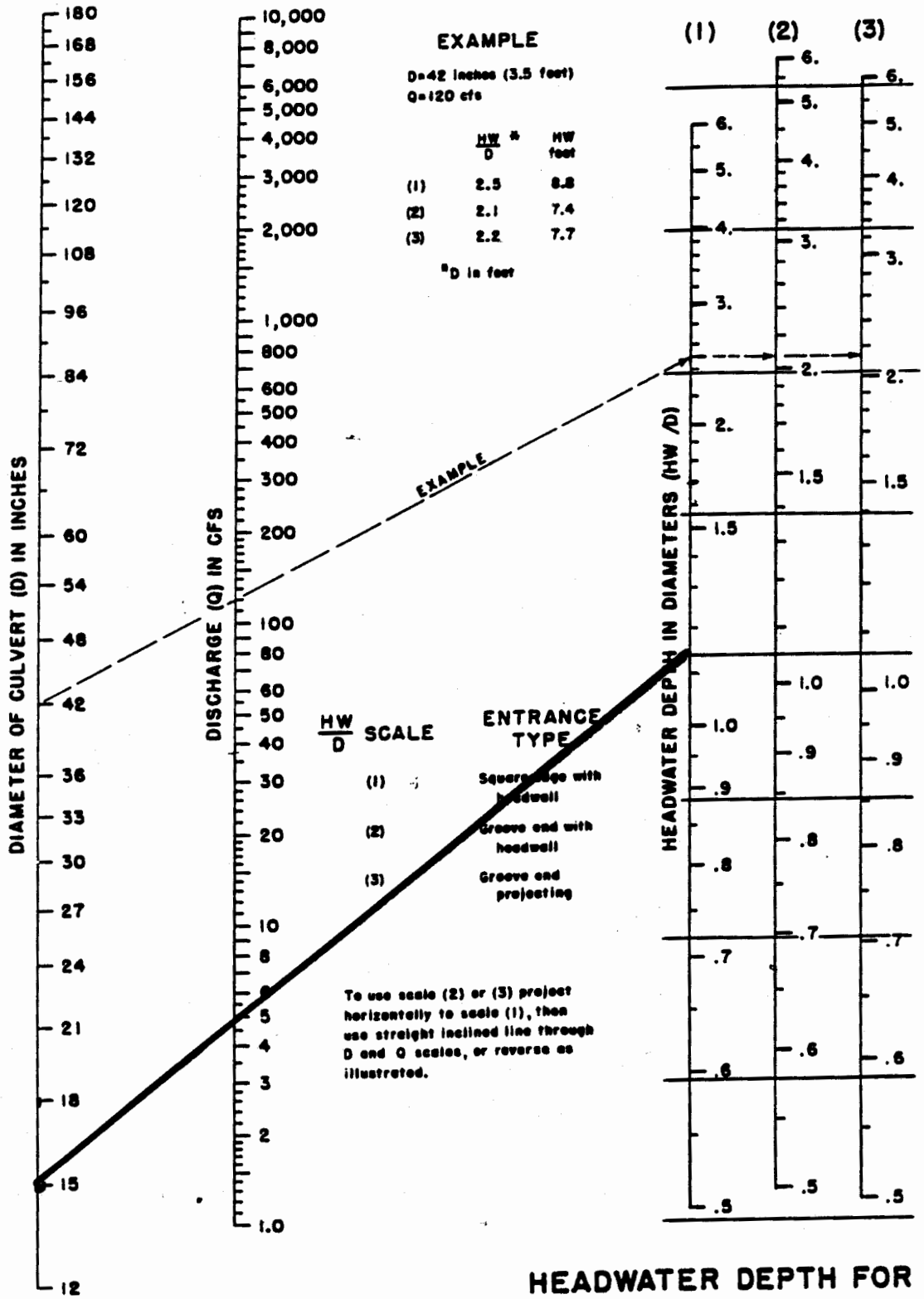

HEADWATER DEPTH FOR CONCRETE PIPE CULVERTS WITH INLET CONTROL

HEADWATER SCALES 2&3
REVISED MAY 1964

BUREAU OF PUBLIC ROADS JAN. 1963

Rev 3-83

Project STRUCTURE 1

Plan Sheet No. ____ Designer ____ Sheet ____ of ____

Rev. Date ____ Date ____

HYDROLOGICAL DATA:

D.A. = ____ AC.

$Q_{10} = (0.20)(0.90)(7.1) = 1.28$

$Q_{100} = (0.20)(0.90)(9.5) = 1.71$

AHW Controls STATION: ____

100 yr. Flood plain ____ elev. ____

Design AHW depth ____ elev. ____

Structures ____ elev. ____

freq. TW elev.

____ = ____

____ = ____

____ = ____

____ = ____

____ = ____

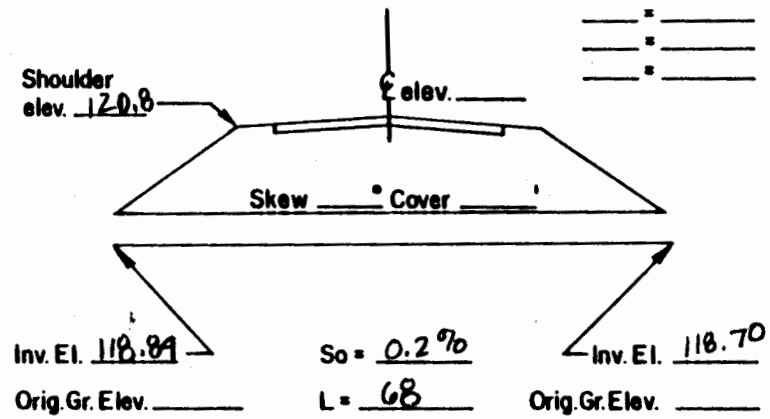

DISCHARGES USED

Q 2 = ____ CFS

Q 10 = 1.28 CFS

Q 100 = 1.71 CFS

Q ____ = ____ CFS

Q ____ = ____ CFS

RISK ASSESSMENT ADT ____

Detours Available ____, Length ____

Overtopping Stage ____

Flood Plain Management ____

Criteria and Significant Impact ____

240 A

CULVERT TYPE & SIZE	Q	Q/B	HEADWATER COMPUTATIONS									CONT. HW. ELEV.	OUTLET VELOCITY		End Treat.	COMMENTS
			INLET CONT.		OUTLET CONTROL											
			HW/D	HW	Ke	dc	$\frac{dc+D}{2}$	ho	H	LSo	HW		C.M.	Smooth		
1-15"	1.28		0.5	0.63	0.5	0.8	1.0	1.0	0.4	0.13	1.26	1.26				LOWEST DISCHARGE ON CHART 4 CFS
	1.71		0.58	0.72	0.5	0.8	1.0	1.0	0.4	0.13	1.26	1.26				

Design Flood Exceed. Prob. ____ Elev. ____

Overtop Flood Exceed. Prob. ____ Elev. ____

CHART 1

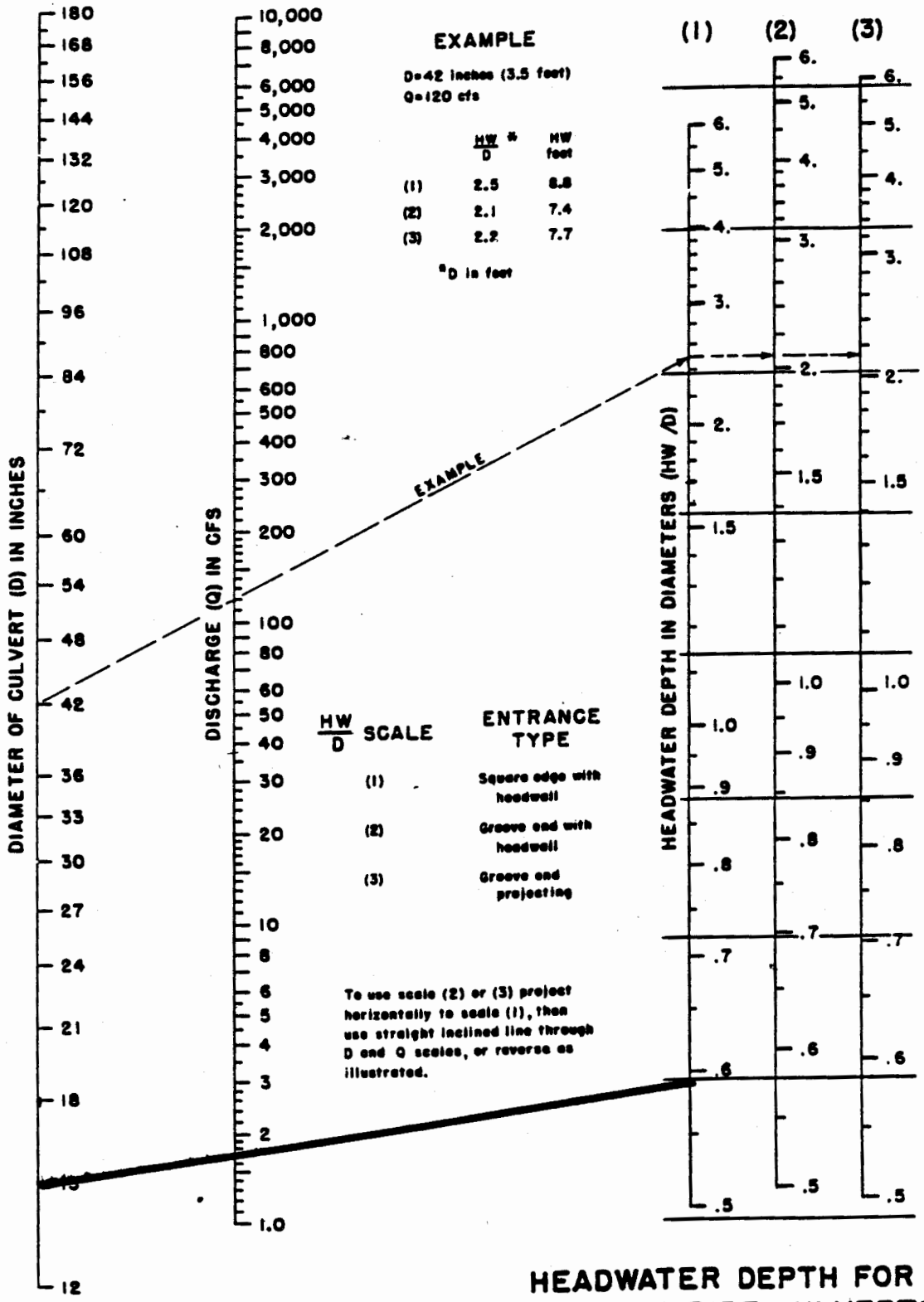

D.58

HEADWATER DEPTH FOR CONCRETE PIPE CULVERTS WITH INLET CONTROL

HEADWATER SCALES 2&3
REVISED MAY 1964

BUREAU OF PUBLIC ROADS JAN. 1963

WC036_MCDONALDS_TOANO - 032

CHART 5

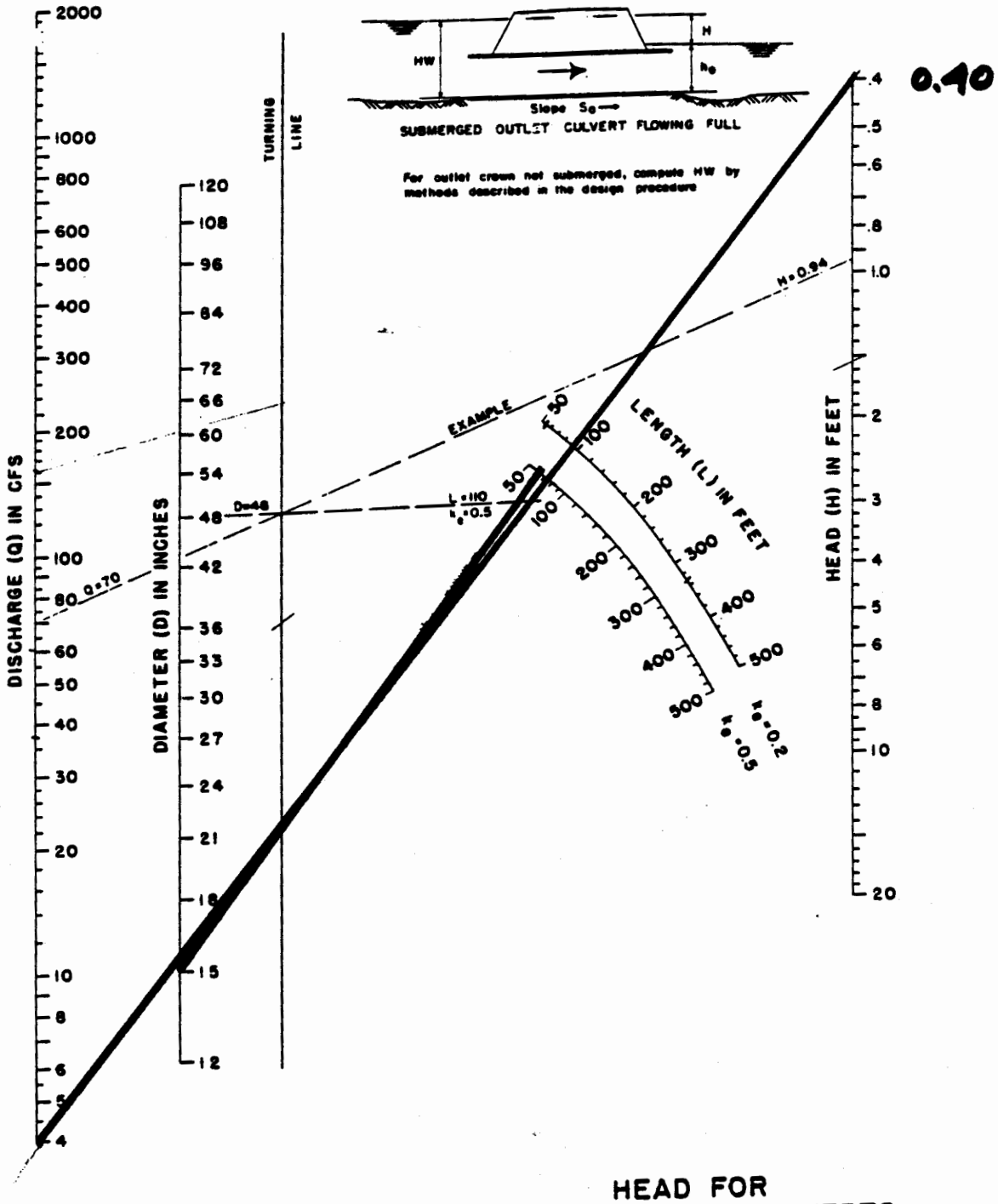

HEAD FOR
CONCRETE PIPE CULVERTS
FLOWING FULL
n = 0.012

BUREAU OF PUBLIC ROADS JAN. 1963

WC036_MCDONALDS_TOANO - 033

6.0 SOILS

6.0 SOILS

The subject site is located in the northern area of James City County. More particularly, the site is located on the west line of Virginia State Route 30 approximately 300 ft. south of the intersection of Route 30 and Route 168. The site consists of 2.12 ac. of land in two (2) parcels. The site has frontage on Route 30 and an ingress/egress to Route 168 by virtue of an access driveway. The site is bounded on the east by Route 30, on the north by the Texaco Station and Route 168, on the west by the lands of the seller (also the site of the septic field) and on the south by the lands of the seller.

Ground Water Resources - The site will obtain water service from a deep well to be located in the southwest quadrant of the site. This well will be served by deep aquifiers at 200 to 350 ft of depth. As a result, non-point source pollution from the parking lot and the BMP facility is not an issue in spite of their close proximity to the well site.

Soils - The site lies in the Kempsville-Emporia-Suffolk area of the coastal plain. These soils are deep, well-drained soils that are dominantly loamy and gently sloping to very steep. The site is located on James City Soil Survey Map #2 and is comprised entirely of 31-B, Suffolk fine sandy loam, with 2% slopes. The upper surface is a grayish brown fine sandy loam, the subsoil is a strong brown fine sandy clay loam to about 26 inches in depth. The substratum is brown loamy fine sane to a depth of 64 inches. The substratum has been found to have a perculation rate of 4 inches/hour to 5 inches/hour. We recommend a design based on 3.5 inches/hr.

based on test?
Yes - he will
fax test

McDonalds - Stuckey

Pre dev -

Phos -

offsite Texaco Parcel - 0.56 ac x .1 = ~~.056~~ lbs

onsite - crop 0.91 x .9 = .82 lbs

crop 1.21 x .9 = 1.09 lbs

1.91 lbs

Sed. .56 x .01 x 2000 = = ~~11~~ lbs

.91 x .45 x 2000 = = 819 lbs

1.21 x .45 x 2000 = = 1089 lbs

1908 lbs

Post Development

Phos - Grassed - .56 x .1 = ~~.056~~

60% Imp - 1.2 x (2.12 - 0.28) = 2.24

Uncontrolled - .28 x .2 = .56

2.8

(75% removal)

.56 + .25 removal x 2.24 = 1.12 lbs

Sed Grassed - = ~~11~~ lbs

.16 x 2000 x (2.12 - 0.28) = = 589 lbs

.02 x 2000 x .28 = 11

600

11 lbs + .25 x 589 = 158 lbs

WATERSHED	WC	MAINTENANCE PLAN	No	CTRL STRUC DESC	
BMP ID NO	036	SITE AREA acre	2.1	CTRL STRUC SIZE inches	
PLAN NO		LAND USE	COMM	OTLT BARRL DESC	
TAX PARCEL	(4-4)(1-20)	old BMP TYP	INFIL	OTLT BARRL SIZE inch	0
PIN NO	4401000020	JCC BMP CODE			
CONSTRUCTION DATE	3/26/1992	POINT VALUE	8	EMERG SPILLWAY	No
PROJECT NAME	TOANO McDONALDS			DESIGN HW ELEV	
FACILITY LOCATION	9193 BARHAMSVILLE ROAD			PERM POOL ELE	
CITY-STATE	TOANO VA 23168	SVC DRAIN AREA acres	1.7	2-YR OUTFLOW cfs	
CURRENT OWNER	McDONALDS CORORATION			10-YR OUTFLOW cfs	
OWNER ADDRESS	BOX 66207			REC DRAWING	No
OWNER ADDRESS 2	AMF O'HARE AIRPORT	SERVICE AREA DESCRI	TEXACO GAS STATION		
CITY-STATE-ZIP CODE	CHICAGO ILLINOIS 60666	IMPERV AREA acres		CONSTR CERTI	No
OWNER PHONE		RECV STREAM	WARE CK TRIB		
MAINT AGREEMENT	Yes	EXT DET-WQ-CTRL	No	LAST INSP DATE	
EMERG ACTION PLAN	No	WTR QUAL VOL acre-ft	0.17	INTERNAL RATING	
		CHAN PROT CTRL	No	MISC/COMMENTS	
		CHAN PROT VOL acre-ft	0.12		
		SW/FLOOD CONTROL	No		
		GEOTECH REPORT	No		

Get Last BMP No

Return to Menu