# CERTIFICATE OF AUTHENTICITY

**THIS IS TO CERTIFY THAT THE FOLLOWING ELECTRONIC RECORDS ARE TRUE AND ACCURATE REPRODUCTIONS OF THE ORIGINAL RECORDS OF JAMES CITY COUNTY GENERAL SERVICES DEPARTMENT- STORMWATER DIVISION; WERE SCANNED IN THE REGULAR COURSE OF BUSINESS PURSUANT TO GUIDELINES ESTABLISHED BY THE LIBRARY OF VIRGINIA AND ARCHIVES; AND HAVE BEEN VERIFIED IN THE CUSTODY OF THE INDIVIDUAL LISTED BELOW.**

**BMP NUMBER:** **WC042**

**DATE VERIFIED:** **July 10, 2012**

**QUALITY ASSURANCE TECHNICIAN:** **Leah Hardenbergh**

Leah Hardenbergh

**LOCATION: WILLIAMSBURG, VIRGINIA**

# Stormwater Division

## MEMORANDUM

**DATE:** March 12, 2010

**TO:** Michael J. Gillis, Virginia Correctional Enterprises Document Management Services

**FROM:** Tina Cantwell, Stormwater

**PO:** 270712

**RE:** Files Approved for Scanning

---

**General File ID or BMP ID:** WC042

**PIN:** 0510700001A

**Subdivision, Tract, Business or Owner Name (if known):** Association at Stonehouse, Inc. (The)

**Property Description:** Behind (South) 9917 Mountain Berry Court

**Site Address:** Stonehouse Subdivision

*(For internal use only)* **Box** 13 **Drawer:** 9

**Agreements:** (in file as of scan date) **N** **Book or Doc#:** **Page:**

Comments

**James City County, Virginia**
**Environmental Division**

**Stormwater Management/BMP Facilities**
**Record Drawing/Construction Certification**
*Review Tracking Form*

County Plan No.: S-12-98
Project Name: SH/LAUREL RIDGE PH 2, SEC 4C
Stormwater Management Facility: BLOCK WALL DRY DET.
Phase: ☐ I ☒ II ☐ III

☐ Information Received. Date: 11-16-00 LANDMARK
☐ Administrative Check.
- ☒ Record Drawing Date: 11-16-00 LANDMARK
- ☒ Construction Certification Date: 11-15-00 LANDMARK
- ☒ RD/CC Standard Forms N/A (Required after Feb 1st 2001Only)
- ☐ Insp/Maint Agreement ? Info:
- ☒ BMP Maintenance Plan NO Location:
- ☐ Other:

☒ Standard E&SC Note on Approved Plan Requiring RD/CC or County comment in plan review file.
☒ Yes ☐ No Location: Note #18 Sheet 10; 3/19/98 Comm #5
☒ Assign County BMP ID Code Code: WC 042
☒ Log into Division's "As-Built" Tracking Log
☒ Add Location to GIS Database Map. Obtain GIS site information (GPIN, Owner, Site Area, Address, etc.)
☒ Preliminary Log into BMP Database (BMP ID #, Site Plan #, GPIN, Project Name)
☒ Active Project File Review (correspondence, H&H, etc.).
☒ Initial As-Built File setup (label, copy hydraulics, BMP information, etc.).
☒ Inspector Check of RD/CC. GEL
☒ Pre-Inspection Drawing Review - Approved Plan (Quick look prior to field inspection).
☒ Final Inspection (FI) Performed Date: 8/29/01
☒ Record Drawing (RD) Review Date: 11/10/01
☒ Construction Certification (CC) Review Date: 12/10/01
☒ Actions:
- ☐ No comments.
- ☒ Comments. Letter Forwarded. Date: 12/11/01
  - ☒ Record Drawing (RD)
  - ☒ Construction Certification (CC)
  - ☐ Construction-Related (CR)
  - ☐ Site Issues (SI)
  - ☐ Other :

☐ Second Submission: 4/14/03 RD OK; Reinspect 4-24-03; Reinspect 7-7-03
☐ Third Submission:
☒ Acceptable for stormwater managment facility purposes (RD/CC/CR/Other). Proceed with bond release.
☒ Notify Darryl/Joan/Pat of acceptability using email (preferred), form or verbal.
☒ Check/Clean active file of any remaining material and finish "As-Built" file.
☒ Add to County BMP Inventory/Inspection schedule (Phase I, II or III).
☒ Copy Final Inspection Report into County BMP Inspection Program file.
☐ Digital Photographs obtained.
☒ Add to JCC Hydrology & Hydraulic database (optional).

BMP Certification Information Acceptable

Plan Reviewer: [signature] P.E. Date: 7/8/03

NOTE: THIS RECORD DRAWING IS BASED ON AN ACTUAL FIELD SURVEY PERFORMED BY LANDMARK DESIGN GROUP, 06/00 AND REFLECTS CONDITIONS PRESENT AT THAT TIME.

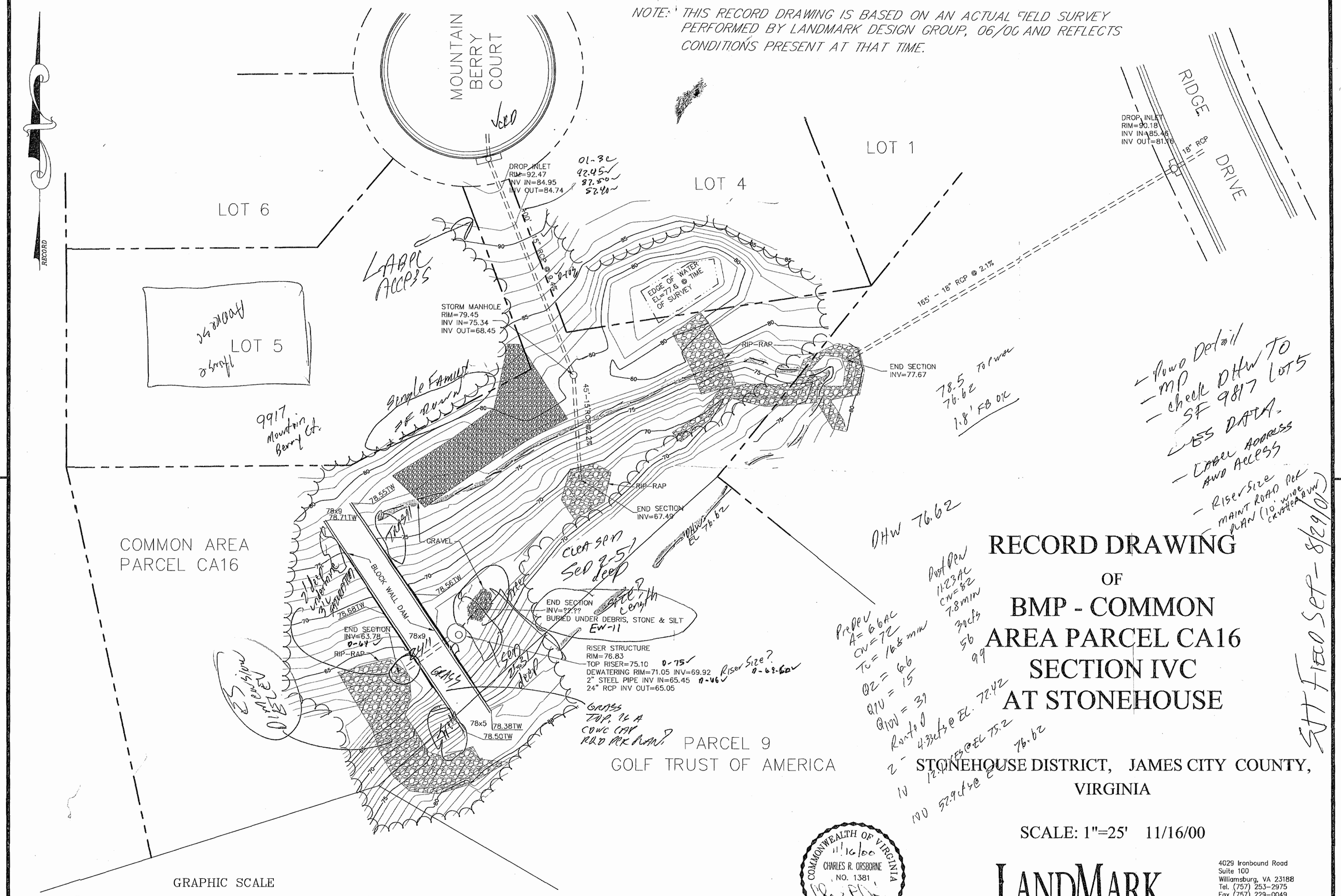


# RECORD DRAWING
## OF
# BMP - COMMON AREA PARCEL CA16 SECTION IVC AT STONEHOUSE

STONEHOUSE DISTRICT, JAMES CITY COUNTY, VIRGINIA

SCALE: 1"=25' 11/16/00

COMMONWEALTH OF VIRGINIA
11/16/00
CHARLES R. ORSBORNE
NO. 1381
LAND SURVEYOR


LANDMARK DESIGN GROUP
Engineers • Planners • Surveyors
Landscape Architects • Environmental Consultants

4029 Ironbound Road
Suite 100
Williamsburg, VA 23188
Tel. (757) 253-2975
Fax (757) 229-0049
Email: lmdg@landmarkdgwb.com

5544 Greenwich Road
Suite 200
Virginia Beach, VA 23462
Tel. (757) 473-2000
Fax (757) 497-7933
Email: lmdg@landmarkdg.com


| | |
|---|---|
| DRAWN BY : PF | PROJ. NO. : 1990131-000.46 |

1990131-000.48 Stonehouse SWM RMP Record Drawings\IVC-9ofl4.dwg

WC042_STONEHOUSE_SEC_4C_PHASE1 - 004

NOTE: THIS RECORD DRAWING IS BASED ON AN ACTUAL FIELD SURVEY PERFORMED BY LANDMARK DESIGN GROUP, 06/00 AND REFLECTS CONDITIONS PRESENT AT THAT TIME.

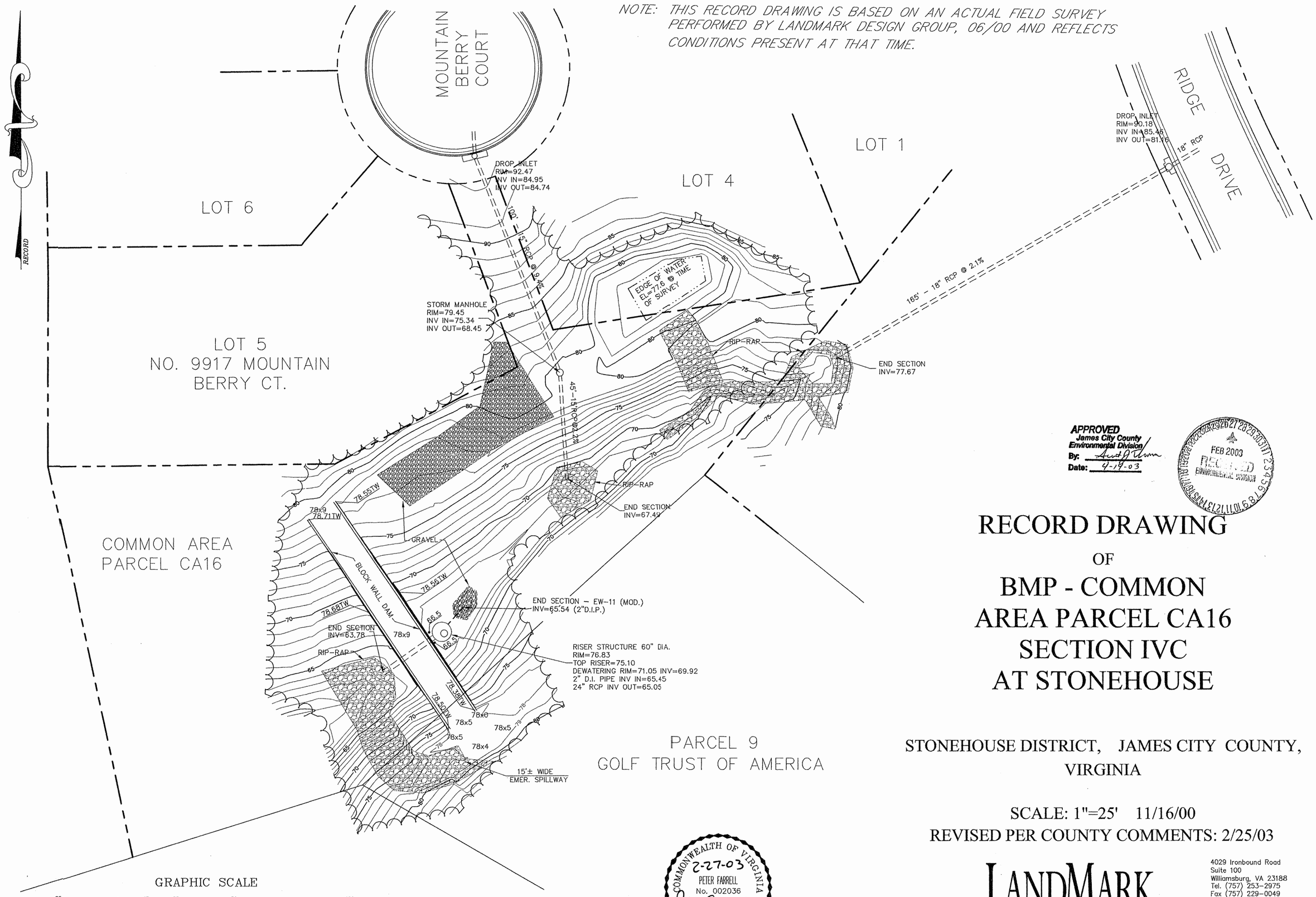


APPROVED
James City County
Environmental Division
By: Aut A Unm
Date: 4-19-03

FEB 2003
RECEIVED
ENVIRONMENTAL DIVISION

COMMONWEALTH OF VIRGINIA
2-27-03
PETER FARRELL
No. 002036
Peter Farrell
LAND SURVEYOR

# RECORD DRAWING

OF

# BMP - COMMON AREA PARCEL CA16 SECTION IVC AT STONEHOUSE

STONEHOUSE DISTRICT, JAMES CITY COUNTY, VIRGINIA

SCALE: 1"=25' 11/16/00

REVISED PER COUNTY COMMENTS: 2/25/03


LANDMARK DESIGN GROUP
Engineers • Planners • Surveyors
Landscape Architects • Environmental Consultants

4029 Ironbound Road
Suite 100
Williamsburg, VA 23188
Tel. (757) 253-2975
Fax (757) 229-0049
Email: lmdg@landmarkdgwb.com

5544 Greenwich Road
Suite 200
Virginia Beach, VA 23462
Tel. (757) 473-2000
Fax (757) 497-7933
Email: lmdg@landmarkdg.com


| | |
|---|---|
| DRAWN BY : PF | PROJ. NO. : 1990131-000.46 |
| CHKD. BY : RSP | DWG. NO. : 11683 W |

WC 042

WC042_STONEHOUSE_SEC_4C_PHASE1 - 005

# DRAINAGE AREA MAP

DEVELOPMENT AREA ONE, PHJASE I

## SECTION IV-C

AT STONEHOUSE

SCALE: 1"=50'

WO042_STONEHOUSE_SEC_4C_PHASE1 - 006

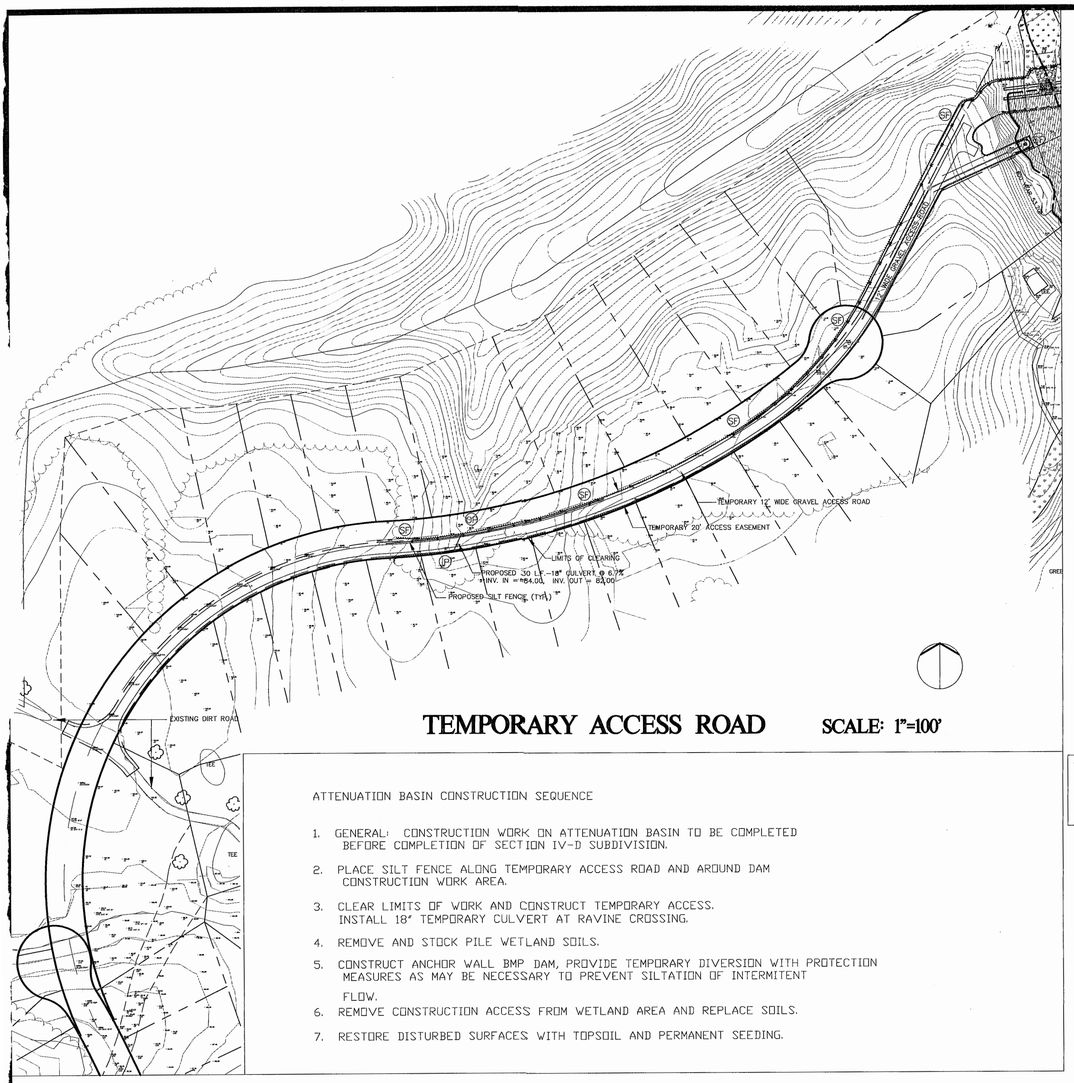


## TEMPORARY ACCESS ROAD

SCALE: 1"=100'

NOTE: UPON COMPLETION, THE DAM WILL BE CERTIFIED BY A PROFESSIONAL ENGINEER WHO HAS INSPECTED THE STRUCTURE DURING CONSTRUCTION.

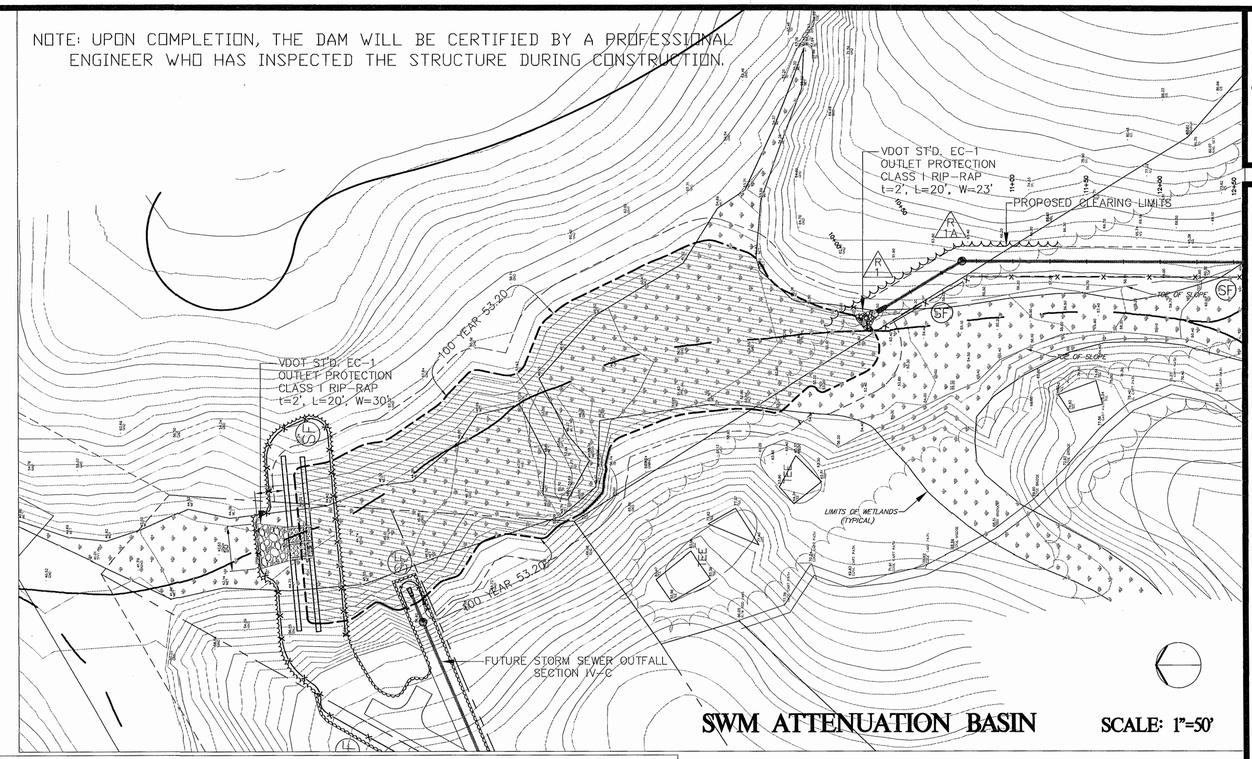


## SWM ATTENUATION BASIN

SCALE: 1"=50'

**NOTE: VDOT DOES NOT ASSUME RESPONSIBILITY FOR MAINTENANCE OF THE DETENTION/RETENTION POND OR IT'S STRUCTURES AND SHALL BE SAVED HARMLESS FROM ANY DAMAGE**

ATTENUATION BASIN CONSTRUCTION SEQUENCE

1. GENERAL: CONSTRUCTION WORK ON ATTENUATION BASIN TO BE COMPLETED BEFORE COMPLETION OF SECTION IV-D SUBDIVISION.
2. PLACE SILT FENCE ALONG TEMPORARY ACCESS ROAD AND AROUND DAM CONSTRUCTION WORK AREA.
3. CLEAR LIMITS OF WORK AND CONSTRUCT TEMPORARY ACCESS. INSTALL 18" TEMPORARY CULVERT AT RAVINE CROSSING.
4. REMOVE AND STOCK PILE WETLAND SOILS.
5. CONSTRUCT ANCHOR WALL BMP DAM, PROVIDE TEMPORARY DIVERSION WITH PROTECTION MEASURES AS MAY BE NECESSARY TO PREVENT SILTATION OF INTERMITENT FLOW.
6. REMOVE CONSTRUCTION ACCESS FROM WETLAND AREA AND REPLACE SOILS.
7. RESTORE DISTURBED SURFACES WITH TOPSOIL AND PERMANENT SEEDING.

NOTES:
1. CLEAR GRUB AND STRIP TOPSOIL TO SUBGRADE MATERIAL.
2. COMPACT SUBGRADE FILL AND BACKFILL IN ACCORDANCE WITH SPECIFICATIONS.
3. THE CONTRACTOR SHALL CONSTRUCT ANY NECESSARY TAIL DITCHES TO REMOVE WATER FROM BASE OF FILL.

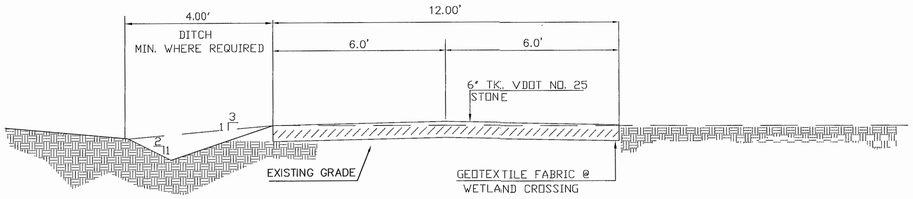


## TYPICAL TEMPORARY ACCESS ROAD

NOT TO SCALE

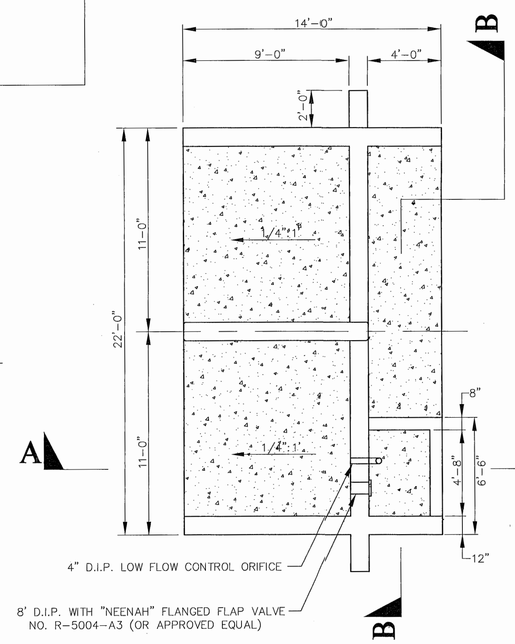


## PLAN

SCALE: 1/4" = 1'-0"

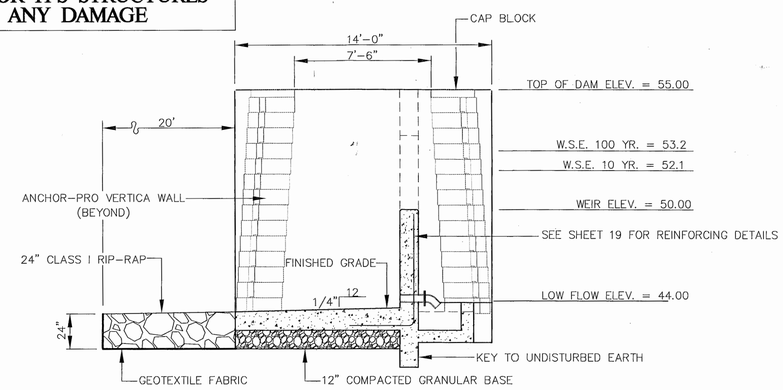


## SECTION A-A

SCALE: 1/4" = 1'-0"

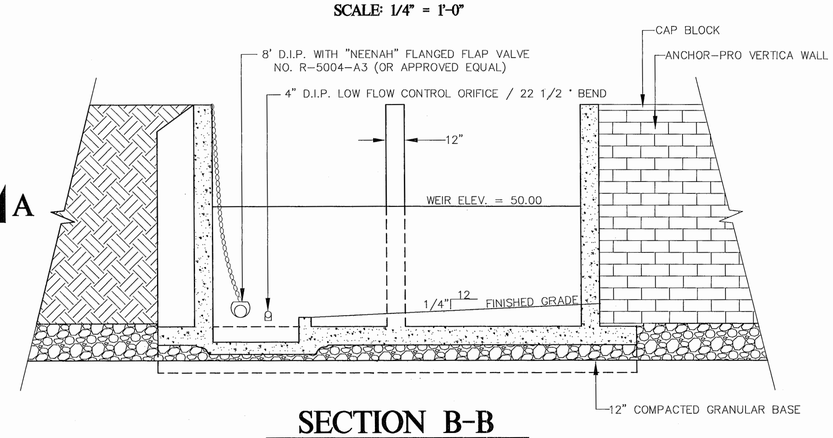


## SECTION B-B

SCALE: 1/4" = 1'-0"

COMMONWEALTH OF VIRGINIA
RICHARD S. PHILLIPS
No. 023631
PROFESSIONAL ENGINEER

Langley and McDonald, P.C.
Engineers • Surveyors • Planners
Landscape Architects • Environmental Consultants
WILLIAMSBURG
VIRGINIA BEACH

| | |
|---|---|
| DES. | R.S.P. |
| DWN. | J.A.M. |
| CHK. | J.L.H. |
| DATE | OCT. 24, 1997 |

DEVELOPMENT AREA ONE, PHASE I
SECTION IVD
AT STONEHOUSE
FOR
STONEHOUSE L.L.C.
STORMWATER ATTENUATION BASIN SECTION AND DETAILS
STONEHOUSE DISTRICT JAMES CITY COUNTY VIRGINIA

PROJ.NO. 96038-0452
SCALE: AS SHOWN
SHEET 18 OF 23
DWG. NO.

REVISED: 6/17/98 PER J.C.C. COMMENTS REVISED: 2/12/98 PER J.C.C. COMMENTS
REVISED: 4/23/98 PER J.C.C. COMMENTS

WC042_STONEHOUSE_SEC_4C_PHASE1 - 007

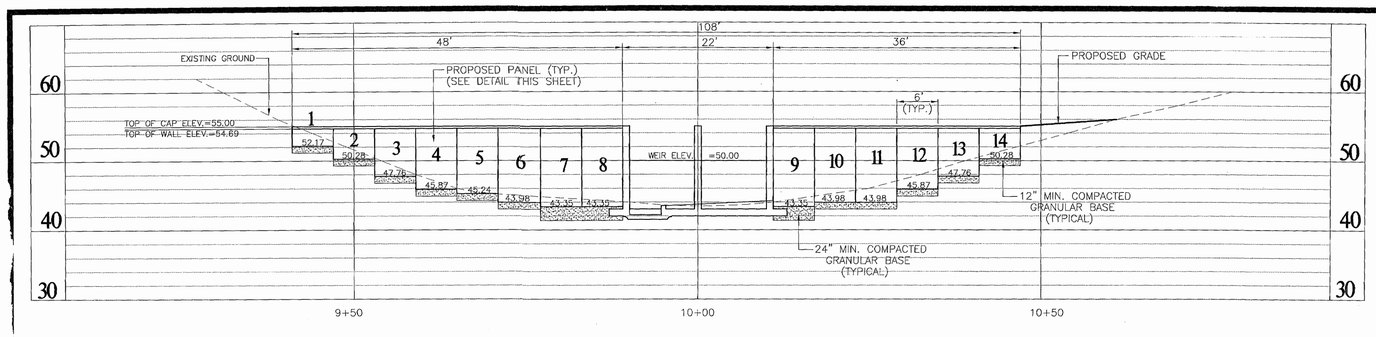


## SECTION THROUGH DAM

SCALE: 1" = 10' HORIZONTAL
1" = 10' VERTICAL

| PANEL NUMBER | NUMBER OF BLOCKS (HEIGHT) | ELEV. AT TOP OF STONE BASE |
|---|---|---|
| 1 | 4 | 52.17 |
| 2 | 7 | 50.28 |
| 3 | 11 | 47.76 |
| 4 | 14 | 45.87 |
| 5 | 15 | 45.24 |
| 6 | 17 | 43.98 |
| 7 | 18 | 43.35 |
| 8 | 18 | 43.35 |
| 9 | 18 | 43.35 |
| 10 | 17 | 43.98 |
| 11 | 17 | 43.98 |
| 12 | 14 | 45.87 |
| 13 | 11 | 47.76 |
| 14 | 7 | 50.28 |

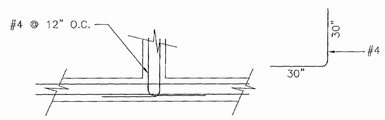


## TYPICAL WALL INTERSECTION DETAIL

N.T.S.

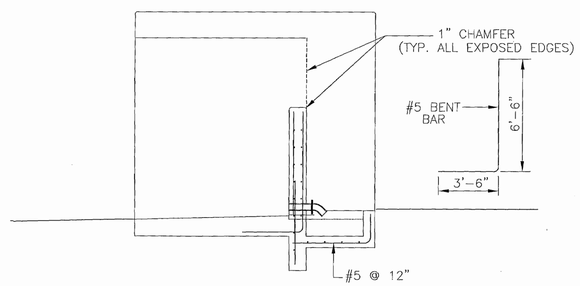


## SECTION A-A

SCALE: 1/4" = 1'

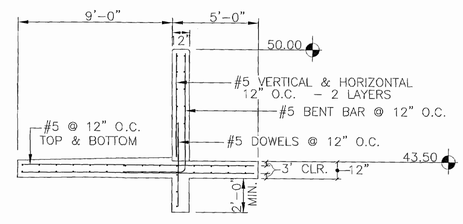


## SECTION C-C

SCALE: 1/4" = 1'

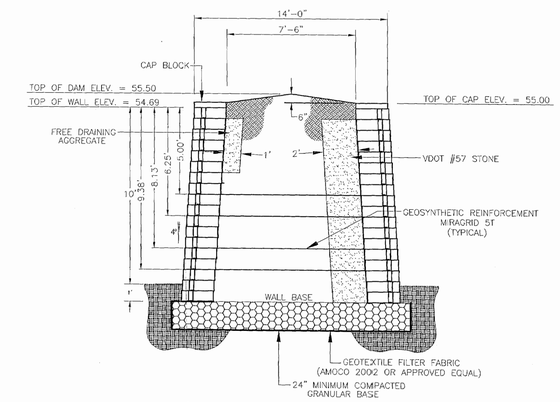


SECTION B-B
ANCHOR VERTICA PRO - WALL SECTION

SCALE: 1/4" = 1'

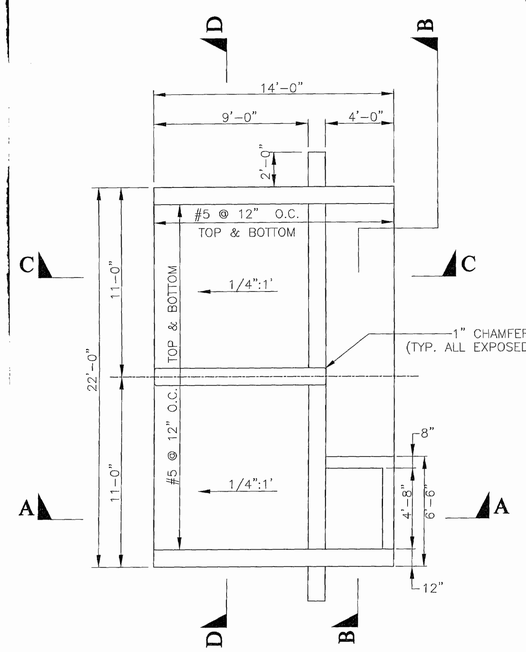


## PLAN

SCALE: 1/4" = 1'

ALL CONCRETE - CLASS A3, 3000 P.S.I. AT 28 DAYS
REINFORCING STEEL-ASTM A615, GRADE 60

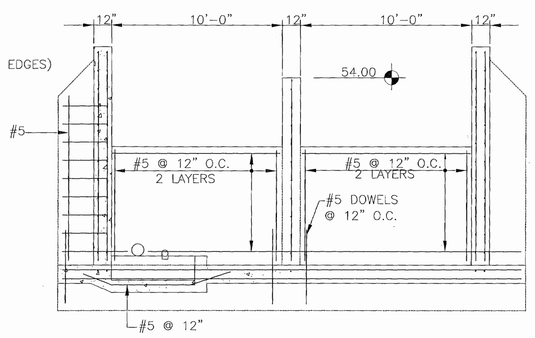


## SECTION B-B

SCALE: 1/4" = 1'

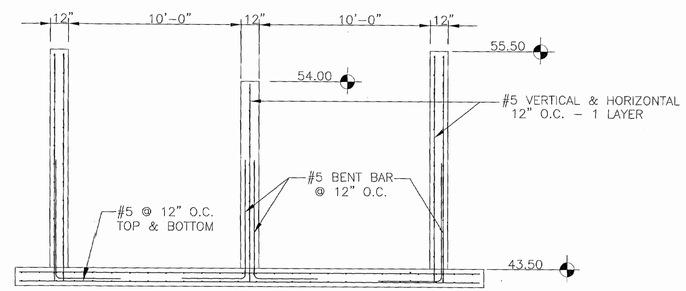


## SECTION D-D

SCALE: 1/4" = 1'

COMMONWEALTH OF VIRGINIA
RICHARD S. PHILLIPS
No. 023631
PROFESSIONAL ENGINEER

Langley and McDonald, P.C.
Engineers • Surveyors • Planners
Landscape Architects • Environmental Consultants
VIRGINIA BEACH WILLIAMSBURG

| | |
|---|---|
| DES. | R.S.P. |
| DWN. | G.S.W. |
| CHK. | R.S.P. |
| DATE | OCT. 24, 1997 |

DEVELOPMENT AREA ONE, PHASE I
SECTION IVD
AT STONEHOUSE
FOR
STONEHOUSE L.L.C.
SWM ATTENUATION BASIN SECTION AND DETAILS
STONEHOUSE DISTRICT JAMES CITY COUNTY VIRGINIA

PROJ.NO. 96038-0452
SCALE: AS NOTED
SHEET 19 OF 23
DWG. NO. 96038-1215.005-JCC14Q

REVISED: 4/23/98 PER J.C.C. COMMENTS
REVISED: 7/13/98 REVISED WALL SECTION

WC042_STONEHOUSE_SEC_4C_PHASE1 - 008

ESTATE
& KATE SHERMAN
(TAX PARCEL 4-2, 1-16)

CONSERVATION EASEMENT
DOCUMENT NO. 97-0015572

OUNTAIN BERRY COURT
50' R/W

10' DRAINAGE AND
UTILITY EASEMENT
FOR USE BY J.C.S.A.
(TYP. ALL LOTS)

N/F
CHARLES A. COOK
(TAX PARCEL 4-2, 1-15)

DELINEATED WETLANDS(TYP.)

CONSERVATION EASEMENT
DOCUMENT NO. 97-0015572

N/F
R.M. SHERMAN
ESTATE
& KATE SHERMAN
(TAX PARCEL 4-2, 1-16)

SECTION IV-A
"LEATHERLEAF"
DOCUMENT NO. 970016139
P.B. 67, PG. 56-57

PARCEL
(9)
GOLF TRUST OF AMERICA, L.P.
HOLE NO. 11
DOCUMENT NO. 97-0002802

VARIABLE WIDTH
DRAINAGE AND
ACCESS EASEMENT

100 YEAR WATER
SURFACE ELEVATION(W.S.E.)
ELEVATION = 76.62

15' DRAINAGE AND
ACCESS EASEMENT

SECTION IV-B
"LAUREL RIDGE"
DOCUMENT NO. 970019058
P.B. 67, PG. 99-101

COMMON AREA
PARCEL CA15
9,563.37 S.F.
0.2195 AC.

COMMON AREA
PARCEL CA20
8,226.67 S.F.
0.1889 AC.

TEMPORARY 50' RADIUS CUL-DE-SAC
EASEMENT TO BE EXTINGUISHED UPON
RECORDATION OF DEVELOPMENT AREA
ONE, PHASE 1, SECTION IV-C.

BMP
COMMON AREA
PARCEL CA16
39,169.15 S.F.
0.8992 AC.

MANAGED GRASS LINE

Radius: 460.00'
Delta: 112°32' 25"
Arc Length: 903.53'
Tangent: 688.96'
Chord: 765.13'
Course: N 31°02' 53" E

PARC
(12)
GOLF TRUST OF
HOLE N
DOCUMENT NO.

NOTES: WETLANDS AND LAND WIT-
SHALL REMAIN IN A NAUF
FOR THOSE ACTIVITIES PE
OF THE JAMES CITY COUN

NATURAL OPEN SPACE E
NATURAL UNDISTURBED S
REFERENCED ON THE DEE

ALL DRAINAGE EASEMENT
BE DEDICATED TO THE HO

SETBACK REQUIREMENTS
ARE SPECIFIED IN THE DE
FOR STONEHOUSE, VIRGIN
PUBLISHED BY THE ENVIR

IN ITS MEETING OF MAY
AN EXCEPTION TO THE SU
CUL-DE-SAC LENGTH OF

ALL OTHER UTILITIES, ELE
NATURAL GAS ETC. SHALL

VIRGINIA STATE PLANE COORDINATE SYSTEM (SOUTH ZONE) (NAD 83)

LOT 5

LOT 6

LOT 7

LOT 8

LOT 9

LOT 3

LOT 4

MOUNTAIN BERRY COURT

← SEE PROFILE "B" →

50' R/W

MOUNTAIN BERRY COURT

← SEE PROFILE "A" →

50' R/W

20' UTILITY EASEMENT (TYPICAL)

STA. 7+91 DEAD END BLOW-OFF ASSEMBLY

PROPOSED STREET LIGHT (TYP)

10' DRAINAGE AND UTILITY EASEMENT FOR USE BY JAMES CITY SERVICE AUTHORITY (TYP. ALL LOTS)

10' MIN. SEPARATION BETWEEN WATER AND SEWER MAINS

4" PVC LATERAL

SEE CUL-DE-SAC DETAIL SHEET 12

PROPOSED CLEARING LIMITS (TYP)

6" PVC LATERAL

PROPOSED 4" PVC WATERLINE

PROPOSED CG-12 (TYPICAL)

TC=94.27

TC=95.00

230.00' N01°25'05"E

PROP. ROLL TOP CURB (TYPICAL)

PROPOSED ROLL TOP CURB (TYPIC

12+78.8713

10' WIDE ACCESS & MAINTENANCE ROAD (SEE DETAIL SHEET 9)

DELINEATED WETLANDS

10' UTILITY EASEMENT (TYPICAL)

W.S.E. = 77.00

REFER TO SHEET 9 OF 14 FOR DETAIL

EXISTING TREE LINE

10' DRAINAGE AND UTILITY EASEMENT FOR USE BY JAMES CITY SERVICE AUTHORITY (TYP. ALL LOTS)

100 YEAR WATER SURFACE ELEVATION (W.S.E.) ELEVATION = 76.62

38' R. TO B.C.

37.5' R. TO B.C. (TYPICAL)

35' R. TO B.C. (TYPICAL)

10.5' (TYP) 29' (TYPICAL) BC + BC 50' R/W (TYP)

12+00

278.87' S88°34'55"E

PROPOSED 4' SIDEWALK (TYP)

8" PVC WATERLINE

WC042_STONEHOUSE_SEC_4C_PHASE1_010

| TEMPORARY SEDIMENT TRAP | TOP EMBANK. ELEVATION | WET SU ELEVA |
|---|---|---|
| ST-3 | 80.00 | 77.0 |

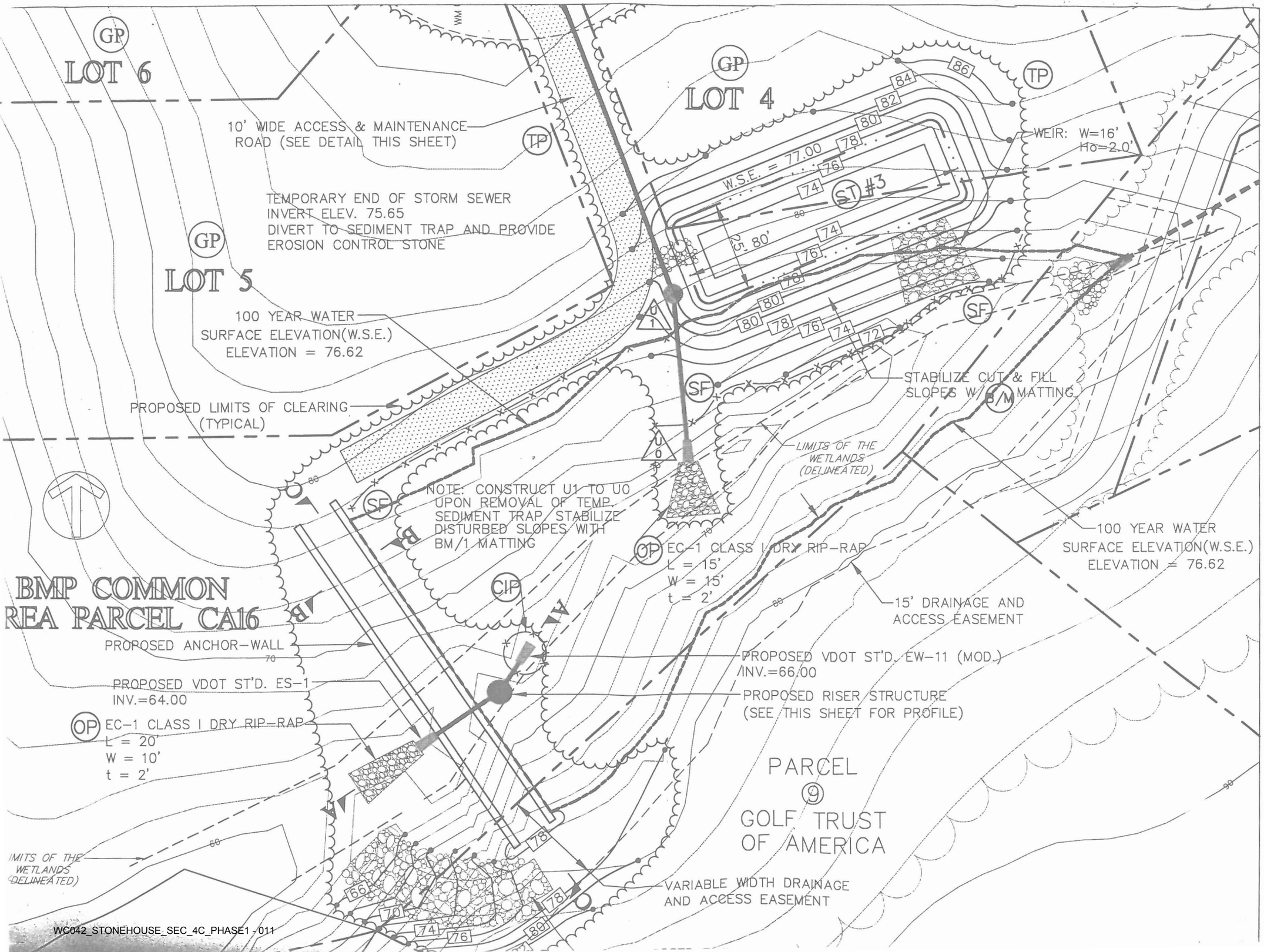


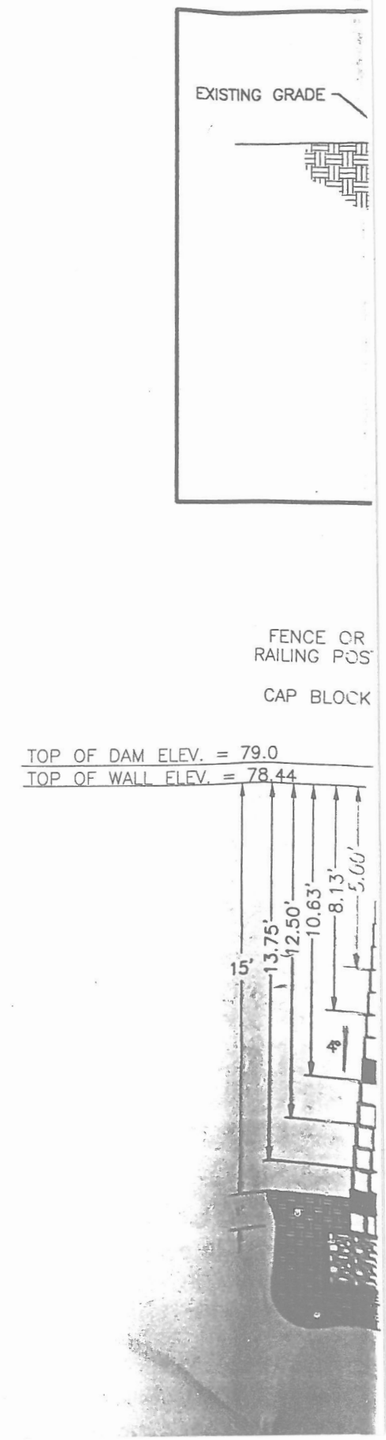

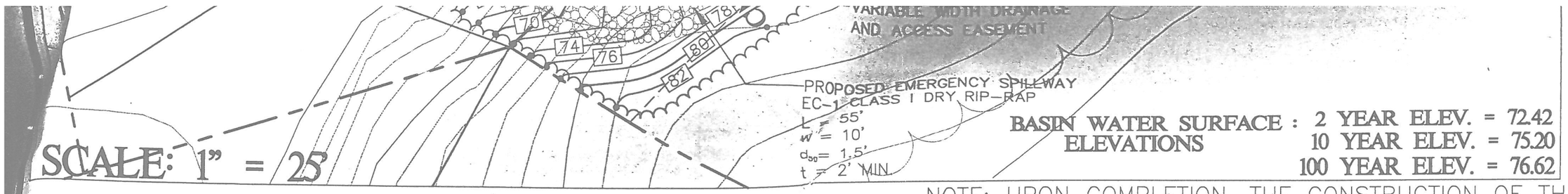


SCALE: 1" = 25'

BASIN WATER SURFACE ELEVATIONS: 2 YEAR ELEV. = 72.42
10 YEAR ELEV. = 75.20
100 YEAR ELEV. = 76.62

A

NOTE: UPON COMPLETION, THE CONSTRUCTION OF THE DAM WILL BE CERTIFIED BY A PROFESSIONAL ENGINEER WHO HAS INSPECTED THE STRUCTURE DURING CONSTRUCTION.

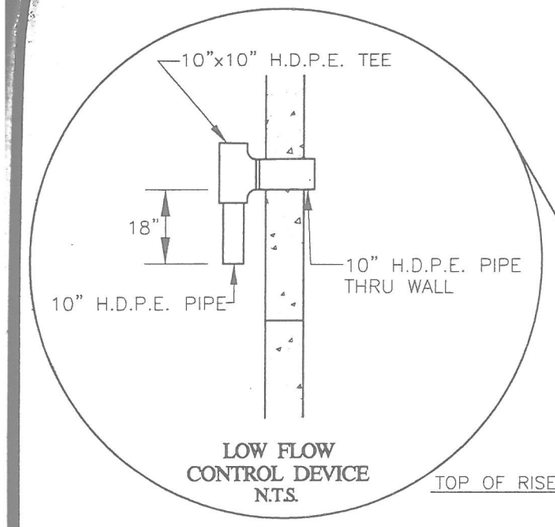


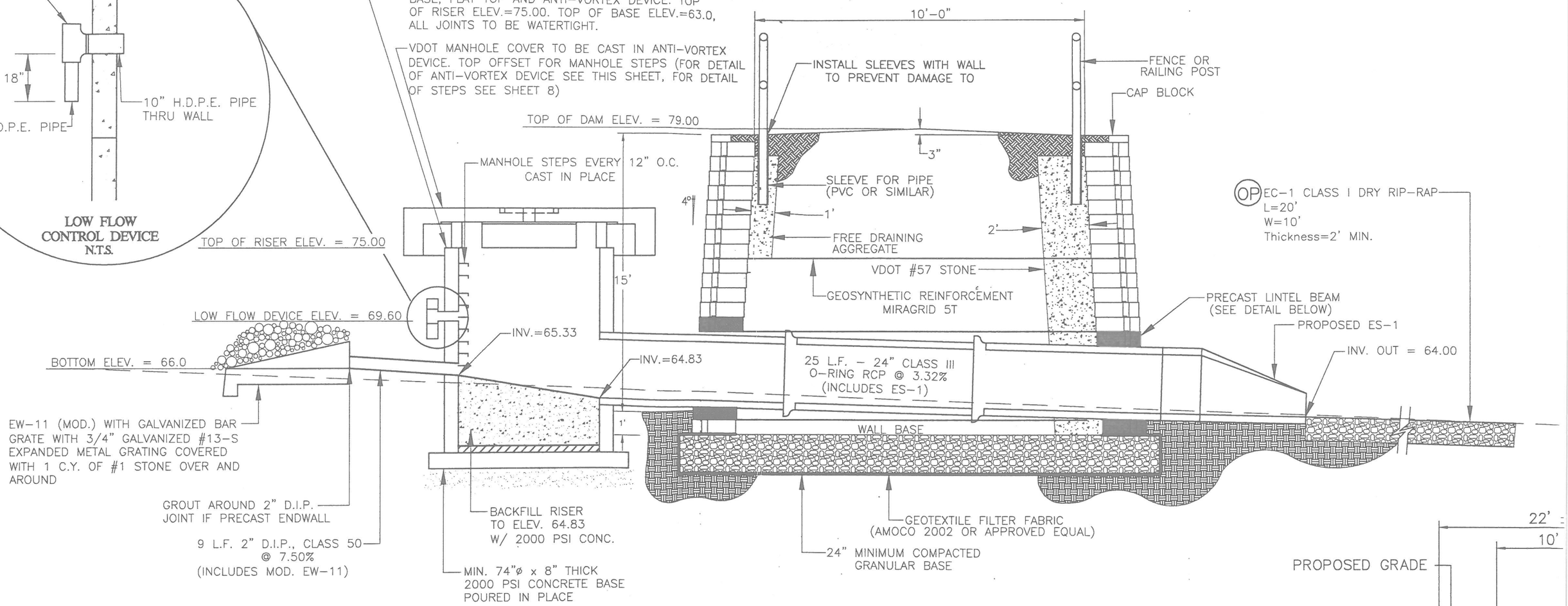


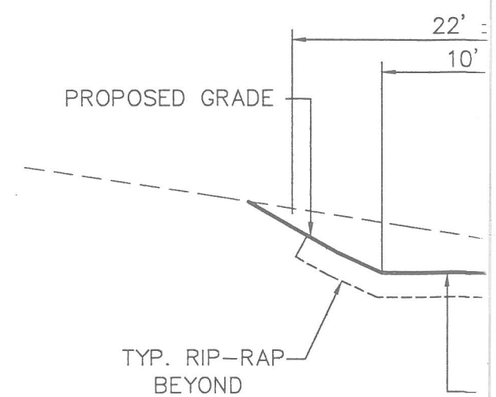


# SECTION A-A
# ANCHOR VERTICA PRO - WALL SECTION THRU OUTFALL

N.TS.

1.LINTEL BEAMS SHALL BE PRECAST WITH MIN. 7 DAYS CURE.
2.HEIGHT OF BEAM SHALL CORRESPOND TO HEIGHT OF MODULAR UNITS.
3.PLACE LINTEL ON COURSE ABOVE DRAINAGE PIPE. INSTALL DRAINAGE PIPE PRIOR TO CONSTRUCTION OF WALL ABOVE.
4.GEOTEXTILE FABRIC SHALL BE INSTALLED AROUND PIPE OPENING.
5.LINTEL TO EXTEND MINIMUM 18" EITHER SIDE OF OPENING.

**NOTE: THE VIRGINIA DEPARTMENT OF TRANSPORTATION DOES NOT ASSUME RESPONSIBILITY FOR MAINTENANCE OF THE RETENTION POND OR IT'S STRUCTURES, AND SHALL BE SAVED HARMLESS FROM ANY DAMAGE.**

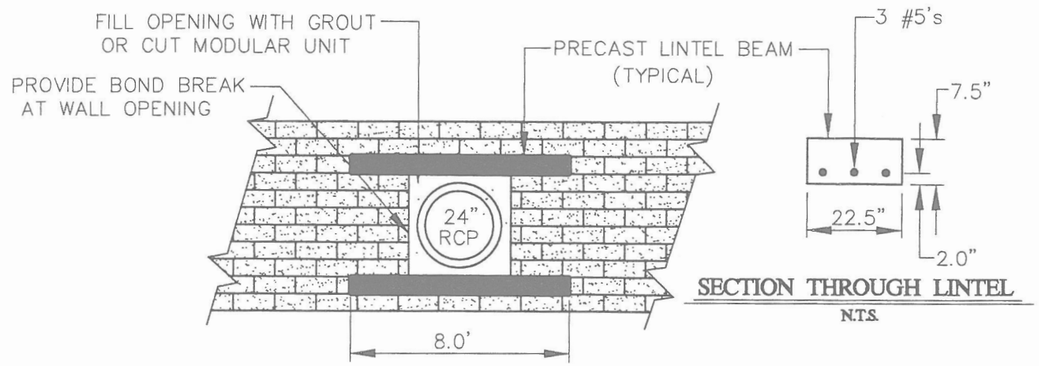


# PRECAST LINTEL DETAIL

N.T.S.

| PANEL NUMBER | NUMBER OF BLOCKS (HEIGHT) | ELE |
|---|---|---|
| 1 | 3 | |
| 2 | 5 | |
| 3 | 13 | |
| 4 | 17 | |
| 5 | 23 | |
| 6 | 24 | |
| 7 | 24 | |
| 8 | 24 | |
| 9 | 24 | |
| 10 | 23 | |
| 11 | 17 | |
| 12 | 16 | |
| 13 | 14 | |
| 14 | 11 | |
| 15 | 9 | |
| 16 | 7 | |
| 17 | 5 | |
| 18 | 3 | |

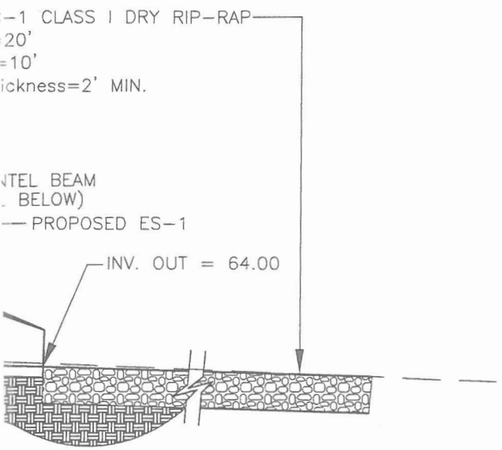


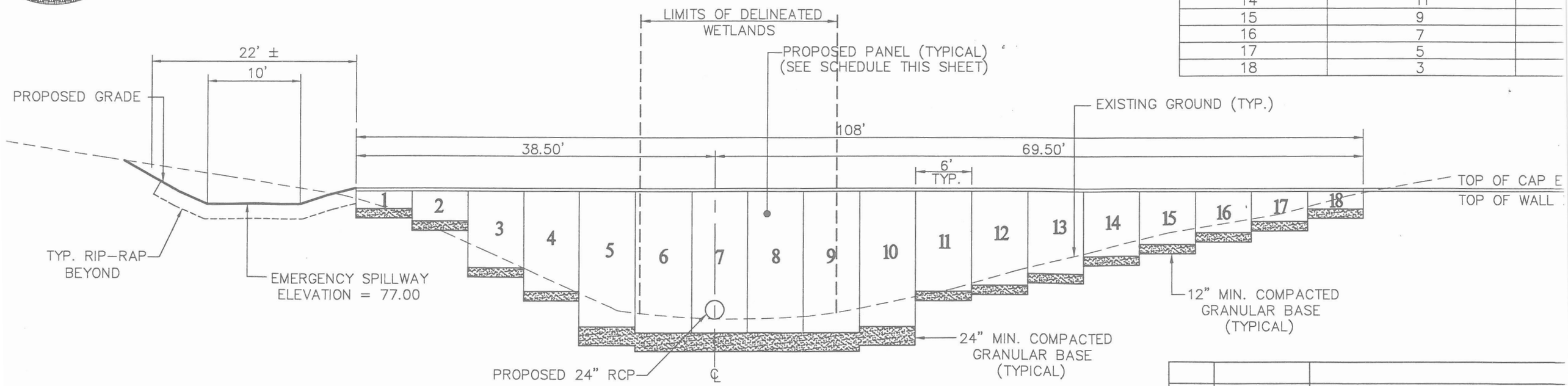


# SECTION C-C

SCALE: 1" = 10' HORIZONTAL
1" = 10' VERTICAL

| NO. | DATE | REVISION |
|---|---|---|
| | | |
| | | |
| | | |
| | | |
| 2 | 8/20/98 | PER J.C.C. COMMENTS |
| 1 | 5/29/98 | PER J.C.C. COMMENTS |

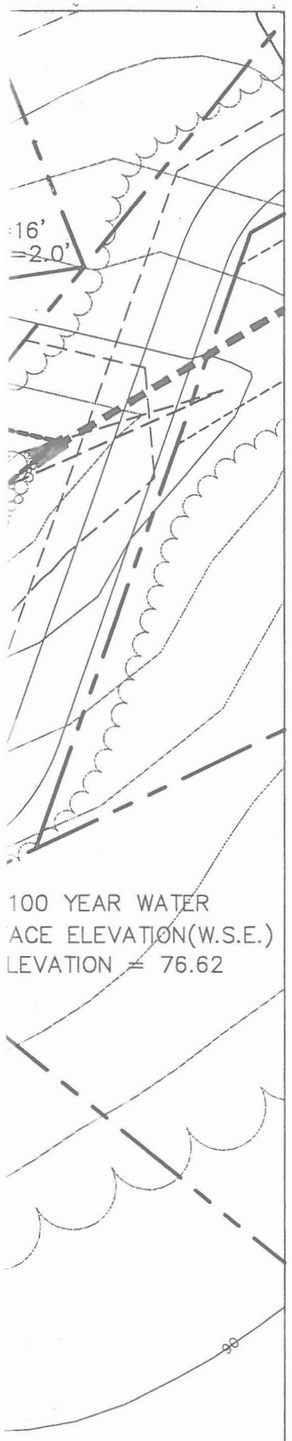


| TEMPORARY SEDIMENT TRAP | TOP EMBANK. ELEVATION | WET SURFACE ELEVATION | BOTTOM ELEVATION | Ho | SEDIMENT TRAP DRAINAGE AREA | WET/DRY STORAGE REQ'D. | WET STORAGE PROVIDED | DRY STORAGE PROVIDED |
|---|---|---|---|---|---|---|---|---|
| ST-3 | 80.00 | 77.00 | 73.50 | 2.0 | 2.64 Ac. | 177 C.Y.<br>4779 C.F. | 177 C.Y.<br>4779 C.F. | > 200 C.Y.<br>> 5400 C.F. |

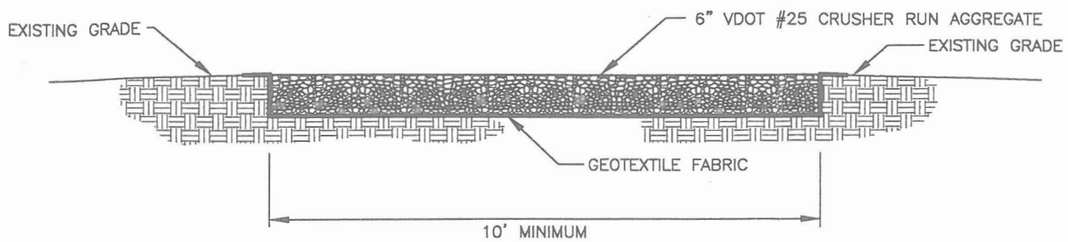


## ACCESS AND MAINTENANCE ROAD DETAIL

NOT TO SCALE

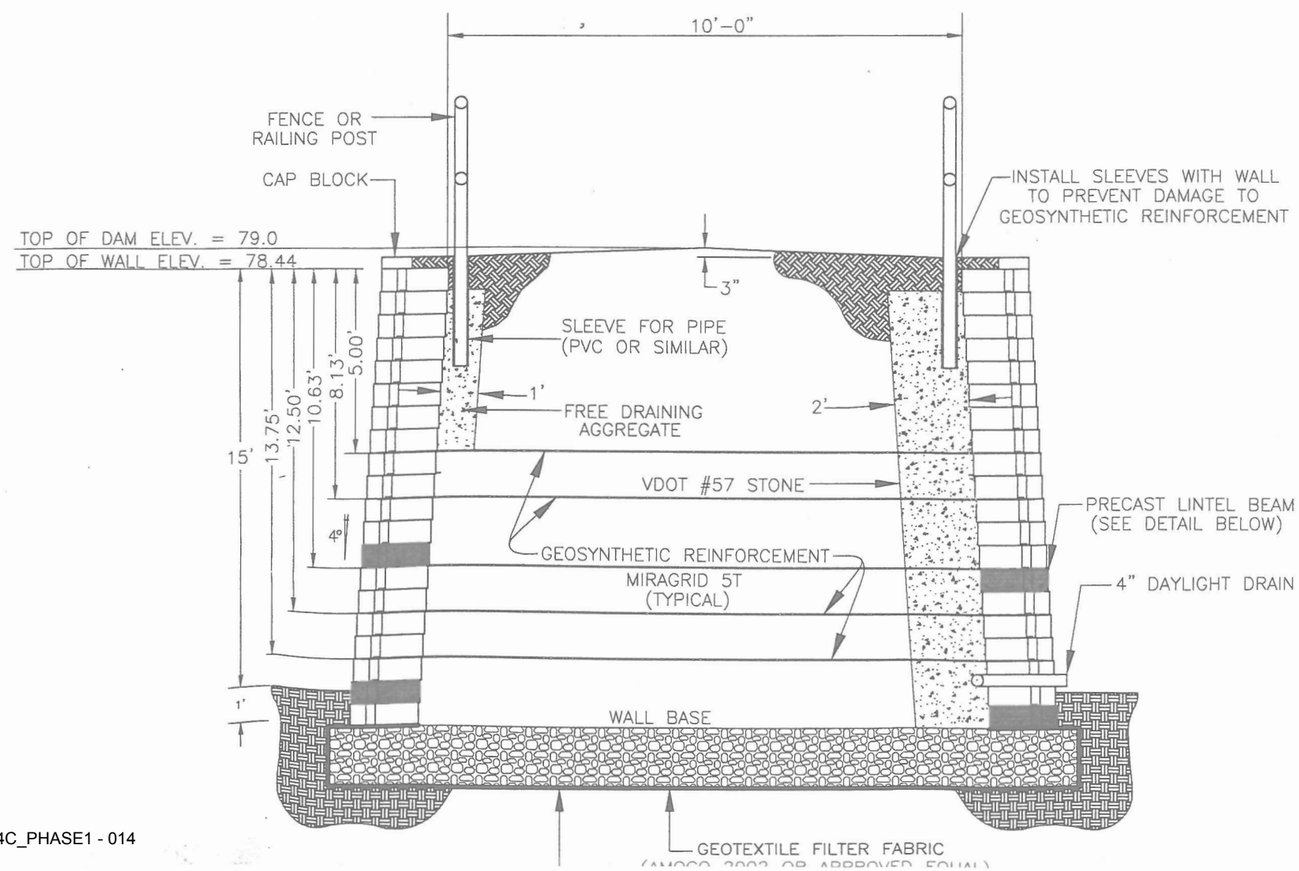


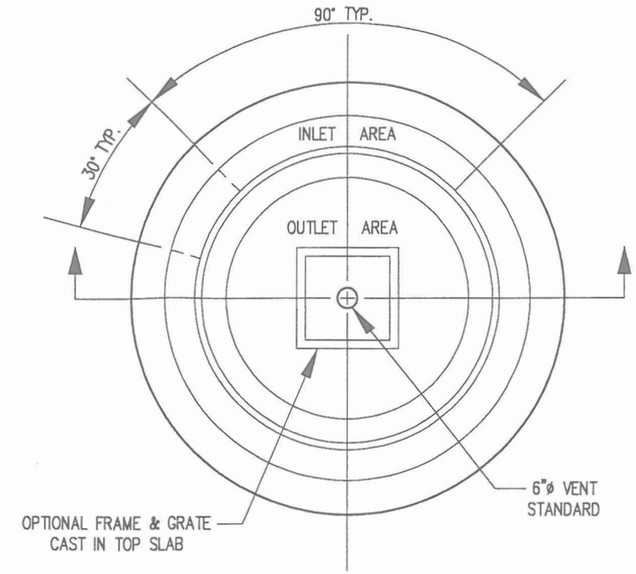


## PLAN

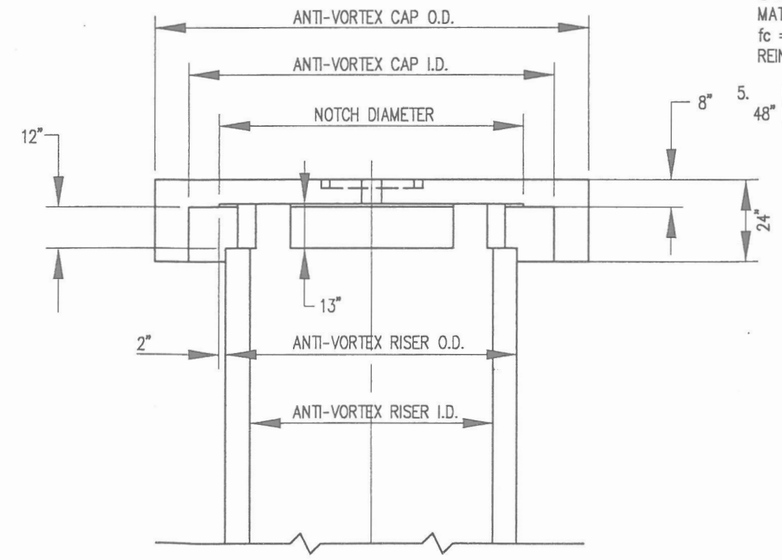


## SECTION

| RISER | |
|---|---|
| I.D. | O.D |
| 24" | 30 |
| 27" | 33-1 |
| 30" | 37 |
| 36" | 44 |
| 42" | 51 |
| 48" | 58 |
| 54" | 66-1 |
| 60" | 72 |
| 66" | 80-1 |
| 72" | 86 |
| 78" | 94-1 |
| 84' | 10 |

NOTE:
1. A MANU
2. D VARI
3. IN AND OUTL
4. S #4 E REIN 2 x MATI fc = REIN
5. [ 48" I

## ANTI-VORTEX DEVICE I

N.T.S.

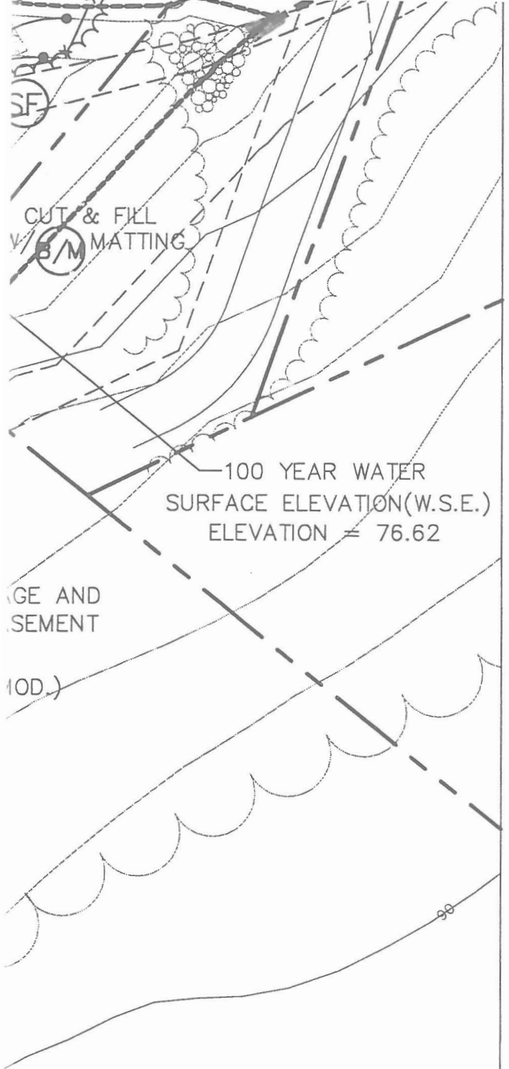


RFACE : 2 YEAR ELEV. = 72.42
10 YEAR ELEV. = 75.20
100 YEAR ELEV. = 76.62

N, THE CONSTRUCTION OF THE DAM WILL BE
ESSIONAL ENGINEER WHO HAS INSPECTED
NG CONSTRUCTION.

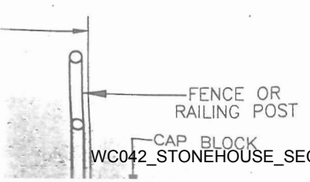


WC042_STONEHOUSE_SEC_4C_PHASE1 - 015

## ACCESS AND MAINTENANCE ROAD DETAIL

NOT TO SCALE

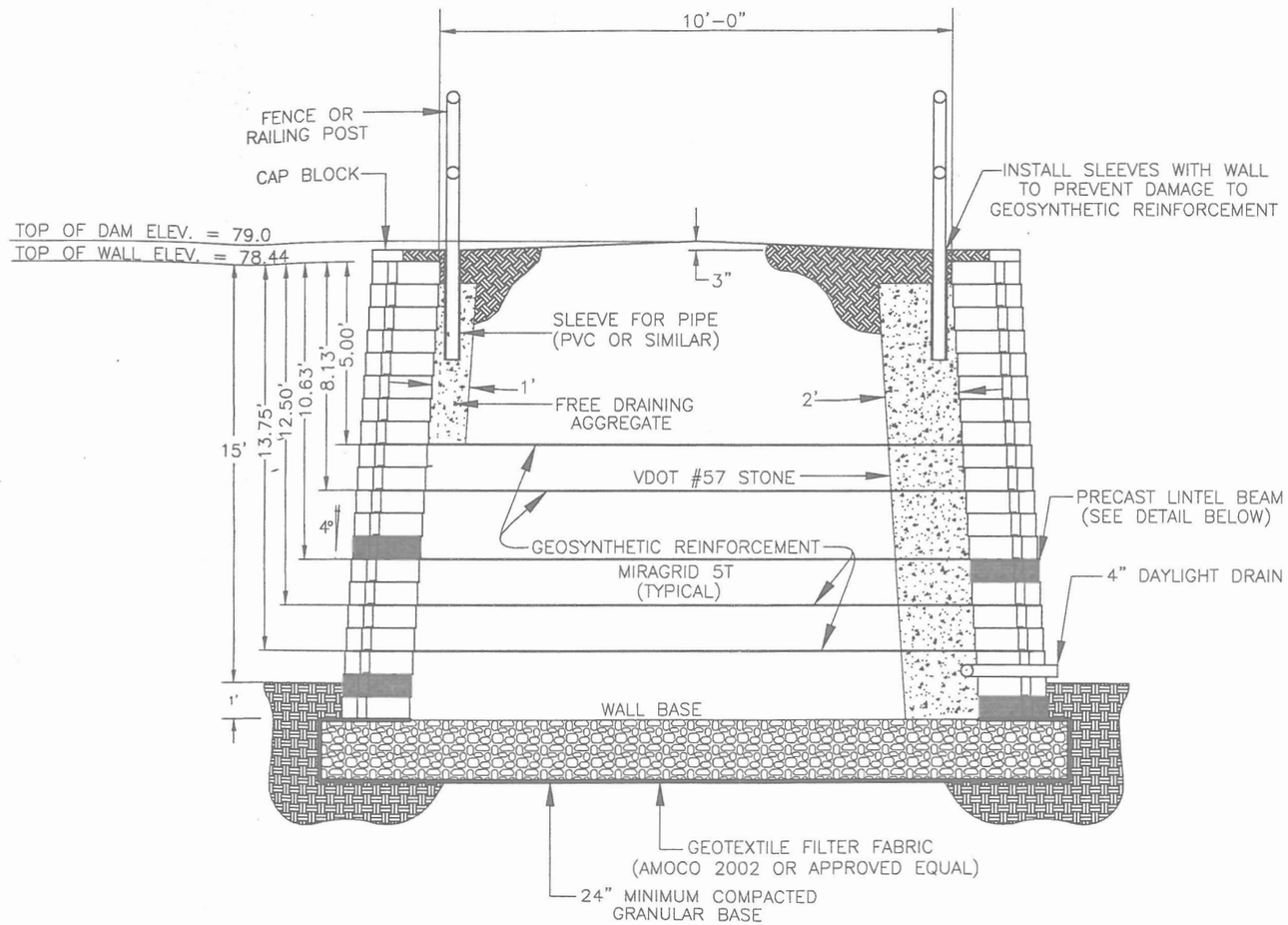


## SECTION B-B
## ANCHOR VERTICA PRO - WALL SECTION

N.T.S.

1. LINTEL BEAMS SHALL BE PRECAST WITH MIN. 7 DAYS CURE.
2. HEIGHT OF BEAM SHALL CORRESPOND TO HEIGHT OF MODULAR UNITS.
3. PLACE LINTEL ON COURSE ABOVE DRAINAGE PIPE. INSTALL DRAINAGE PIPE PRIOR TO CONSTRUCTION OF WALL ABOVE.
4. GEOTEXTILE FABRIC SHALL BE INSTALLED AROUND PIPE OPENING.
5. LINTEL TO EXTEND MINIMUM 18" EITHER SIDE OF OPENING.

FILL OPENING WITH GROUT

3 #5's

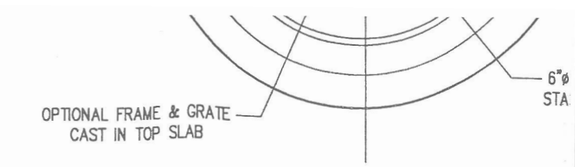


## PLAN

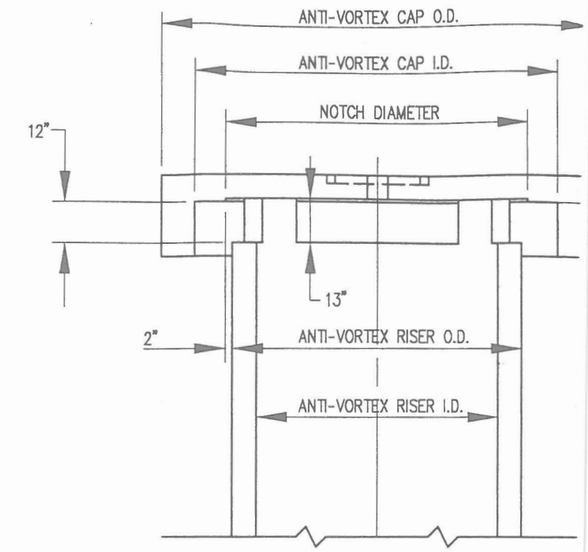


## SECTION

## ANTI-VORTEX

NOTE: THE VIRGINIA DEPARTMENT
DOES NOT ASSUME RESPONSIBILI
OF THE RETENTION POND OR IT
SHALL BE SAVED HARMLESS FRO

FACE : 2 YEAR ELEV. = 72.42
10 YEAR ELEV. = 75.20
100 YEAR ELEV. = 76.62

, THE CONSTRUCTION OF THE DAM WILL BE
SSIONAL ENGINEER WHO HAS INSPECTED
G CONSTRUCTION.

1'-24" MINIMUM COMPACTED GRANULAR BASE

## SECTION B-B
## ANCHOR VERTICA PRO - WALL SECTION

N.T.S.

NOTE: THE VIRGINIA DEPARTMENT
DOES NOT ASSUME RESPONSIBILITY
OF THE RETENTION POND OR IT'S
SHALL BE SAVED HARMLESS FROM

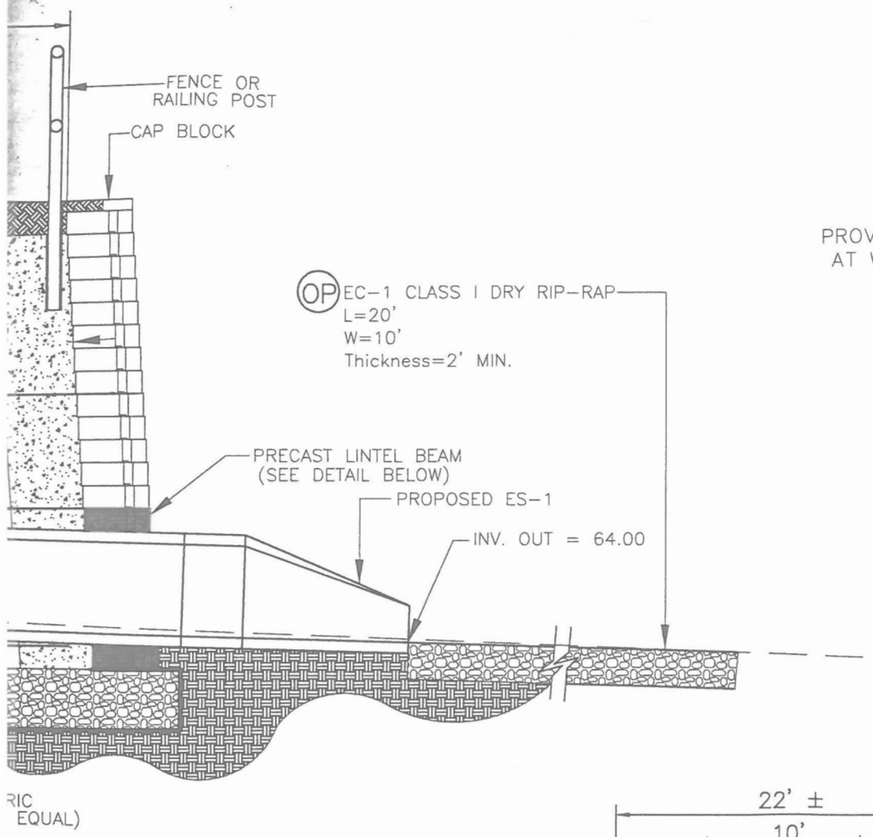


1. LINTEL BEAMS SHALL BE PRECAST WITH MIN. 7 DAYS CURE.
2. HEIGHT OF BEAM SHALL CORRESPOND TO HEIGHT OF MODULAR UNITS.
3. PLACE LINTEL ON COURSE ABOVE DRAINAGE PIPE. INSTALL DRAINAGE PIPE PRIOR TO CONSTRUCTION OF WALL ABOVE.
4. GEOTEXTILE FABRIC SHALL BE INSTALLED AROUND PIPE OPENING.
5. LINTEL TO EXTEND MINIMUM 18" EITHER SIDE OF OPENING.

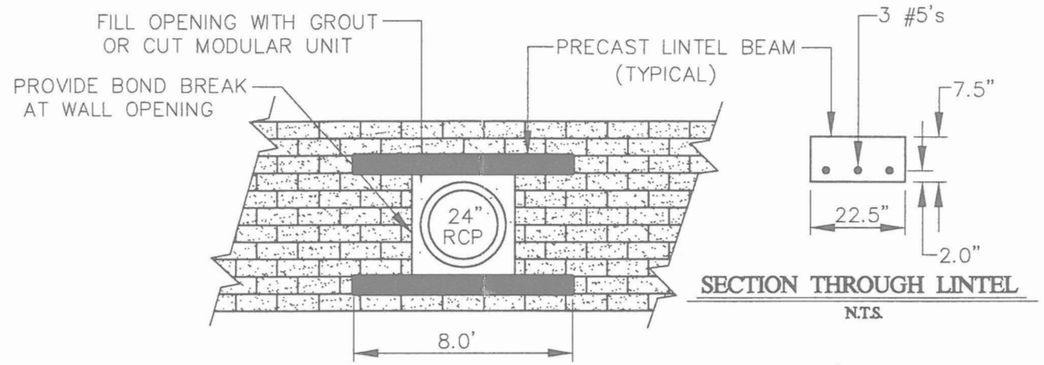


SECTION THROUGH LINTEL
N.T.S.

# PRECAST LINTEL DETAIL

N.T.S.

| PANEL NUMBER |
|---|
| 1 |
| 2 |
| 3 |
| 4 |
| 5 |
| 6 |
| 7 |
| 8 |
| 9 |
| 10 |
| 11 |
| 12 |
| 13 |
| 14 |
| 15 |
| 16 |
| 17 |
| 18 |

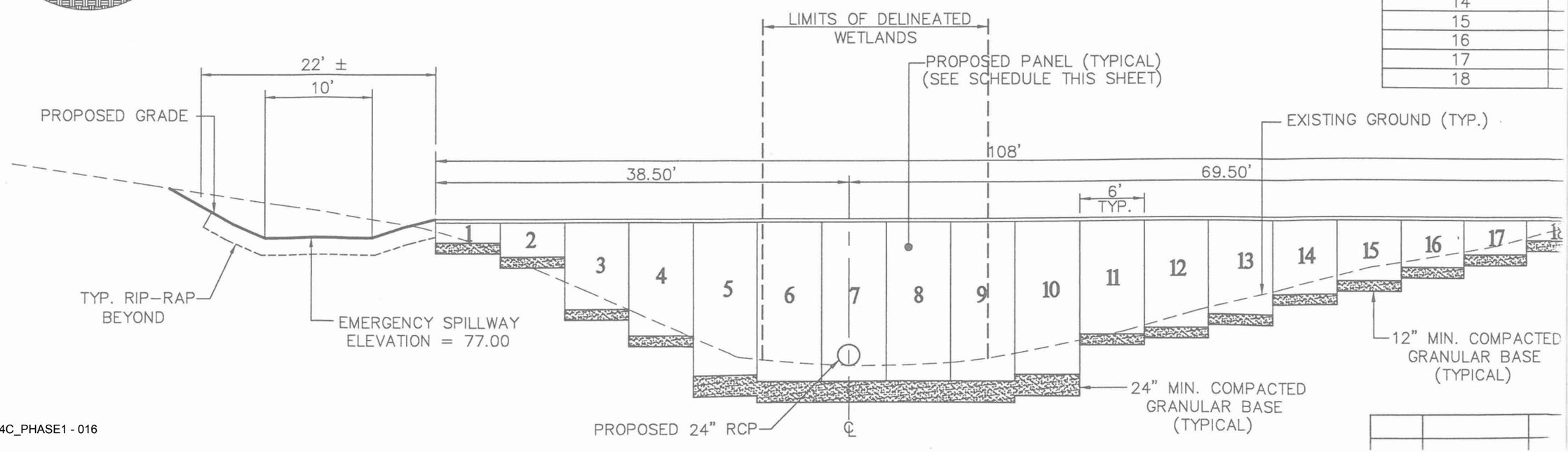

| BOTTOM ELEVATION | Ho | SEDIMENT TRAP DRAINAGE AREA | WET/DRY STORAGE REQ'D. | WET STORAGE PROVIDED | DRY STORAGE PROVIDED |
|---|---|---|---|---|---|
| 73.50 | 2.0 | 2.64 Ac. | 177 C.Y.<br>4779 C.F. | 177 C.Y.<br>4779 C.F. | > 200 C.Y.<br>> 5400 C.F. |

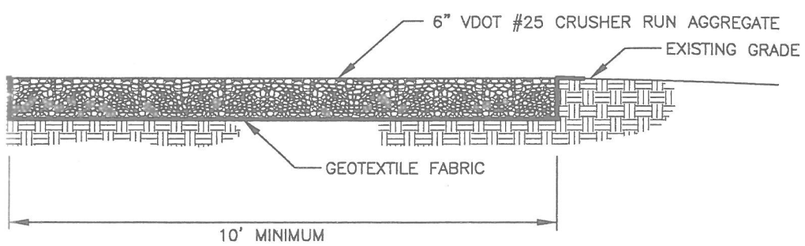


## CESS AND MAINTENANCE ROAD DETAIL

NOT TO SCALE

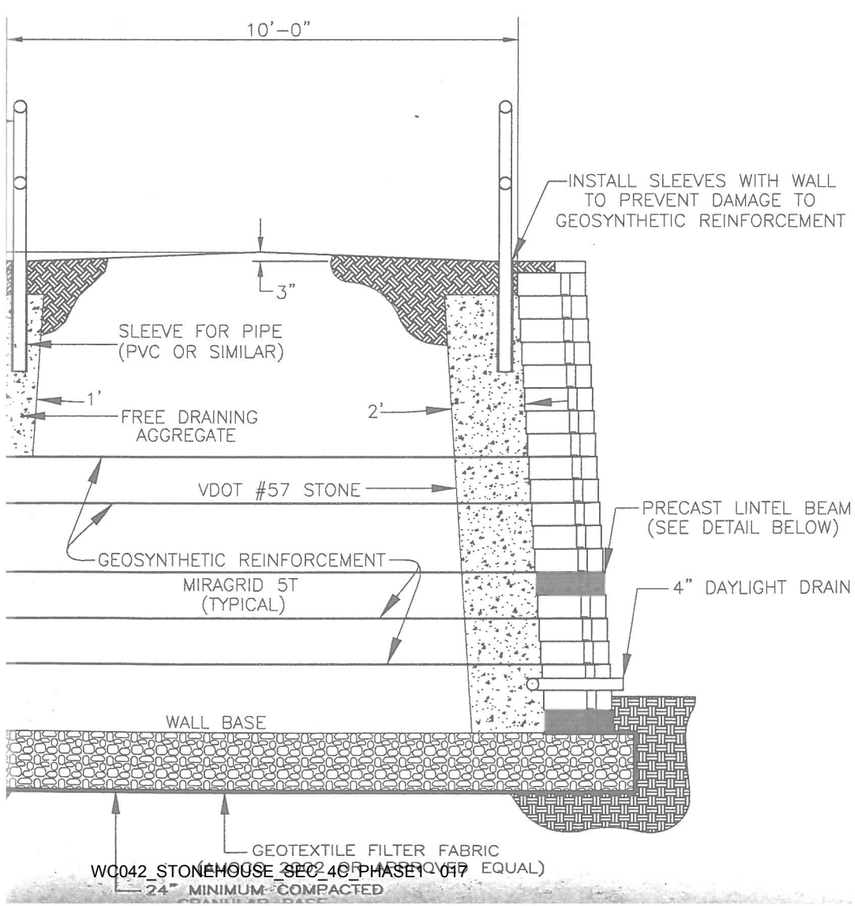


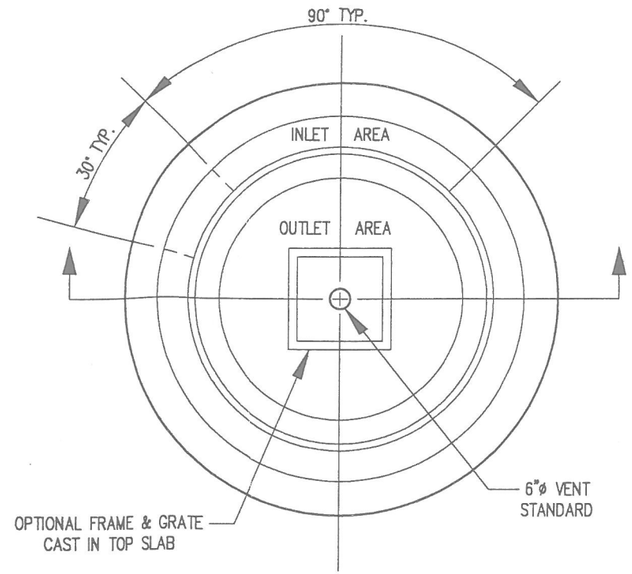


## PLAN

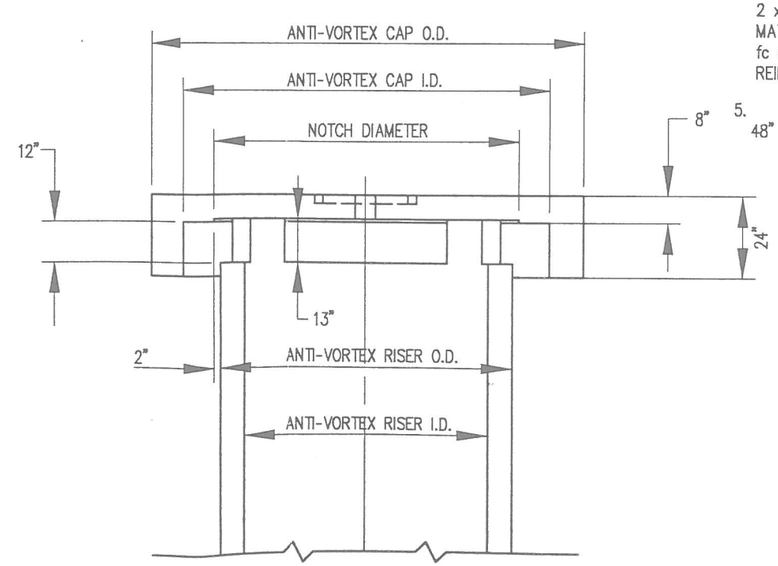


## SECTION

| RISER | | ANTI-VORTEX CAP | | NOTCH DIAMETER | APPROX. CAP WEIGHT |
|---|---|---|---|---|---|
| I.D. | O.D. | I.D. | O.D. | | |
| 24" | 30" | 48" | 58" | 34" | 1.49 T |
| 27" | 33-1/2" | 60" | 70" OR 72" | 37-1/2" | 2.28 T |
| 30" | 37" | 60" | 70" OR 72" | 41" | 2.26 T |
| 36" | 44" | 60" | 70" OR 72" | 48" | 2.22 T |
| 42" | 51" | 72" | 86" | 55" | 3.16 T |
| 48" | 58" | 84" | 100" | 62" | 4.27 T |
| 54" | 66-1/2" | 84" | 100" | 70-1/2" | 4.20 T |
| 60" | 72" | 96" | 114" | 76" | 5.48 T |
| 66" | 80-1/2" | 96" | 114" | 84-1/2" | 5.39 T |
| 72" | 86" | 108" | 128" | 90" | 6.83 T |
| 78" | 94-1/2" | 126" | 147" | 98-1/2" | 8.97 T |
| 84" | 100" | 126" | 147" | 104" | 8.90 T |

NOTE:

1. ANTI-VORTEX DEVICE (CAP AND RISER) MANUFACTURED IN ACCORDANCE WITH ASTM C478.
2. DIMENSIONS SUBJECT TO PERMISSIBLE VARIATIONS OF ASTM C478.
3. INLET AREA (AREA BETWEEN DEVICE I.D. AND RISER O.D.) IS GREATER THAN OUTLET AREA (AREA OF RISER I.D.).
4. SLAB REIFORCEMENT TO BE ASTM A615 #4 BARS @ 8" E.W. CIRCUMFERENCIAL REINFORCEMENT TO BE Asc = 1 @ 0.150 2 x 6 W2.5 x W2.5 WWF MINIMUM. MATERIAL PROPERTIES: fy = 60 kei. fc = 4 ksi. CONCRETE COVER OVER REINFORCEMENT (CCOR) = 1", UNLESS NOTED.
5. DI-1 FRAME & GRATE IS UNAVAILABLE FOR 48" I.D. RISERS AND LARGER.

## ANTI-VORTEX DEVICE DETAIL

N.T.S.

COMMONWEALTH OF VIRGINIA
RICHARD S. PHILLIPS
No. 023631
PROFESSIONAL ENGINEER

Langley and McDonald, P.C.
Engineers • Surveyors • Planners
Landscape Architects • Environmental Consultants
VIRGINIA BEACH WILLIAMSBURG

# DRAINAGE,

# STORMWATER MANAGEMENT, SHEET PILE

# EROSION CONTROL, AND PAVEMENT DESIGN

# CALCULATIONS

**FOR**

# STONEHOUSE L.L.C.

# DEVELOPMENT AREA ONE, PHASE I
# SECTION IVC

**February 27, 1998**

WC 042
5-12-98
BLOCK WALL
LAVREL RIDGE
SEC 4C PH 2


Langley and McDonald, P.C.

Engineers
Surveyors
Planners
Landscape Architects
Environmental Consultants

5544 Greenwich Road, Virginia Beach, VA 23462
(804) 473-2000 FAX: (804) 497-7933

201 Packets Court, Williamsburg, VA 23185
(804) 253-2975 FAX: (804) 229-0049

# TABLE OF CONTENTS


- EXISTING CONDITION
    - DRAINAGE AREA MAP
    - RUNOFF CURVE NUMBERS
    - TC COMPUTATIONS AND INFLOW HYDROGRAPH
- FUTURE CONDITION
    - DRAINAGE AREA MAP
    - RUNOFF CURVE NUMBERS
    - TC COMPUTATIONS AND INFLOW HYDROGRAPH
- TEMPORARY SEDIMENT TRAP DESIGN
- ENVIRONMENTAL INVENTORY
- STORM SEWER CALCULATIONS
- STORMWATER INLET CALCULATIONS
- PAVEMENT DESIGN CALCULATIONS
    - RIDGE DRIVE EXTENSION
    - ROADS “A” & “B”

# EXISTING CONDITION

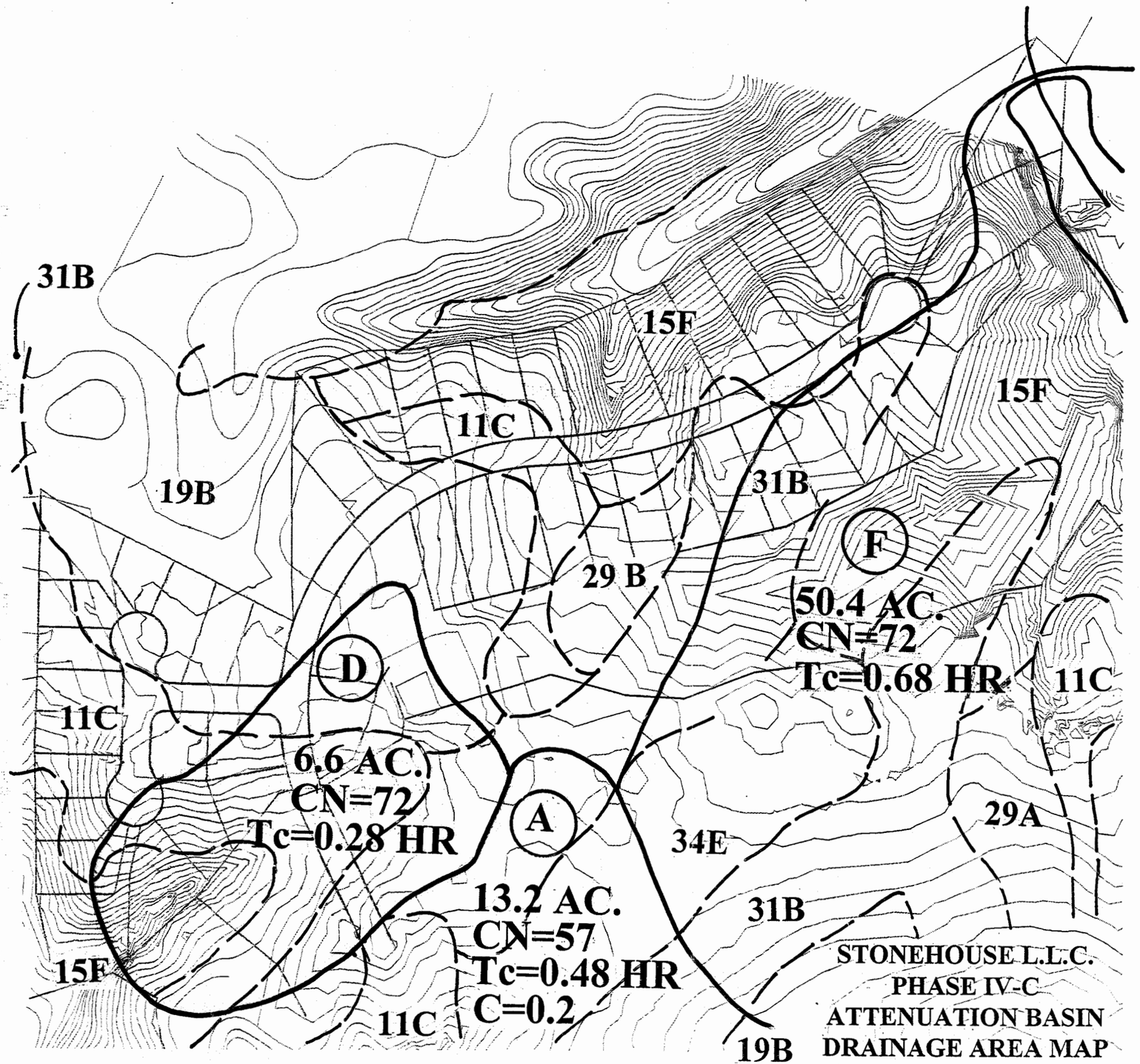
31B
15F
15F
11C
19B
31B
F
29 B
50.4 AC.
CN=72
Tc=0.68 HR
D
11C
11C
6.6 AC.
CN=72
Tc=0.28 HR
A
29A
34E
13.2 AC.
CN=57
Tc=0.48 HR
C=0.2
31B
15F
11C
19B
STONEHOUSE L.L.C.
PHASE IV-C
ATTENUATION BASIN
DRAINAGE AREA MAP
PRE-DEVELOPMENT

Quick TR-55 Ver.5.46 S/N:
Executed: 10:31:34 01-29-1998

STONEHOUSE
SECTION IVC ATTENUATION BASIN
EXISTING CONDITIONS

RUNOFF CURVE NUMBER SUMMARY

::::::::::::::::::::::::::::::::::::::::::::::::::::::::::::::::::::::::

| Subarea Description | Area (acres) | CN (weighted) |
|---|---|---|
| | 6.60 | 72 |

Quick TR-55 Ver.5.46 S/N:
Executed: 10:31:34 01-29-1998

STONEHOUSE
SECTION IVC ATTENUATION BASIN
EXISTING CONDITIONS

RUNOFF CURVE NUMBER DATA

::::::::::::::::::::::::::::::::::::::::::::::::::::::::::::::::::::::::

Composite Area:

| SURFACE DESCRIPTION | AREA (acres) | CN | |
|---|---|---|---|
| WOODS | 2.70 | 70 | |
| OPEN/GOLF COURSE | 3.90 | 74 | |
| COMPOSITE AREA ---> | 6.60 | 72.4 | ( 72 ) |

::::::::::::::::::::::::::::::::::::::::::::::::::::::::

Quick TR-55 Ver.5.46 S/N:
Executed: 10:31:10 01-29-1998 C:\96038\BMPS\IVA-2\IVC-EX.TCT

STONEHOUSE
SECTION IVC ATTENUATION BASIN
EXISTING CONDITIONS

Tc COMPUTATIONS FOR:

SHEET FLOW (Applicable to Tc only)

| | | | |
|---|---|---|---|
| Segment ID | | | |
| Surface description | | GRASS | |
| Manning's roughness coeff., n | | 0.2400 | |
| Flow length, L (total < or = 300) | ft | 70.0 | short length |
| Two-yr 24-hr rainfall, P2 | in | 3.400 | |
| Land slope, s | ft/ft | 0.0100 | |

$$T = \frac{.007 * (n*L)^{0.8}}{P2^{0.5} * s^{0.4}}$$ hrs 0.23 = 0.23

SHALLOW CONCENTRATED FLOW

| | | | | | |
|---|---|---|---|---|---|
| Segment ID | | | | | |
| Surface (paved or unpaved)? | | Unpaved | Unpaved | | |
| Flow length, L | ft | 520.0 | 180.0 | | |
| Watercourse slope, s | ft/ft | 0.0600 | 0.0300 | | |
| Avg.V = Csf * (s)$^{0.5}$ | ft/s | 3.9521 | 2.7946 | | |
| where: Unpaved Csf = 16.1345 | | | | | |
| Paved Csf = 20.3282 | | | | | |
| T = L / (3600*V) | hrs | 0.04 | + 0.02 | = | 0.05 |

CHANNEL FLOW

| | | | |
|---|---|---|---|
| Segment ID | | | |
| Cross Sectional Flow Area, a | sq.ft | 0.00 | |
| Wetted perimeter, Pw | ft | 0.00 | |
| Hydraulic radius, r = a/Pw | ft | 0.000 | |
| Channel slope, s | ft/ft | 0.0000 | |
| Manning's roughness coeff., n | | 0.0000 | |

$$V = \frac{1.49 * r^{2/3} * s^{1/2}}{n}$$ ft/s 0.0000

| | | | | | |
|---|---|---|---|---|---|
| Flow length, L | ft | 0 | | | |
| T = L / (3600*V) | hrs | 0.00 | | = | 0.00 |

::::::::::::::::::::::::::::::::::::::::::::::::::::::::::::::::::::::::::::::::

TOTAL TIME (hrs) 0.28

seems low

Quick TR-55 Ver.5.46 S/N:
Executed: 10:31:10 01-29-1998 C:\96038\BMPS\IVA-2\IVC-EX.TCT

SUMMARY SHEET FOR Tc or Tt COMPUTATIONS
(Solved for Time using TR-55 Methods)

STONEHOUSE
SECTION IVC ATTENUATION BASIN
EXISTING CONDITIONS

| Subarea descr. | Tc or Tt | Time (hrs) |
|---|---|---|
| | Tc | 0.28 |

Return Frequency: 2 years

TR-55 TABULAR HYDROGRAPH METHOD
Type II. Distribution
(24 hr. Duration Storm)

Executed: 01-29-1998 10:30:38
Watershed file: --> C:\96038\BMPS\IVA-2\EXIST .MOP
Hydrograph file: --> C:\96038\BMPS\IVA-2\EX-2.HYD

STONEHOUSE SECTION IVC
STORMWATER MANAGEMENT FACILITY
EXISTING CONDITIONS

>>>> Input Parameters Used to Compute Hydrograph <<<<

| Subarea Description | AREA (acres) | CN | Tc (hrs) | * Tt (hrs) | Precip. (in) | Runoff (in) | Ia/p input/used | |
|---|---|---|---|---|---|---|---|---|
| | 6.60 | 72.0 | 0.30 | 0.00 | 3.36 | 1.03 | I.23 | .23 |

* Travel time from subarea outfall to composite watershed outfall point.
I -- Subarea where user specified interpolation between Ia/p tables.

Total area = 6.60 acres or 0.01031 sq.mi
Peak discharge = 6 cfs

>>>> Computer Modifications of Input Parameters <<<<<

| Subarea Description | Input Values Tc (hr) | Input Values * Tt (hr) | Rounded Values Tc (hr) | Rounded Values * Tt (hr) | Ia/p Interpolated (Yes/No) | Ia/p Messages |
|---|---|---|---|---|---|---|
| | 0.28 | 0.00 | 0.30 | 0.00 | Yes | -- |

* Travel time from subarea outfall to composite watershed outfall point.

Return Frequency: 2 years

TR-55 TABULAR HYDROGRAPH METHOD
Type II. Distribution
(24 hr. Duration Storm)

Executed: 01-29-1998 10:30:38
Watershed file: --> C:\96038\BMPS\IVA-2\EXIST .MOP
Hydrograph file: --> C:\96038\BMPS\IVA-2\EX-2.HYD

STONEHOUSE SECTION IVC
STORMWATER MANAGEMENT FACILITY
EXISTING CONDITIONS

>>>> Summary of Subarea Times to Peak <<<<

| Subarea | Peak Discharge at Composite Outfall (cfs) | Time to Peak at Composite Outfall (hrs) |
|---|---|---|
| | 6 | 12.2 |
| Composite Watershed | 6 | 12.2 |

Return Frequency: 2 years

TR-55 TABULAR HYDROGRAPH METHOD
Type II. Distribution
(24 hr. Duration Storm)

Executed: 01-29-1998 10:30:38
Watershed file: --> C:\96038\BMPS\IVA-2\EXIST .MOP
Hydrograph file: --> C:\96038\BMPS\IVA-2\EX-2.HYD

STONEHOUSE SECTION IVC
STORMWATER MANAGEMENT FACILITY
EXISTING CONDITIONS

Composite Hydrograph Summary (cfs)

| Subarea Description | 11.0 hr | 11.3 hr | 11.6 hr | 11.9 hr | 12.0 hr | 12.1 hr | 12.2 hr | 12.3 hr | 12.4 hr |
|---|---|---|---|---|---|---|---|---|---|
| | 0 | 0 | 0 | 1 | 1 | 3 | 6 | 6 | 5 |
| Total (cfs) | 0 | 0 | 0 | 1 | 1 | 3 | 6 | 6 | 5 |

| Subarea Description | 12.5 hr | 12.6 hr | 12.7 hr | 12.8 hr | 13.0 hr | 13.2 hr | 13.4 hr | 13.6 hr | 13.8 hr |
|---|---|---|---|---|---|---|---|---|---|
| | 3 | 2 | 2 | 1 | 1 | 1 | 1 | 1 | 1 |
| Total (cfs) | 3 | 2 | 2 | 1 | 1 | 1 | 1 | 1 | 1 |

| Subarea Description | 14.0 hr | 14.3 hr | 14.6 hr | 15.0 hr | 15.5 hr | 16.0 hr | 16.5 hr | 17.0 hr | 17.5 hr |
|---|---|---|---|---|---|---|---|---|---|
| | 1 | 0 | 0 | 0 | 0 | 0 | 0 | 0 | 0 |
| Total (cfs) | 1 | 0 | 0 | 0 | 0 | 0 | 0 | 0 | 0 |

| Subarea Description | 18.0 hr | 19.0 hr | 20.0 hr | 22.0 hr | 26.0 hr |
|---|---|---|---|---|---|
| | 0 | 0 | 0 | 0 | 0 |
| Total (cfs) | 0 | 0 | 0 | 0 | 0 |

Return Frequency: 10 years

TR-55 TABULAR HYDROGRAPH METHOD
Type II. Distribution
(24 hr. Duration Storm)

Executed: 01-29-1998 10:30:38
Watershed file: --> C:\96038\BMPS\IVA-2\EXIST .MOP
Hydrograph file: --> C:\96038\BMPS\IVA-2\EX-10.HYD

STONEHOUSE SECTION IVC
STORMWATER MANAGEMENT FACILITY
EXISTING CONDITIONS

>>>> Input Parameters Used to Compute Hydrograph <<<<

| Subarea Description | AREA (acres) | CN | Tc (hrs) | * Tt (hrs) | Precip. (in) | Runoff (in) | Ia/p input/used |
|---|---|---|---|---|---|---|---|
| | 6.60 | 72.0 | 0.30 | 0.00 | 5.04 | 2.23 | I.15 .15 |

* Travel time from subarea outfall to composite watershed outfall point.
I -- Subarea where user specified interpolation between Ia/p tables.

Total area = 6.60 acres or 0.01031 sq.mi
Peak discharge = 15 cfs

>>>> Computer Modifications of Input Parameters <<<<<

| Subarea Description | Input Values Tc (hr) | Input Values * Tt (hr) | Rounded Values Tc (hr) | Rounded Values * Tt (hr) | Ia/p Interpolated (Yes/No) | Ia/p Messages |
|---|---|---|---|---|---|---|
| | 0.28 | 0.00 | 0.30 | 0.00 | Yes | -- |

* Travel time from subarea outfall to composite watershed outfall point.

Return Frequency: 10 years

TR-55 TABULAR HYDROGRAPH METHOD
Type II. Distribution
(24 hr. Duration Storm)

Executed: 01-29-1998 10:30:38
Watershed file: --> C:\96038\BMPS\IVA-2\EXIST .MOP
Hydrograph file: --> C:\96038\BMPS\IVA-2\EX-10.HYD

STONEHOUSE SECTION IVC
STORMWATER MANAGEMENT FACILITY
EXISTING CONDITIONS

>>>> Summary of Subarea Times to Peak <<<<

| Subarea | Peak Discharge at Composite Outfall (cfs) | Time to Peak at Composite Outfall (hrs) |
|---|---|---|
| | 15 | 12.2 |
| Composite Watershed | 15 | 12.2 |

Return Frequency: 10 years

TR-55 TABULAR HYDROGRAPH METHOD
Type II. Distribution
(24 hr. Duration Storm)

Executed: 01-29-1998 10:30:38
Watershed file: --> C:\96038\BMPS\IVA-2\EXIST .MOP
Hydrograph file: --> C:\96038\BMPS\IVA-2\EX-10.HYD

STONEHOUSE SECTION IVC
STORMWATER MANAGEMENT FACILITY
EXISTING CONDITIONS

Composite Hydrograph Summary (cfs)

| Subarea Description | 11.0 hr | 11.3 hr | 11.6 hr | 11.9 hr | 12.0 hr | 12.1 hr | 12.2 hr | 12.3 hr | 12.4 hr |
|---|---|---|---|---|---|---|---|---|---|
| | 0 | 0 | 1 | 2 | 4 | 9 | 15 | 15 | 11 |
| Total (cfs) | 0 | 0 | 1 | 2 | 4 | 9 | 15 | 15 | 11 |

| Subarea Description | 12.5 hr | 12.6 hr | 12.7 hr | 12.8 hr | 13.0 hr | 13.2 hr | 13.4 hr | 13.6 hr | 13.8 hr |
|---|---|---|---|---|---|---|---|---|---|
| | 7 | 5 | 4 | 3 | 2 | 2 | 1 | 1 | 1 |
| Total (cfs) | 7 | 5 | 4 | 3 | 2 | 2 | 1 | 1 | 1 |

| Subarea Description | 14.0 hr | 14.3 hr | 14.6 hr | 15.0 hr | 15.5 hr | 16.0 hr | 16.5 hr | 17.0 hr | 17.5 hr |
|---|---|---|---|---|---|---|---|---|---|
| | 1 | 1 | 1 | 1 | 1 | 1 | 1 | 1 | 0 |
| Total (cfs) | 1 | 1 | 1 | 1 | 1 | 1 | 1 | 1 | 0 |

| Subarea Description | 18.0 hr | 19.0 hr | 20.0 hr | 22.0 hr | 26.0 hr |
|---|---|---|---|---|---|
| | 0 | 0 | 0 | 0 | 0 |
| Total (cfs) | 0 | 0 | 0 | 0 | 0 |

Return Frequency: 100 years

TR-55 TABULAR HYDROGRAPH METHOD
Type II. Distribution
(24 hr. Duration Storm)

Executed: 01-29-1998 10:30:38
Watershed file: --> C:\96038\BMPS\IVA-2\EXIST .MOP
Hydrograph file: --> C:\96038\BMPS\IVA-2\EX-100.HYD

STONEHOUSE SECTION IVC
STORMWATER MANAGEMENT FACILITY
EXISTING CONDITIONS

>>>> Input Parameters Used to Compute Hydrograph <<<<

| Subarea Description | AREA (acres) | CN | Tc (hrs) | * Tt (hrs) | Precip. (in) | Runoff (in) | Ia/p input/used |
|---|---|---|---|---|---|---|---|
| | 6.60 | 72.0 | 0.30 | 0.00 | 7.68 | 4.41 | I.1 .10 |

* Travel time from subarea outfall to composite watershed outfall point.
I -- Subarea where user specified interpolation between Ia/p tables.

Total area = 6.60 acres or 0.01031 sq.mi
Peak discharge = 31 cfs

>>>> Computer Modifications of Input Parameters <<<<<

| Subarea Description | Input Values Tc (hr) | Input Values * Tt (hr) | Rounded Values Tc (hr) | Rounded Values * Tt (hr) | Ia/p Interpolated (Yes/No) | Ia/p Messages |
|---|---|---|---|---|---|---|
| | 0.28 | 0.00 | 0.30 | 0.00 | No | Computed Ia/p < .1 |

* Travel time from subarea outfall to composite watershed outfall point.

Return Frequency: 100 years

TR-55 TABULAR HYDROGRAPH METHOD
Type II. Distribution
(24 hr. Duration Storm)

Executed: 01-29-1998 10:30:38
Watershed file: --> C:\96038\BMPS\IVA-2\EXIST .MOP
Hydrograph file: --> C:\96038\BMPS\IVA-2\EX-100.HYD

STONEHOUSE SECTION IVC
STORMWATER MANAGEMENT FACILITY
EXISTING CONDITIONS

>>>> Summary of Subarea Times to Peak <<<<

| Subarea | Peak Discharge at Composite Outfall (cfs) | Time to Peak at Composite Outfall (hrs) |
|---|---|---|
| | 31 | 12.2 |
| Composite Watershed | 31 | 12.2 |

Return Frequency: 100 years

TR-55 TABULAR HYDROGRAPH METHOD
Type II. Distribution
(24 hr. Duration Storm)

Executed: 01-29-1998 10:30:38
Watershed file: --> C:\96038\BMPS\IVA-2\EXIST .MOP
Hydrograph file: --> C:\96038\BMPS\IVA-2\EX-100.HYD

STONEHOUSE SECTION IVC
STORMWATER MANAGEMENT FACILITY
EXISTING CONDITIONS

Composite Hydrograph Summary (cfs)

| Subarea Description | 11.0 hr | 11.3 hr | 11.6 hr | 11.9 hr | 12.0 hr | 12.1 hr | 12.2 hr | 12.3 hr | 12.4 hr |
|---|---|---|---|---|---|---|---|---|---|
| | 1 | 1 | 2 | 5 | 11 | 20 | 31 | 31 | 21 |
| Total (cfs) | 1 | 1 | 2 | 5 | 11 | 20 | 31 | 31 | 21 |

| Subarea Description | 12.5 hr | 12.6 hr | 12.7 hr | 12.8 hr | 13.0 hr | 13.2 hr | 13.4 hr | 13.6 hr | 13.8 hr |
|---|---|---|---|---|---|---|---|---|---|
| | 13 | 9 | 7 | 5 | 4 | 3 | 3 | 2 | 2 |
| Total (cfs) | 13 | 9 | 7 | 5 | 4 | 3 | 3 | 2 | 2 |

| Subarea Description | 14.0 hr | 14.3 hr | 14.6 hr | 15.0 hr | 15.5 hr | 16.0 hr | 16.5 hr | 17.0 hr | 17.5 hr |
|---|---|---|---|---|---|---|---|---|---|
| | 2 | 2 | 2 | 1 | 1 | 1 | 1 | 1 | 1 |
| Total (cfs) | 2 | 2 | 2 | 1 | 1 | 1 | 1 | 1 | 1 |

| Subarea Description | 18.0 hr | 19.0 hr | 20.0 hr | 22.0 hr | 26.0 hr |
|---|---|---|---|---|---|
| | 1 | 1 | 1 | 1 | 0 |
| Total (cfs) | 1 | 1 | 1 | 1 | 0 |

# FUTURE CONDITION

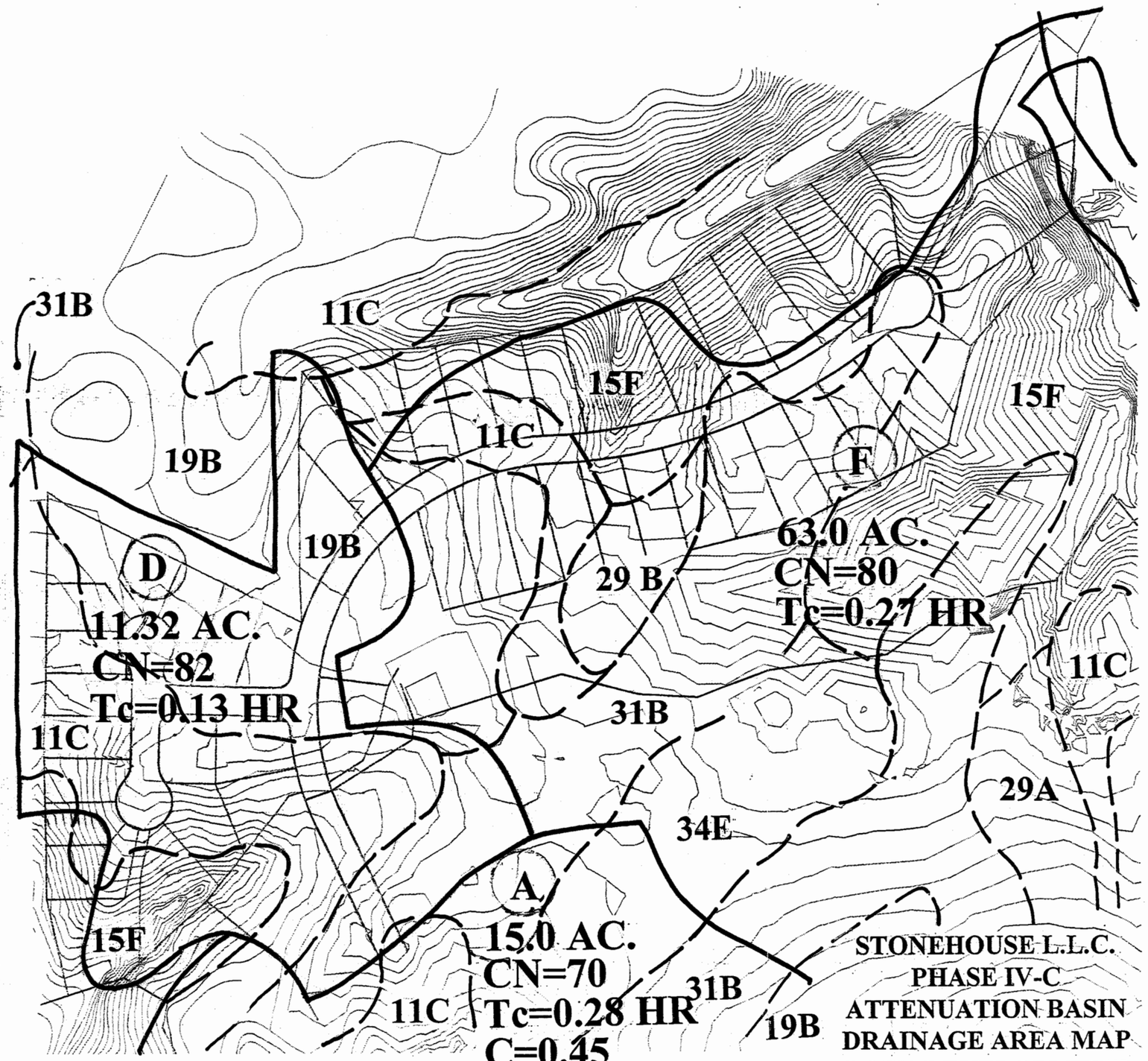


STONEHOUSE L.L.C.
PHASE IV-C
ATTENUATION BASIN
DRAINAGE AREA MAP
POST-DEVELOPMENT

Quick TR-55 Ver.5.46 S/N:
Executed: 10:31:53 01-29-1998

STONEHOUSE
SECTION IVC - ATTENUATION BASIN
SWMF 'D'
FUTURE DEVELOPMENT

RUNOFF CURVE NUMBER SUMMARY

::::::::::::::::::::::::::::::::::::::::::::::::::::::::::::::::::::::::

| Subarea Description | Area (acres) | CN (weighted) |
|---|---|---|
| | 11.32 | 82 |

Quick TR-55 Ver.5.46 S/N:
Executed: 10:31:53 01-29-1998

STONEHOUSE
SECTION IVC - ATTENUATION BASIN
SWMF 'D'
FUTURE DEVELOPMENT

RUNOFF CURVE NUMBER DATA

::::::::::::::::::::::::::::::::::::::::::::::::::::::::::::::::::::::::

Composite Area:

| SURFACE DESCRIPTION | AREA (acres) | CN | |
|---|---|---|---|
| WOODS | 0.50 | 70 | |
| SF RES. 1/4 AC LOTS | 10.82 | 83 | |
| COMPOSITE AREA ---> | 11.32 | 82.4 | ( 82 ) |

::::::::::::::::::::::::::::::::::::::::::::::::::::

Quick TR-55 Ver.5.46 S/N:
Executed: 10:31:21 01-29-1998 C:\96038\BMPS\IVA-2\IVC-FUT.TCT

STONEHOUSE
SECTION IVC ATTENUATION BASIN
FUTURE CONDITIONS

Tc COMPUTATIONS FOR:

```
SHEET FLOW (Applicable to Tc only)
    Segment ID
    Surface description                        5MIN INLET
    Manning's roughness coeff., n                  0.2400
    Flow length, L (total < or = 300)     ft       15.0
    Two-yr 24-hr rainfall, P2             in       3.400
    Land slope, s                       ft/ft      0.0060
                         0.8
         .007 * (n*L)
    T =  --------------                  hrs        0.08                  =   0.08
           0.5    0.4
         P2    *  s

SHALLOW CONCENTRATED FLOW
    Segment ID
    Surface (paved or unpaved)?                              Unpaved
    Flow length, L                        ft        0.0       180.0
    Watercourse slope, s                ft/ft    0.0000      0.0300

                           0.5
    Avg.V =   Csf *   (s)               ft/s     0.0000      2.7946
    where:    Unpaved Csf = 16.1345
              Paved   Csf = 20.3282

    T = L / (3600*V)                     hrs       0.00   +    0.02     =   0.02

CHANNEL FLOW
    Segment ID
    Cross Sectional Flow Area, a       sq.ft       3.14
    Wetted perimeter, Pw                  ft       6.28
    Hydraulic radius, r = a/Pw            ft      0.500
    Channel slope, s                    ft/ft    0.0100
    Manning's roughness coeff., n                0.0130

                     2/3     1/2
          1.49   *  r    *   s
    V =   --------------------          ft/s     7.2203
                    n

    Flow length, L                        ft        750

    T = L / (3600*V)                     hrs       0.03                 =   0.03

    ::::::::::::::::::::::::::::::::::::::::::::::::::::::::::::::::::::::::::::::
                                                TOTAL TIME (hrs)          0.13
```

Quick TR-55 Ver.5.46 S/N:
Executed: 10:31:21 01-29-1998 C:\96038\BMPS\IVA-2\IVC-FUT.TCT

SUMMARY SHEET FOR Tc or Tt COMPUTATIONS
(Solved for Time using TR-55 Methods)

STONEHOUSE
SECTION IVC ATTENUATION BASIN
FUTURE CONDITIONS

| Subarea descr. | Tc or Tt | Time (hrs) |
|---|---|---|
| | Tc | 0.13 |

Return Frequency: 2 years

TR-55 TABULAR HYDROGRAPH METHOD
Type II. Distribution
(24 hr. Duration Storm)

Executed: 01-29-1998 10:30:51
Watershed file: --> C:\96038\BMPS\IVA-2\FUTURE .MOP
Hydrograph file: --> C:\96038\BMPS\IVA-2\FUT-2.HYD

STONEHOUSE SECTION IVC
STORMWATER MANAGEMENT FACILITY
FUTURE CONDITIONS

>>>> Input Parameters Used to Compute Hydrograph <<<<

| Subarea Description | AREA (acres) | CN | Tc (hrs) | * Tt (hrs) | Precip. (in) | Runoff (in) | Ia/p input/used | |
|---|---|---|---|---|---|---|---|---|
| | 11.32 | 82.0 | 0.10 | 0.00 | 3.36 | 1.67 | I.13 | .13 |

* Travel time from subarea outfall to composite watershed outfall point.
I -- Subarea where user specified interpolation between Ia/p tables.

Total area = 11.32 acres or 0.01769 sq.mi
Peak discharge = 30 cfs

>>>> Computer Modifications of Input Parameters <<<<<

| Subarea Description | Input Values Tc (hr) | Input Values * Tt (hr) | Rounded Values Tc (hr) | Rounded Values * Tt (hr) | Ia/p Interpolated (Yes/No) | Ia/p Messages |
|---|---|---|---|---|---|---|
| | 0.13 | 0.00 | 0.10 | 0.00 | Yes | -- |

* Travel time from subarea outfall to composite watershed outfall point.

Return Frequency: 2 years

TR-55 TABULAR HYDROGRAPH METHOD
Type II. Distribution
(24 hr. Duration Storm)

Executed: 01-29-1998 10:30:51
Watershed file: --> C:\96038\BMPS\IVA-2\FUTURE .MOP
Hydrograph file: --> C:\96038\BMPS\IVA-2\FUT-2.HYD

STONEHOUSE SECTION IVC
STORMWATER MANAGEMENT FACILITY
FUTURE CONDITIONS

>>>> Summary of Subarea Times to Peak <<<<

| Subarea | Peak Discharge at Composite Outfall (cfs) | Time to Peak at Composite Outfall (hrs) |
|---|---|---|
| | 30 | 12.1 |
| Composite Watershed | 30 | 12.1 |

Return Frequency: 2 years

TR-55 TABULAR HYDROGRAPH METHOD
Type II. Distribution
(24 hr. Duration Storm)

Executed: 01-29-1998 10:30:51
Watershed file: --> C:\96038\BMPS\IVA-2\FUTURE .MOP
Hydrograph file: --> C:\96038\BMPS\IVA-2\FUT-2.HYD

STONEHOUSE SECTION IVC
STORMWATER MANAGEMENT FACILITY
FUTURE CONDITIONS

Composite Hydrograph Summary (cfs)

| Subarea Description | 11.0 hr | 11.3 hr | 11.6 hr | 11.9 hr | 12.0 hr | 12.1 hr | 12.2 hr | 12.3 hr | 12.4 hr |
|---|---|---|---|---|---|---|---|---|---|
| | 1 | 1 | 1 | 9 | 19 | 30 | 18 | 6 | 4 |
| Total (cfs) | 1 | 1 | 1 | 9 | 19 | 30 | 18 | 6 | 4 |

| Subarea Description | 12.5 hr | 12.6 hr | 12.7 hr | 12.8 hr | 13.0 hr | 13.2 hr | 13.4 hr | 13.6 hr | 13.8 hr |
|---|---|---|---|---|---|---|---|---|---|
| | 4 | 3 | 3 | 2 | 2 | 2 | 2 | 1 | 1 |
| Total (cfs) | 4 | 3 | 3 | 2 | 2 | 2 | 2 | 1 | 1 |

| Subarea Description | 14.0 hr | 14.3 hr | 14.6 hr | 15.0 hr | 15.5 hr | 16.0 hr | 16.5 hr | 17.0 hr | 17.5 hr |
|---|---|---|---|---|---|---|---|---|---|
| | 1 | 1 | 1 | 1 | 1 | 1 | 1 | 1 | 1 |
| Total (cfs) | 1 | 1 | 1 | 1 | 1 | 1 | 1 | 1 | 1 |

| Subarea Description | 18.0 hr | 19.0 hr | 20.0 hr | 22.0 hr | 26.0 hr |
|---|---|---|---|---|---|
| | 1 | 0 | 0 | 0 | 0 |
| Total (cfs) | 1 | 0 | 0 | 0 | 0 |

Return Frequency: 10 years

TR-55 TABULAR HYDROGRAPH METHOD
Type II. Distribution
(24 hr. Duration Storm)

Executed: 01-29-1998 10:30:51
Watershed file: --> C:\96038\BMPS\IVA-2\FUTURE .MOP
Hydrograph file: --> C:\96038\BMPS\IVA-2\FUT-10.HYD

STONEHOUSE SECTION IVC
STORMWATER MANAGEMENT FACILITY
FUTURE CONDITIONS

>>>> Input Parameters Used to Compute Hydrograph <<<<

| Subarea Description | AREA (acres) | CN | Tc (hrs) | * Tt (hrs) | Precip. (in) | Runoff (in) | Ia/p input/used |
|---|---|---|---|---|---|---|---|
| | 11.32 | 82.0 | 0.10 | 0.00 | 5.04 | 3.11 | I.09 .10 |

* Travel time from subarea outfall to composite watershed outfall point.
I -- Subarea where user specified interpolation between Ia/p tables.

Total area = 11.32 acres or 0.01769 sq.mi
Peak discharge = 56 cfs

>>>> Computer Modifications of Input Parameters <<<<<

| Subarea Description | Input Values Tc (hr) | Input Values * Tt (hr) | Rounded Values Tc (hr) | Rounded Values * Tt (hr) | Ia/p Interpolated (Yes/No) | Ia/p Messages |
|---|---|---|---|---|---|---|
| | 0.13 | 0.00 | 0.10 | 0.00 | No | Computed Ia/p < .1 |

* Travel time from subarea outfall to composite watershed outfall point.

Return Frequency: 10 years

TR-55 TABULAR HYDROGRAPH METHOD
Type II. Distribution
(24 hr. Duration Storm)

Executed: 01-29-1998 10:30:51
Watershed file: --> C:\96038\BMPS\IVA-2\FUTURE .MOP
Hydrograph file: --> C:\96038\BMPS\IVA-2\FUT-10.HYD

STONEHOUSE SECTION IVC
STORMWATER MANAGEMENT FACILITY
FUTURE CONDITIONS

>>>> Summary of Subarea Times to Peak <<<<

| Subarea | Peak Discharge at Composite Outfall (cfs) | Time to Peak at Composite Outfall (hrs) |
|---|---|---|
| | 56 | 12.1 |
| Composite Watershed | 56 | 12.1 |

Return Frequency: 10 years

TR-55 TABULAR HYDROGRAPH METHOD
Type II. Distribution
(24 hr. Duration Storm)

Executed: 01-29-1998 10:30:51
Watershed file: --> C:\96038\BMPS\IVA-2\FUTURE .MOP
Hydrograph file: --> C:\96038\BMPS\IVA-2\FUT-10.HYD

STONEHOUSE SECTION IVC
STORMWATER MANAGEMENT FACILITY
FUTURE CONDITIONS

Composite Hydrograph Summary (cfs)

| Subarea Description | 11.0 hr | 11.3 hr | 11.6 hr | 11.9 hr | 12.0 hr | 12.1 hr | 12.2 hr | 12.3 hr | 12.4 hr |
|---|---|---|---|---|---|---|---|---|---|
| | 1 | 2 | 3 | 18 | 36 | 56 | 35 | 12 | 8 |
| Total (cfs) | 1 | 2 | 3 | 18 | 36 | 56 | 35 | 12 | 8 |

| Subarea Description | 12.5 hr | 12.6 hr | 12.7 hr | 12.8 hr | 13.0 hr | 13.2 hr | 13.4 hr | 13.6 hr | 13.8 hr |
|---|---|---|---|---|---|---|---|---|---|
| | 7 | 6 | 5 | 4 | 4 | 3 | 3 | 3 | 2 |
| Total (cfs) | 7 | 6 | 5 | 4 | 4 | 3 | 3 | 3 | 2 |

| Subarea Description | 14.0 hr | 14.3 hr | 14.6 hr | 15.0 hr | 15.5 hr | 16.0 hr | 16.5 hr | 17.0 hr | 17.5 hr |
|---|---|---|---|---|---|---|---|---|---|
| | 2 | 2 | 2 | 2 | 1 | 1 | 1 | 1 | 1 |
| Total (cfs) | 2 | 2 | 2 | 2 | 1 | 1 | 1 | 1 | 1 |

| Subarea Description | 18.0 hr | 19.0 hr | 20.0 hr | 22.0 hr | 26.0 hr |
|---|---|---|---|---|---|
| | 1 | 1 | 1 | 1 | 0 |
| Total (cfs) | 1 | 1 | 1 | 1 | 0 |

Return Frequency: 100 years

TR-55 TABULAR HYDROGRAPH METHOD
Type II. Distribution
(24 hr. Duration Storm)

Executed: 01-29-1998 10:30:51
Watershed file: --> C:\96038\BMPS\IVA-2\FUTURE .MOP
Hydrograph file: --> C:\96038\BMPS\IVA-2\FUT-100.HYD

STONEHOUSE SECTION IVC
STORMWATER MANAGEMENT FACILITY
FUTURE CONDITIONS

>>>> Input Parameters Used to Compute Hydrograph <<<<

| Subarea Description | AREA (acres) | CN | Tc (hrs) | * Tt (hrs) | Precip. (in) | Runoff (in) | Ia/p input/used |
|---|---|---|---|---|---|---|---|
| | 11.32 | 82.0 | 0.10 | 0.00 | 7.68 | 5.56 | I.06 .10 |

* Travel time from subarea outfall to composite watershed outfall point.
I -- Subarea where user specified interpolation between Ia/p tables.

Total area = 11.32 acres or 0.01769 sq.mi
Peak discharge = 99 cfs

>>>> Computer Modifications of Input Parameters <<<<<

| Subarea Description | Input Values Tc (hr) | Input Values * Tt (hr) | Rounded Values Tc (hr) | Rounded Values * Tt (hr) | Ia/p Interpolated (Yes/No) | Ia/p Messages |
|---|---|---|---|---|---|---|
| | 0.13 | 0.00 | 0.10 | 0.00 | No | Computed Ia/p < .1 |

* Travel time from subarea outfall to composite watershed outfall point.

Return Frequency: 100 years

TR-55 TABULAR HYDROGRAPH METHOD
Type II. Distribution
(24 hr. Duration Storm)

Executed: 01-29-1998 10:30:51
Watershed file: --> C:\96038\BMPS\IVA-2\FUTURE .MOP
Hydrograph file: --> C:\96038\BMPS\IVA-2\FUT-100.HYD

STONEHOUSE SECTION IVC
STORMWATER MANAGEMENT FACILITY
FUTURE CONDITIONS

>>>> Summary of Subarea Times to Peak <<<<

| Subarea | Peak Discharge at Composite Outfall (cfs) | Time to Peak at Composite Outfall (hrs) |
|---|---|---|
| | 99 | 12.1 |
| Composite Watershed | 99 | 12.1 |

Return Frequency: 100 years

TR-55 TABULAR HYDROGRAPH METHOD
Type II. Distribution
(24 hr. Duration Storm)

Executed: 01-29-1998 10:30:51
Watershed file: --> C:\96038\BMPS\IVA-2\FUTURE .MOP
Hydrograph file: --> C:\96038\BMPS\IVA-2\FUT-100.HYD

STONEHOUSE SECTION IVC
STORMWATER MANAGEMENT FACILITY
FUTURE CONDITIONS

Composite Hydrograph Summary (cfs)

| Subarea Description | 11.0 hr | 11.3 hr | 11.6 hr | 11.9 hr | 12.0 hr | 12.1 hr | 12.2 hr | 12.3 hr | 12.4 hr |
|---|---|---|---|---|---|---|---|---|---|
| | 2 | 3 | 5 | 33 | 64 | 99 | 62 | 21 | 14 |
| Total (cfs) | 2 | 3 | 5 | 33 | 64 | 99 | 62 | 21 | 14 |

| Subarea Description | 12.5 hr | 12.6 hr | 12.7 hr | 12.8 hr | 13.0 hr | 13.2 hr | 13.4 hr | 13.6 hr | 13.8 hr |
|---|---|---|---|---|---|---|---|---|---|
| | 12 | 10 | 8 | 7 | 6 | 6 | 5 | 5 | 4 |
| Total (cfs) | 12 | 10 | 8 | 7 | 6 | 6 | 5 | 5 | 4 |

| Subarea Description | 14.0 hr | 14.3 hr | 14.6 hr | 15.0 hr | 15.5 hr | 16.0 hr | 16.5 hr | 17.0 hr | 17.5 hr |
|---|---|---|---|---|---|---|---|---|---|
| | 4 | 3 | 3 | 3 | 3 | 2 | 2 | 2 | 2 |
| Total (cfs) | 4 | 3 | 3 | 3 | 3 | 2 | 2 | 2 | 2 |

| Subarea Description | 18.0 hr | 19.0 hr | 20.0 hr | 22.0 hr | 26.0 hr |
|---|---|---|---|---|---|
| | 2 | 1 | 1 | 1 | 0 |
| Total (cfs) | 2 | 1 | 1 | 1 | 0 |

POND-2 Version: 5.20
S/N:

STONEHOUSE
SECTION IVC ATTENUATION BASIN
SWMF 'D'
EXISTING CONTOURS FROM SURVEY

CALCULATED 01-29-1998 10:29:34
DISK FILE: C:\96038\BMPS\IVA-2\IVC-SURV.VOL

Planimeter scale: 1 inch = 208.71 ft.

| Elevation (ft) | Planimeter (sq.in.) | Area (acres) | A1+A2+sqr(A1*A2) (acres) | * Volume (acre-ft) | Volume Sum (acre-ft) |
|---|---|---|---|---|---|
| 64.00 | 0.00 | 0.00 | 0.00 | 0.00 | 0.00 |
| 66.00 | 0.04 | 0.04 | 0.04 | 0.03 | 0.03 |
| 68.00 | 0.08 | 0.08 | 0.18 | 0.12 | 0.14 |
| 69.60 | *I* | 0.11 | 0.29 | 0.15 | 0.30 |
| 70.00 | 0.12 | 0.12 | 0.30 | 0.20 | 0.34 |
| 72.00 | 0.17 | 0.17 | 0.43 | 0.29 | 0.63 |
| 74.00 | 0.23 | 0.23 | 0.60 | 0.40 | 1.03 |
| 76.00 | 0.33 | 0.33 | 0.84 | 0.56 | 1.59 |
| 78.00 | 0.43 | 0.43 | 1.14 | 0.76 | 2.34 |
| 80.00 | 0.56 | 0.56 | 1.48 | 0.99 | 3.33 |

*I* ---> Interpolated area from closest two planimeter readings.

$$IA = (sq.rt(Area1) + ((Ei-E1)/(E2-E1))*(sq.rt(Area2)-sq.rt(Area1)))^2$$

where: E1, E2 = Closest two elevations with planimeter data
Ei = Elevation at which to interpolate area
Area1,Area2 = Areas computed for E1, E2, respectively
IA = Interpolated area for Ei

* Incremental volume computed by the Conic Method for Reservoir Volumes.

Volume = (1/3) * (EL2-EL1) * (Area1 + Area2 + sq.rt.(Area1*Area2))

where: EL1, EL2 = Lower and upper elevations of the increment
Area1,Area2 = Areas computed for EL1, EL2, respectively
Volume = Incremental volume between EL1 and EL2

Outlet Structure File: IVC .STR

POND-2 Version: 5.20 S/N:
Date Executed: Time Executed:

**********
STONEHOUSE SECTION IVC
ATTENUATION BASIN

**********

Outlet Structure File: C:\96038\BMPS\IVA-2\IVC .STR
Planimeter Input File: C:\96038\BMPS\IVA-2\IVC-SURV.VOL
Rating Table Output File: C:\96038\BMPS\IVA-2\IVC .PND

Min. Elev.(ft) = 64 Max. Elev.(ft) = 80 Incr.(ft) = .5

Additional elevations (ft) to be included in table:
* * * * * * * * * * * * * * * * * * * * * * * * * *
64.16 64.175 70.44

**********
SYSTEM CONNECTIVITY
**********

| Structure | No. | Q Table | | Q Table |
|---|---|---|---|---|
| TABLE | 7 | | -> | 7 |
| ORIFICE-VC | 4 | | -> | 4 |
| TABLE | 8 | | -> | 8 |
| ORIFICE-VC | 6 | | -> | 6 |
| NULL STRUC | 4 | + 6 | -> | 13 |
| STAND PIPE | 1 | + 13 | -> | 5 |
| CULVERT-CR | 2 | ? 5 | -> | 3 |

Outflow rating table summary was stored in file:
C:\96038\BMPS\IVA-2\IVC .PND

Outlet Structure File: IVC .STR

POND-2 Version: 5.20 S/N:
Date Executed: Time Executed:

**********
STONEHOUSE SECTION IVC
ATTENUATION BASIN

**********

***** COMPOSITE OUTFLOW SUMMARY ****

| Elevation (ft) | Q (cfs) | Contributing Structures |
|---|---|---|
| 64.00 | 0.0 | 7 |
| 64.16 | 0.0 | |
| 64.18 | 0.0 | 4 |
| 64.50 | 0.1 | 4 |
| 65.00 | 0.1 | 4 |
| 65.50 | 0.1 | 4 |
| 66.00 | 0.2 | 4 |
| 66.50 | 0.2 | 4 |
| 67.00 | 0.2 | 4 |
| 67.50 | 0.2 | 4 |
| 68.00 | 0.2 | 4 |
| 68.50 | 0.2 | 4 |
| 69.00 | 0.2 | 4 |
| 69.50 | 0.3 | 4 |
| 70.00 | 1.1 | 8 +4 |
| 70.44 | 2.0 | 6 +4 |
| 70.50 | 2.1 | 6 +4 |
| 71.00 | 2.9 | 6 +4 |
| 71.50 | 3.5 | 6 +4 |
| 72.00 | 4.0 | 6 +4 |
| 72.50 | 4.4 | 6 +4 |
| 73.00 | 4.9 | 6 +4 |
| 73.50 | 5.2 | 6 +4 |
| 74.00 | 5.6 | 6 +4 |
| 74.50 | 5.9 | 6 +4 |
| 75.00 | 6.2 | 6 +4 +1 |
| 75.50 | 21.2 | 6 +4 +1 |
| 76.00 | 48.3 | 6 +4 +1 |
| 76.50 | 52.6 | 2 |
| 77.00 | 53.8 | 2 |
| 77.50 | 54.9 | 2 |
| 78.00 | 56.1 | 2 |
| 78.50 | 57.1 | 2 |
| 79.00 | 58.2 | 2 |
| 79.50 | 59.3 | 2 |
| 80.00 | 60.3 | 2 |

Outlet Structure File: IVC .STR

POND-2 Version: 5.20 S/N:
Date Executed: Time Executed:

**********
STONEHOUSE SECTION IVC
ATTENUATION BASIN

**********

>>>>>> Structure No. 7 <<<<<<
(Input Data)

TABLE
Input your own rating table.
E1 (ft) =64.0 E2 (ft) =64.16

Constant (ft) added to each elevation was:

| Elev. (ft) | Q (cfs) |
|---|---|
| 64 | 0 |
| 64.16 | .02 |

Outlet Structure File: IVC .STR

POND-2 Version: 5.20 S/N:
Date Executed: Time Executed:

**********
STONEHOUSE SECTION IVC
ATTENUATION BASIN

**********

>>>>>> Structure No. 4 <<<<<<
(Input Data)

ORIFICE-VC
Orifice - Vertical Circular

| | |
|---|---|
| E1 elev.(ft)? | 64.17 |
| E2 elev.(ft)? | 80.001 |
| Orifice coeff.? | .6 |
| Invert elev.(ft)? | 64.0 |
| Datum elev.(ft)? | 64.085 |
| Diameter (ft)? | 0.17 |

Outlet Structure File: IVC .STR

POND-2 Version: 5.20 S/N:
Date Executed: Time Executed:

**********
STONEHOUSE SECTION IVC
ATTENUATION BASIN

**********

>>>>>> Structure No. 8 <<<<<<
(Input Data)

TABLE
Input your own rating table.
E1 (ft) =69.6 E2 (ft) =70.42

Constant (ft) added to each elevation was:

| Elev. (ft) | Q (cfs) |
|---|---|
| 69.59999999999999 | 0 |
| 70.42 | 1.7 |

Outlet Structure File: IVC .STR

POND-2 Version: 5.20 S/N:
Date Executed: Time Executed:

**********
STONEHOUSE SECTION IVC
ATTENUATION BASIN

**********

>>>>>> Structure No. 6 <<<<<<
(Input Data)

ORIFICE-VC
Orifice - Vertical Circular

| | |
|---|---|
| E1 elev.(ft)? | 70.43 |
| E2 elev.(ft)? | 80.001 |
| Orifice coeff.? | 0.6 |
| Invert elev.(ft)? | 69.6 |
| Datum elev.(ft)? | 70.02 |
| Diameter (ft)? | 0.833 ~10" |

Outlet Structure File: IVC .STR

POND-2 Version: 5.20 S/N:
Date Executed: Time Executed:

**********
STONEHOUSE SECTION IVC
ATTENUATION BASIN

**********

>>>>>> NULL Structure <<<<<<
(Input Data)

NULL STRUC
Null Structure -- Add/check between tables

4 + 6 -> 13

Outlet Structure File: IVC .STR

POND-2 Version: 5.20 S/N:
Date Executed: Time Executed:

**********
STONEHOUSE SECTION IVC
ATTENUATION BASIN

**********

>>>>>> Structure No. 1 <<<<<<
(Input Data)

STAND PIPE
Stand Pipe with weir or orifice flow

| | |
|---|---|
| E1 elev.(ft)? | 75.0 |
| E2 elev.(ft)? | 80.001 |
| Crest elev.(ft)? | 75.0 |
| Diameter (ft)? | 4.0 |
| Weir coefficient? | 3.3 |
| Orifice coefficient? | .6 |
| Start transition elev.(ft) @ ? | |
| Transition height (ft)? | |

Outlet Structure File: IVC .STR

POND-2 Version: 5.20 S/N:
Date Executed: Time Executed:

**********
STONEHOUSE SECTION IVC
ATTENUATION BASIN

**********

>>>>>> Structure No. 2 <<<<<<
(Input Data)

CULVERT-CR
Circular Culvert (With Inlet Control)

| | |
|---|---|
| E1 elev.(ft)? | 75.0 |
| E2 elev.(ft)? | 80.001 |
| Diam. (ft)? | 2.0 |
| Inv. el.(ft)? | 64.0 |
| Slope (ft/ft)? | .01 |
| T1 ratio? | |
| T2 ratio? | |
| K Coeff.? | .0098 |
| M Coeff.? | 2.0 |
| c Coeff.? | .0398 |
| Y Coeff.? | 0.67 |
| Form 1 or 2? | 1 |
| Slope factor? | -0.5 |

Outlet Structure File: IVC .STR

POND-2 Version: 5.20 S/N:
Date Executed: Time Executed:

**********
STONEHOUSE SECTION IVC
ATTENUATION BASIN

**********

Outflow Rating Table for Structure #7
TABLE Input your own rating table.

| Elevation (ft) | Q (cfs) | Computation Messages |
|---|---|---|
| 64.00 | 0.0 | |
| 64.16 | 0.0 | E = or > E2=64.16 |
| 64.18 | 0.0 | E = or > E2=64.16 |
| 64.50 | 0.0 | E = or > E2=64.16 |
| 65.00 | 0.0 | E = or > E2=64.16 |
| 65.50 | 0.0 | E = or > E2=64.16 |
| 66.00 | 0.0 | E = or > E2=64.16 |
| 66.50 | 0.0 | E = or > E2=64.16 |
| 67.00 | 0.0 | E = or > E2=64.16 |
| 67.50 | 0.0 | E = or > E2=64.16 |
| 68.00 | 0.0 | E = or > E2=64.16 |
| 68.50 | 0.0 | E = or > E2=64.16 |
| 69.00 | 0.0 | E = or > E2=64.16 |
| 69.50 | 0.0 | E = or > E2=64.16 |
| 70.00 | 0.0 | E = or > E2=64.16 |
| 70.44 | 0.0 | E = or > E2=64.16 |
| 70.50 | 0.0 | E = or > E2=64.16 |
| 71.00 | 0.0 | E = or > E2=64.16 |
| 71.50 | 0.0 | E = or > E2=64.16 |
| 72.00 | 0.0 | E = or > E2=64.16 |
| 72.50 | 0.0 | E = or > E2=64.16 |
| 73.00 | 0.0 | E = or > E2=64.16 |
| 73.50 | 0.0 | E = or > E2=64.16 |
| 74.00 | 0.0 | E = or > E2=64.16 |
| 74.50 | 0.0 | E = or > E2=64.16 |
| 75.00 | 0.0 | E = or > E2=64.16 |
| 75.50 | 0.0 | E = or > E2=64.16 |
| 76.00 | 0.0 | E = or > E2=64.16 |
| 76.50 | 0.0 | E = or > E2=64.16 |
| 77.00 | 0.0 | E = or > E2=64.16 |
| 77.50 | 0.0 | E = or > E2=64.16 |
| 78.00 | 0.0 | E = or > E2=64.16 |
| 78.50 | 0.0 | E = or > E2=64.16 |
| 79.00 | 0.0 | E = or > E2=64.16 |
| 79.50 | 0.0 | E = or > E2=64.16 |
| 80.00 | 0.0 | E = or > E2=64.16 |

Outlet Structure File: IVC .STR

POND-2 Version: 5.20 S/N:
Date Executed: Time Executed:

**********
STONEHOUSE SECTION IVC
ATTENUATION BASIN

**********

Outflow Rating Table for Structure #4
ORIFICE-VC Orifice - Vertical Circular

| Elevation (ft) | Q (cfs) | Computation Messages |
|---|---|---|
| 64.00 | 0.0 | E < E1=64.17 |
| 64.16 | 0.0 | E < E1=64.17 |
| 64.18 | 0.0 | H =.09 |
| 64.50 | 0.1 | H =.415 |
| 65.00 | 0.1 | H =.915 |
| 65.50 | 0.1 | H =1.415 |
| 66.00 | 0.2 | H =1.915 |
| 66.50 | 0.2 | H =2.415 |
| 67.00 | 0.2 | H =2.915 |
| 67.50 | 0.2 | H =3.415 |
| 68.00 | 0.2 | H =3.915 |
| 68.50 | 0.2 | H =4.415 |
| 69.00 | 0.2 | H =4.915 |
| 69.50 | 0.3 | H =5.415 |
| 70.00 | 0.3 | H =5.915 |
| 70.44 | 0.3 | H =6.355 |
| 70.50 | 0.3 | H =6.415 |
| 71.00 | 0.3 | H =6.915 |
| 71.50 | 0.3 | H =7.415 |
| 72.00 | 0.3 | H =7.915 |
| 72.50 | 0.3 | H =8.415 |
| 73.00 | 0.3 | H =8.915 |
| 73.50 | 0.3 | H =9.415 |
| 74.00 | 0.3 | H =9.915 |
| 74.50 | 0.4 | H =10.415 |
| 75.00 | 0.4 | H =10.915 |
| 75.50 | 0.4 | H =11.415 |
| 76.00 | 0.4 | H =11.915 |
| 76.50 | 0.4 | H =12.415 |
| 77.00 | 0.4 | H =12.915 |
| 77.50 | 0.4 | H =13.415 |
| 78.00 | 0.4 | H =13.915 |
| 78.50 | 0.4 | H =14.415 |
| 79.00 | 0.4 | H =14.915 |

Outlet Structure File: IVC .STR

POND-2 Version: 5.20 S/N:
Date Executed: Time Executed:

>>>>> CONTINUED from previous page <<<<<

Outflow Rating Table for Structure #4
ORIFICE-VC Orifice - Vertical Circular

| Elevation (ft) | Q (cfs) | Computation Messages |
|---|---|---|
| 79.50 | 0.4 | H =15.415 |
| 80.00 | 0.4 | H =15.915 |

C = .6 A = 2.269801E-02 sq.ft.
H (ft) = Table elev. - Datum elev. ( 64.085 ft )
Q (cfs) = C * A * sqr(2g * H)

Outlet Structure File: IVC .STR

POND-2 Version: 5.20 S/N:
Date Executed: Time Executed:

**********
STONEHOUSE SECTION IVC
ATTENUATION BASIN

**********

Outflow Rating Table for Structure #8
TABLE Input your own rating table.

| Elevation (ft) | Q (cfs) | Computation Messages |
|---|---|---|
| 64.00 | 0.0 | E < E1=69.6 |
| 64.16 | 0.0 | E < E1=69.6 |
| 64.18 | 0.0 | E < E1=69.6 |
| 64.50 | 0.0 | E < E1=69.6 |
| 65.00 | 0.0 | E < E1=69.6 |
| 65.50 | 0.0 | E < E1=69.6 |
| 66.00 | 0.0 | E < E1=69.6 |
| 66.50 | 0.0 | E < E1=69.6 |
| 67.00 | 0.0 | E < E1=69.6 |
| 67.50 | 0.0 | E < E1=69.6 |
| 68.00 | 0.0 | E < E1=69.6 |
| 68.50 | 0.0 | E < E1=69.6 |
| 69.00 | 0.0 | E < E1=69.6 |
| 69.50 | 0.0 | E < E1=69.6 |
| 70.00 | 0.8 | Interpolated from input table |
| 70.44 | 0.0 | E = or > E2=70.42 |
| 70.50 | 0.0 | E = or > E2=70.42 |
| 71.00 | 0.0 | E = or > E2=70.42 |
| 71.50 | 0.0 | E = or > E2=70.42 |
| 72.00 | 0.0 | E = or > E2=70.42 |
| 72.50 | 0.0 | E = or > E2=70.42 |
| 73.00 | 0.0 | E = or > E2=70.42 |
| 73.50 | 0.0 | E = or > E2=70.42 |
| 74.00 | 0.0 | E = or > E2=70.42 |
| 74.50 | 0.0 | E = or > E2=70.42 |
| 75.00 | 0.0 | E = or > E2=70.42 |
| 75.50 | 0.0 | E = or > E2=70.42 |
| 76.00 | 0.0 | E = or > E2=70.42 |
| 76.50 | 0.0 | E = or > E2=70.42 |
| 77.00 | 0.0 | E = or > E2=70.42 |
| 77.50 | 0.0 | E = or > E2=70.42 |
| 78.00 | 0.0 | E = or > E2=70.42 |
| 78.50 | 0.0 | E = or > E2=70.42 |
| 79.00 | 0.0 | E = or > E2=70.42 |
| 79.50 | 0.0 | E = or > E2=70.42 |
| 80.00 | 0.0 | E = or > E2=70.42 |

Outlet Structure File: IVC .STR

POND-2 Version: 5.20 S/N:
Date Executed: Time Executed:

**********
STONEHOUSE SECTION IVC
ATTENUATION BASIN

**********

Outflow Rating Table for Structure #6
ORIFICE-VC Orifice - Vertical Circular

| Elevation (ft) | Q (cfs) | Computation Messages |
|---|---|---|
| 64.00 | 0.0 | E < E1=70.43 |
| 64.16 | 0.0 | E < E1=70.43 |
| 64.18 | 0.0 | E < E1=70.43 |
| 64.50 | 0.0 | E < E1=70.43 |
| 65.00 | 0.0 | E < E1=70.43 |
| 65.50 | 0.0 | E < E1=70.43 |
| 66.00 | 0.0 | E < E1=70.43 |
| 66.50 | 0.0 | E < E1=70.43 |
| 67.00 | 0.0 | E < E1=70.43 |
| 67.50 | 0.0 | E < E1=70.43 |
| 68.00 | 0.0 | E < E1=70.43 |
| 68.50 | 0.0 | E < E1=70.43 |
| 69.00 | 0.0 | E < E1=70.43 |
| 69.50 | 0.0 | E < E1=70.43 |
| 70.00 | 0.0 | E < E1=70.43 |
| 70.44 | 1.7 | H =.42 |
| 70.50 | 1.8 | H =.48 |
| 71.00 | 2.6 | H =.98 |
| 71.50 | 3.2 | H =1.48 |
| 72.00 | 3.7 | H =1.98 |
| 72.50 | 4.1 | H =2.48 |
| 73.00 | 4.5 | H =2.98 |
| 73.50 | 4.9 | H =3.48 |
| 74.00 | 5.2 | H =3.98 |
| 74.50 | 5.6 | H =4.48 |
| 75.00 | 5.9 | H =4.98 |
| 75.50 | 6.1 | H =5.48 |
| 76.00 | 6.4 | H =5.98 |
| 76.50 | 6.7 | H =6.48 |
| 77.00 | 6.9 | H =6.98 |
| 77.50 | 7.2 | H =7.48 |
| 78.00 | 7.4 | H =7.98 |
| 78.50 | 7.6 | H =8.48 |
| 79.00 | 7.9 | H =8.98 |

Outlet Structure File: IVC .STR

POND-2 Version: 5.20 S/N:
Date Executed: Time Executed:

>>>>> CONTINUED from previous page <<<<<

Outflow Rating Table for Structure #6
ORIFICE-VC Orifice - Vertical Circular

| Elevation (ft) | Q (cfs) | Computation Messages |
|---|---|---|
| 79.50 | 8.1 | H =9.48 |
| 80.00 | 8.3 | H =9.98 |

C = .6 A = .5449792 sq.ft.
H (ft) = Table elev. - Datum elev. ( 70.02 ft )
Q (cfs) = C * A * sqr(2g * H)

Outlet Structure File: IVC .STR

POND-2 Version: 5.20 S/N:
Date Executed: Time Executed:

**********
STONEHOUSE SECTION IVC
ATTENUATION BASIN

**********

Outflow Rating Table for Structure #1
STAND PIPE Stand Pipe with weir or orifice flow

***** INLET CONTROL ASSUMED *****

| Elevation (ft) | Q (cfs) | Computation Messages |
|---|---|---|
| 64.00 | 0.0 | E < Inv.El.= 75 |
| 64.16 | 0.0 | E < El=75.0 |
| 64.18 | 0.0 | E < El=75.0 |
| 64.50 | 0.0 | E < El=75.0 |
| 65.00 | 0.0 | E < El=75.0 |
| 65.50 | 0.0 | E < El=75.0 |
| 66.00 | 0.0 | E < El=75.0 |
| 66.50 | 0.0 | E < El=75.0 |
| 67.00 | 0.0 | E < El=75.0 |
| 67.50 | 0.0 | E < El=75.0 |
| 68.00 | 0.0 | E < El=75.0 |
| 68.50 | 0.0 | E < El=75.0 |
| 69.00 | 0.0 | E < El=75.0 |
| 69.50 | 0.0 | E < El=75.0 |
| 70.00 | 0.0 | E < El=75.0 |
| 70.44 | 0.0 | E < El=75.0 |
| 70.50 | 0.0 | E < El=75.0 |
| 71.00 | 0.0 | E < El=75.0 |
| 71.50 | 0.0 | E < El=75.0 |
| 72.00 | 0.0 | E < El=75.0 |
| 72.50 | 0.0 | E < El=75.0 |
| 73.00 | 0.0 | E < El=75.0 |
| 73.50 | 0.0 | E < El=75.0 |
| 74.00 | 0.0 | E < El=75.0 |
| 74.50 | 0.0 | E < El=75.0 |
| 75.00 | 0.0 | Weir: H =0.0 |
| 75.50 | 14.7 | Weir: H =.5 |
| 76.00 | 41.5 | Weir: H =1.0 |
| 76.50 | 74.1 | Orifice: H =1.5 |
| 77.00 | 85.6 | Orifice: H =2.0 |
| 77.50 | 95.7 | Orifice: H =2.5 |
| 78.00 | 104.8 | Orifice: H =3.0 |

Outlet Structure File: IVC .STR

POND-2 Version: 5.20 S/N:
Date Executed: Time Executed:

>>>>> CONTINUED from previous page <<<<<

Outflow Rating Table for Structure #1
STAND PIPE Stand Pipe with weir or orifice flow

***** INLET CONTROL ASSUMED *****

| Elevation (ft) | Q (cfs) | Computation | Messages |
|---|---|---|---|
| 78.50 | 113.2 | Orifice: | H =3.5 |
| 79.00 | 121.0 | Orifice: | H =4.0 |
| 79.50 | 128.4 | Orifice: | H =4.5 |
| 80.00 | 135.3 | Orifice: | H =5.0 |

Weir Cw = 3.3 Weir length = 12.56637 ft
Orifice Co = .6 Orifice area = 12.56637 sq.ft.
Q (cfs) = (Cw * L * H**1.5) or (Co * A * sqr(2*g*H))
No transition used, transition height = 0.0
Weir equation = Orifice equation @ elev.= 76.45908 ft

Outlet Structure File: IVC .STR

POND-2 Version: 5.20 S/N:
Date Executed: Time Executed:

**********
STONEHOUSE SECTION IVC
ATTENUATION BASIN

**********

Outflow Rating Table for Structure #2
CULVERT-CR Circular Culvert (With Inlet Control)

***** INLET CONTROL ASSUMED *****

| Elevation (ft) | Q (cfs) | Computation Messages |
|---|---|---|
| 64.00 | 0.0 | E < E1=75.0 |
| 64.16 | 0.0 | E < E1=75.0 |
| 64.18 | 0.0 | E < E1=75.0 |
| 64.50 | 0.0 | E < E1=75.0 |
| 65.00 | 0.0 | E < E1=75.0 |
| 65.50 | 0.0 | E < E1=75.0 |
| 66.00 | 0.0 | E < E1=75.0 |
| 66.50 | 0.0 | E < E1=75.0 |
| 67.00 | 0.0 | E < E1=75.0 |
| 67.50 | 0.0 | E < E1=75.0 |
| 68.00 | 0.0 | E < E1=75.0 |
| 68.50 | 0.0 | E < E1=75.0 |
| 69.00 | 0.0 | E < E1=75.0 |
| 69.50 | 0.0 | E < E1=75.0 |
| 70.00 | 0.0 | E < E1=75.0 |
| 70.44 | 0.0 | E < E1=75.0 |
| 70.50 | 0.0 | E < E1=75.0 |
| 71.00 | 0.0 | E < E1=75.0 |
| 71.50 | 0.0 | E < E1=75.0 |
| 72.00 | 0.0 | E < E1=75.0 |
| 72.50 | 0.0 | E < E1=75.0 |
| 73.00 | 0.0 | E < E1=75.0 |
| 73.50 | 0.0 | E < E1=75.0 |
| 74.00 | 0.0 | E < E1=75.0 |
| 74.50 | 0.0 | E < E1=75.0 |
| 75.00 | 49.0 | Submerged: HW =11.0 |
| 75.50 | 50.2 | Submerged: HW =11.5 |
| 76.00 | 51.5 | Submerged: HW =12.0 |
| 76.50 | 52.6 | Submerged: HW =12.5 |
| 77.00 | 53.8 | Submerged: HW =13.0 |
| 77.50 | 54.9 | Submerged: HW =13.5 |

Outlet Structure File: IVC .STR

POND-2 Version: 5.20 S/N:
Date Executed: Time Executed:

>>>>> CONTINUED from previous page <<<<<

Outflow Rating Table for Structure #2
CULVERT-CR Circular Culvert (With Inlet Control)

***** INLET CONTROL ASSUMED *****

| Elevation (ft) | Q (cfs) | Computation Messages |
|---|---|---|
| 78.00 | 56.1 | Submerged: HW =14.0 |
| 78.50 | 57.1 | Submerged: HW =14.5 |
| 79.00 | 58.2 | Submerged: HW =15.0 |
| 79.50 | 59.3 | Submerged: HW =15.5 |
| 80.00 | 60.3 | Submerged: HW =16.0 |

Used Unsubmerged Equ. Form (1) for elev. less than 66.31 ft
Used Submerged Equation for elevations greater than 66.6 ft
HW=Headwater (ft) dc=Critical depth (ft) Ac=Area (sq.ft) at dc

Transition flows interpolated from the following values:
E1=66.31 ft; Q1=15.55 cfs; Dc=1.42 ft; E2=66.6 ft; Q2=17.77 cfs

Outlet Structure File: IVC .STR

POND-2 Version: 5.20 S/N:
Date Executed: Time Executed:

**********
STONEHOUSE SECTION IVC
ATTENUATION BASIN

**********

Outflow Rating Table 13
Table 13 = 6 + 4

| Elevation (ft) | Q (cfs) | Contributing Structures |
|---|---|---|
| 64.00 | 0.0 | - |
| 64.16 | 0.0 | - |
| 64.18 | 0.0 | 4 |
| 64.50 | 0.1 | 4 |
| 65.00 | 0.1 | 4 |
| 65.50 | 0.1 | 4 |
| 66.00 | 0.2 | 4 |
| 66.50 | 0.2 | 4 |
| 67.00 | 0.2 | 4 |
| 67.50 | 0.2 | 4 |
| 68.00 | 0.2 | 4 |
| 68.50 | 0.2 | 4 |
| 69.00 | 0.2 | 4 |
| 69.50 | 0.3 | 4 |
| 70.00 | 0.3 | 4 |
| 70.44 | 2.0 | 6 +4 |
| 70.50 | 2.1 | 6 +4 |
| 71.00 | 2.9 | 6 +4 |
| 71.50 | 3.5 | 6 +4 |
| 72.00 | 4.0 | 6 +4 |
| 72.50 | 4.4 | 6 +4 |
| 73.00 | 4.9 | 6 +4 |
| 73.50 | 5.2 | 6 +4 |
| 74.00 | 5.6 | 6 +4 |
| 74.50 | 5.9 | 6 +4 |
| 75.00 | 6.2 | 6 +4 |
| 75.50 | 6.5 | 6 +4 |
| 76.00 | 6.8 | 6 +4 |
| 76.50 | 7.1 | 6 +4 |
| 77.00 | 7.3 | 6 +4 |
| 77.50 | 7.6 | 6 +4 |
| 78.00 | 7.8 | 6 +4 |
| 78.50 | 8.1 | 6 +4 |
| 79.00 | 8.3 | 6 +4 |
| 79.50 | 8.5 | 6 +4 |
| 80.00 | 8.7 | 6 +4 |

Outlet Structure File: IVC .STR

POND-2 Version: 5.20 S/N:
Date Executed: Time Executed:

**********
STONEHOUSE SECTION IVC
ATTENUATION BASIN

**********

Outflow Rating Table 5
Table 5 = 13 + 1

| Elevation (ft) | Q (cfs) | Contributing Structures |
|---|---|---|
| 64.00 | 0.0 | - |
| 64.16 | 0.0 | - |
| 64.18 | 0.0 | 4 |
| 64.50 | 0.1 | 4 |
| 65.00 | 0.1 | 4 |
| 65.50 | 0.1 | 4 |
| 66.00 | 0.2 | 4 |
| 66.50 | 0.2 | 4 |
| 67.00 | 0.2 | 4 |
| 67.50 | 0.2 | 4 |
| 68.00 | 0.2 | 4 |
| 68.50 | 0.2 | 4 |
| 69.00 | 0.2 | 4 |
| 69.50 | 0.3 | 4 |
| 70.00 | 0.3 | 4 |
| 70.44 | 2.0 | 6 +4 |
| 70.50 | 2.1 | 6 +4 |
| 71.00 | 2.9 | 6 +4 |
| 71.50 | 3.5 | 6 +4 |
| 72.00 | 4.0 | 6 +4 |
| 72.50 | 4.4 | 6 +4 |
| 73.00 | 4.9 | 6 +4 |
| 73.50 | 5.2 | 6 +4 |
| 74.00 | 5.6 | 6 +4 |
| 74.50 | 5.9 | 6 +4 |
| 75.00 | 6.2 | 6 +4 +1 |
| 75.50 | 21.2 | 6 +4 +1 |
| 76.00 | 48.3 | 6 +4 +1 |
| 76.50 | 81.2 | 6 +4 +1 |
| 77.00 | 92.9 | 6 +4 +1 |
| 77.50 | 103.2 | 6 +4 +1 |
| 78.00 | 112.6 | 6 +4 +1 |
| 78.50 | 121.3 | 6 +4 +1 |
| 79.00 | 129.3 | 6 +4 +1 |
| 79.50 | 136.9 | 6 +4 +1 |
| 80.00 | 144.0 | 6 +4 +1 |

Outlet Structure File: IVC .STR

POND-2 Version: 5.20 S/N:
Date Executed: Time Executed:

**********
STONEHOUSE SECTION IVC
ATTENUATION BASIN

**********

Outflow Rating Table 3
Table 3 = 5 ? 2

| Elevation (ft) | Q (cfs) | Contributing Structures |
|---|---|---|
| 64.00 | 0.0 | - |
| 64.16 | 0.0 | - |
| 64.18 | 0.0 | 4 |
| 64.50 | 0.1 | 4 |
| 65.00 | 0.1 | 4 |
| 65.50 | 0.1 | 4 |
| 66.00 | 0.2 | 4 |
| 66.50 | 0.2 | 4 |
| 67.00 | 0.2 | 4 |
| 67.50 | 0.2 | 4 |
| 68.00 | 0.2 | 4 |
| 68.50 | 0.2 | 4 |
| 69.00 | 0.2 | 4 |
| 69.50 | 0.3 | 4 |
| 70.00 | 0.3 | 4 |
| 70.44 | 2.0 | 6 +4 |
| 70.50 | 2.1 | 6 +4 |
| 71.00 | 2.9 | 6 +4 |
| 71.50 | 3.5 | 6 +4 |
| 72.00 | 4.0 | 6 +4 |
| 72.50 | 4.4 | 6 +4 |
| 73.00 | 4.9 | 6 +4 |
| 73.50 | 5.2 | 6 +4 |
| 74.00 | 5.6 | 6 +4 |
| 74.50 | 5.9 | 6 +4 |
| 75.00 | 6.2 | 6 +4 +1 |
| 75.50 | 21.2 | 6 +4 +1 |
| 76.00 | 48.3 | 6 +4 +1 |
| 76.50 | 52.6 | 2 |
| 77.00 | 53.8 | 2 |
| 77.50 | 54.9 | 2 |
| 78.00 | 56.1 | 2 |
| 78.50 | 57.1 | 2 |
| 79.00 | 58.2 | 2 |
| 79.50 | 59.3 | 2 |
| 80.00 | 60.3 | 2 |

# ROUTING

```
****************************
*                          *
*  STONEHOUSE SECTION IVC  *
*     ATTENUATION BASIN    *
*                          *
*                          *
*                          *
****************************
```

Inflow Hydrograph: C:\96038\BMPS\IVA-2\FUT-2 .HYD
Rating Table file: C:\96038\BMPS\IVA-2\IVC .PND

----INITIAL CONDITIONS----
Elevation = 64.00 ft
Outflow = 0.00 cfs
Storage = 0.00 ac-ft

GIVEN POND DATA

| ELEVATION (ft) | OUTFLOW (cfs) | STORAGE (ac-ft) |
|---|---|---|
| 64.00 | 0.0 | 0.000 |
| 64.16 | 0.0 | 0.000 |
| 64.18 | 0.0 | 0.000 |
| 64.50 | 0.1 | 0.000 |
| 65.00 | 0.1 | 0.003 |
| 65.50 | 0.1 | 0.011 |
| 66.00 | 0.2 | 0.027 |
| 66.50 | 0.2 | 0.049 |
| 67.00 | 0.2 | 0.076 |
| 67.50 | 0.2 | 0.107 |
| 68.00 | 0.2 | 0.144 |
| 68.50 | 0.2 | 0.187 |
| 69.00 | 0.2 | 0.234 |
| 69.50 | 0.3 | 0.286 |
| 70.00 | 1.1 | 0.343 |
| 70.44 | 2.0 | 0.398 |
| 70.50 | 2.1 | 0.406 |
| 71.00 | 2.9 | 0.475 |
| 71.50 | 3.5 | 0.550 |
| 72.00 | 4.0 | 0.632 |
| 72.50 | 4.4 | 0.720 |
| 73.00 | 4.9 | 0.816 |
| 73.50 | 5.2 | 0.919 |
| 74.00 | 5.6 | 1.030 |
| 74.50 | 5.9 | 1.151 |
| 75.00 | 6.2 | 1.284 |
| 75.50 | 21.2 | 1.429 |
| 76.00 | 48.3 | 1.587 |
| 76.50 | 52.6 | 1.758 |
| 77.00 | 53.8 | 1.941 |
| 77.50 | 54.9 | 2.136 |

INTERMEDIATE ROUTING COMPUTATIONS

| 2S/t (cfs) | 2S/t + O (cfs) |
|---|---|
| 0.0 | 0.0 |
| 0.0 | 0.0 |
| 0.0 | 0.0 |
| 0.1 | 0.2 |
| 0.8 | 0.9 |
| 2.7 | 2.8 |
| 6.5 | 6.7 |
| 11.8 | 12.0 |
| 18.3 | 18.5 |
| 26.0 | 26.2 |
| 34.9 | 35.1 |
| 45.2 | 45.4 |
| 56.6 | 56.8 |
| 69.1 | 69.4 |
| 83.0 | 84.1 |
| 96.3 | 98.3 |
| 98.2 | 100.3 |
| 114.9 | 117.8 |
| 133.1 | 136.6 |
| 152.8 | 156.8 |
| 174.3 | 178.7 |
| 197.4 | 202.3 |
| 222.4 | 227.6 |
| 249.3 | 254.9 |
| 278.5 | 284.4 |
| 310.6 | 316.8 |
| 345.8 | 367.0 |
| 384.1 | 432.4 |
| 425.4 | 478.0 |
| 469.7 | 523.5 |
| 517.0 | 571.9 |

| GIVEN POND DATA | | | INTERMEDIATE ROUTING COMPUTATIONS | |
|---|---|---|---|---|
| ELEVATION (ft) | OUTFLOW (cfs) | STORAGE (ac-ft) | 2S/t (cfs) | 2S/t + 0 (cfs) |
| 78.00 | 56.1 | 2.345 | 567.5 | 623.6 |
| 78.50 | 57.1 | 2.568 | 621.3 | 678.4 |
| 79.00 | 58.2 | 2.806 | 679.0 | 737.2 |
| 79.50 | 59.3 | 3.061 | 740.7 | 800.0 |
| 80.00 | 60.3 | 3.332 | 806.3 | 866.6 |

Time increment (t) = 6.0 min.

********** SUMMARY OF ROUTING COMPUTATIONS **********

Pond File: C:\96038\BMPS\IVA-2\IVC .PND
Inflow Hydrograph: C:\96038\BMPS\IVA-2\FUT-2 .HYD
Outflow Hydrograph: C:\96038\BMPS\IVA-2\OUT-2 .HYD

Starting Pond W.S. Elevation = 64.00 ft

***** Summary of Peak Outflow and Peak Elevation *****

Peak Inflow = 30.00 cfs
Peak Outflow = 4.33 cfs vs 6
Peak Elevation = 72.42 ft

***** Summary of Approximate Peak Storage *****

Initial Storage = 0.00 ac-ft
Peak Storage From Storm = 0.71 ac-ft
---
Total Storage in Pond = 0.71 ac-ft

Warning: Inflow hydrograph truncated on left side.

```
****************************
*                          *
*  STONEHOUSE SECTION IVC  *
*     ATTENUATION BASIN    *
*                          *
*                          *
*                          *
****************************
```

Inflow Hydrograph: C:\96038\BMPS\IVA-2\FUT-10 .HYD
Rating Table file: C:\96038\BMPS\IVA-2\IVC .PND

----INITIAL CONDITIONS----
Elevation = 64.00 ft
Outflow = 0.00 cfs
Storage = 0.00 ac-ft

| GIVEN POND DATA | | | INTERMEDIATE ROUTING COMPUTATIONS | |
|---|---|---|---|---|
| ELEVATION (ft) | OUTFLOW (cfs) | STORAGE (ac-ft) | 2S/t (cfs) | 2S/t + O (cfs) |
| 64.00 | 0.0 | 0.000 | 0.0 | 0.0 |
| 64.16 | 0.0 | 0.000 | 0.0 | 0.0 |
| 64.18 | 0.0 | 0.000 | 0.0 | 0.0 |
| 64.50 | 0.1 | 0.000 | 0.1 | 0.2 |
| 65.00 | 0.1 | 0.003 | 0.8 | 0.9 |
| 65.50 | 0.1 | 0.011 | 2.7 | 2.8 |
| 66.00 | 0.2 | 0.027 | 6.5 | 6.7 |
| 66.50 | 0.2 | 0.049 | 11.8 | 12.0 |
| 67.00 | 0.2 | 0.076 | 18.3 | 18.5 |
| 67.50 | 0.2 | 0.107 | 26.0 | 26.2 |
| 68.00 | 0.2 | 0.144 | 34.9 | 35.1 |
| 68.50 | 0.2 | 0.187 | 45.2 | 45.4 |
| 69.00 | 0.2 | 0.234 | 56.6 | 56.8 |
| 69.50 | 0.3 | 0.286 | 69.1 | 69.4 |
| 70.00 | 1.1 | 0.343 | 83.0 | 84.1 |
| 70.44 | 2.0 | 0.398 | 96.3 | 98.3 |
| 70.50 | 2.1 | 0.406 | 98.2 | 100.3 |
| 71.00 | 2.9 | 0.475 | 114.9 | 117.8 |
| 71.50 | 3.5 | 0.550 | 133.1 | 136.6 |
| 72.00 | 4.0 | 0.632 | 152.8 | 156.8 |
| 72.50 | 4.4 | 0.720 | 174.3 | 178.7 |
| 73.00 | 4.9 | 0.816 | 197.4 | 202.3 |
| 73.50 | 5.2 | 0.919 | 222.4 | 227.6 |
| 74.00 | 5.6 | 1.030 | 249.3 | 254.9 |
| 74.50 | 5.9 | 1.151 | 278.5 | 284.4 |
| 75.00 | 6.2 | 1.284 | 310.6 | 316.8 |
| 75.50 | 21.2 | 1.429 | 345.8 | 367.0 |
| 76.00 | 48.3 | 1.587 | 384.1 | 432.4 |
| 76.50 | 52.6 | 1.758 | 425.4 | 478.0 |
| 77.00 | 53.8 | 1.941 | 469.7 | 523.5 |
| 77.50 | 54.9 | 2.136 | 517.0 | 571.9 |

GIVEN POND DATA

| ELEVATION (ft) | OUTFLOW (cfs) | STORAGE (ac-ft) |
|---|---|---|
| 78.00 | 56.1 | 2.345 |
| 78.50 | 57.1 | 2.568 |
| 79.00 | 58.2 | 2.806 |
| 79.50 | 59.3 | 3.061 |
| 80.00 | 60.3 | 3.332 |

INTERMEDIATE ROUTING COMPUTATIONS

| 2S/t (cfs) | 2S/t + O (cfs) |
|---|---|
| 567.5 | 623.6 |
| 621.3 | 678.4 |
| 679.0 | 737.2 |
| 740.7 | 800.0 |
| 806.3 | 866.6 |

Time increment (t) = 6.0 min.

********** SUMMARY OF ROUTING COMPUTATIONS **********

Pond File: C:\96038\BMPS\IVA-2\IVC .PND
Inflow Hydrograph: C:\96038\BMPS\IVA-2\FUT-10 .HYD
Outflow Hydrograph: C:\96038\BMPS\IVA-2\OUT-10 .HYD

Starting Pond W.S. Elevation = 64.00 ft

***** Summary of Peak Outflow and Peak Elevation *****

Peak Inflow = 56.00 cfs
Peak Outflow = 12.11 cfs vs 15
Peak Elevation = 75.20 ft

***** Summary of Approximate Peak Storage *****

Initial Storage = 0.00 ac-ft
Peak Storage From Storm = 1.34 ac-ft
---
Total Storage in Pond = 1.34 ac-ft

Warning: Inflow hydrograph truncated on left side.

```
****************************
*                          *
*  STONEHOUSE SECTION IVC  *
*     ATTENUATION BASIN    *
*                          *
*                          *
*                          *
****************************
```

Inflow Hydrograph: C:\96038\BMPS\IVA-2\FUT-100 .HYD
Rating Table file: C:\96038\BMPS\IVA-2\IVC .PND

----INITIAL CONDITIONS----
Elevation = 64.00 ft
Outflow = 0.00 cfs
Storage = 0.00 ac-ft

GIVEN POND DATA

| ELEVATION (ft) | OUTFLOW (cfs) | STORAGE (ac-ft) |
|---|---|---|
| 64.00 | 0.0 | 0.000 |
| 64.16 | 0.0 | 0.000 |
| 64.18 | 0.0 | 0.000 |
| 64.50 | 0.1 | 0.000 |
| 65.00 | 0.1 | 0.003 |
| 65.50 | 0.1 | 0.011 |
| 66.00 | 0.2 | 0.027 |
| 66.50 | 0.2 | 0.049 |
| 67.00 | 0.2 | 0.076 |
| 67.50 | 0.2 | 0.107 |
| 68.00 | 0.2 | 0.144 |
| 68.50 | 0.2 | 0.187 |
| 69.00 | 0.2 | 0.234 |
| 69.50 | 0.3 | 0.286 |
| 70.00 | 1.1 | 0.343 |
| 70.44 | 2.0 | 0.398 |
| 70.50 | 2.1 | 0.406 |
| 71.00 | 2.9 | 0.475 |
| 71.50 | 3.5 | 0.550 |
| 72.00 | 4.0 | 0.632 |
| 72.50 | 4.4 | 0.720 |
| 73.00 | 4.9 | 0.816 |
| 73.50 | 5.2 | 0.919 |
| 74.00 | 5.6 | 1.030 |
| 74.50 | 5.9 | 1.151 |
| 75.00 | 6.2 | 1.284 |
| 75.50 | 21.2 | 1.429 |
| 76.00 | 48.3 | 1.587 |
| 76.50 | 52.6 | 1.758 |
| 77.00 | 53.8 | 1.941 |
| 77.50 | 54.9 | 2.136 |

INTERMEDIATE ROUTING COMPUTATIONS

| 2S/t (cfs) | 2S/t + O (cfs) |
|---|---|
| 0.0 | 0.0 |
| 0.0 | 0.0 |
| 0.0 | 0.0 |
| 0.1 | 0.2 |
| 0.8 | 0.9 |
| 2.7 | 2.8 |
| 6.5 | 6.7 |
| 11.8 | 12.0 |
| 18.3 | 18.5 |
| 26.0 | 26.2 |
| 34.9 | 35.1 |
| 45.2 | 45.4 |
| 56.6 | 56.8 |
| 69.1 | 69.4 |
| 83.0 | 84.1 |
| 96.3 | 98.3 |
| 98.2 | 100.3 |
| 114.9 | 117.8 |
| 133.1 | 136.6 |
| 152.8 | 156.8 |
| 174.3 | 178.7 |
| 197.4 | 202.3 |
| 222.4 | 227.6 |
| 249.3 | 254.9 |
| 278.5 | 284.4 |
| 310.6 | 316.8 |
| 345.8 | 367.0 |
| 384.1 | 432.4 |
| 425.4 | 478.0 |
| 469.7 | 523.5 |
| 517.0 | 571.9 |

GIVEN POND DATA

| ELEVATION (ft) | OUTFLOW (cfs) | STORAGE (ac-ft) |
|---|---|---|
| 78.00 | 56.1 | 2.345 |
| 78.50 | 57.1 | 2.568 |
| 79.00 | 58.2 | 2.806 |
| 79.50 | 59.3 | 3.061 |
| 80.00 | 60.3 | 3.332 |

INTERMEDIATE ROUTING COMPUTATIONS

| 2S/t (cfs) | 2S/t + O (cfs) |
|---|---|
| 567.5 | 623.6 |
| 621.3 | 678.4 |
| 679.0 | 737.2 |
| 740.7 | 800.0 |
| 806.3 | 866.6 |

Time increment (t) = 6.0 min.

********** SUMMARY OF ROUTING COMPUTATIONS **********

Pond File: C:\96038\BMPS\IVA-2\IVC .PND
Inflow Hydrograph: C:\96038\BMPS\IVA-2\FUT-100 .HYD
Outflow Hydrograph: C:\96038\BMPS\IVA-2\OUT-100 .HYD

Starting Pond W.S. Elevation = 64.00 ft

***** Summary of Peak Outflow and Peak Elevation *****

Peak Inflow = 99.00 cfs
Peak Outflow = 52.90 cfs
Peak Elevation = 76.62 ft

***** Summary of Approximate Peak Storage *****

Initial Storage = 0.00 ac-ft
Peak Storage From Storm = 1.80 ac-ft
---
Total Storage in Pond = 1.80 ac-ft

Warning: Inflow hydrograph truncated on left side.

# DRAWDOWN CALCULATIONS

Langley and McDonald, P.C.
ENGINEERS • SURVEYORS • PLANNERS
LANDSCAPE ARCHITECTS • ENVIRONMENTAL CONSULTANTS
VIRGINIA BEACH • WILLIAMSBURG, VIRGINIA

Subject STONEHOUSE SECTION II-C
Computed By DLB Checked By

Project No. 96038
Client
Date 1/29/00 Sheet No. 1

SECTION II-C

ok

11.32 AC DRAINAGE AREA TO SWMF

$$\% \text{ IMP} = \frac{10.82(30)}{11.32} = 29\%$$

VOL PRODUCED BY 1" RAIN =

$$\frac{1''}{12}\left[.05 + .009(29)\right] 11.32 \text{ AC} = 0.29 \text{ AC-FT}$$

0.30 AC-FT PROVIDED AT ELEV 69.6

24-HR DRAWDOWN – USE 2" ORIFICE

$$\text{AVG } Q = 0.6\pi \frac{D^2}{4}\sqrt{2g\left(\frac{69.6-64}{2}\right)}$$

$$\text{AVG } Q = 0.6\pi \frac{(.167)^2}{4}\sqrt{64.4(2.8)}$$

AVG Q = 0.176 CFS

$$\frac{0.3 \text{ AC-FT} \times 43560}{0.176 \text{ CFS}} = 74{,}250 \text{ sec}$$

$$= \underline{\underline{20.6 \text{ HR}}}$$

Langley and McDonald, P.C.
ENGINEERS • SURVEYORS • PLANNERS
LANDSCAPE ARCHITECTS • ENVIRONMENTAL CONSULTANTS
VIRGINIA BEACH • WILLIAMSBURG, VIRGINIA

Subject: SHEET 3 OF 3
Computed By: DLB Checked By:

Project No.:
Client: STONEHOUSE
Date: 1/29/98 Sheet No.:

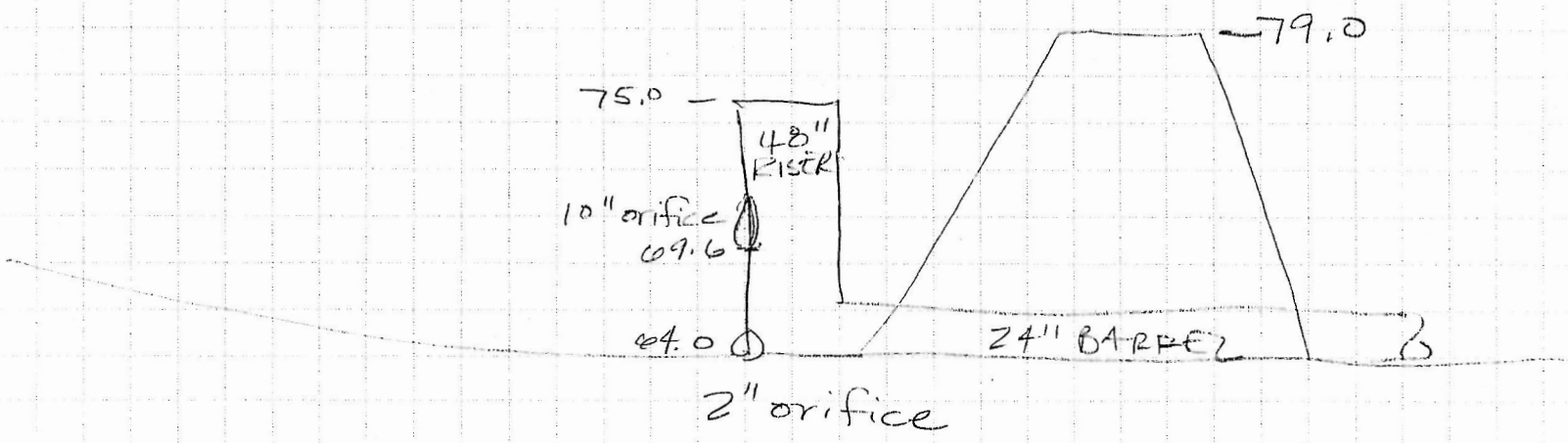


| STORM | Qin | Qout | Zmax | Qex |
|---|---|---|---|---|
| 2-YR | 30 cfs | 4 cfs | 72.42 | 6 cfs |
| 10-YR | 56 cfs | 12 cfs | 75.20 | 15 cfs |
| 100-YR | 99 cfs | 53 cfs | 76.62 | N/A |

# TEMPORARY SEDIMENT TRAP

# DESIGN

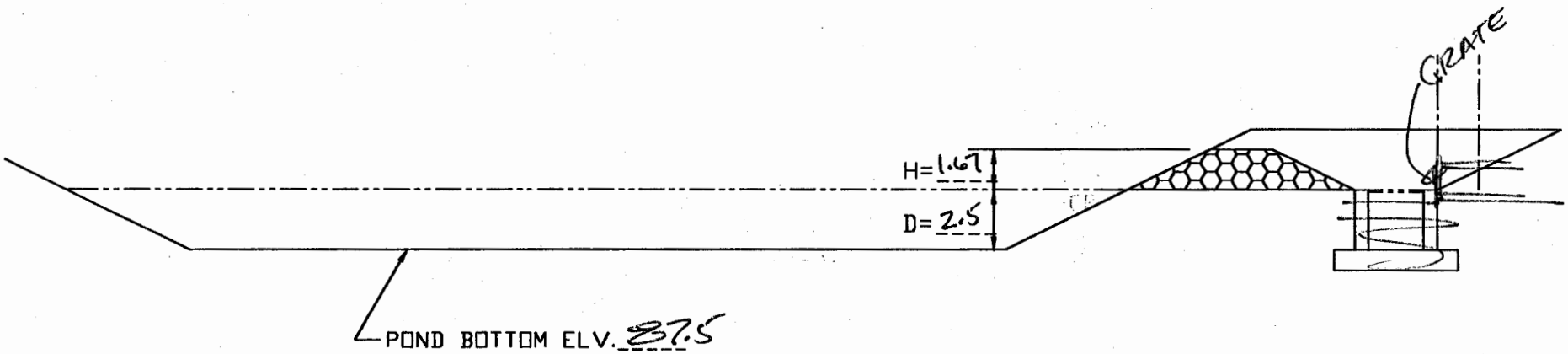


AREA 2.52 ACRES VOL REQD = 169 c.y.

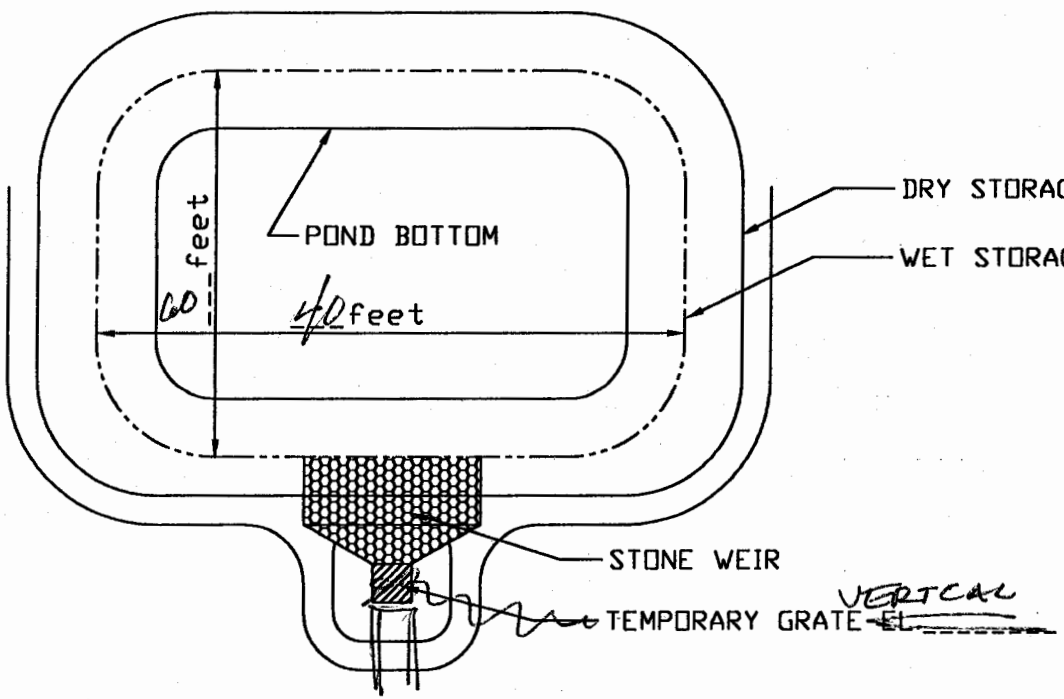


DRY STORAGE SURFACE, EL. 91.67, DSV= 182 C.Y.

WET STORAGE SURFACE EL. 90.0, WSV= 180 C.Y.

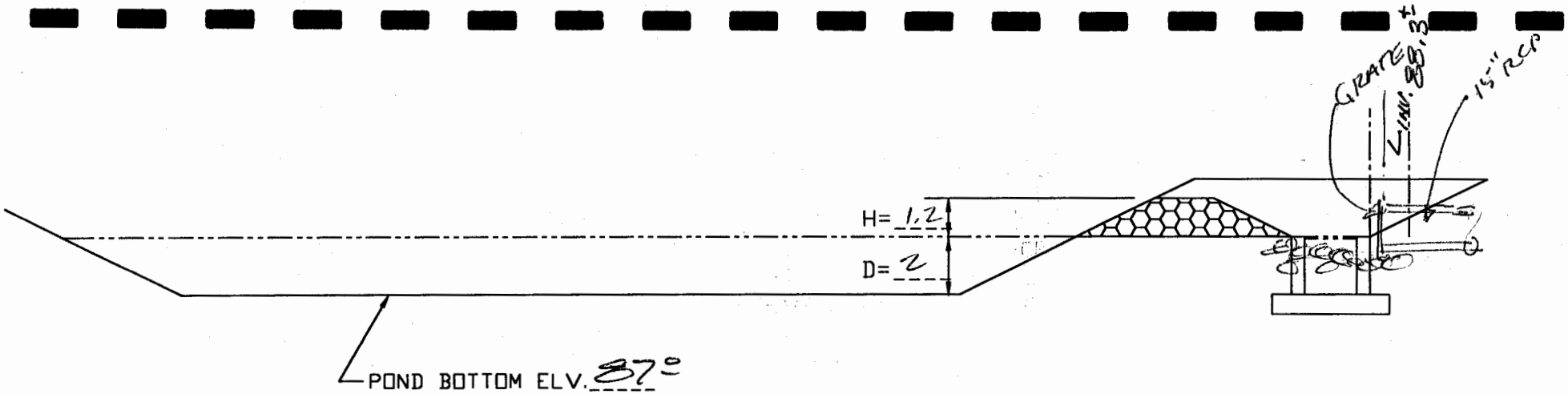


.92 ACRES  VOL REQ'D = 62 C.Y.

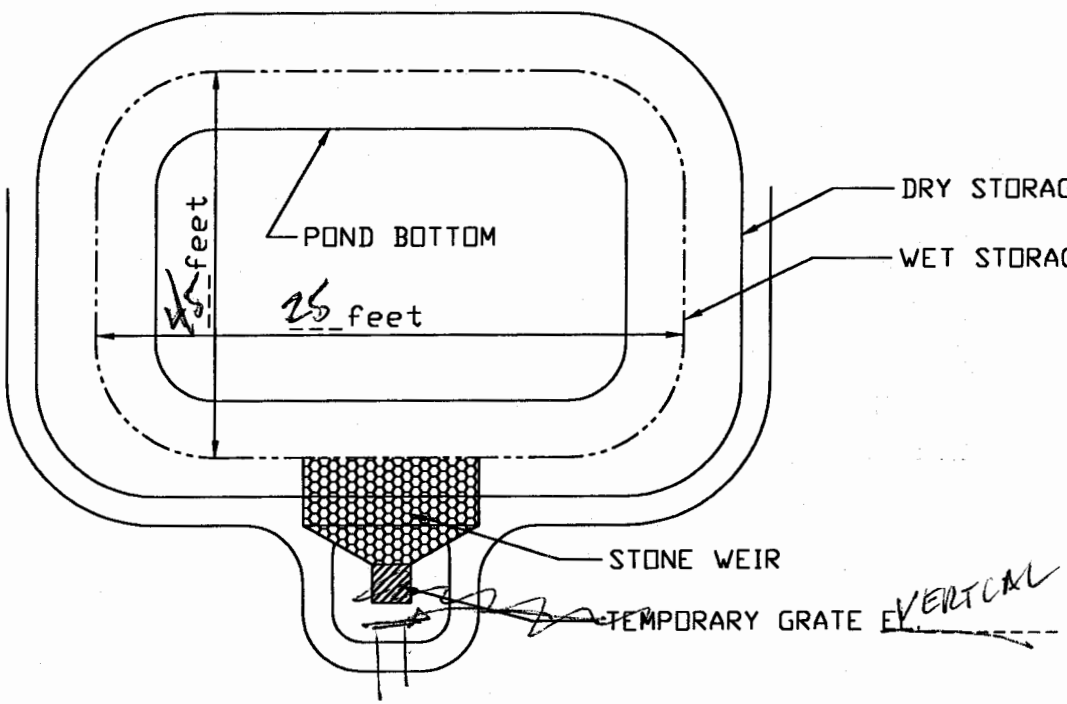

# ENVIRONMENTAL INVENTORY

An Environmental Inventory was compiled for Section IVC. The following is a description of the flora and fauna. Section IVC is bordered by Hole 12 to the south and a tributary of Ware Creek to the north.

The overstory vegetation in this Section is a mixture if hardwood and softwood species consisting of tulip poplar, (*Liriodendron tulipifera*), American beech (*Fagus gradnifolia*), loblloy pine (Pinus taeda) and red maple (*Acer rubrum*) with the understory comprised of flowering dogwood (*Cornus florida*), American holly *(Ilex opaca*), black oak (*Quercus velutina*), mockernut hickory (*Carya tomentosa*). The shrub layer contains very dense mountain laurel (*Kalmia latifolia*) and highbush blueberry (*Vaccinium corymbosum*). The herbaceous stratum consist of partridge berry (*Mitchella repens*), southern lady fern, (*Antherium asplenioides*), Christmas fern (*Polystichum acrostichoides*) sassafrass (*Sassafrass albidum*), strawberry bush (*Euonymus americanus*) and muscadine grape (*Vitus rotundifolia*). The vegetation along the border of the tributary of Ware Creek is typically emergent species comprised of wool grass (*Scirpus cyperinus*), sedges (*Cyperus spp.*), rushes (*Juncus spp.)*, violet (*Viola sp.*), and watercress (*Nasturtium officionale*).

The wildlife usage of the entire area would include species typical of mature woods and fallow fields including mammals such as white tailed deer, raccoons, gray squirrel, beaver, Virginia opossum, red fox and birds including robins, cardinals, sparrows, black birds, blue jays, doves, meadowlarks and turkey vultures. Reptiles and amphibians include usage would include toads, black snake, copperhead, and eastern garter snake.

# STORM SEWER DESIGN

# CALCULATIONS

**STORM SEWER DESIGN / RATIONAL METHOD 10 YEAR RETURN PERIOD**

**STONEHOUSE SECTION IV-C, DEVELOPMENT AREA 1**

Concrete Pipe,"n" = 0.013 Capacity @ 80% Full Depth

| VDOT L&D 229 | | Area Drained | Run-off Coeff. | "C x A | | Inlet Time | Time of Conc. | Rainfall intensity | RUNOFF | INVERT ELEVATIONS | | LENGTH | SLOPE | DIAM | CAPACITY | VELOCITY | TRAVEL"t" | REMARKS |
|---|---|---|---|---|---|---|---|---|---|---|---|---|---|---|---|---|---|---|
| FROM PT. | TO PT. | "Acres" | "C" | INCR. | ACCUM | "t" | "tc" | "i" | "QRational" | UPPER END | LOWER END | ft. | ft/ft | inch | cfs | fps | min. | |
| (1) | (2) | (3) | (4) | (5) | (6) | * | (7) | (8) | (9) | (10) | (11) | (12) | (13) | (14) | (15) | (16) | (17) | |
| **SYSTEM "S"** | | | | | | | | | | | | | | | | | | |
| DA # 1 | S-7 | 2.52 | 0.3 | 0.76 | | | | | | | | | | | | | | |
| DA # 2 | S-7 | 0.92 | 0.3 | 0.28 | 1.032 | 15.6 | 15.56 | 5.0 | 5.18 | | | | | | | | | |
| **INLET S-7** | S-6 | | | | | | | | | 88.45 | 88.10 | 50 | 0.0070 | 15 | 5.28 | 5.02 | 0.17 | |
| PAVEMENT | S-6A | 0.26 | 0.9 | 0.23 | | | | | | | | | | | | | | |
| SHOULDER | S-6A | 0.03 | 0.3 | 0.01 | 0.243 | 4.2 | 15.73 | 5.0 | 1.21 | | | | | | | | | |
| **DI-3C @ S-6A** | S-6 | | | | | | | | | 89.60 | 89.30 | 30 | 0.0100 | 15 | 6.31 | 6.00 | 0.08 | |
| PAVEMENT | S-6 | 0.26 | 0.9 | 0.23 | | | | | | | | | | | | | | |
| SHOULDER | S-6 | 0.05 | 0.3 | 0.02 | 1.524 | 4.2 | 15.81 | 5.0 | 7.60 | | | | | | | | | |
| **DI-3C @ S-6** | MH @ S-5 | | | | | | | | | 88.00 | 86.90 | 200 | 0.0055 | 18 | 7.61 | 5.02 | 0.66 | |
| **MH-I @ S-5** | MH @ S-4 | | | | | | | | | 86.80 | 85.10 | 300 | 0.0057 | 18 | 7.73 | 5.10 | 0.98 | |
| **MH-1 @ S-4** | S-3 | | | | | | | | | 85.00 | 84.40 | 60 | 0.0100 | 18 | 10.27 | 6.77 | 0.15 | |
| PAVEMENT | S-3 | 0.125 | 0.9 | 0.11 | | | | | | | | | | | | | | |
| PAVEMENT | S-3 | 0.125 | 0.9 | 0.11 | 1.749 | 3.2 | 17.60 | 4.7 | 8.31 | | | | | | | | | |
| **DI-3C @ S-3** | MH @ S-2 | | | | | | | | | 84.30 | 72.30 | 200 | 0.0600 | 18 | 25.15 | 16.60 | 0.20 | |
| **MH @ S-2** | MH @ S-1 | | | | | | | | | 66.00 | 56.40 | 120 | 0.0800 | 18 | 29.04 | 19.16 | 0.10 | |
| **MH @ S-1** | ES @ S-0 | | | | | | | | | 49.50 | 48.50 | 25 | 0.0400 | 18 | 20.54 | 13.55 | 0.03 | |
| | | 4.29 | | | | | | | | | | | | | | | | |
| PAVEMENT | U-8 | 0.11 | 0.9 | 0.10 | | | | | | | | | | | | | | |
| SHOULDER | U-8 | 0.07 | 0.3 | 0.02 | 0.12 | 3.2 | 5.00 | 7.2 | 0.86 | | | | | | | | | |
| **DI-3C @ U-8** | U-7 | | | | | | | | | 97.30 | 97.00 | 30 | 0.0100 | 15 | 6.31 | 6.00 | 0.08 | |
| PAVEMENT | U-7 | 0.11 | 0.9 | 0.10 | | | | | | | | | | | | | | |
| LAWN AREA | U-7 | 0.84 | 0.3 | 0.25 | 0.471 | 1.8 | 5.00 | 7.2 | 3.39 | | | | | | | | | |
| **DI-3C @ U-7** | MH @ U-6 | | | | | | | | | 96.90 | 96.27 | 120 | 0.0053 | 15 | 4.58 | 4.35 | 0.46 | |
| **MH-1 @ U-6** | U-5 | | | | | | | | | 96.17 | 92.25 | 245 | 0.0160 | 15 | 7.99 | 7.59 | 0.54 | |
| PAVEMENT | U-5A | 0.1 | 0.9 | 0.09 | 0.09 | 0.9 | 5.00 | 7.2 | 0.65 | | | | | | | | | |
| **DI-3C @ U-5A** | U-5 | | | | | | | | | 94.80 | 92.30 | 125 | 0.0200 | 15 | 8.93 | 8.48 | 0.25 | |
| PAVEMENT | U-5 | 0.18 | 0.9 | 0.16 | | | | | | | | | | | | | | |
| LAWN AREA | U-5 | 0.43 | 0.3 | 0.13 | 0.852 | 1.6 | 5.00 | 7.2 | 6.14 | | | | | | | | | |
| **DI-3C @ U-5** | U-4 | | | | | | | | | 92.10 | 91.80 | 32 | 0.0094 | 15 | 6.11 | 5.81 | 0.09 | |
| PAVEMENT | U-4 | 0.1 | 0.9 | 0.09 | | | | | | | | | | | | | | |
| LAWN AREA | U-4 | 0.27 | 0.3 | 0.08 | 1.023 | 1.3 | 5.00 | 7.2 | 7.37 | | | | | | | | | |
| **DI-3C @ U-4** | MH @ U-3 | | | | | | | | | 91.70 | 90.80 | 48 | 0.0187 | 15 | 8.65 | 8.22 | 0.10 | |
| **MH-1 @ U-3** | U-2 | | | | | | | | | 90.70 | 87.50 | 168 | 0.0190 | 15 | 8.71 | 8.28 | 0.34 | |
| PAVEMENT | U-2 | 0.23 | 0.9 | 0.21 | | | | | | | | | | | | | | |
| LAWN AREA | U-2 | 0.2 | 0.3 | 0.06 | 1.29 | 1.4 | 5.08 | 7.2 | 9.26 | | | | | | | | | |
| **DI-3C @ U-2** | MH @ U-1 | | | | | | | | | 87.40 | 73.40 | 140 | 0.1000 | 15 | 19.97 | 18.97 | 0.12 | |
| **DROP MH @ U-I** | ES @ U-0 | | | | | | | | | 68.50 | 67.50 | 40 | 0.0250 | 15 | 9.98 | 9.49 | 0.07 | |
| | | 2.64 | | | | | | | | | | | | | | | | |

| INLET STATION | Outlet Water Surface | FRICTION LOSS IN PIPE | | | | | | JUNCTION LOSS | | | | | | | | | | | | H Adjusted | Inlet Water Surface Elevation | Rim Elevation |
|---|---|---|---|---|---|---|---|---|---|---|---|---|---|---|---|---|---|---|---|---|---|---|
| | | $D_o$ | $Q_o$ | $L_o$ | $n_o$ | $S_{fo}$ | $H_f$ | $V_o$ | $H_o$ | $Q_i$ | $V_i$ | $Q_i \times V_i$ | $V^2/2g$ | $H_i$ | $\Delta$ | $H_{delta}$ | $H_t$ | .3 x $H_t$ | 0.5 x $H_t$ | | | |
| 1 | 2 | 3 | 4 | 5 | 5A | 6 | 7 | 8 | 9 | 10 | 11 | 12 | 13 | 14 | 15 | 16 | 17 | 18 | 19 | 20 | 21 | 22 |
| SYSTEM "U" | | | | | | | | | | | | | | | | | | | | | | |
| U-1 MH-1 /DROP | **68.43** | **15** | **9.25** | **40** | **0.013** | 0.0205 | 0.820 | 7.54 | 0.22 | 9.25 | 16.22 | 150 | 4.09 | 1.43 | 68 | 2.44 | 4.09 | NA | -2.05 | 2.87 | 71.30 | 78.00 |
| U-2 DI-3C | **73.99** | **15** | **9.25** | **140** | **0.013** | 0.0205 | 2.871 | 7.54 | 0.22 | 7.37 | 8.1 | 60 | 1.02 | 0.36 | 8 | 0.05 | 0.63 | 0.19 | -0.32 | 3.38 | 77.37 | 92.10 |
| U-3 MH-1 | **88.37** | **15** | **7.37** | **168** | **0.013** | 0.0130 | 2.187 | 6.01 | 0.14 | 7.37 | 8.05 | 59 | 1.01 | 0.35 | 40 | 0.38 | 0.87 | NA | -0.44 | 2.62 | 90.99 | 95.85 |
| U-4 DI-3C | **91.67** | **15** | **7.37** | **48** | **0.013** | 0.0130 | 0.625 | 6.01 | 0.14 | 6.14 | 5.82 | 36 | 0.53 | 0.18 | 50 | 0.25 | 0.57 | 0.17 | -0.29 | 1.08 | 92.75 | 95.65 |
| U-5 DI-3C | **92.80** | **15** | **6.14** | **32** | **0.013** | 0.0090 | 0.289 | 5.00 | 0.10 | 3.39 | 6.34 | 21 | 0.62 | 0.22 | 90 | 0.44 | 0.75 | 0.23 | -0.38 | 0.89 | 93.69 | 95.65 |
| | | | | | | | | | | 0.65 | 4.3 | | | | | | | | | | | |
| U-6 MH-1 | **92.81** | **15** | **3.39** | **245** | **0.013** | 0.0028 | 0.675 | 2.76 | 0.03 | 3.39 | 4.17 | 14 | 0.27 | 0.09 | 8 | 0.01 | 0.14 | NA | -0.07 | 0.74 | 93.55 | 102.00 |
| U-7 DI-3C | **97.06** | **15** | **3.39** | **120** | **0.013** | 0.0028 | 0.330 | 2.76 | 0.03 | 0.86 | 3.66 | 3 | 0.21 | 0.07 | 90 | 0.15 | 0.25 | 0.07 | -0.12 | 0.53 | 97.59 | 100.74 |
| U-8 DI-3C | **97.59** | **15** | **0.86** | **30** | **0.013** | 0.0002 | 0.005 | 0.70 | 0.00 | 0 | 0 | 0 | 0.00 | 0.00 | 0 | 0.00 | 0.00 | 0.00 | -0.00 | 0.01 | 97.60 | 100.74 |
| U-5A DI-3C | **93.69** | **15** | **0.65** | **125** | **0.013** | 0.0001 | 0.013 | 0.53 | 0.00 | 0 | 0 | 0 | 0.00 | 0.00 | 0 | 0.00 | 0.00 | 0.00 | -0.00 | 0.01 | 93.70 | 98.43 |
| SYSTEM "S" | | | | | | | | | | | | | | | | | | | | | | |
| S-1 MH-1 / DROP | **49.16** | **18** | **8.31** | **25** | **0.013** | 0.0063 | 0.156 | 4.70 | 0.09 | 8.31 | 14.41 | 120 | 3.22 | 1.13 | 0 | 0.00 | 1.21 | NA | -0.61 | 0.76 | 49.92 | 59.00 |
| S-2 MH-1 / DROP | **56.94** | **18** | **8.31** | **120** | **0.013** | 0.0063 | 0.751 | 4.70 | 0.09 | 8.31 | 12.98 | 108 | 2.62 | 0.92 | 38 | 0.94 | 1.94 | NA | -0.97 | 1.72 | 58.66 | 82.50 |
| S-3 DI-3F | **72.89** | **18** | **8.31** | **200** | **0.013** | 0.0063 | 1.252 | 4.70 | 0.09 | 7.6 | 6.48 | 49 | 0.65 | 0.23 | 40 | 0.25 | 0.56 | 0.17 | -0.28 | 1.70 | 74.59 | 94.75 |
| S-4 MH-1 | **85.35** | **18** | **7.6** | **60** | **0.013** | 0.0052 | 0.314 | 4.30 | 0.07 | 7.6 | 5.11 | 39 | 0.41 | 0.14 | 73 | 0.25 | 0.47 | NA | -0.23 | 0.55 | 85.90 | 96.00 |
| S-5 MH-1 | **86.28** | **18** | **7.6** | **300** | **0.013** | 0.0052 | 1.570 | 4.30 | 0.07 | 7.6 | 5.02 | 38 | 0.39 | 0.14 | 15 | 0.04 | 0.25 | NA | -0.12 | 1.69 | 87.97 | 96.50 |
| S-6 DI-3C | **88.10** | **18** | **7.6** | **200** | **0.013** | 0.0052 | 1.047 | 4.30 | 0.07 | 5.18 | 5.01 | 26 | 0.39 | 0.14 | 90 | 0.27 | 0.48 | 0.14 | -0.24 | 1.43 | 89.53 | 93.07 |
| | | | | | | | | | | 1.21 | 4.03 | | | | | | | | | | | |
| S-7 INLET | **89.53** | **15** | **5.18** | **50** | **0.013** | 0.0064 | 0.322 | 4.22 | 0.07 | 0 | 0 | 0 | 0.00 | 0.00 | 0 | 0.00 | 0.07 | 0.02 | -0.03 | 0.38 | 89.91 | 91.25 |
| S-6A DI-3C | **89.67** | **15** | **1.21** | **30** | **0.013** | 0.0004 | 0.011 | 0.99 | 0.00 | 0 | 0 | 0 | 0.00 | 0.00 | 0 | 0.00 | 0.00 | 0.00 | -0.00 | 0.01 | 89.68 | 93.07 |

**STORM SEWER DESIGN** **STONEHOUSE SECTION IV-C, DEVELOPMENT AREA 1**

Concrete Pipe,"n" = 0.013

| VDOT L&D 229 | | INVERT ELEVATIONS | | LENGTH | SLOPE | DIAM | RUNOFF | Yn | VELOCITY | REMARKS |
|---|---|---|---|---|---|---|---|---|---|---|
| FROM PT. | TO PT. | UPPER END | LOWER END | ft. | ft/ft | inch | "QRational" | feet | fps | |
| (1) | (2) | (10) | (11) | (12) | (13) | (14) | (9) | (15) | (16) | |
| **SYSTEM "U"** | | | | | | | | | | |
| **DROP MH @ U-I** | ES @ U-0 | 68.50 | 67.50 | 40 | 0.0250 | 15 | 9.25 | 0.93 | 9.42 | |
| **DI-3C @ U-2** | MH @ U-1 | 87.40 | 73.40 | 140 | 0.1000 | 15 | 9.25 | 0.59 | 16.22 | |
| **MH-1 @ U-3** | U-2 | 90.70 | 87.50 | 168 | 0.0190 | 15 | 7.37 | 0.87 | 8.1 | |
| **DI-3C @ U-4** | MH @ U-3 | 91.70 | 90.80 | 48 | 0.0187 | 15 | 7.37 | 0.87 | 8.05 | |
| **DI-3C @ U-5** | U-4 | 92.10 | 91.80 | 32 | 0.0094 | 15 | 6.14 | 1 | 5.82 | |
| **DI-3C @ U-5A** | U-5 | 94.80 | 92.30 | 125 | 0.0200 | 15 | 0.65 | 0.23 | 4.3 | |
| **MH-1 @ U-6** | U-5 | 96.17 | 92.25 | 245 | 0.0160 | 15 | 3.39 | 0.56 | 6.34 | |
| **DI-3C @ U-7** | MH @ U-6 | 96.90 | 96.27 | 120 | 0.0053 | 15 | 3.39 | 0.79 | 4.17 | |
| **DI-3C @ U-8** | U-7 | 97.30 | 97.00 | 30 | 0.0100 | 15 | 0.86 | 0.31 | 3.66 | |
| **SYSTEM "S"** | | | | | | | | | | |
| **MH @ S-1** | ES @ S-0 | 49.50 | 48.50 | 25 | 0.0400 | 18 | 8.31 | 0.66 | 11.2 | |
| **MH @ S-2** | MH @ S-1 | 66.00 | 56.40 | 120 | 0.0800 | 18 | 8.31 | 0.54 | 14.41 | |
| **DI-3C @ S-3** | MH @ S-2 | 84.30 | 72.30 | 200 | 0.0600 | 18 | 8.31 | 0.59 | 12.98 | |
| **MH-1 @ S-4** | S-3 | 85.00 | 84.40 | 60 | 0.0100 | 18 | 7.60 | 0.95 | 6.48 | |
| **MH-I @ S-5** | MH @ S-4 | 86.80 | 85.10 | 300 | 0.0057 | 18 | 7.60 | 1.18 | 5.11 | |
| **DI-3C @ S-6** | MH @ S-5 | 88.00 | 86.90 | 200 | 0.0055 | 18 | 7.60 | 1.2 | 5.02 | |
| **DI-3C @ S-6A** | S-6 | 89.60 | 89.30 | 30 | 0.0100 | 15 | 1.21 | 0.37 | 4.03 | |
| **INLET S-7** | S-6 | 88.45 | 88.10 | 50 | 0.0070 | 15 | 5.18 | 0.98 | 5.01 | |

SEDIMENT TRAP DESIGN : STONEHOUSE SECTION IV C

DRAINED AREA = 0.92 acres WSV / DSV REQD = 1669.8 c.f. ~>~> 62 c.y.

WEIR WIDTH REQD. = 6 feet

| | LT | WT | AT | Z | D / H | LB | WB | AB | VOL | |
|---|---|---|---|---|---|---|---|---|---|---|
| WET STORAGE | 45 | 25 | 1125 | 2 | 2 | 37 | 17 | 629 | 65 | 64 |
| DRY STORAGE : | 52.2 | 32.2 | 1681 | 3 | 1.2 | 45 | 25 | 1125 | 62 | 62 |

DRAINED AREA = 2.52 acres WSV / DSV REQD = 4573.8 c.f. ~>~> 169 c.y.

WEIR WIDTH REQD. = 16 feet

| | LT | WT | AT | Z | D / H | LB | WB | AB | VOL | |
|---|---|---|---|---|---|---|---|---|---|---|
| WET STORAGE | 60 | 40 | 2400 | 2 | 2.5 | 50 | 30 | 1500 | 181 | 179 |
| DRY STORAGE : | 70.02 | 50.02 | 3502 | 3 | 1.67 | 60 | 40 | 2400 | 183 | 181 |

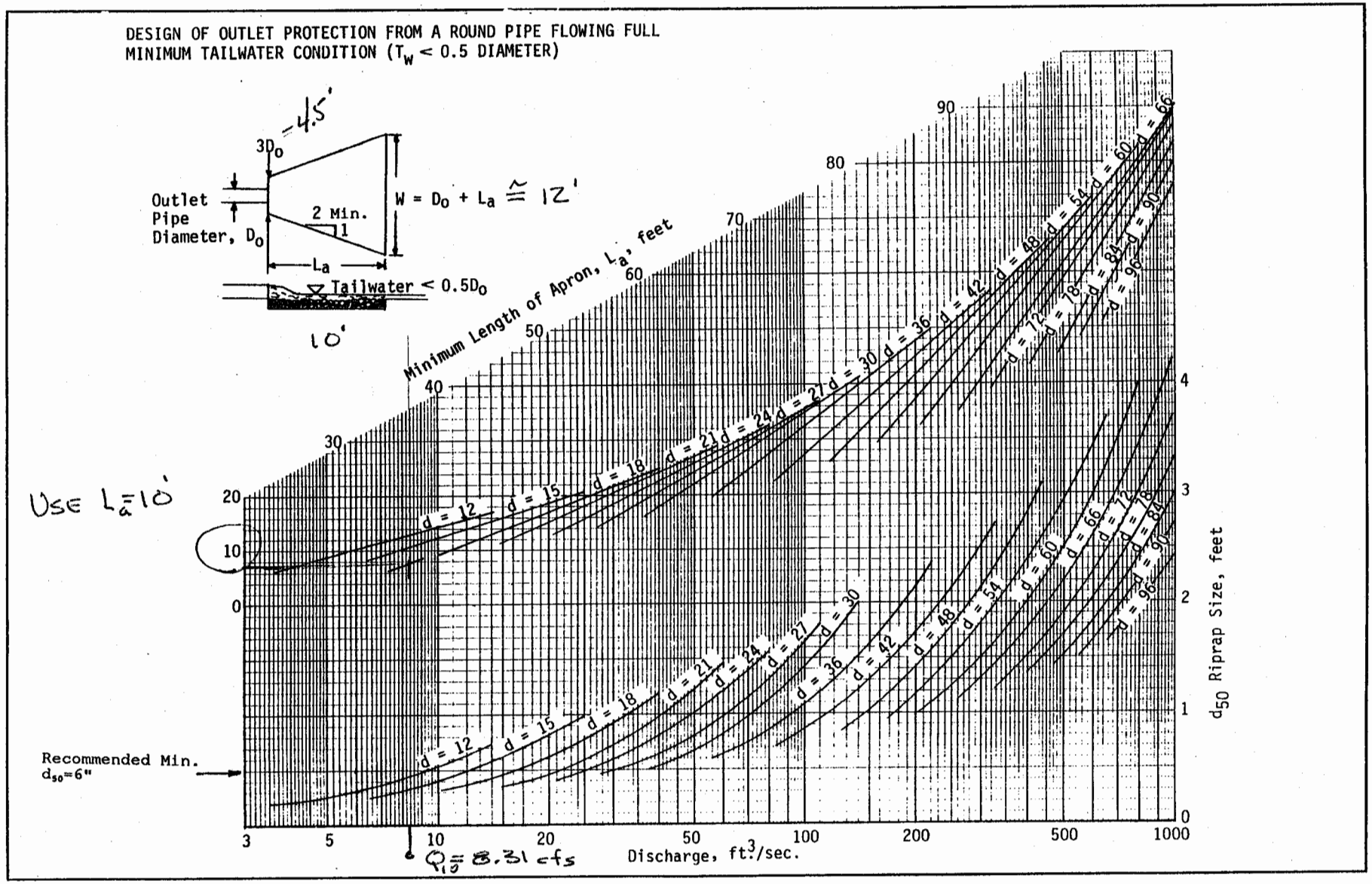


OUTFALL @ S-0

Source: USDA-SCS

Plate 3.18-3

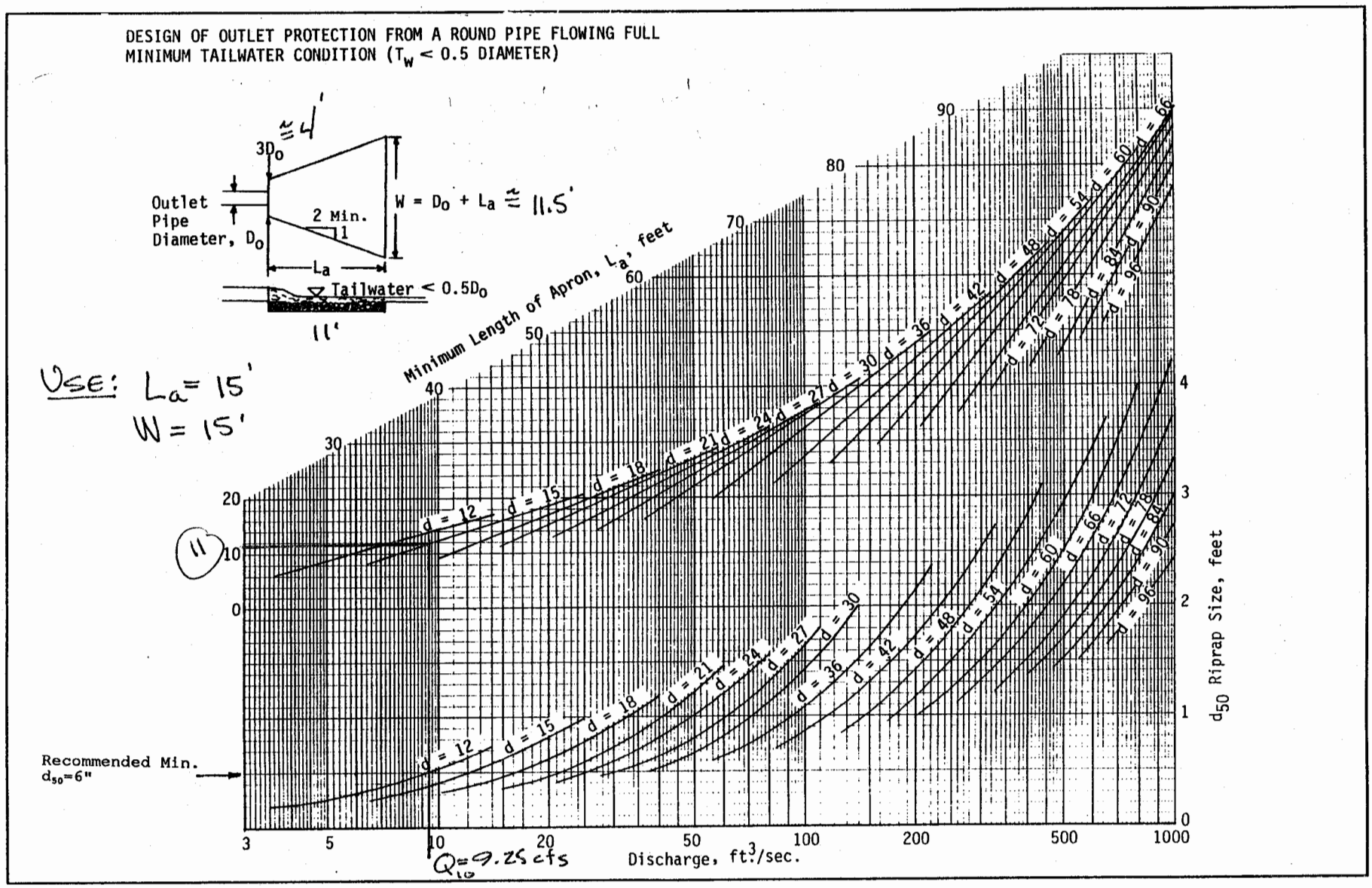


OUTFALL @ U-O

Source: USDA-SCS



Plate 3.18-3

# STORMWATER

# INLET

# CALCULATIONS

PROJECT 96038.10771
HEC12 Version: V2.91 Run Date: 02-16-1998

---

INLET NUMBER S-3 LENGTH 8.0 STATION 43+00

DRAINAGE AREA = 0.125 ACRES C VALUE = .900 CA = 0.112
DRAINAGE AREA = 0.125 ACRES C VALUE = .900 CA = 0.112

FOR THE FIRST SIDE
SUM CA= 0.112 INT= 3.50 CFS= 0.394 CO= 0.000 GUTTER FLOW= 0.394
FOR THE OTHER SIDE
SUM CA= 0.112 INT= 3.50 CFS= 0.394 CO= 0.000 GUTTER FLOW= 0.394
AT THE INLET

SUM CA= 0.225 INT= 3.50 CFS= 0.787 CO= 0.000 GUTTER FLOW= 0.787

GUTTER SLOPE = 0.0001 FT/FT PAVEMENT CROSS SLOPE = 0.0208 FT/FT

SPREAD AT A SLOPE OF .000 (ft./ft.) AND 0.39 (cfs) IS 10.53 (ft.)

XXXXXXXXXX CURB INLET IN A SUMP XXXXXXXXXX
P EFFEC. LENGTH (ft) = 11.60 H (ft) = 0.385
DEPTH OF WATER (ft) = 0.10 SPREAD (ft) = 4.59

---

INLET NUMBER S-6 LENGTH 8.0 STATION 36+75R

DRAINAGE AREA = 0.140 ACRES C VALUE = .900 CA = 0.126
DRAINAGE AREA = 0.120 ACRES C VALUE = .900 CA = 0.108
DRAINAGE AREA = 0.030 ACRES C VALUE = .300 CA = 0.009

FOR THE FIRST SIDE
SUM CA= 0.126 INT= 3.50 CFS= 0.441 CO= 0.000 GUTTER FLOW= 0.441
FOR THE OTHER SIDE
SUM CA= 0.117 INT= 3.50 CFS= 0.410 CO= 0.000 GUTTER FLOW= 0.410
AT THE INLET

SUM CA= 0.243 INT= 3.50 CFS= 0.850 CO= 0.000 GUTTER FLOW= 0.850

GUTTER SLOPE = 0.0001 FT/FT PAVEMENT CROSS SLOPE = 0.0208 FT/FT

SPREAD AT A SLOPE OF .000 (ft./ft.) AND 0.44 (cfs) IS 11.07 (ft.)

XXXXXXXXXX CURB INLET IN A SUMP XXXXXXXXXX
P EFFEC. LENGTH (ft) = 11.60 H (ft) = 0.385
DEPTH OF WATER (ft) = 0.10 SPREAD (ft) = 4.83

INLET NUMBER S-6A LENGTH 8.0 STATION 36+75L

DRAINAGE AREA = 0.140 ACRES C VALUE = .900 CA = 0.126
DRAINAGE AREA = 0.120 ACRES C VALUE = .900 CA = 0.108
DRAINAGE AREA = 0.050 ACRES C VALUE = .300 CA = 0.015

FOR THE FIRST SIDE
SUM CA= 0.126 INT= 3.50 CFS= 0.441 CO= 0.000 GUTTER FLOW= 0.441
FOR THE OTHER SIDE
SUM CA= 0.123 INT= 3.50 CFS= 0.430 CO= 0.000 GUTTER FLOW= 0.430
AT THE INLET

SUM CA= 0.249 INT= 3.50 CFS= 0.872 CO= 0.000 GUTTER FLOW= 0.872

GUTTER SLOPE = 0.0001 FT/FT PAVEMENT CROSS SLOPE = 0.0208 FT/FT

SPREAD AT A SLOPE OF .000 (ft./ft.) AND 0.44 (cfs) IS 11.07 (ft.)

XXXXXXXXXX CURB INLET IN A SUMP XXXXXXXXXX
P EFFEC. LENGTH (ft) = 11.60 H (ft) = 0.385
DEPTH OF WATER (ft) = 0.10 SPREAD (ft) = 4.91

PROJECT 96038.107.71
HEC12 Version: V2.91 Run Date: 02-17-1998

---

INLET NUMBER U-8 LENGTH 6.0 STATION 30+25

DRAINAGE AREA = 0.080 ACRES C VALUE = .900 CA = 0.072
DRAINAGE AREA = 0.050 ACRES C VALUE = .300 CA = 0.015
DRAINAGE AREA = 0.030 ACRES C VALUE = .900 CA = 0.027
DRAINAGE AREA = 0.030 ACRES C VALUE = .300 CA = 0.009

FOR THE FIRST SIDE
SUM CA= 0.087 INT= 3.50 CFS= 0.304 CO= 0.000 GUTTER FLOW= 0.304
FOR THE OTHER SIDE
SUM CA= 0.036 INT= 3.50 CFS= 0.126 CO= 0.000 GUTTER FLOW= 0.126
AT THE INLET

SUM CA= 0.123 INT= 3.50 CFS= 0.430 CO= 0.000 GUTTER FLOW= 0.430

GUTTER SLOPE = 0.0001 FT/FT PAVEMENT CROSS SLOPE = 0.0208 FT/FT

SPREAD AT A SLOPE OF .000 (ft./ft.) AND 0.30 (cfs) IS 9.36 (ft.)

XXXXXXXXXX CURB INLET IN A SUMP XXXXXXXXXX
P EFFEC. LENGTH (ft) = 9.60 H (ft) = 0.385
DEPTH OF WATER (ft) = 0.07 SPREAD (ft) = 3.48

---

INLET NUMBER U-7 LENGTH 12.0 STATION 30+25R

DRAINAGE AREA = 0.080 ACRES C VALUE = .900 CA = 0.072
DRAINAGE AREA = 0.360 ACRES C VALUE = .300 CA = 0.108
DRAINAGE AREA = 0.030 ACRES C VALUE = .900 CA = 0.027
DRAINAGE AREA = 0.480 ACRES C VALUE = .300 CA = 0.144

FOR THE FIRST SIDE
SUM CA= 0.180 INT= 3.50 CFS= 0.630 CO= 0.000 GUTTER FLOW= 0.630
FOR THE OTHER SIDE
SUM CA= 0.171 INT= 3.50 CFS= 0.599 CO= 0.000 GUTTER FLOW= 0.599
AT THE INLET

SUM CA= 0.351 INT= 3.50 CFS= 1.229 CO= 0.000 GUTTER FLOW= 1.229

GUTTER SLOPE = 0.0001 FT/FT PAVEMENT CROSS SLOPE = 0.0208 FT/FT

SPREAD AT A SLOPE OF .000 (ft./ft.) AND 0.63 (cfs) IS 12.91 (ft.)

XXXXXXXXXX CURB INLET IN A SUMP XXXXXXXXXX
P EFFEC. LENGTH (ft) = 15.60 H (ft) = 0.385
DEPTH OF WATER (ft) = 0.11 SPREAD (ft) = 5.06

INLET NUMBER U-5 LENGTH 10.0 STATION 12+25R

DRAINAGE AREA = 0.090 ACRES C VALUE = .900 CA = 0.081
DRAINAGE AREA = 0.330 ACRES C VALUE = .300 CA = 0.099
DRAINAGE AREA = 0.090 ACRES C VALUE = .900 CA = 0.081
DRAINAGE AREA = 0.100 ACRES C VALUE = .300 CA = 0.030

FOR THE FIRST SIDE
SUM CA= 0.180 INT= 3.50 CFS= 0.630 CO= 0.000 GUTTER FLOW= 0.630
FOR THE OTHER SIDE
SUM CA= 0.111 INT= 3.50 CFS= 0.389 CO= 0.000 GUTTER FLOW= 0.389
AT THE INLET

SUM CA= 0.291 INT= 3.50 CFS= 1.019 CO= 0.000 GUTTER FLOW= 1.019

GUTTER SLOPE = 0.0001 FT/FT PAVEMENT CROSS SLOPE = 0.0208 FT/FT

SPREAD AT A SLOPE OF .000 (ft./ft.) AND 0.63 (cfs) IS 12.91 (ft.)

XXXXXXXXXX CURB INLET IN A SUMP XXXXXXXXXX
P EFFEC. LENGTH (ft) = 13.60 H (ft) = 0.385
DEPTH OF WATER (ft) = 0.10 SPREAD (ft) = 4.90

---

INLET NUMBER U-5A LENGTH 4.0 STATION 8+50

DRAINAGE AREA = 0.050 ACRES C VALUE = .900 CA = 0.045
DRAINAGE AREA = 0.050 ACRES C VALUE = .900 CA = 0.045

FOR THE FIRST SIDE
SUM CA= 0.045 INT= 3.50 CFS= 0.157 CO= 0.000 GUTTER FLOW= 0.157
FOR THE OTHER SIDE
SUM CA= 0.045 INT= 3.50 CFS= 0.157 CO= 0.000 GUTTER FLOW= 0.157
AT THE INLET

SUM CA= 0.090 INT= 3.50 CFS= 0.315 CO= 0.000 GUTTER FLOW= 0.315

GUTTER SLOPE = 0.0001 FT/FT PAVEMENT CROSS SLOPE = 0.0208 FT/FT

SPREAD AT A SLOPE OF .000 (ft./ft.) AND 0.16 (cfs) IS 6.73 (ft.)

XXXXXXXXXX CURB INLET IN A SUMP XXXXXXXXXX
P EFFEC. LENGTH (ft) = 7.60 H (ft) = 0.385
DEPTH OF WATER (ft) = 0.07 SPREAD (ft) = 3.30

INLET NUMBER U-4 LENGTH 10.0 STATION 12+25L

DRAINAGE AREA = 0.080 ACRES C VALUE = .900 CA = 0.072
DRAINAGE AREA = 0.270 ACRES C VALUE = .300 CA = 0.081
DRAINAGE AREA = 0.020 ACRES C VALUE = .900 CA = 0.018

FOR THE FIRST SIDE
SUM CA= 0.153 INT= 3.50 CFS= 0.535 CO= 0.000 GUTTER FLOW= 0.535
FOR THE OTHER SIDE
SUM CA= 0.018 INT= 3.50 CFS= 0.063 CO= 0.000 GUTTER FLOW= 0.063
AT THE INLET

SUM CA= 0.171 INT= 3.50 CFS= 0.599 CO= 0.000 GUTTER FLOW= 0.599

GUTTER SLOPE = 0.0001 FT/FT PAVEMENT CROSS SLOPE = 0.0208 FT/FT

SPREAD AT A SLOPE OF .000 (ft./ft.) AND 0.54 (cfs) IS 12.04 (ft.)

XXXXXXXXXX CURB INLET IN A SUMP XXXXXXXXXX
P EFFEC. LENGTH (ft) = 13.60 H (ft) = 0.385
DEPTH OF WATER (ft) = 0.07 SPREAD (ft) = 3.43

---

INLET NUMBER U-2 LENGTH 10.0 STATION 12+30

DRAINAGE AREA = 0.100 ACRES C VALUE = .900 CA = 0.090
DRAINAGE AREA = 0.200 ACRES C VALUE = .300 CA = 0.060
DRAINAGE AREA = 0.130 ACRES C VALUE = .900 CA = 0.117

FOR THE FIRST SIDE
SUM CA= 0.150 INT= 3.50 CFS= 0.525 CO= 0.000 GUTTER FLOW= 0.525
FOR THE OTHER SIDE
SUM CA= 0.117 INT= 3.50 CFS= 0.409 CO= 0.000 GUTTER FLOW= 0.409
AT THE INLET

SUM CA= 0.267 INT= 3.50 CFS= 0.934 CO= 0.000 GUTTER FLOW= 0.934

GUTTER SLOPE = 0.0001 FT/FT PAVEMENT CROSS SLOPE = 0.0208 FT/FT

SPREAD AT A SLOPE OF .000 (ft./ft.) AND 0.53 (cfs) IS 11.94 (ft.)

XXXXXXXXXX CURB INLET IN A SUMP XXXXXXXXXX
P EFFEC. LENGTH (ft) = 13.60 H (ft) = 0.385
DEPTH OF WATER (ft) = 0.10 SPREAD (ft) = 4.62

# PAVEMENT DESIGN CALCULATION

## RIDGE DRIVE EXTENSION

## &

## ROADS "A" & "B"

FILE: Section IV B
LANGLEY and McDONALD, P.C.
201 Packets Court
Williamsburg, Virginia 23185

PAVEMENT DESIGN
VHRC 73-R21
as revised January 1996

PROJECT: Stonehouse Development Area One, Phase One
LOCATION: James City County
STREET: Road A
FROM STA. 10+00 TO ST END
DATE: April 24, 1997

| TRAFFIC ANALYSIS | | SUBGRADE ANALYSIS | | | |
|---|---|---|---|---|---|
| 1. Vehicles Per Day = | 2000 | 1. CBR Values = | 10 | 0 | 0 |
| 2. % Heavy Traffic = | 5 % | | 0 | 0 | 0 |
| 3. Equiv. Present ADT = | 2000 | 2. Enter No. of Tests = | | 1 | |
| 4. Design Period | 20 Yrs. | 3. Average CBR = | 10 | | |
| 5. % Growth = | 0 % | 4. Design CBR = | 6.667 | | |
| 6. Growth Factor = | 1 | 5. Soil Resiliency Factor = | | | 3 |
| 7. V.P.D. Projection = | 2000 ADT | 6. Soil Support Value = | | 20 | |

PAVEMENT DESIGN

1. Thickness Index Required = 15 inches

2. Design

ALT. 'A'

| Material | Factor | Thickness | Index | % Asphalt |
|---|---|---|---|---|
| SM-2A | 1.67 | 0 | 0 | #DIV/0! |
| Aggregate | 0.6 | 0 | 0 | |
| Sel. Material | 0.8 | 0 | 0 | |
| TOTAL | | 0 | 0 | #DIV/0! |

OK

ALT. 'B'

| Material | Factor | Thickness | Index | % Asphalt |
|---|---|---|---|---|
| SM-2A | 2.25 | 1.5 | 3.375 | 0.2216749 |
| BM-2 | 2.15 | 3 | 6.45 | 0.4236453 |
| Aggregate | 0.6 | 9 | 5.4 | |
| Sel. Material | 0.4 | 0 | 0 | |
| TOTAL | | 13.5 | 15.225 | 0.6453202 |

FILE:
LANGLEY and McDONALD, P.C.
201 Packets Court
Williamsburg, Virginia 23185

PAVEMENT DESIGN
VHRC 73-R21
Revised Jan. 1996

PROJECT: StoneHouse L.L.C., Section IV- C
LOCATION: James City County
STREET: Ridge Drive & "cul-de-sac"Road
FROM STA. 29+00 TO STA. 43+00
DATE: 2/20/98

| TRAFFIC ANALYSIS | | SUBGRADE ANALYSIS | | | |
|---|---|---|---|---|---|
| 1. Vehicles Per Day = | 320 | 1. CBR Values = | 10.0 | 0.0 | 0.0 |
| 2. % Heavy Traffic = | 5 % | | | | |
| 3. Equiv. Present ADT = | 320 | 2. Enter No. of Tests = | 1 | | |
| 4. Design Period | 20 Yrs. | 3. Average CBR = | 10.00 | | |
| 5. % Growth = | 0 % | 4. Design CBR = | 6.67 | | |
| 6. Growth Factor = | 1 | 5. Soil Resiliency Factor = | 3 | | |
| 7. V.P.D. Projection = | 320 ADT | 6. Soil Support Value = | 20.00 | | |

PAVEMENT DESIGN

1. Thickness Index Required = 6.4 inches (General Formula)
7.7 inches (Limited formula) (use for ssv<15 &vpd<1000)

2. Design Index Thickness: USE 7.7 inches

ALT. 'A'

| Material | Factor | Thickness | Index | % Asphalt |
|---|---|---|---|---|
| SM-2A | 1.67 | 2 | 3.34 | 35.76% |
| Aggregate | 1 | 6 | 6 | |
| Sel. Material | 0.6 | 0 | 0 | |
| TOTAL | | 8 | 9.34 | |

ALT. 'B'

| Material | Factor | Thickness | Index | % Asphalt |
|---|---|---|---|---|
| SM-2A | 2.25 | 0 | 0 | 0.00% |
| BM-2 | 2.15 | 0 | 0 | 0.00% |
| Aggregate | 0.6 | 0 | 0 | |
| Sel. Material | 0.4 | 0 | 0 | |
| TOTAL | | 0 | 0 | |

ALT. 'C'

| Material | Factor | Thickness | Index | % Asphalt |
|---|---|---|---|---|
| SM-2A | 2.25 | 0 | 0 | 0.00% |
| BM-2 | 2.15 | 0 | 0 | 0.00% |
| CMA | 1.67 | 0 | 0 | |
| Sel. Material | 0.4 | 0 | 0 | |
| TOTAL | | 0 | 0 | |

# DEVELOPMENT MANAGEMENT

101-E MOUNTS BAY ROAD, P.O. BOX 8784, WILLIAMSBURG, VIRGINIA 23187-8784
(757) 253-6671 Fax: (757) 253-6850 E-MAIL: devtman@james-city.va.us

CODE COMPLIANCE
(757) 253-6626
codecomp@james-city.va.us

ENVIRONMENTAL DIVISION
(757) 253-6670
environ@james-city.va.us

PLANNING
(757) 253-6685
planning@james-city.va.us

COUNTY ENGINEER
(757) 253-6678

INTEGRATED PEST MANAGEMENT
(757) 253-2620


December 11, 2001

LandMark Design Group
4029 Ironbound Road
Williamsburg, Va. 23188
Attn: Mr. Peter Farrell

Re: Stonehouse Laurel Ridge Sec 4C Phase 2
Block Wall BMP at Mountain Berry Court
County BMP ID Code: WC 042

Dear Mr. Farrell:

The Environmental Division has reviewed a record drawing and construction certification as submitted to our office on November 16th 2000 for various stormwater management facilities located within Stonehouse. The record drawings and construction certifications provide as-built information for seven (7) extended detention stormwater management/BMP facilities located within the community. For simplicity, you will receive separate correspondence relative to each of the facilities.

Based on our review of information as submitted and a concurrent field observation as performed on August 29th 2001, the following items must be addressed for the basin at **Laurel Ridge Sec 4C, Mountain Berry Court (WC 042)** prior to release of the developer's surety instrument for the stormwater management/BMP facility:

***Construction Certification:***

1. The construction certification dated November 15th 2000 is **satisfactory**.

***Record Drawing:***

2. Add Section A-A as provided on Sheet 9 of the approved plan set to the as-built (record) drawing for the facility. This detail provides important information about riser, barrel and arrangement of block wall construction. Annotate the detail as necessary with field-obtained construction information.

3. Add an address to Lot 5 for information purposes (9917 Mountain Berry Court).

4. Show the following additional information on the record drawing: show riser size; label end wall type and show invert elevation at the upstream end of the 2" low flow orifice; show crest elevation and dimensions for the emergency spillway; and provide spot elevation of existing ground at base of wall near riser.

5. If possible, add the following County identifiers to the lower right hand corner of the record drawing: County Plan No. S-12-98 and BMP ID No. WC 042.

***Construction-Related Items:***

6. Clear and remove trees within 10 feet of the wall structure on both the upstream and downstream faces.

7. Remove trash and wood debris from along top of wall on the north (Mountain Berry Court) side and from along the upstream wall face. There was trash and debris present on the upstream side approximately 30 feet east of the riser and directly around the riser.

8. Remove the felled tree on the upstream side of the basin approximately 50 ft. east of the riser.

9. Clean and remove accumulated sediment, debris and vegetation in the vicinity of the riser and at the upstream end of the low flow orifice. Sediment was measured 2-5 ft. deep at these locations. The low flow orifice for this structure is an 2-inch ductile iron pipe which extends out eastward from the riser to an EW-11 endwall (with No. 1 stone) which serves as a trash rack protection device. Flow into the low flow orifice must not be obstructed. *(Note: At the time of the inspection, the stone filter and endwall was not visible.)*

10. Clear and remove vegetation within 10 feet of the outfall end of the barrel through the dam. Vegetation shall not obstruct flow out of the basin.

11. Repair the subsidence hole present between the downstream face of dam and the outfall end of the 24-inch barrel through the dam. There is a 2 ft. deep hole and saturated conditions were present under the barrel between the wall face and the pipe outfall. ***(Note: Ensure seepage or barrel piping conditions are not present along the 24-inch barrel through the dam).***

12. Clear and remove observed trees and vegetation within and along the east edge of the emergency spillway. Vegetation shall not obstruct flow through the emergency spillway.

13. Clear and remove vegetation within 10 feet of the outfall of the 15-inch storm drain inflow pipe from Mountain Berry Court. Also, remove sediment which was 1-2 feet deep at the outfall end and 6 inches deep in the storm pipe. Sediment and vegetation shall not obstruct inflow into the basin.

14. Stabilize eroded slopes above the outfall end of the 15-inch storm drain from Mountain Berry Court. Runoff from site development areas north of the basin has caused rill and gully erosion at this location.

15. Clear and remove gravel/sediment from the DI-3 inlet structure at the end of Mountain Berry Court (Structure U2 on the approved plan) and from the downstream manhole structure MH-1 (Structure U1).

16. Construct the 10 ft. wide crusher run access and maintenance road, as required per the approved plan.

Once this work is satisfactorily completed, contact our office appropriately for reinspection. One reproducible and one blue/black line set of the record drawings will be required once the above items are adequately addressed. Please contact me at 757-253-6639 or Gerry Lewis, at 757-253-6672 if you have any further comments or questions.

Sincerely,

Scott J. Thomas, P.E.
Civil Engineer
Environmental Division

cc: James H. Bennett (via fax)

G:/SWMProg/Asbuilts/S1298.wc042

# DEVELOPMENT MANAGEMENT

101-E MOUNTS BAY ROAD, P.O. BOX 8784, WILLIAMSBURG, VIRGINIA 23187-8784
(757) 253-6671 Fax: (757) 253-6850 E-MAIL: devtman@james-city.va.us

CODE COMPLIANCE
(757) 253-6626
codecomp@james-city.va.us

ENVIRONMENTAL DIVISION
(757) 253-6670
environ@james-city.va.us

PLANNING
(757) 253-6685
planning@james-city.va.us

COUNTY ENGINEER
(757) 253-6678

INTEGRATED PEST MANAGEMENT
(757) 253-2620


December 11, 2001

LandMark Design Group
4029 Ironbound Road
Williamsburg, Va. 23188
Attn: Mr. Peter Farrell

Reinspect 4-14-03

Reinspect 7-7-03

Re: Stonehouse Laurel Ridge Sec 4C Phase 2 S-12-98
Block Wall BMP at Mountain Berry Court
County BMP ID Code: WC 042

Dear Mr. Farrell:

The Environmental Division has reviewed a record drawing and construction certification as submitted to our office on November 16th 2000 for various stormwater management facilities located within Stonehouse. The record drawings and construction certifications provide as-built information for seven (7) extended detention stormwater management/BMP facilities located within the community. For simplicity, you will receive separate correspondence relative to each of the facilities.

Based on our review of information as submitted and a concurrent field observation as performed on August 29th 2001, the following items must be addressed for the basin at **Laurel Ridge Sec 4C, Mountain Berry Court (WC 042)** prior to release of the developer's surety instrument for the stormwater management/BMP facility:

***Construction Certification:***

1. The construction certification dated November 15th 2000 is **satisfactory**.

***Record Drawing:***

2. ~~Add Section A-A as provided on Sheet 9 of the approved plan set to the as-built (record) drawing for the facility. This detail provides important information about riser, barrel and arrangement of block wall construction. Annotate the detail as necessary with field-obtained construction information.~~

2-24-03 OK

3. Add an address to Lot 5 for information purposes (9917 Mountain Berry Court).

2-24-03 OK

4. Show the following additional information on the record drawing: show riser size; label end wall type and show invert elevation at the upstream end of the 2" low flow orifice; show crest elevation and dimensions for the emergency spillway; and provide spot elevation of existing ground at base of wall near riser.

NOT DONE

5. If possible, add the following County identifiers to the lower right hand corner of the record drawing: County Plan No. S-12-98 and BMP ID No. WC 042.

***Construction-Related Items:***

6. ✓ OK 4-14-03 Clear and remove trees within 10 feet of the wall structure on both the upstream and downstream faces.

7. ✓ OK 4-14-03 Remove trash and wood debris from along top of wall on the north (Mountain Berry Court) side and from along the upstream wall face. There was trash and debris present on the upstream side approximately 30 feet east of the riser and directly around the riser.

8. ✓ OK 4-14-03 Remove the felled tree on the upstream side of the basin approximately 50 ft. east of the riser.

GRATE CLOGGED, 6" water, Remove Big Dead wood pieces.

9. ✓ OK 7-7-03 Clean and remove accumulated sediment, debris and vegetation in the vicinity of the riser and at the upstream end of the low flow orifice. Sediment was measured 2-5 ft. deep at these locations. The low flow orifice for this structure is an 2-inch ductile iron pipe which extends out eastward from the riser to an EW-1 endwall (with No. 1 stone) which serves as a trash rack protection device. Flow into the low flow orifice must not be obstructed. *(Note: At the time of the inspection, the stone filter and endwall was not visible.)*

10. ✓ 4-14-03 OK Clear and remove vegetation within 10 feet of the outfall end of the barrel through the dam. Vegetation shall not obstruct flow out of the basin.

NOT ADDRESSED

11. OK 7-7-03 Repair the subsidence hole present between the downstream face of dam and the outfall end of the 24-inch barrel through the dam. There is a 2 ft. deep hole and saturated conditions were present under the barrel between the wall face and the pipe outfall. ***(Note: Ensure seepage or barrel piping conditions are not present along the 24-inch barrel through the dam).***

12. ✓ 4-14-03 OK Clear and remove observed trees and vegetation within and along the east edge of the emergency spillway. Vegetation shall not obstruct flow through the emergency spillway.

13. ✓ 4-14-03 OK Clear and remove vegetation within 10 feet of the outfall of the 15-inch storm drain inflow pipe from Mountain Berry Court. Also, remove sediment which was 1-2 feet deep at the outfall end and 6 inches deep in the storm pipe. Sediment and vegetation shall not obstruct inflow into the basin.

14. ✓ 4-14-03 Stabilize eroded slopes above the outfall end of the 15-inch storm drain from Mountain Berry Court. Runoff from site development areas north of the basin has caused rill and gully erosion at this location.

15. ✓ 4-14-03 OK Clear and remove gravel/sediment from the DI-3 inlet structure at the end of Mountain Berry Court (Structure U2 on the approved plan) and from the downstream manhole structure MH-1 (Structure U1).

16. ✓ OK 4-14-03 Construct the 10 ft. wide crusher run access and maintenance road, as required per the approved plan.

Once this work is satisfactorily completed, contact our office appropriately for reinspection. One reproducible and one blue/black line set of the record drawings will be required once the above items are adequately addressed. Please contact me at 757-253-6639 or Gerry Lewis, at 757-253-6672 if you have any further comments or questions.

Sincerely,

Scott J. Thomas

Scott J. Thomas, P.E.
Civil Engineer
Environmental Division

cc: James H. Bennett (via fax)

G:/SWMProg/Asbuilts/S1298.wc042

# DEVELOPMENT MANAGEMENT

101-E MOUNTS BAY ROAD, P.O. BOX 8784, WILLIAMSBURG, VIRGINIA 23187-8784
(757) 253-6671 Fax: (757) 253-6850 E-MAIL: devtman@james-city.va.us

CODE COMPLIANCE
(757) 253-6626
codecomp@james-city.va.us

ENVIRONMENTAL DIVISION
(757) 253-6670
environ@james-city.va.us

PLANNING
(757) 253-6685
planning@james-city.va.us

COUNTY ENGINEER
(757) 253-6678

INTEGRATED PEST MANAGEMENT
(757) 253-2620


December 11, 2001

LandMark Design Group
4029 Ironbound Road
Williamsburg, Va. 23188
Attn: Mr. Peter Farrell

Re: Stonehouse Laurel Ridge Sec 4C Phase 2
Block Wall BMP at Mountain Berry Court
County BMP ID Code: WC 042

Dear Mr. Farrell:

The Environmental Division has reviewed a record drawing and construction certification as submitted to our office on November 16th 2000 for various stormwater management facilities located within Stonehouse. The record drawings and construction certifications provide as-built information for seven (7) extended detention stormwater management/BMP facilities located within the community. For simplicity, you will receive separate correspondence relative to each of the facilities.

Based on our review of information as submitted and a concurrent field observation as performed on August 29th 2001, the following items must be addressed for the basin at **Laurel Ridge Sec 4C, Mountain Berry Court (WC 042)** prior to release of the developer's surety instrument for the stormwater management/BMP facility:

***Construction Certification:***

1. The construction certification dated November 15th 2000 is **satisfactory**.

***Record Drawing:***

2. Add Section A-A as provided on Sheet 9 of the approved plan set to the as-built (record) drawing for the facility. This detail provides important information about riser, barrel and arrangement of block wall construction. Annotate the detail as necessary with field-obtained construction information.

3. Add an address to Lot 5 for information purposes (9917 Mountain Berry Court).

4. Show the following additional information on the record drawing: show riser size; label end wall type and show invert elevation at the upstream end of the 2" low flow orifice; show crest elevation and dimensions for the emergency spillway; and provide spot elevation of existing ground at base of wall near riser.

5. If possible, add the following County identifiers to the lower right hand corner of the record drawing: County Plan No. S-12-98 and BMP ID No. WC 042.

***Construction-Related Items:***

6. Clear and remove trees within 10 feet of the wall structure on both the upstream and downstream faces.

7. Remove trash and wood debris from along top of wall on the north (Mountain Berry Court) side and from along the upstream wall face. There was trash and debris present on the upstream side approximately 30 feet east of the riser and directly around the riser.

8. Remove the felled tree on the upstream side of the basin approximately 50 ft. east of the riser.

9. Clean and remove accumulated sediment, debris and vegetation in the vicinity of the riser and at the upstream end of the low flow orifice. Sediment was measured 2-5 ft. deep at these locations. The low flow orifice for this structure is an 2-inch ductile iron pipe which extends out eastward from the riser to an EW-11 endwall (with No. 1 stone) which serves as a trash rack protection device. Flow into the low flow orifice must not be obstructed. *(Note: At the time of the inspection, the stone filter and endwall was not visible.)*

10. Clear and remove vegetation within 10 feet of the outfall end of the barrel through the dam. Vegetation shall not obstruct flow out of the basin.

11. Repair the subsidence hole present between the downstream face of dam and the outfall end of the 24-inch barrel through the dam. There is a 2 ft. deep hole and saturated conditions were present under the barrel between the wall face and the pipe outfall. ***(Note: Ensure seepage or barrel piping conditions are not present along the 24-inch barrel through the dam).***

12. Clear and remove observed trees and vegetation within and along the east edge of the emergency spillway. Vegetation shall not obstruct flow through the emergency spillway.

13. Clear and remove vegetation within 10 feet of the outfall of the 15-inch storm drain inflow pipe from Mountain Berry Court. Also, remove sediment which was 1-2 feet deep at the outfall end and 6 inches deep in the storm pipe. Sediment and vegetation shall not obstruct inflow into the basin.

14. Stabilize eroded slopes above the outfall end of the 15-inch storm drain from Mountain Berry Court. Runoff from site development areas north of the basin has caused rill and gully erosion at this location.

15. Clear and remove gravel/sediment from the DI-3 inlet structure at the end of Mountain Berry Court (Structure U2 on the approved plan) and from the downstream manhole structure MH-1 (Structure U1).

16. Construct the 10 ft. wide crusher run access and maintenance road, as required per the approved plan.

Once this work is satisfactorily completed, contact our office appropriately for reinspection. One reproducible and one blue/black line set of the record drawings will be required once the above items are adequately addressed. Please contact me at 757-253-6639 or Gerry Lewis, at 757-253-6672 if you have any further comments or questions.

Sincerely,

Scott J. Thomas, P.E.
Civil Engineer
Environmental Division

cc: James H. Bennett (via fax)

G:/SWMProg/Asbuilts/S1298.wc042

Larry S. Barry, P.E., President
Norman H. Mason, L.S., Vice Pres.
Vaughn B. Rinner, C.L.A.
Kenneth A. Dierks
Robert P. Kerr, R.E.P., P.W.S.

# LANDMARK DESIGN GROUP

Clayton E. Massey, P.E.
Charles R. Orsborne, L.S.
Stephen A. Romeo, L.S.
Mark W. Strickland, P.E.
A. Gary Webb, P.E.

NOV 2000
RECEIVED
ENVIRONMENTAL DIVISION

November 15, 2000

Mr. Darryl E. Cook
Environmental Director
James City County
P.O. Box 8784
Williamsburg, VA 23187-8784

Re: Stonehouse Development Co., L. L. C.
BMP Basin Construction Certificate
Section IVC, Phase 2, Laurel Ridge
J.C.C. Case No. S-12-98

Dear Darryl:

This is to confirm that periodic inspection was provided by me and persons under my supervision during the progress of construction of the subject storm water management basin. To the best of my knowledge and judgment, the structure has been constructed in accordance with the approved plans and specifications.

Should you have any questions or wish to discuss this further, please call.

Very truly yours,
The LandMark Design Group Inc.

COMMONWEALTH OF VIRGINIA
RICHARD S. PHILLIPS
No. 023631
PROFESSIONAL ENGINEER

Richard S. Phillips, P.E.
Senior Associate

RSP/cjp

Cc: Brandon Forrest
File 1990131-000.46

# James City County Environmental Division
# Stormwater Management / BMP Inspection Report
# Detention and Retention Pond Facilities

Database Inventory No. (if known): WC 042

Name of Facility: Stonehouse Sec 4C Common Area CA16 BMP No.: 1 of 1 Date: 08/29/01

Location: South near 9917 Mountain Berry Court (LOT 5)

Name of Owner: Stonehouse Limited Liability

Inspector: SJ Thomas, JJ Buchite

Type of Facility: Dry Det Basin, Block WALL DAM

Weather Conditions: P. Sunny, 70's

**If an inspection item is not applicable, mark NA, otherwise mark the appropriate column.**

**O.K. - The item checked is in adequate condition and the maintenance program is currently satisfactory.**
**Routine - The item checked requires attention, but does not present an immediate threat to the function of the BMP.**
**Urgent - The item checked requires immediate attention to keep the BMP operational and prevent damage to the facility.**

**Provide an explanation and details in the comment column, if routine or urgent are marked.**

| Facility Item | O.K. | Routine | Urgent | Comments |
|---|---|---|---|---|
| **Embankments and Side Slopes:** 15' wide Top; GRASS TOP No Cover; 10-12' HIGH VERT. WALL; GEOGRID | | | | |
| Grass Height | ✓ | | | Top 1-2"; NONE ON SIDE WALLS |
| Vegetation Condition | ✓ | ✓ | | None. Top Remove Trees 15' From US/DS. |
| Tree Growth | ✓ | | | None. |
| Erosion | ✓ | | | None. Vert WALL |
| Trash & Debris | ✓ | ✓ | | Top of WALL North End WOOD Debris. |
| Seepage | ✓ | | | |
| ~~Fencing or Benches~~ other: | | | | WALL APPEARS PLUMB; NOT SIGNS OF SETTLING OR DISPLACED SECTIONS |
| **Interior Landscaping/Planted Areas:** ☐ None ☐ Constructed Wetland/Shallow Marsh ☑ Naturally Established Vegetation | | | | |
| Vegetated Conditions | ✓ | | | Weeds, grasses + trees |
| Trash & Debris | | ✓ | | Trash + Wood debris north U/S side |
| Floating Material | | ✓ | | OF WALL. FELLED Tree AND Plywood. |
| Erosion | ✓ | | | |
| Sediment | | ✓ | ✓ | Sed 2-5' deep at riser |
| Dead Plant | ✓ | | | |
| Aesthetics | | | | Natural Look |
| Other | | | | |
| Serves SF Lots + Road Mountain Berry Court | | | | |

| Facility Item | O.K. | Routine | Urgent | Comments |
|---|---|---|---|---|
| **Water Pools** ☐ Permanent Pool (Retention Basin) ☐ Shallow Marsh (Detention Basin) ☑ None (Detention Basin) | | | | |
| Shoreline Erosion | ✓ | | | Dry Pond, no SL erosion |
| Algae | ✓ | | | None. |
| Trash & Debris | | ✓ | ✓ | As Noted. |
| Sediment | | ✓ | ✓ | 2.5' deep @ riser + Low Flow ORIF. |
| Aesthetics | ✓ | | | Generally OK. |
| Other | | | | |
| **Inflow Stuctures (Describe Locations):** 15" RCP from north shoreline. Along Lot 5. | | | | |
| Condition of Structure | ✓ | | | |
| Erosion | | ✓ | ✓ | Interior sideslope erosion above pipe. |
| Trash and Debris | ✓ | | | |
| Sediment | | ✓ | | Sed 1-2' deep at pipe inflow. CLEAN INFLOW SD |
| Aesthetics | | ✓ | | Unsightly sed. discharge. |
| Other | | | | |
| **Principal Flow Control Structure - Intake, Riser, etc. (Describe Location):** 36" RCP w/ 8' CAP. MH LID. 10-12' Deep. | | | | |
| Condition of Structure | ✓ | | | Plain conc. w/ rect slots/steps. |
| Corrosion | ✓ | | | |
| Trash and Debris | ✓ | | | |
| Sediment | ✓ | | | |
| Aesthetics | ✓ | | | |
| Other | ✓ | | | 2" steel low flow orif (dry); 8/12" PVC Dw |
| **Principal Outlet Structure - Barrel, Conduit, etc. :** 24" RCP w/ END SECT ASTM C-478. OP intact | | | | |
| Condition of Structure | ✓ | | | |
| Settlement | ✓ | | | |
| Trash & Debris | ✓ | ✓ | | Clear veg 10' from barrel out. |
| Sediment | | | | |
| Erosion | | ✓ | ✓ | 2' deep hole under 24" BARREL FROM WALL 3' TO END SECT. SATURATED. |
| Other | | | | |
| **Emergency Spillway (Overflow):** 8' wide trapez; Class I Riprap | | | | |
| Vegetation | ✓ | ✓ | ✓ | Trees along EAST EDGE |
| Lining | ✓ | | | Riprap |
| Erosion | ✓ | | | |
| Trash & Debris | ✓ | | | |
| Other | | | | |
| Possible seepage thru or under wall at barrel | | | | |

| Facility Item | O.K. | Routine | Urgent | Comments |
|---|---|---|---|---|
| **Nuisance Type Conditions:** | | | | |
| Mosquito Breeding | | ✓ | | Mosquitos noticable, above normal |
| Animal Burrows | ✓ | | | Possible Groundhog hole o/s North end. |
| Graffiti | ✓ | | | |
| Other | | | | |
| **Surrounding Perimeter Conditions:** | North Lot 5 SF, south Golf Course, East wooded/SF, West woods | | | |
| Land Uses | | ✓ | | SF Const on Lot 5 (9817). SF |
| Vegetation | ✓ | | | Down. seep into basin. |
| Trash & Debris | ✓ | ✓ | | wood debris |
| Aesthetics | ✓ | | | |
| Access /Maintenance Roads or Paths | ✓ | | | From Mountain Berry Ct between Lot 5 (9817) and Lot 4 |
| Other | | | | |

**Remarks:**

▷ Remove Trees + Veg 15' from along u/s and d/s toe of wall. Especially on o/s south side.

▷ Remove trash + wood debris north u/s side of wall ~ 30' from riser. Remove felled tree on u/s side of basin ≈ 50' east of riser. Remove plywood at riser. Remove wood debris from North Top of wall.

▷ clean & remove sed 2-5' deep in vicinity of riser. Total block & obstructing low flow orifice.

A clear veg 10' from pipe barrel outfall.

▷ Undermine + seep area from wall to barrel end section. 2' deep under pipe + saturated. Possible wall or barrel seepage

▷ Mosq. Above Average.

▷ CLEAN SED 1-2' deep at pipe inflow 15' into facility. Correct ~~slope~~ erosion on slope above pipe. CLEAR veg 15' of pipe. 6" deep in pipe. (SED + BARREL UNDERMINE)

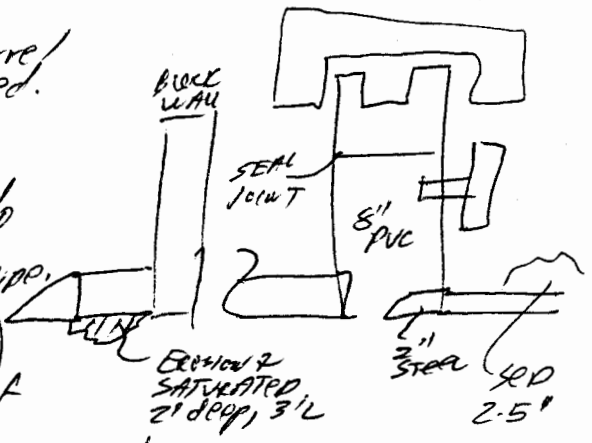


Overall Environmental Division Internal Rating: 2

▷ CLEAN 2 ACCESS STRUCTURES MH-1 AND DROP INLET AT Berry Ct cul-de-sac of GRAVEL AND SEDIMENT.

Signature: [signature] P.E.

Date: 08/29/01 11:15 Am

Title: CIVIL ENGINEER ENV DIV

SWMProg\BMP\CoInspProg\DetRet.wpd

SF Active
Contractor: Caney Creek
Loc: 9917 Mountain Berry Ct (Lot 5)
Permit #: 01-1527

GPIN 0510700001A ~~WC042~~
Stonehouse Limited
C/o
P.O Box 759
TUANU 23168

BLOCK
WALL

WC042

LOCATION: South NEAR
9917 Mountain
Berry Ct.
Lot 5

| | | | | | |
|---|---|---|---|---|---|
| WATERSHED | WC | MAINTENANCE PLAN | No | CTRL STRUC DESC | RCP Riser |
| BMP ID NO | 042 | SITE AREA acre | 27.34 | CTRL STRUC SIZE inches | 48 |
| PLAN NO | S-12-98 | LAND USE | Res Planned Unit D | OTLT BARRL DESC | RCP Barrel |
| TAX PARCEL | (05-01)(07-1A) | old BMP TYP | Dry Pond | OTLT BARRL SIZE inch | 24 |
| PIN NO | 0510700001A | JCC BMP CODE | | | |
| CONSTRUCTION DATE | 11/16/2000 | POINT VALUE | 4 | EMERG SPILLWAY | Yes |
| PROJECT NAME | Stonehouse Sec 4C Ph 2 Laurel Ridge | | | DESIGN HW ELEV | 76.62 |
| FACILITY LOCATION | Behind (south) 9917 Mountain Berry Ct. | | | PERM POOL ELE | na |
| CITY-STATE | Williamsburg, Va. 23011 | SVC DRAIN AREA acres | 11.32 | 2-YR OUTFLOW cfs | 4.33 |
| CURRENT OWNER | Stonehouse Limited Liability | | | 10-YR OUTFLOW cfs | 12.11 |
| OWNER ADDRESS | P.O. Box 759 | | | REC DRAWING | Yes |
| OWNER ADDRESS 2 | | SERVICE AREA DESCRI | SF Lots and Roadways | | |
| CITY-STATE-ZIP CODE | Toano, Va. 23168 | IMPERV AREA acres | 3.28 | CONSTR CERTI | Yes |
| OWNER PHONE | | RECV STREAM | UT of Bird Swamp | | |
| MAINT AGREEMENT | Yes | EXT DET-WQ-CTRL | Yes | LAST INSP DATE | 8/29/2001 |
| EMERG ACTION PLAN | No | WTR QUAL VOL acre-ft | 0.3 | INTERNAL RATING | 2 |
| | | CHAN PROT CTRL | No | MISC/COMMENTS | |
| | | CHAN PROT VOL acre-ft | 0 | Block Wall Dam. Common Area CA16. 24 hr det 1" rainfall. | |
| | | SW/FLOOD CONTROL | Yes | | |
| | | GEOTECH REPORT | No | | |

Get Last BMP No

Return to Menu

ENVIRONMENTAL DIVISION REVIEW COMMENTS
STONEHOUSE SECTION 4-C, PHASE 1
PLAN NO. S-12-98 PTM/DEC
April 7, 1998

1. A Land Disturbing Permit and Siltation Agreement, with surety, are required for this project.

2. A Subdivision Agreement, with surety, shall be executed with the County prior to recordation of lots.

3. Water and sewer inspection fees must be paid prior to the issuance of a Land Disturbing Permit.

4. An Inspection/Maintenance Agreement shall be executed with the county for the BMP facility for this project.

5. As-built drawings must be provided for the detention basin on completion. Also, a note shall be provided on the plan stating that upon completion, the construction of the dam will be certified by a professional engineer who has inspected the structure during construction.

6. Provide a streetlight plan that meets James City County's Streetlight requirements.

7. The following comments pertain to System U:
   A. Provide and label the limits of clearing for the storm pipe outfall shown on plan sheet #7.
   B. Show the full extent of System U complete with riprap outfall protection on sheet #9.
   C. Perform the hydraulic grade calculation using a tailwater elevation of 75.2 which is the elevation of the 10-year storm in the attenuation basin. The starting elevation of 68.43 ignores this significant tailwater condition.

8. Provide a sediment trap for the System U drainage by temporarily ending the system between U-1 and U-2 as shown on plan sheet #7. The sediment trap may be located at the end of the pipe shown at elevation 84.00. Design the trap in accordance with VESCH and provide a detail and calculations for the design.

9. Sediment traps #1 and 2 will not properly capture all of the runoff, and they will release flows down a fill slope prior to the installation of the storm system.

   A solution to this problem is to install a sediment trap below the fill slope shown on plan sheet #5, Sta.37+00. This sediment trap should be constructed of riprap and #1 stone and shaped in a quarter circle starting 10' below the proposed clearing at about contour line 78.00 and extend across contour 72.00 and tie back into contour line 78.00. To avoid excavating for a wet storage area, a filter cloth material can be placed within the stone to elevation 74.00 to create a ponding of sediment laden water. If this is provided, sediment traps #1 and 2 may be deleted and replaced with substantial culvert inlet protection (CIP) placed around DI #S-7 once it is installed.