# CERTIFICATE OF AUTHENTICITY

**THIS IS TO CERTIFY THAT THE FOLLOWING ELECTRONIC RECORDS ARE TRUE AND ACCURATE REPRODUCTIONS OF THE ORIGINAL RECORDS OF JAMES CITY COUNTY GENERAL SERVICES DEPARTMENT- STORMWATER DIVISION; WERE SCANNED IN THE REGULAR COURSE OF BUSINESS PURSUANT TO GUIDELINES ESTABLISHED BY THE LIBRARY OF VIRGINIA AND ARCHIVES; AND HAVE BEEN VERIFIED IN THE CUSTODY OF THE INDIVIDUAL LISTED BELOW.**

**BMP NUMBER:** **WC050**

**DATE VERIFIED:** **September 17, 2012**

**QUALITY ASSURANCE TECHNICIAN:** **Leah Hardenbergh**

Leah Hardenbergh

**LOCATION: WILLIAMSBURG, VIRGINIA**

# Stormwater Division

## MEMORANDUM

**DATE:** March 12, 2010

**TO:** Michael J. Gillis, Virginia Correctional Enterprises Document Management Services

**FROM:** Tina Cantwell, Stormwater

**PO:** 270712

**RE:** Files Approved for Scanning

---

**General File ID or BMP ID:** ~~WC049~~---WC050

**PIN:** 0530100005

**Subdivision, Tract, Business or Owner Name** (if known): Tradition Golf Club (The) at Stonehouse

**Property Description:** BMP #3 Maintenance Center & Golf Course Hole # 10

**Site Address:** 9755 Mill Pond Road

*(For Internal use only)* **Box** 13 **Drawer:** 9

**Agreements:** (in file as of scan date) Y **Book or Doc#:** 420 **Page:** 712

Comments

BOOK 0712 PAGE 0663

DECLARATION OF COVENANTS

017615

INSPECTION/MAINTENANCE OF RUNOFF CONTROL FACILITY

COPY

THIS DECLARATION, made this 17th day of October, 19 94, between Legends of Virginia, LC, and all successors in interest, hereinafter referred to as the "COVENANTOR(S)," owner(s) of the following property: Legends at Stonehouse Golf Course 245 Ac FROM 4699.33 Ac STONEHOUSE DEED BOOK NUMBER 420 PAGE 712, and James City County, Virginia, hereinafter referred to as the "COUNTY."

WITNESSETH:

We, the COVENANTOR(S), with full authority to execute deeds, mortgages, other covenants, and all rights, titles and interests in the property described above, do hereby covenant with the COUNTY as follows:

1. The COVENANTOR(S) shall provide maintenance for the runoff control facility, hereinafter referred to as the "FACILITY," located on and serving the above-described property to ensure that the FACILITY is and remains in proper working condition in accordance with approved design standards, and with the law and applicable executive regulations.

2. If necessary, the COVENANTOR(S) shall levy regular or special assessments against all present or subsequent owners of property served by the FACILITY to ensure that the FACILITY is properly maintained.

3. The COVENANTOR(S) shall provide and maintain perpetual access from public right-of-ways to the FACILITY for the COUNTY, its agent and its contractor.

4. The COVENANTOR(S) shall grant the COUNTY, its agent and its contractor a right of entry to the FACILITY for the purpose of inspecting, operating, installing, constructing, reconstructing, maintaining or repairing the FACILITY.

5. If, after reasonable notice by the COUNTY, the COVENANTOR(S) shall fail to maintain the FACILITY in accordance with the approved design standards and with the law and applicable executive regulations, the COUNTY may perform all necessary repair or maintenance work, and the COUNTY may assess the COVENANTOR(S) and/or all property served by the FACILITY for the cost of the work and any applicable penalties.

6. The COVENANTOR(S) shall indemnify and save the COUNTY harmless from any and all claims for damages to persons or property arising from the installation, construction, maintenance, repair, operation or use of the FACILITY.

7. The COVENANTOR(s) shall promptly notify the COUNTY when the COVENANTOR(S) legally transfers any of the COVENANTOR(S)' responsibilities for the FACILITY. The COVENANTOR(S)' shall supply the COUNTY with a copy of any document of transfer, executed by both parties.

8. The covenants contained herein shall run with the land and shall bind the COVENANTOR(S) and the COVENANTOR(S)' heirs, executors, administrators, successors and assignees, and shall bind all present and subsequent owners of property served by the FACILITY.

9. This DECLARATION shall be recorded in the County Land Records.

# JAMES CITY COUNTY
# EROSION AND SEDIMENT CONTROL NOTES

THE PURPOSE OF THE EROSION CONTROL MEASURES SHOWN ON THESE PLANS SHALL BE TO PRECLUDE THE TRANSPORT OF ALL WATERBORNE SEDIMENTS RESULTING FROM CONSTRUCTION ACTIVITIES FROM ENTERING ONTO ADJACENT PROPERTIES OF STATE WATERS. IF FIELD INSPECTION REVEALS THE INADEQUACY OF THE PLAN TO CONFINE SEDIMENT TO THE PROJECT SITE. APPROPRIATE MODIFICATIONS WILL BE MADE TO CORRECT ANY PLAN DEFICIENCIES. IN ADDITION TO THESE NOTES, ALL PROVISIONS OF THE VIRGINIA EROSION AND SEDIMENT CONTROL REGULATIONS SHALL APPLY TO THIS PROJECT.

1. ALL EROSION AND SEDIMENT CONTROL MEASURES SHALL BE INSTALLED AND MAINTAINED IN ACCORDANCE WITH THE VIRGINIA EROSION AND SEDIMENT CONTROL HANDBOOK . THE CONTRACTOR SHALL BE THOROUGHLY FAMILIAR WITH ALL APPLICABLE MEASURES CONTAINED THEREIN WHICH MAY BE PERTINENT TO THIS PROJECT.

2. ALL POINTS OF CONSTRUCTION INGRESS AND EGRESS SHALL BE PROTECTED BY A TEMPORARY CONSTRUCTION ENTRANCE TO PREVENT TRACKING OF MUD ONTO PUBLIC RIGHT-OF-WAYS. AN ENTRANCE PERMIT FROM VDOT IS REQURED PRIOR TO ANY CONSTRUCTION ACTIVITIES WITHIN STATE RIGHT-OF-WAYS. WHERE SEDIMENT IS TRANSPORTED ONTO A PUBLIC ROAD SURFACE, THE ROAD SHALL BE THOROUGHLY CLEANED AT THE END OF EACH DAY.

3. A PRECONSTRUCTION MEETING SHALL BE HELD ON SITE BETWEEN THE COUNTY, THE DEVELOPER, THE PROJECT ENGINEER, AND THE CONTRACTOR PRIOR TO ISSUANCE OF THE LAND DISTURBING PERMIT. THE CONTRACTOR SHALL SUBMIT A SEQUENCE OF CONSTRUCTION TO THE COUNTY FOR APPROVAL PRIOR TO THE PRECONSTRUCTION MEETING. THE CONTRACTOR WILL SUPPLY CODE COMPLIANCE WITH THE NAME OF THE INDIVIDUAL WHO WILL BE RESPONSIBLE FOR ENSURING MAINTENANCE OF INSTALLED MEASURES ON A DAILY BASIS.

4. SEDIMENT BASINS AND TRAPS, PERIMETER DIKES, SEDIMENT BARRIERS AND OTHER MEASURES INTENDED TO TRAP SEDIMENT ON-SITE MUST BE CONSTRUCTED AS A FIRST STEP IN GRADING AND BE MADE FUNCTIONAL BEFORE UPSLOPE LAND DISTURBANCE TAKES PLACE. EARTHEN STRUCTURES SUCH AS DAMS, DIKES, AND DIVERSIONS MUST BE SEEDED AND MULCHED IMMEDIATELY AFTER INSTALLATION. PERIODIC INSPECTIONS OF THE EROSION CONTROL MEASURES SHALL BE MADE TO ASSESS THEIR CONDITION. ANY NECESSARY MAINTENANCE OF THE MEASURES SHALL BE ACCOMPLISHED IMMEDIATELY UPON NOTIFICATION BY THE COUNTY AND SHALL INCLUDE THE REPAIR OF MEASURES DAMAGED BY ANY SUBCONTRACTOR INCLUDING THOSE OF THE PUBLIC UTILITY COMPANIES.

5. SURFACE FLOWS OVER CUT AND FILL SLOPES SHALL BE CONTROLLED BY EITHER REDIRECTING FLOWS FROM TRANSVERSING THE SLOPES OF BY INSTALLING MECHANICAL DEVICES TO SAFELY LOWER WATER DOWNSLOPE WITHOUT CAUSING EROSION. A TEMPORARY FILL DIVERSION (STD. + SPEC. 3.10) SHALL BE INSTALLED PRIOR TO THE END OF EACH WORKING DAY.

6. SEDIMENT CONTROL MEASURES MAY REQUIRE MINOR FIELD ADJUSTMENTS AT TIME OF CONSTRUCTION TO INSURE THEIR INTENDED PURPOSE IS ACCOMPLISHED. DIVISION OF CODE COMPLIANCE APPROVAL WILL BE REQUIRED FOR OTHER DEVIATIONS FROM THE APPROVED PLANS.

7. THE CONTRACTOR SHALL PLACE SOIL STOCKPILES AT THE LOCATIONS SHOWN ON THIS PLAN OR AS DIRECTED BY THE ENGINEER. SOIL STOCKPILES SHALL BE STABILIZED OR PROTECTED WITH SEDIMENT TRAPPING MEASURES. OFF-SITE WASTE OR BORROW AREAS SHALL BE APPROVED BY THE DIVISION OF CODE COMPLIANCE PRIOR TO THE IMPORT OF ANY BORROW OR EXPORT OF ANY WASTE TO OR FROM THE PROJECT SITE.

8. THE CONTRACTOR SHALL COMPLETE DRAINAGE FACILITIES WITHIN 30 DAYS FOLLOWING COMPLETION OF ROUGH GRADING AT ANY POINT WITHIN THE PROJECT. THE INSTALLATION OF DRAINAGE FACILITIES SHALL TAKE PRECEDENCE OVER ALL UNDERGROUND UTILITIES. OUTFALL DITCHES FROM DRAINAGE STRUCTURES SHALL BE STABILIZED IMMEDIATELY AFTER CONSTRUCTION OF SAME. THIS INCLUDES INSTALLATION OF EROSION CONTROL STONE OR PAVED DITCHES WHERE REQUIRED. ANY DRAINAGE OUTFALLS REQUIRED FOR A STREET MUST BE COMPLETED BEFORE STREET GRADING OR UTILITY INSTALLATION BEGINS.

9. PERMANENT OR TEMPORARY SOIL STABILIZATION MUST BE APPLIED TO ALL DENUDED AREAS WITHIN 7 DAYS AFTER FINAL GRADE IS REACHED ON ANY PORTION OF THE SITE. SOIL STABILIZATION MUST ALSO BE APPLIED TO DENUDED AREAS WHICH MAY NOT BE AT FINAL GRADE BUT WILL REMAIN DORMANT (UNDISTURBED) FOR LONGER THAN 30 DAYS. SOIL STABILIZATION MEASURES INCLUDE VEGETATIVE ESTABLISHMENT, MULCHING AND THE EARLY APPLICATION OF GRAVEL BASE MATERIAL ON AREAS TO BE PAVED.

10. NO MORE THAN 300 FEET OF SANITARY STORM SEWER, WATERLINES, OR UNDERGROUND UTILITY LINES ARE TO BE OPEN AT ONE TIME. FOLLOWING INSTALLATION OF ANY PORTION OF THESE ITEMS, ALL DISTURBED AREAS ARE TO BE IMMEDIATELY STABILIZED (I.E., THE SAME DAY).

11. IF DISTURBED AREA STABILIZATION IS TO BE ACCOMPLISHED DURING THE MONTHS OF DECEMBER, JANUARY, OR FEBRUARY, STABILIZATION SHALL CONSIST OF MULCHING IN ACCORDANCE WITH SPECIFICATION 3.35. SEEDING WILL THEN TAKE PLACE AS SOON AS THE SEASON PERMITS.

12. THE TERM SEEDING, FINAL VEGETATIVE COVER OR STABILIZATION, ON THIS PLAN SHALL MEAN THE SUCCESSFUL GERMINATION AND ESTABLISHMENT OF A STABLE GRASS COVER FROM A PROPERLY PREPARED SEEDBED CONTAINING THE SPECIFIED AMOUNTS OF SEED, LIME, AND FERTILIZING IN ACCORDANCE WITH SPECIFICATION 3.32, PERMANENT SEEDING. IRRIGATION SHALL BE REQUIRED AS NECESSARY TO ENSURE ESTABLISHMENT OF GRASS COVER.

13. ALL SLOPES STEEPER THAN 3:1 SHALL REQUIRE THE USE OF EROSION CONTROL BLANKETS SUCH AS EXCELSIOR BLANKETS TO AID IN THE ESTABLISHMENT OF A VEGETATIVE COVER. INSTALLATION SHALL BE IN ACCORDANCE WITH SPECIFICATION 3.35, MULCHING AND MANUFACTURER S INSTRUCTIONS. NO SLOPES SHALL BE CREATED STEEPER THAN 2:1.

14. INLET PROTECTION IN ACCORDANCE WITH SPECIFICATION 3.07 SHALL BE PROVIDED FOR ALL STORM DRAIN INLETS AS SOON AS PRACTICAL FOLLOWING CONSTRUCTION OF SAME.

15. TEMPORARY LINERS, SUCH AS POLYETHYLENE SHEETS, SHALL BE PROVIDED FOR ALL PAVED DITCHES UNTIL THE PERMANENT CONCRETE LINER IS INSTALLED.

16. PAVED DITCHES SHALL BE REQUIRED WHEREVER EROSION IS EVIDENT. PARTICULAR ATTENTION SHALL BE PAID TO THOSE AREAS WHERE GRADES EXCEED 3 PERCENT.

17. TEMPORARY EROSION CONTROL MEASURES ARE NOT TO BE REMOVED UNTIL ALL DISTURBED AREAS ARE STABILIZED. AFTER STABILIZATION IS COMPLETE, ALL MEASURES SHALL BE REMOVED WITHIN 30 DAYS. TRAPPED SEDIMENT SHALL BE SPREAD AND SEEDED.

18. AS-BUILT DRAWINGS MUST BE PROVIDED FOR ALL DETENTION/BMP FACILITIES. ALSO UPON COMPLETION, THE CONSTRUCTION OF ALL DETENTION/BMP FACILITIES SHALL BE CERTIFIED BY A PROFESSIONAL ENGINEER WHO INSPECTED THE STRUCTURE DURING CONSTRUCTION. THE CERTIFICATION SHALL STATE THAT TO THE BEST OF HIS/HER JUDGMENT, KNOWLEDGE, AND BELIEF, THE STRUCTURE WAS CONSTRUCTED IN ACCORDANCE WITH THE APPROVAL PLANS AND SPECIFICATIONS.

19. A LAND DISTURBING PERMIT AND SILTATION AGREEMENT, WITH SURETY ARE REQUIRED FOR THIS PROJECT.

20. AS-BUILT DRAWINGS SHALL BE PROVIDED FOR ALL DETENTION BASINS UPON COMPLETION.

## CONCRETE EQUIPMENT WASH PAD DETAILS

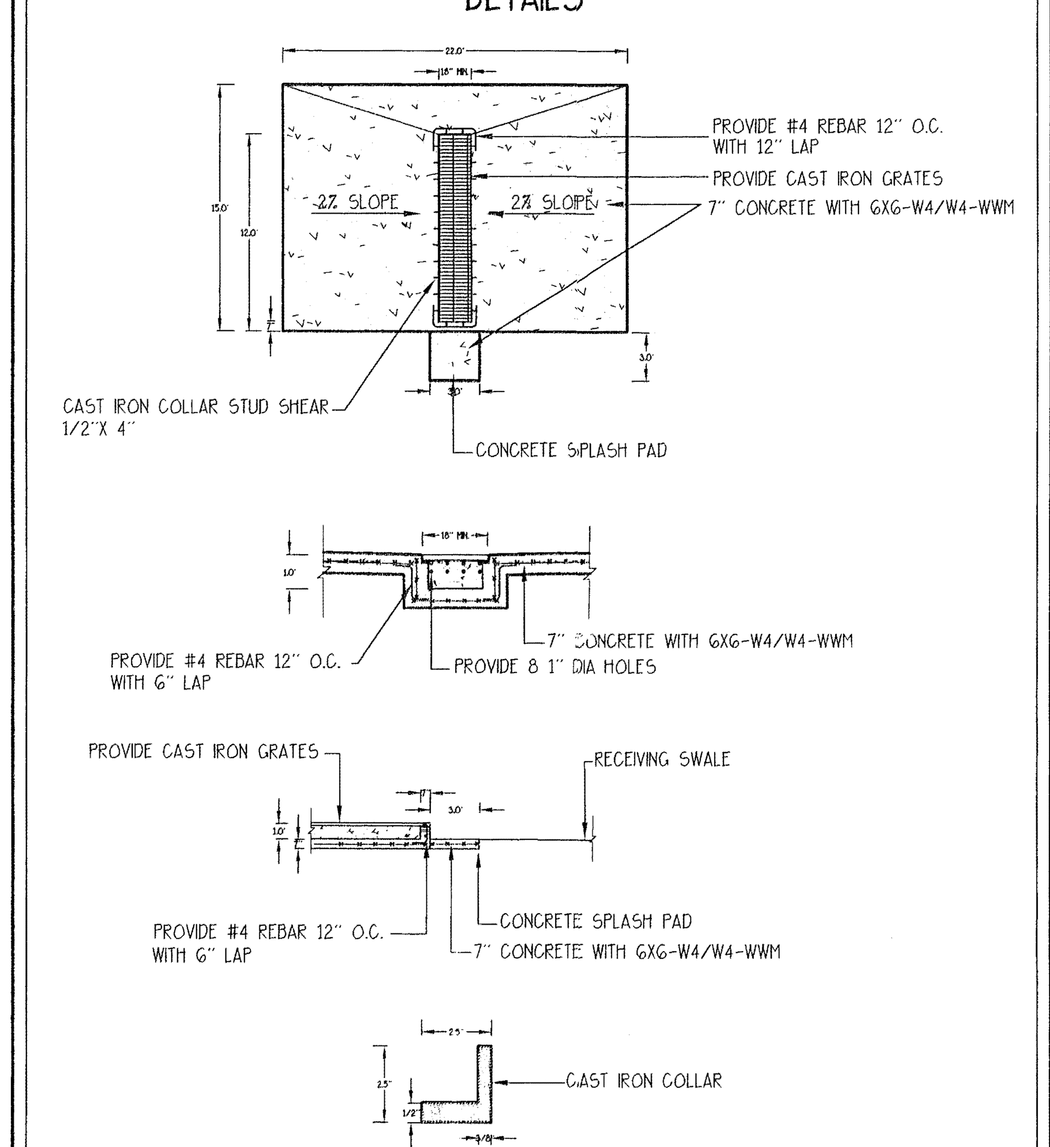


## STANDARD DROP INLET

12"-24" PIPE MAXIMUM DEPTH (H)=10'

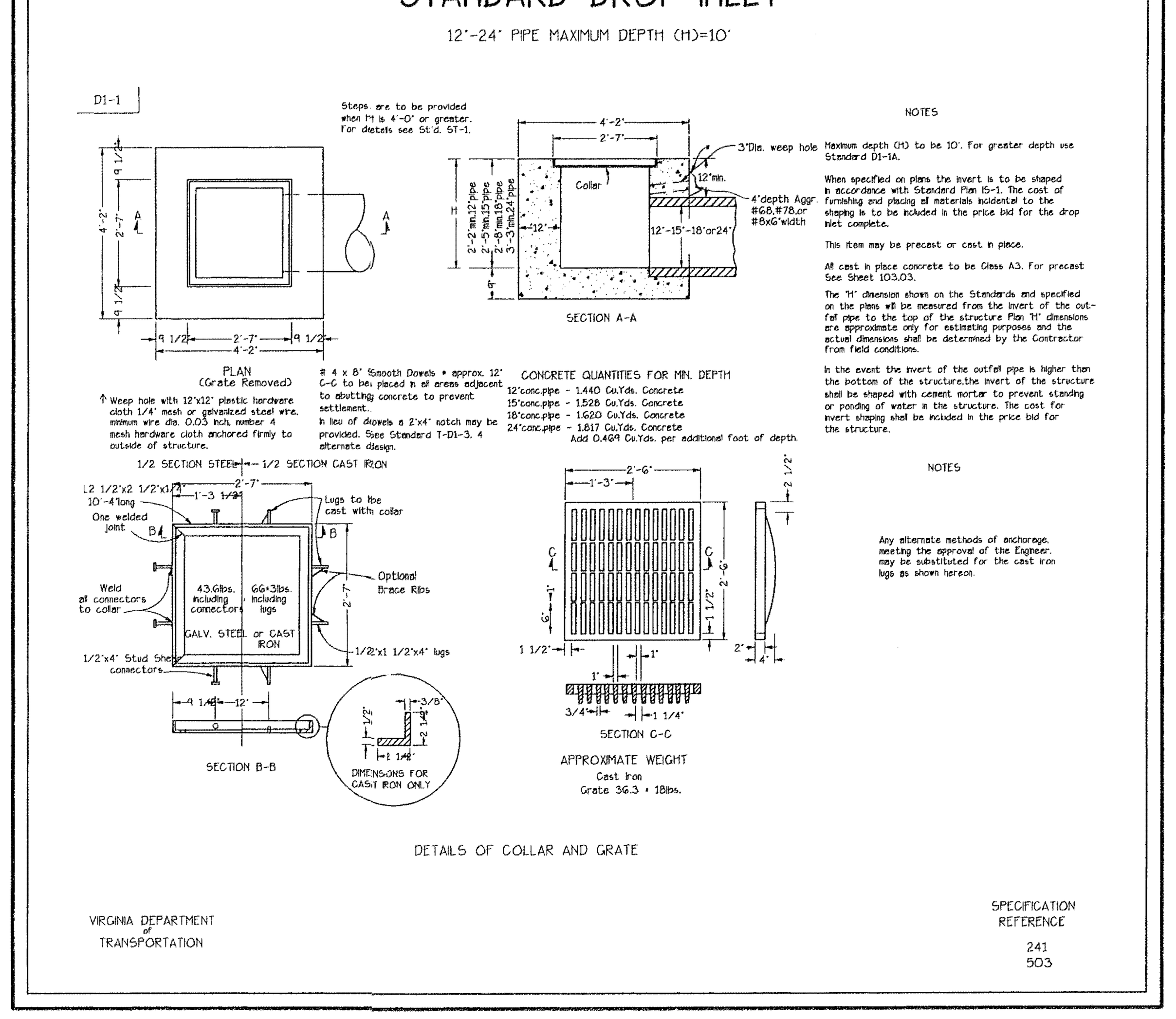


## HANDICAP PARKING SIGN

NOTE
Provide (1) 12"x18" sign @ each handicapped parking space indicated on the site plan. Sign will be Aluminum (painted blue) w/white letters & international wheelchair symbol on 4' high, 1.5" dia. steel post, painted black and set into 12" of concrete.
Typ. handicapped parking space to be 12.5' (w). See site plan for location.

## SILT FENCE

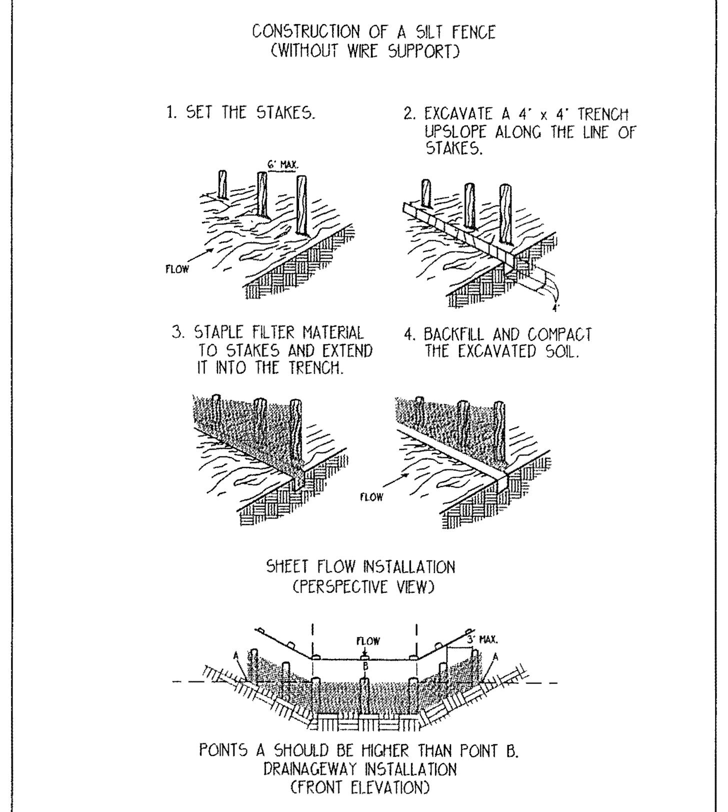


## STORM DRAIN INLET PROTECTION

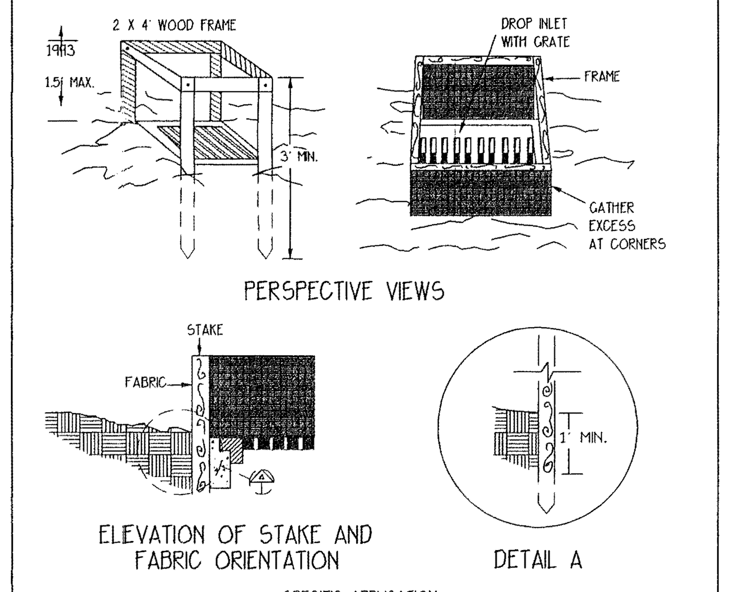


SPECIFIC APPLICATION

THIS METHOD OF INLET PROTECTION IS APPLICABLE WHERE THE INLET DRAINS A RELATIVELY FLAT AREA (SLOPE NO GREATER THAN 5%) WHERE THE INLET SHEET OR OVERLAND FLOWS (NOT EXCEEDING 1 C.F.S.) ARE TYPICAL. THE METHOD SHALL NOT APPLY TO INLETS RECEIVING CONCENTRATED FLOWS, SUCH AS IN STREET OR HIGHWAY MEDIANS.

Source: N.C. Erosion and Sediment Control Planning and Design Manual, 1988

## GR-2 DETAIL

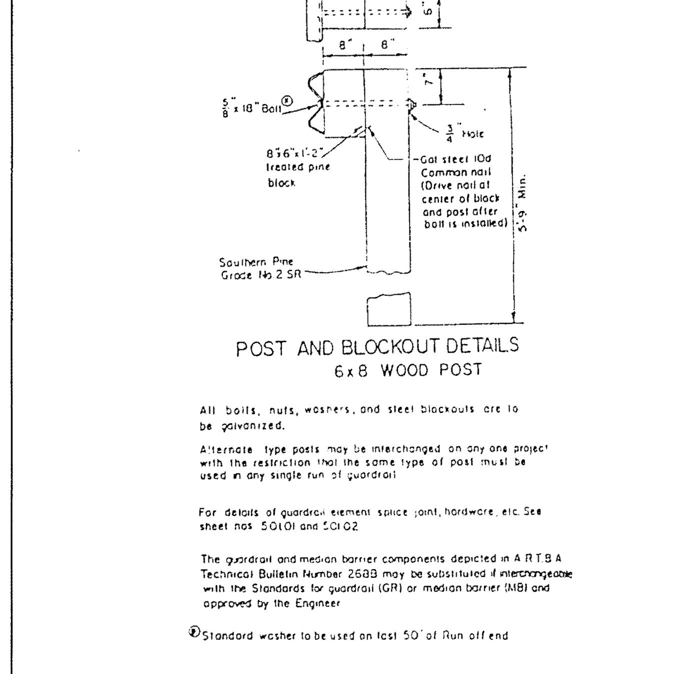


STANDARD BLOCKED-OUT W BEAM GUARDRAIL (STRONG POST SYSTEM)

## TYPICAL PAVEMENT SECTION

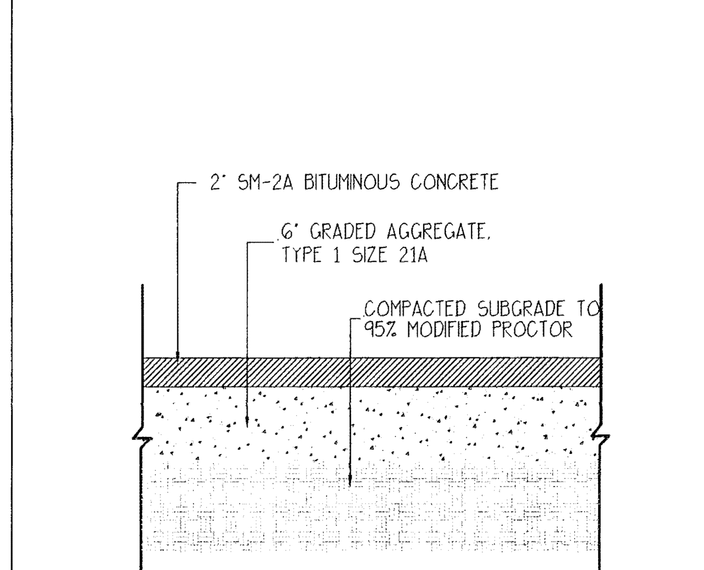


## BULK STORAGE, WASH RACK AND BUILDING APRON SLAB DETAIL

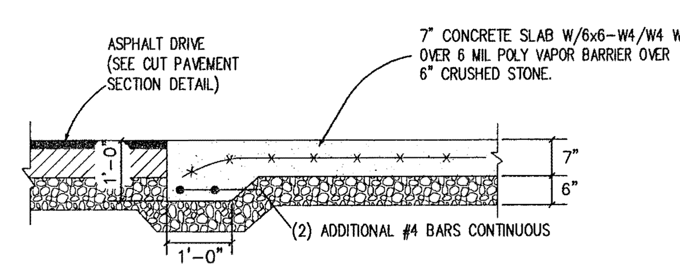


BULK STORAGE, WASH RACK AND BUILDING APRON SLAB DETAIL
1/2" = 1'-0"

## BMP SECTION

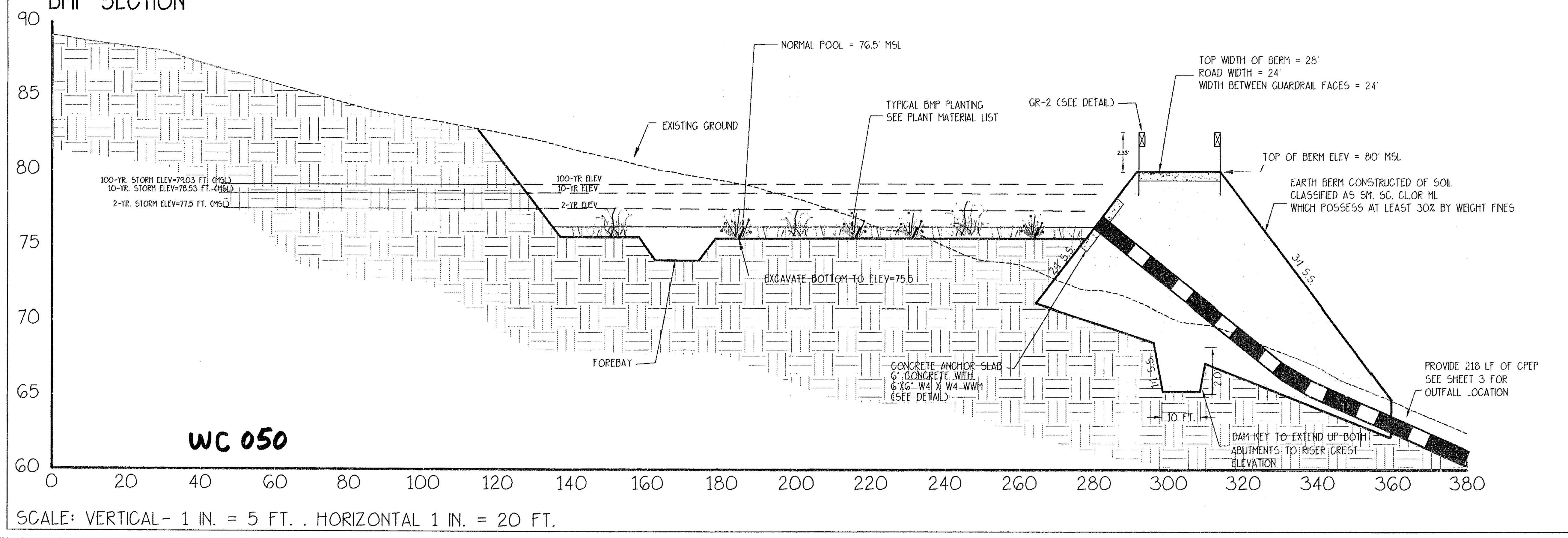


SCALE: VERTICAL- 1 IN. = 5 FT. , HORIZONTAL 1 IN. = 20 FT.

## CONCRETE ANCHOR SLAB DETAIL

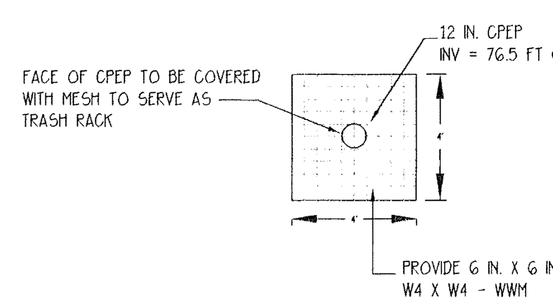


## TYPICAL ASPHALT CURB

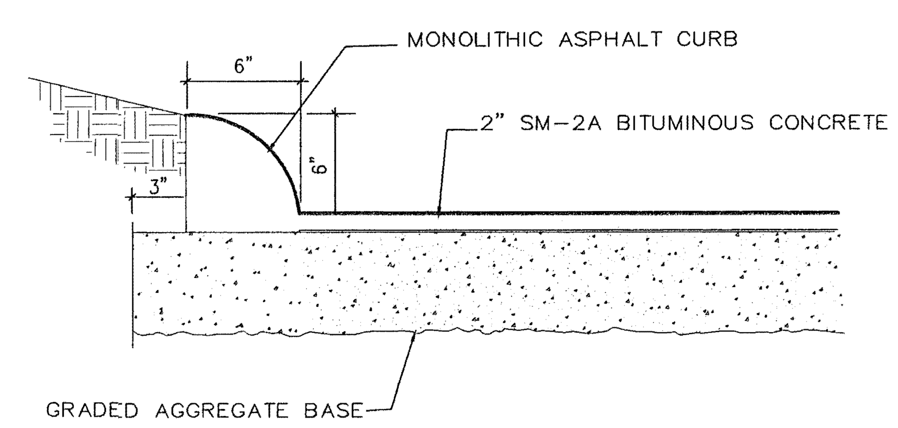


REVISIONS:

| DATE | | DATE | |
|---|---|---|---|
| 4/28/95 | 1. INITIAL SUBMITTAL | | |
| 6/26/95 | 2. MODIFY EROSION + SEDIMENT | | |
| | CONTROL NOTES, BMP SECTION, | | |
| | ADD ANCHOR SLAB DETAIL | | |

WILLIAMSBURG ENVIRONMENTAL GROUP, INC.
Environmental Consultants
516-B SOUTH HENRY STREET
WILLIAMSBURG, VIRGINIA, 23185
(804) 220 - 6869, FAX (804) 229 - 4507

THE LEGENDS GROUP © '94

# MAINTENANCE FACILITY DETAILS AND NOTES
# THE LEGENDS AT STONEHOUSE
## JAMES CITY COUNTY, VIRGINIA

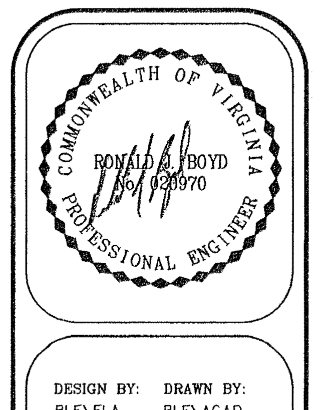


DESIGN BY: BLF\ELA
DRAWN BY: BLF\ACAD
DATE: 4\28\95
CHECKED BY: RB
SHEET: 5
JOB NUMBER: 318

WC050

WC050_STONEHOUSE_LEGENDS_GOLF_COURSE_BMP3_MARSH - 004

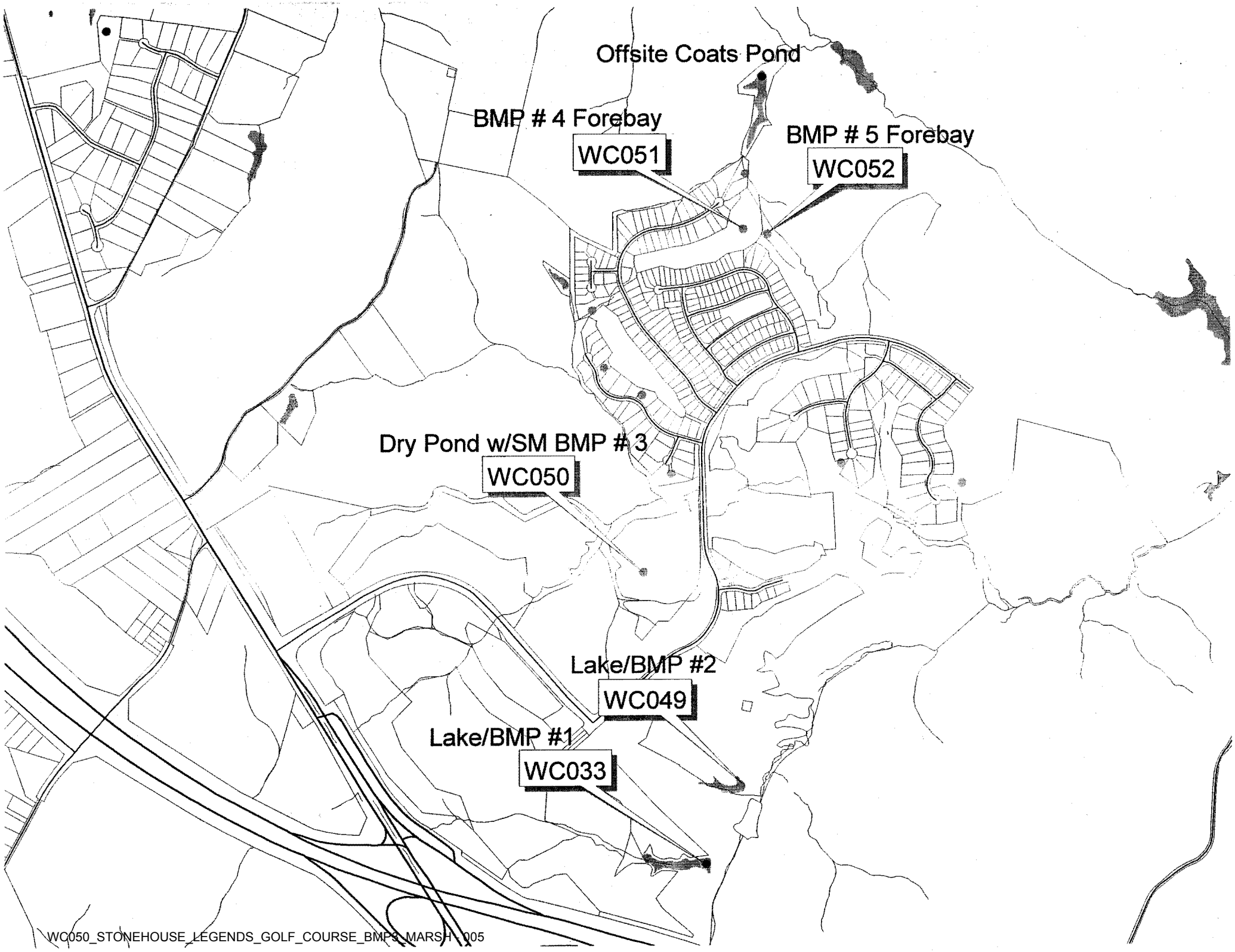
Offsite Coats Pond
BMP # 4 Forebay
WC051
BMP # 5 Forebay
WC052
Dry Pond w/SM BMP # 3
WC050
Lake/BMP #2
WC049
Lake/BMP #1
WC033
WC050_STONEHOUSE_LEGENDS_GOLF_COURSE_BMPS_MARSH - 005

ACILITY

# PROJECT NOTES

1. A MASTER STORMWATER PLAN HAS BEEN SUBMITTED AS PART OF THE LEGENDS AT STONEHOUSE GOLF COURSE PLANS. THE MAINTENANCE FACILITY IS SERVED BY BMP #3.

2. ONLY WETLANDS WITHIN THE GOLF COURSE CORRIDOR HAVE BEEN DELINEATED BY WILLIAMSBURG ENVIRONMENTAL GROUP. ALL OTHER WETLAND LINES ARE CONCEPTUAL IN NATURE AND SHOULD BE USED FOR PLANNING PURPOSES ONLY.

3. NO IMPACTS TO JURISDICTIONAL WETLANDS WILL OCCUR AS A RESULT OF THIS PROJECT.

4. NO LAND DISTURBANCE ACTIVITY WILL OCCUR WITHIN THE LIMITS OF THE RESOURCE PROTECTION AREA (RPA).

5. NO 25% SLOPES WILL BE IMPACTED AS A RESULT OF THIS PROJECT.

6. A PHASE I ARCHAEOLOGICAL ASSESSMENT FOR THE STONEHOUSE PROJECT HAS BEEN SUBMITTED TO JAMES CITY COUNTY IN MAY 1991.

7. PLANS CONFORM TO ALL STATE AND COUNTY ORDINANCES AND REGULATIONS.

8. PROJECT TO USE THE APPROVED/PERMITTED CONSTRUCTION ENTRANCE USED FOR THE LEGENDS AT STONEHOUSE GOLF COURSE.

9. ALL SENSITIVE AREA DISTURBANCE SHOWN ON PLANS TO BE COVERED BY LOCAL, STATE AND FEDERAL PERMITS, AND SUBJECT TO ONSITE APPROVAL BY JAMES CITY COUNTY.

10. A TEMPORARY GRAVEL MAINTENANCE ROAD TO BE CONSTRUCTED WITHIN FUTURE ROAD ROW FROM CLUBHOUSE TO MAINTENANCE FACILITY.

SP-34-95

WC050 BMP#3

COUNTY OF JAMES CITY
FISCAL [illegible]

| | |
|---|---|
| HCO/MAF | 7/7/95 |
| JB/MAF | 7/7/95 |
| RCB/MAF | 7/6/95 |
| [illegible] | [illegible] |
| DEL | 7/3/95 |
| [illegible] | 7/10/95 |
| JCD/MAF | 6/5/95 |
| WB/MAF | 5/12/95 |

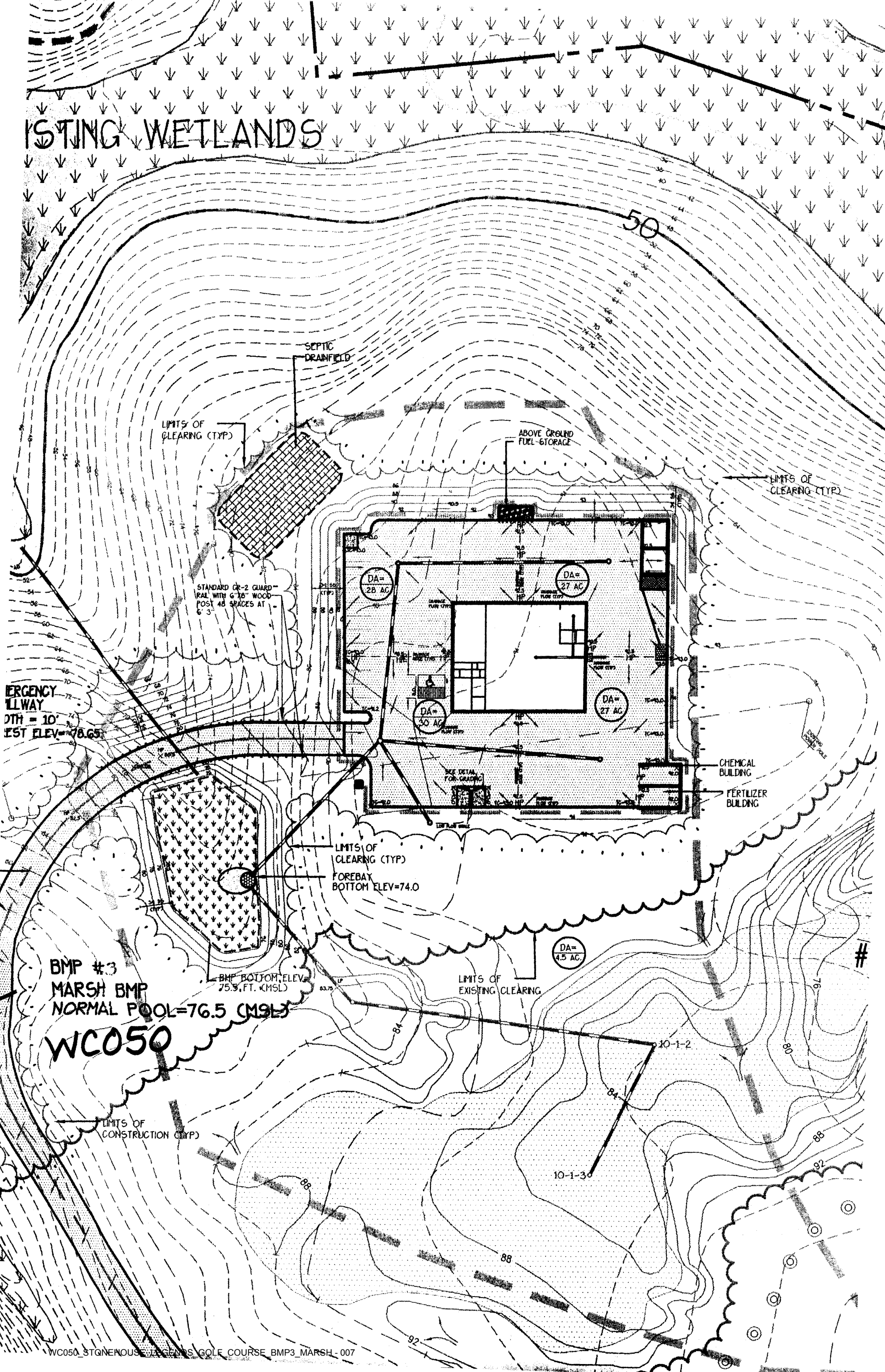
ISTING WETLANDS
50
SEPTIC DRAINFIELD
LIMITS OF CLEARING (TYP)
ABOVE GROUND FUEL STORAGE
LIMITS OF CLEARING (TYP)
STANDARD CR-2 GUARD-RAIL WITH 6"X8" WOOD POST 48 SPACES AT 6' 3"
DA= 28 AC
DA= 27 AC
DA= 30 AC
DA= 27 AC
ERGENCY
LLWAY
DTH = 10'
EST ELEV= 78.65
CHEMICAL BUILDING
FERTILIZER BUILDING
LIMITS OF CLEARING (TYP)
FOREBAY
BOTTOM ELEV=74.0
DA= 4.5 AC.
BMP #3
MARSH BMP
NORMAL POOL=76.5 (MSL)
BMP BOTTOM ELEV= 75.5 FT. (MSL)
LIMITS OF EXISTING CLEARING
WC050
10-1-2
10-1-3
LIMITS OF CONSTRUCTION (TYP)
84
88
92
80
76
#

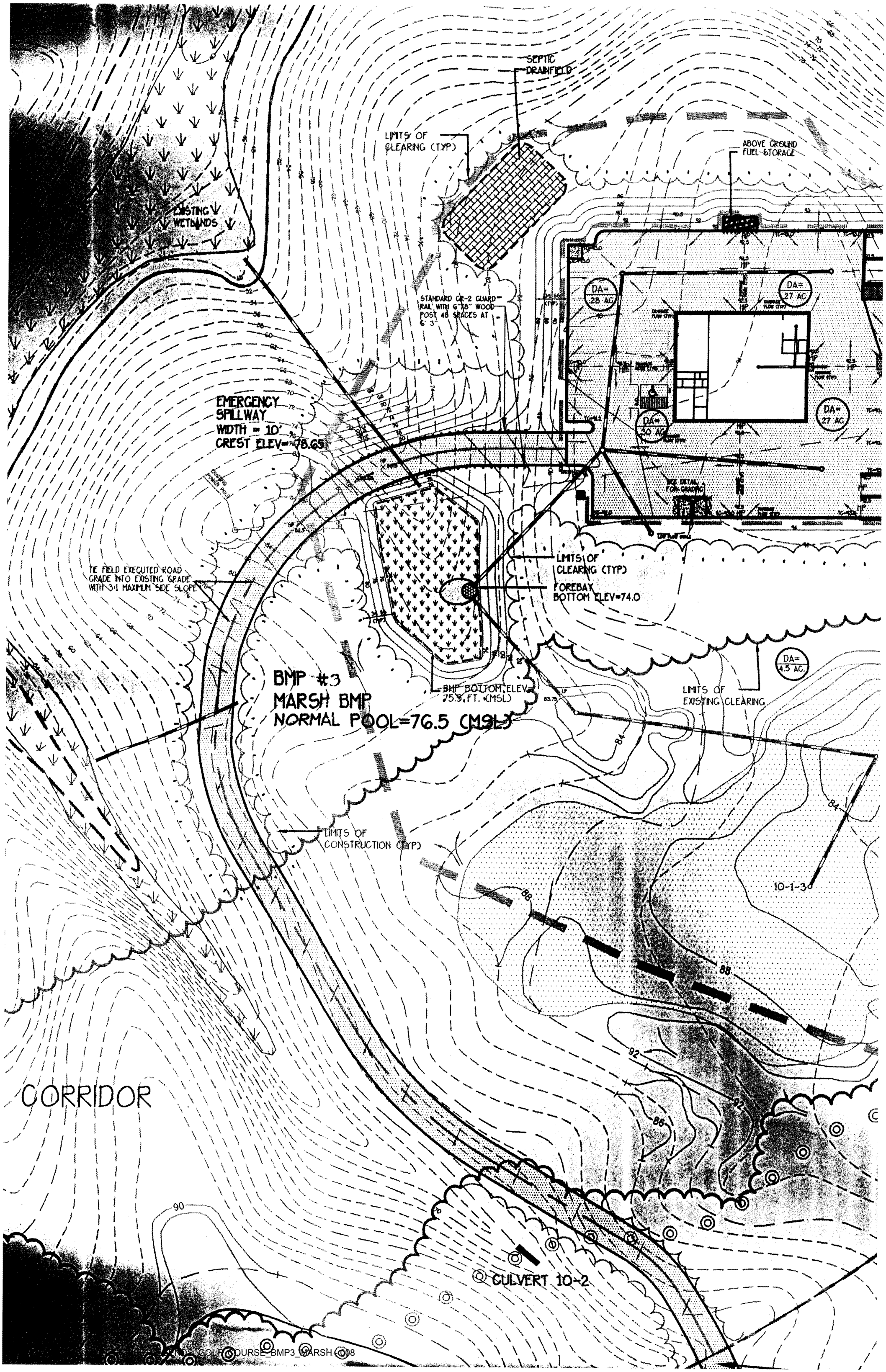
SEPTIC DRAINFIELD
LIMITS OF CLEARING (TYP)
ABOVE GROUND FUEL STORAGE
EXISTING WETLANDS
STANDARD CR-2 GUARD RAIL WITH 6"X8" WOOD POST 48 SPACES AT 6' 3"
DA= .28 AC
DA= 27 AC
DA= 27 AC
DA= .40 AC
EMERGENCY SPILLWAY
WIDTH = 10'
CREST ELEV= 78.65
SEE DETAIL FOR GRADING
TIE FIELD EXECUTED ROAD GRADE INTO EXISTING GRADE WITH 3:1 MAXIMUM SIDE SLOPE
LIMITS OF CLEARING (TYP)
FOREBAY BOTTOM ELEV=74.0
DA= 4.5 AC.
BMP #3
MARSH BMP
NORMAL POOL=76.5 (MSL)
BMP BOTTOM ELEV= 75.3 FT. (MSL)
LIMITS OF EXISTING CLEARING
LIMITS OF CONSTRUCTION (TYP)
10-1-30
CORRIDOR
CULVERT 10-2
84
88
92
86
90

# BMP HYDROLOGIC DATA:

## BMP SIZING

### I Compute Rv

| | | |
|---|---|---|
| Drainage Area = | 4.5 | acre |
| Impervious Area= | 1.25 | acre |
| Impervious %= | 27.78 | % |
| Open Space Impervious | 0 | % |
| Total Impervious | 27.78 | % |

Rv= (.05 + .009(Impervious %)
Rv= 0.30

### II Compute Storage Volume

Design a wetlands enhanced extended detention basin to function as a 50% efficient BMP.
Removal efficiencies are taken from Local Assistance Manual. (CBLAD,1989)
Design based on A Framework For Evaluating Compliance With The 10% Rule In the Chesapeake Bay Critical Area.(MWCOG,1987)

Vol=(Runoff from a 1" storm)
Vol=(Rv)(1")(Drainage Area)
Vol = 0.11 ac-ft
Vol= 4900.5 cu-ft
VOLUME PROVIDED = 8200 CU. FT.

## BMP HYDROLOGY

| | DA acres | CN | Tc hours |
|---|---|---|---|
| Basin Characterisitcs | | | |
| Pre-development | | | |
| Forest | 4.5 | 70 | 0.75 |
| Post-development | | | |
| Woods | 0.6 | 70 | 0.5 |
| Golf | 2.6 | 74 | 0.5 |
| Impervious | 1.3 | 98 | 0.1 |

| | | |
|---|---|---|
| Top of Dam Elevation | 80.0 | ft (msl) |
| Normal Pool Elevation | 76.5 | ft (msl) |

| Hydrologic Summary | 2-yr cfs | 10-yr cfs | 100-yr cfs |
|---|---|---|---|
| Pre-development | 3 | 7 | 13 |
| Proposed Condition Unrouted | 8 | 13 | 20 |
| Proposed Condition Routed | 2 | 5 | 13 |

| Routed Elevations | | |
|---|---|---|
| 2-yr Elevation | 77.50 | ft (msl) |
| 10-yr Elevation | 78.53 | ft (msl) |
| 100-yr Elevation | 79.03 | ft (msl) |

# MAINTENANCE FACILITY UTILITY NOTES:

1. THE SITE WILL BE SERVED BY A 4" PUBLIC NON-COMMUNITY WELL AND SEPTIC SEWAGE DISPOSAL SYSTEM. FINAL WELL AND SEPTIC LOCATIONS WILL BE DESIGNATED UPON THE COMMONWEALTH OF VIRGINIA DEPARTMENT OF HEALTH'S APPROVAL OF THE APPLICATION FOR A SEWAGE DISPOSAL SYSTEM CONSTRUCTION PERMIT.

2. WELL SHALL BE CONSTRUCTED IN CONFORMANCE WITH STANDARDS SPECIFIED IN THE JAMES CITY COUNTY WELL ORDINANCE.

3. SEPTIC SYSTEM SHALL BE CONSTRUCTED IN CONFORMANCE WITH STANDARDS SPECIFIED IN THE COMMONWEALTH OF VIRGINIA STATE BOARD OF

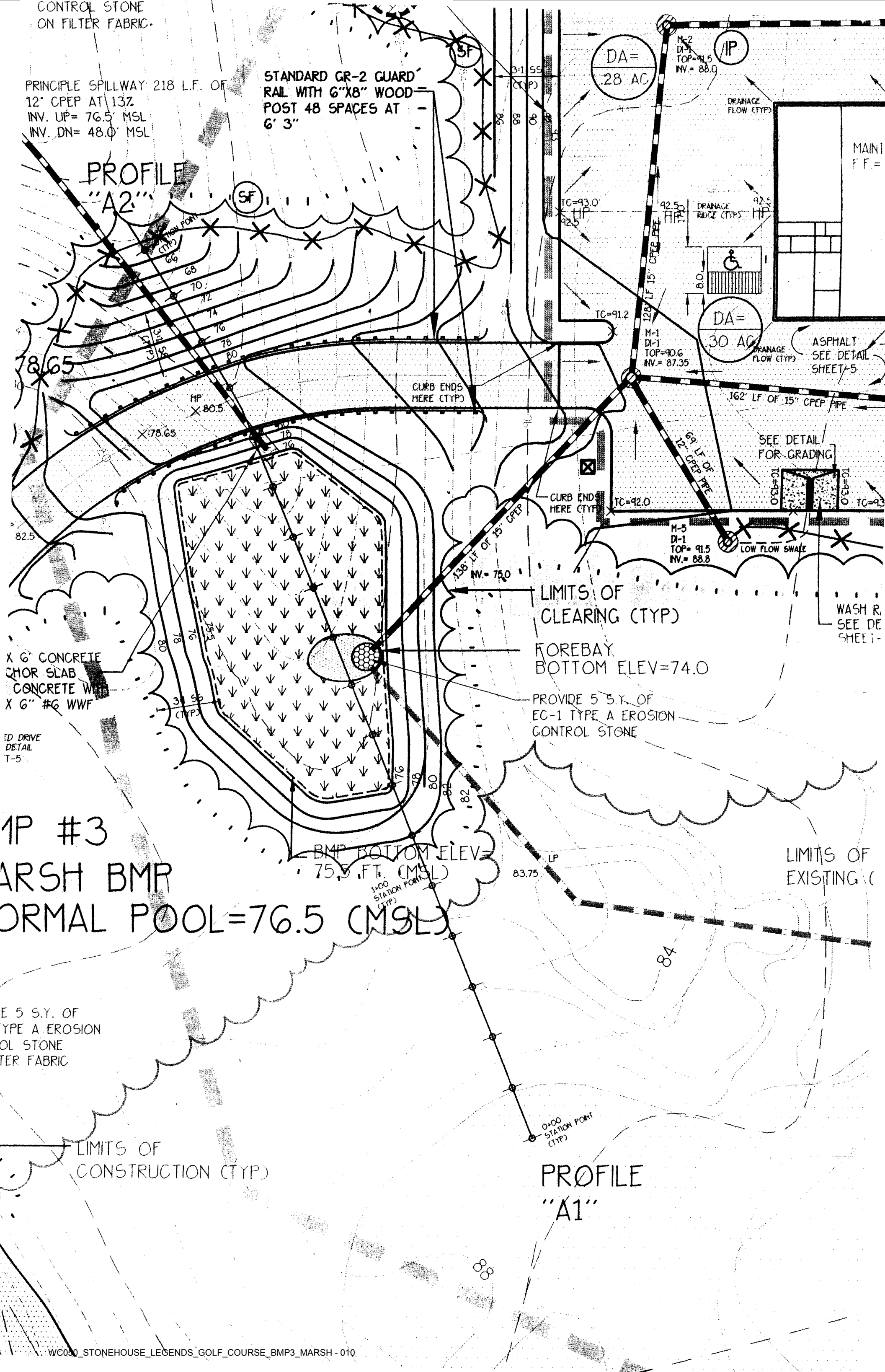
CONTROL STONE
ON FILTER FABRIC.
PRINCIPLE SPILLWAY 218 L.F. OF
12" CPEP AT 13%
INV. UP= 76.5' MSL
INV. DN= 48.0' MSL
STANDARD GR-2 GUARD
RAIL WITH 6"X8" WOOD
POST 48 SPACES AT
6' 3"
PROFILE
"A2"
DA=
.28 AC
DA=
.30 AC
M-2
DI-1
TOP=91.5
INV.= 88.0
M-1
DI-1
TOP=90.6
INV.= 87.35
M-5
DI-1
TOP= 91.5
INV.= 88.8
DRAINAGE
FLOW (TYP)
MAINT
F.F.=
128 LF 15" CPEP PIPE
162' LF OF 15" CPEP PIPE
69 LF OF
12" CPEP PIPE
138' LF OF 15" CPEP
ASPHALT
SEE DETAIL
SHEET-5
SEE DETAIL
FOR GRADING
CURB ENDS
HERE (TYP)
LOW FLOW SWALE
INV.= 75.0
LIMITS OF
CLEARING (TYP)
FOREBAY
BOTTOM ELEV=74.0
PROVIDE 5 S.Y. OF
EC-1 TYPE A EROSION
CONTROL STONE
X 6" CONCRETE
CHOR SLAB
CONCRETE WITH
X 6" #6 WWF
ED DRIVE
DETAIL
T-5
1P #3
ARSH BMP
ORMAL POOL=76.5 (MSL)
BMP BOTTOM ELEV=
75.5 FT. (MSL)
1+00
STATION POINT
(TYP)
LIMITS OF
EXISTING
LIMITS OF
CONSTRUCTION (TYP)
0+00
STATION POINT
(TYP)
PROFILE
"A1"
WC050_STONEHOUSE_LEGENDS_GOLF_COURSE_BMP3_MARSH - 010

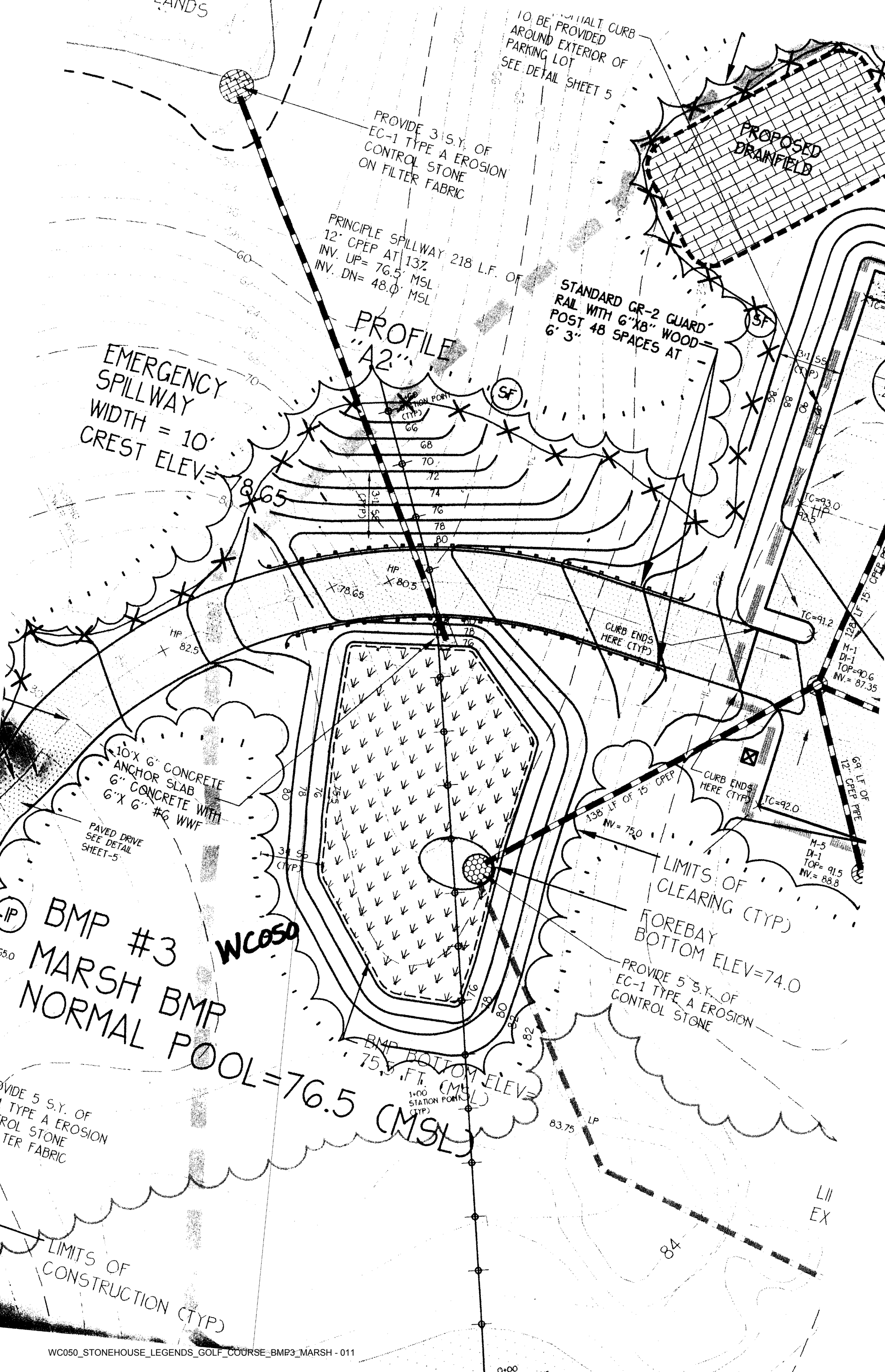
ASPHALT CURB TO BE PROVIDED AROUND EXTERIOR OF PARKING LOT SEE DETAIL SHEET 5
PROVIDE 3 S.Y. OF EC-1 TYPE A EROSION CONTROL STONE ON FILTER FABRIC
PROPOSED DRAINFIELD
PRINCIPLE SPILLWAY 218 L.F. OF 12" CPEP AT 13%
INV. UP= 76.5' MSL
INV. DN= 48.0' MSL
STANDARD GR-2 GUARD RAIL WITH 6"X8" WOOD POST 48 SPACES AT 6' 3"
PROFILE "A2"
EMERGENCY SPILLWAY
WIDTH = 10'
CREST ELEV= 78.65
3:1 SS (TYP)
CURB ENDS HERE (TYP)
128 LF 15" CPEP
M-1
DI-1
TOP=90.6
INV.= 87.35
10'X 6" CONCRETE ANCHOR SLAB
6" CONCRETE WITH 6"X 6" #6 WWF
PAVED DRIVE SEE DETAIL SHEET-5
138' LF OF 15" CPEP
INV= 75.0
69 LF OF 12" CPEP PIPE
M-5
DI-1
TOP= 91.5
INV.= 88.8
LIMITS OF CLEARING (TYP)
BMP #3
WC050
MARSH BMP
NORMAL POOL=76.5 (MSL)
FOREBAY BOTTOM ELEV=74.0
PROVIDE 5 S.Y. OF EC-1 TYPE A EROSION CONTROL STONE
BMP BOTTOM ELEV= 75.5 FT. (MSL)
1+00 STATION POINT (TYP)
LIMITS OF CONSTRUCTION (TYP)

# JAMES CITY COUNTY
# EROSION AND SEDIMENT CONTROL NOTES

THE PURPOSE OF THE EROSION CONTROL MEASURES SHOWN ON THESE PLANS SHALL BE TO PRECLUDE THE TRANSPORT OF ALL WATERBORNE SEDIMENTS RESULTING FROM CONSTRUCTION ACTIVITIES FROM ENTERING ONTO ADJACENT PROPERTIES OF STATE WATERS. IF FIELD INSPECTION REVEALS THE INADEQUACY OF THE PLAN TO CONFINE SEDIMENT TO THE PROJECT SITE, APPROPRIATE MODIFICATIONS WILL BE MADE TO CORRECT ANY PLAN DEFICIENCIES. IN ADDITION TO THESE NOTES, ALL PROVISIONS OF THE VIRGINIA EROSION AND SEDIMENT CONTROL REGULATIONS SHALL APPLY TO THIS PROJECT.

1. ALL EROSION AND SEDIMENT CONTROL MEASURES SHALL BE INSTALLED AND MAINTAINED IN ACCORDANCE WITH THE VIRGINIA EROSION AND SEDIMENT CONTROL HANDBOOK . THE CONTRACTOR SHALL BE THOROUGHLY FAMILIAR WITH ALL APPLICABLE MEASURES CONTAINED THEREIN WHICH MAY BE PERTINENT TO THIS PROJECT.

2. ALL POINTS OF CONSTRUCTION INGRESS AND EGRESS SHALL BE PROTECTED BY A TEMPORARY CONSTRUCTION ENTRANCE TO PREVENT TRACKING OF MUD ONTO PUBLIC RIGHT-OF-WAYS. AN ENTRANCE PERMIT FROM VDOT IS REQUIRED PRIOR TO ANY CONSTRUCTION ACTIVITIES WITHIN STATE RIGHT-OF-WAYS. WHERE SEDIMENT IS TRANSPORTED ONTO A PUBLIC ROAD SURFACE, THE ROAD SHALL BE THOROUGHLY CLEANED AT THE END OF EACH DAY.

3. A PRECONSTRUCTION MEETING SHALL BE HELD ON SITE BETWEEN THE COUNTY, THE DEVELOPER, THE PROJECT ENGINEER, AND THE CONTRACTOR PRIOR TO ISSUANCE OF THE LAND DISTURBING PERMIT. THE CONTRACTOR SHALL SUBMIT A SEQUENCE OF CONSTRUCTION TO THE COUNTY FOR APPROVAL PRIOR TO THE PRECONSTRUCTION MEETING. THE CONTRACTOR WILL SUPPLY CODE COMPLIANCE WITH THE NAME OF THE INDIVIDUAL WHO WILL BE RESPONSIBLE FOR ENSURING MAINTENANCE OF INSTALLED MEASURES ON A DAILY BASIS.

4. SEDIMENT BASINS AND TRAPS, PERIMETER DIKES, SEDIMENT BARRIERS AND OTHER MEASURES INTENDED TO TRAP SEDIMENT ON-SITE MUST BE CONSTRUCTED AS A FIRST STEP IN GRADING AND BE MADE FUNCTIONAL BEFORE UPSLOPE LAND DISTURBANCE TAKES PLACE. EARTHEN STRUCTURES SUCH AS DAMS, DIKES, AND DIVERSIONS MUST BE SEEDED AND MULCHED IMMEDIATELY AFTER INSTALLATION. PERIODIC INSPECTIONS OF THE EROSION CONTROL MEASURES SHALL BE MADE TO ASSESS THEIR CONDITION. ANY NECESSARY MAINTENANCE OF THE MEASURES SHALL BE ACCOMPLISHED IMMEDIATELY UPON NOTIFICATION BY THE COUNTY AND SHALL INCLUDE THE REPAIR OF MEASURES DAMAGED BY ANY SUBCONTRACTOR INCLUDING THOSE OF THE PUBLIC UTILITY COMPANIES.

5. SURFACE FLOWS OVER CUT AND FILL SLOPES SHALL BE CONTROLLED BY EITHER REDIRECTING FLOWS FROM TRANSVERSING THE SLOPES OF BY INSTALLING MECHANICAL DEVICES TO SAFELY LOWER WATER DOWNSLOPE WITHOUT CAUSING EROSION. A TEMPORARY FILL DIVERSION (STD. + SPEC. 3.10) SHALL BE INSTALLED PRIOR TO THE END OF EACH WORKING DAY.

6. SEDIMENT CONTROL MEASURES MAY REQUIRE MINOR FIELD ADJUSTMENTS AT TIME OF CONSTRUCTION TO INSURE THEIR INTENDED PURPOSE IS ACCOMPLISHED. DIVISION OF CODE COMPLIANCE APPROVAL WILL BE REQUIRED FOR OTHER DEVIATIONS FROM THE APPROVED PLANS.

7. THE CONTRACTOR SHALL PLACE SOIL STOCKPILES AT THE LOCATIONS SHOWN ON THIS PLAN OR AS DIRECTED BY THE ENGINEER. SOIL STOCKPILES SHALL BE STABILIZED OR PROTECTED WITH SEDIMENT TRAPPING MEASURES. OFF-SITE WASTE OR BORROW AREAS SHALL BE APPROVED BY THE DIVISION OF CODE COMPLIANCE PRIOR TO THE IMPORT OF ANY BORROW OR EXPORT OF ANY WASTE TO OR FROM THE PROJECT SITE.

8. THE CONTRACTOR SHALL COMPLETE DRAINAGE FACILITIES WITHIN 30 DAYS FOLLOWING COMPLETION OF ROUGH GRADING AT ANY POINT WITHIN THE PROJECT. THE INSTALLATION OF DRAINAGE FACILITIES SHALL TAKE PRECEDENCE OVER ALL UNDERGROUND UTILITIES. OUTFALL DITCHES FROM DRAINAGE STRUCTURES SHALL BE STABILIZED IMMEDIATELY AFTER CONSTRUCTION OF SAME. THIS INCLUDES INSTALLATION OF EROSION CONTROL STONE OR PAVED DITCHES WHERE REQUIRED. ANY DRAINAGE OUTFALLS REQUIRED FOR A STREET MUST BE COMPLETED BEFORE STREET GRADING OR UTILITY INSTALLATION BEGINS.

9. PERMANENT OR TEMPORARY SOIL STABILIZATION MUST BE APPLIED TO ALL DENUDED AREAS WITHIN 7 DAYS AFTER FINAL GRADE IS REACHED ON ANY PORTION OF THE SITE. SOIL STABILIZATION MUST ALSO BE APPLIED TO DENUDED AREAS WHICH MAY NOT BE AT FINAL GRADE BUT WILL REMAIN DORMANT (UNDISTURBED) FOR LONGER THAN 30 DAYS. SOIL STABILIZATION MEASURES INCLUDE VEGETATIVE ESTABLISHMENT, MULCHING AND THE EARLY APPLICATION OF GRAVEL BASE MATERIAL ON AREAS TO BE PAVED.

10. NO MORE THAN 300 FEET OF SANITARY STORM SEWER, WATERLINES, OR UNDERGROUND UTILITY LINES ARE TO BE OPEN AT ONE TIME. FOLLOWING INSTALLATION OF ANY PORTION OF THESE ITEMS, ALL DISTURBED AREAS ARE TO BE IMMEDIATELY STABILIZED (I.E., THE SAME DAY).

11. IF DISTURBED AREA STABILIZATION IS TO BE ACCOMPLISHED DURING THE MONTHS OF DECEMBER, JANUARY, OR FEBRUARY, STABILIZATION SHALL CONSIST OF MULCHING IN ACCORDANCE WITH SPECIFICATION 3.35. SEEDING WILL THEN TAKE PLACE AS SOON AS THE SEASON PERMITS.

12. THE TERM SEEDING, FINAL VEGETATIVE COVER OR STABILIZATION, ON THIS PLAN SHALL MEAN THE SUCCESSFUL GERMINATION AND ESTABLISHMENT OF A STABLE GRASS COVER FROM A PROPERLY PREPARED SEEDBED CONTAINING TH SPECIFIED AMOUNTS OF SEED, LIME, AND FERTILIZING IN ACCORDANCE WITH SPECIFICATION 3.32, PERMANENT SEEDING. IRRIGATION SHALL BE REQUIRED AS NECESSARY TO ENSURE ESTABLISHMENT OF GRASS COVER.

13. ALL SLOPES STEEPER THAN 3:1 SHALL REQUIRE THE USE OF EROSION CONTROL BLANKETS SUCH AS EXCELSIOR BLANKETS TO AID IN THE ESTABLISHMENT OF A VEGETATIVE COVER. INSTALLATION SHALL BE IN ACCORDANCE WITH SPECIFICATION 3.35, MULCHING AND MANUFACTURER S INSTRUCTIONS. NO SLOPES SHALL BE CREATED STEEPER THAN 2:1.

14. INLET PROTECTION IN ACCORDANCE WITH SPECIFICATION 3.07 SHALL BE PROVIDED FOR ALL STORM DRAIN INLETS AS SOON AS PRACTICAL FOLLOWING CONSTRUCTION OF SAME.

15. TEMPORARY LINERS, SUCH AS POLYETHYLENE SHEETS, SHALL BE PROVIDE FOR ALL PAVED DITCHES UNTIL THE PERMANENT CONCRETE LINER IS INSTALLED.

16. PAVED DITCHES SHALL BE REQUIRED WHEREVER EROSION IS EVIDENT. PARTICULAR ATTENTION SHALL BE PAID TO THOSE AREAS WHERE GRADES EXCEED 3 PERCENT.

17. TEMPORARY EROSION CONTROL MEASURES ARE NOT TO BE REMOVED UNTIL ALL DISTURBED AREAS ARE STABILIZED. AFTER STABILIZATION IS COMPLETE, ALL MEASURES SHALL BE REMOVED WITHIN 30 DAYS. TRAPPED SEDIMENT SHALL BE SPREAD AND SEEDED.

18. AS-BUILT DRAWINGS MUST BE PROVIDED FOR ALL DETENTION/BMP FACILITIES. ALSO UPON COMPLETION, THE CONSTRUCTION OF ALL DETENTION/BMP FACILITIES SHALL BE CERTIFIED BY A PROFESSIONAL ENGINEER WHO INSPECTED THE STRUCTURE DURING CONSTRUCTION. THE CERTIFICATION SHALL STATE THAT TO THE BEST OF HIS/HER JUDGMENT, KNOWLEDGE, AND BELIEF, THE STRUCTURE WAS CONSTRUCTED IN ACCORDANCE WITH THE APPROVAL PLANS AND SPECIFICATIONS.

19. A LAND DISTURBING PERMIT AND SILTATION AGREEMENT, WITH SURETY A REQUIRED FOR THIS PROJECT.

20. AS-BUILT DRAWINGS SHALL BE PROVIDED FOR ALL DETENTION BASINS COMPLETION.

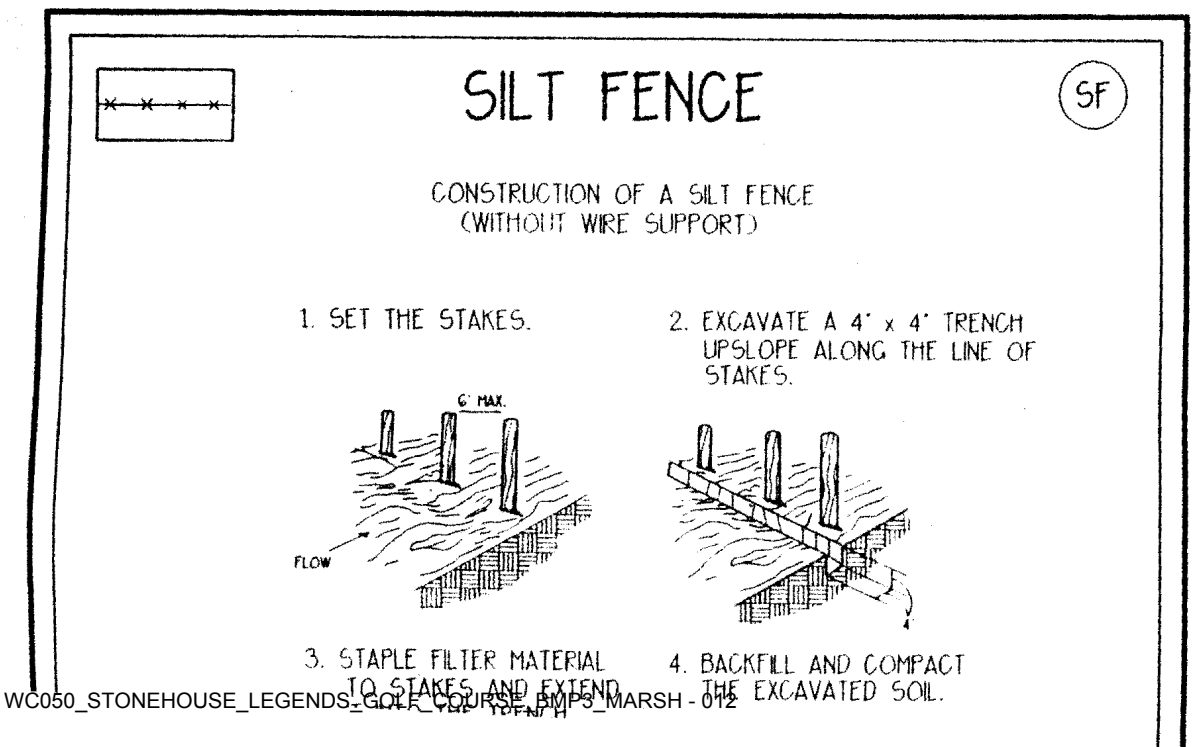


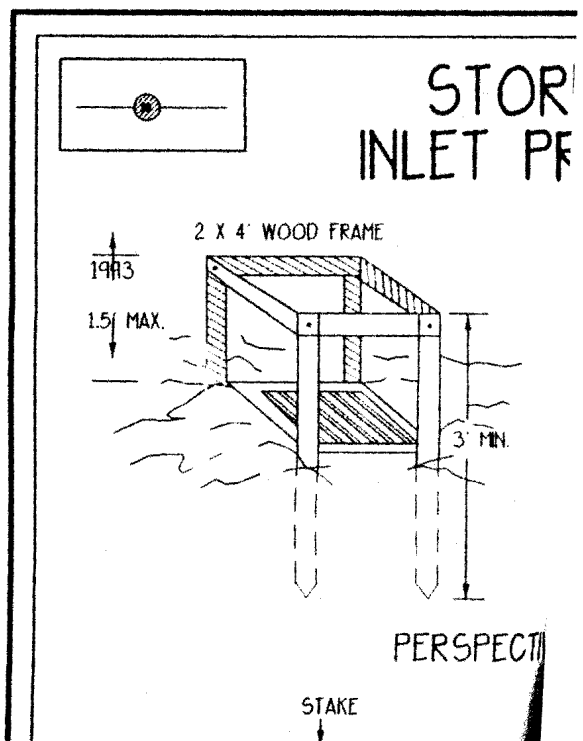

# 6.

# Design calculations

## OPEN SPACE CREDIT

| | Area (ac) | Area (%) |
|---|---|---|
| Wooded Area | 84 | 34% |
| Planted Buffer | 22 | 9% |
| Select Clearing | 48 | 20% |
| Total | 154 | 63% |

## APPROXIMATE BMP SIZE
## SIZED FOR GOLF ONLY

| | Type of BMP | Corridor Drainage Area (ac) | Rv Rv | Required Volume (cf) | BMP Points | |
|---|---|---|---|---|---|---|
| BMP #1 | Existing Wet Pond | 35.5 | 0.06 | 12780 | 11 | @ HOLE #1 |
| BMP #2 | Existing Wet Pond | 22.7 | 0.2 | 27380 | 11 | @ PUTTING RANGE |
| BMP #3 | Wetlands Enhanced Dry Pond | 4.5 | 0.25 | 4090 | 9 | @ MAINTENANCE FACIL. |
| BMP #4 | Wet Pond | 3.7 | 0.06 | 1330 | 9 | @ HOLE #10 GREEN |
| BMP #5 | Wet Pond | 11.5 | 0.06 | 4140 | 9 | @ HOLE #12 GREE |

## APPROXIMATE BMP SIZE
## SIZED FOR FUTURE DEVELOPMENT

| | | Type of BMP | Corridor Drainage Area (ac) | Rv Rv | Required Volume (cf) | BMP Points |
|---|---|---|---|---|---|---|
| WC033 | BMP #1 | Existing Wet Pond | 144 | 0.18 | 161600 | 11 |
| WC049 | BMP #2 | Existing Wet Pond | 41 | 0.28 | 69640 | 11 |
| WC050 | BMP #3 | Wetlands Enhanced Dry Pond | 4.5 | 0.25 | 4090 | 9 |
| WC051 | BMP #4 | Wet Pond | 3.7 | 0.06 | 1330 | 9 |
| WC054 | BMP #5 | Wet Pond | 35 | 0.19 | 40040 | 9 |

# Worksheet For BMP Point System

## Legends at Stonehouse

### A. STRUCTURAL BMP POINT ALLOCATION

| BMP | BMP Points | | Fraction of Site Served By BMP | | Weighted BMP Points |
|---|---|---|---|---|---|
| Existing Lake | 11 | x | 24% | = | 2.64 |
| Maintenance BMP& Hole 10 BMP | 9 | x | 3% | = | 0.30 |
| Hole 12 and 13 BMP's | 9 | x | 5% | = | 0.42 |
| | | x | | = | |
| | TOTAL WEIGHTED BMP POINTS: | | | | **3.36** |

### B. NATURAL OPEN SPACE CREDIT

| Fraction of Site | | Natural Open Space Credit | | Points for Natural Open Space |
|---|---|---|---|---|
| 63% | x | 0.10 | = | **6.29** |

### C. TOTAL WEIGHTED POINTS

| 3.36 | | 6.29 | = | **9.66** |
|---|---|---|---|---|
| Structural BMP Points | | Natural Open Space Points | | **Total** |

otal Site = 245 acres

## OPEN SPACE CREDIT

| | Area (ac) | Area (%) |
|---|---|---|
| Wooded Area | 84 | 34% |
| Planted Buffer | 22 | 9% |
| Select Clearing | 48 | 20% |
| Total | 154 | 63% |

## APPROXIMATE BMP SIZE
## SIZED FOR GOLF ONLY

| | Type of BMP | Corridor Drainage Area (ac) | Rv Rv | Required Volume (cf) | BMP Points | |
|---|---|---|---|---|---|---|
| BMP #1 | Existing Wet Pond | 35.5 | 0.06 | 12780 | 11 | @ HOLE #1 |
| BMP #2 | Existing Wet Pond | 22.7 | 0.2 | 27380 | 11 | @ PUTTING RANGE |
| BMP #3 | Wetlands Enhanced Dry Pond | 4.5 | 0.25 | 4090 | 9 | @ MAINTENANCE FACIL |
| BMP #4 | Wet Pond | 3.7 | 0.06 | 1330 | 9 | @ HOLE #10 GREEN |
| BMP #5 | Wet Pond | 11.5 | 0.06 | 4140 | 9 | @ HOLE #12 GREE |

## APPROXIMATE BMP SIZE
## SIZED FOR FUTURE DEVELOPMENT

| | | Type of BMP | Corridor Drainage Area (ac) | Rv Rv | Required Volume (cf) | BMP Points |
|---|---|---|---|---|---|---|
| WC033 | BMP #1 | Existing Wet Pond | 144 | 0.18 | 161600 | 11 |
| WC049 | BMP #2 | Existing Wet Pond | 41 | 0.28 | 69640 | 11 |
| WC050 | BMP #3 | Wetlands Enhanced Dry Pond | 4.5 | 0.25 | 4090 | 9 |
| WC051 | BMP #4 | Wet Pond | 3.7 | 0.06 | 1330 | 9 |
| WC054 | BMP #5 | Wet Pond | 35 | 0.19 | 40040 | 9 |

# Worksheet For BMP Point System

## Legends at Stonehouse

### A. STRUCTURAL BMP POINT ALLOCATION

| BMP | BMP Points | | Fraction of Site Served By BMP | | Weighted BMP Points |
|---|---|---|---|---|---|
| Existing Lake | 11 | x | 24% | = | 2.64 |
| Maintenance BMP& Hole 10 BMP | 9 | x | 3% | = | 0.30 |
| Hole 12 and 13 BMP's | 9 | x | 5% | = | 0.42 |
| | | x | | = | |
| | TOTAL WEIGHTED BMP POINTS: | | | | **3.36** |

### B. NATURAL OPEN SPACE CREDIT

| Fraction of Site | | Natural Open Space Credit | | Points for Natural Open Space |
|---|---|---|---|---|
| 63% | x | 0.10 | = | **6.29** |

### C. TOTAL WEIGHTED POINTS

| 3.36 | | 6.29 | = | **9.66** |
|---|---|---|---|---|
| Structural BMP Points | | Natural Open Space Points | | **Total** |

otal Site = 245 acres

CODE COMPLIANCE REVIEW COMMENTS
STONEHOUSE GOLF MAINTENANCE FACILITY
PLAN NO. SP-34-95
May 9, 1995 DEC

1. A Land Disturbing Permit and Siltation Agreement, with surety, are required for this project.

2. An Inspection/Maintenance Agreement shall be executed with the county for the BMP facility for this project.

3. As-built drawings must be provided for the detention basin on completion.

4. Install silt fence around the proposed septic drainfield.

5. Replace the Erosion Control Notes on sheet 5 with the revised James City County Erosion Control Notes dated 2/3/95.

6. The following comments pertain to the proposed BMP:
   a. Provide trash protection for the 12-inch principal spillway.
   b. Either pave the remainder of the emergency spillway where it is located on fill or change its location so that the spillway discharge is located on natural ground.
   c. Provide a core trench for the embankment as shown in the VESCH Specification 3.14 for a sediment basin.

7. Revise the drainage area of 6.39 acres shown on sheets 2 and 3 to conform to the 4.5 acre figure used in the calculations.

WILLIAMSBURG
ENVIRONMENTAL
GROUP, INC.

*Environmental Consultants*

# Stonehouse Maintenance Facility Storm Sewer and BMP Hydrologic/Hydraulic Computations

BMP #3
WC 050

*516-B South Henry Street Williamsburg, Virginia 23185 (804) 220-6869 FAX (804) 229-4507*

# Storm Sewer Routings

04/23/95 **STORM SEWER CUSTOM REPORT**

**Data File : GSMAINT.STM** **Return Period: 10 Yrs**
**Rainfall file: GSMAINT.RND** **I = 134.700/ ( Tc + 17.360) ^ 0.940**
**LINE M-1**

FLOW INFO:

| | |
|---|---|
| Incremental area | = 0.30 ac |
| Runoff coefficient | = 0.900 |
| Inlet time | = 5.00 min |
| Inlet intensity | = 7.26 in/h |
| Total CIA | = 6.78 cfs |
| Total flow | = 6.78 cfs |

PIPE INFO:

| | |
|---|---|
| Pipe length | = 136.56 ft |
| Pipe diameter | = 15.00 in |
| Pipe n-value | = 0.011 |
| Capacity at invert slope | = 22.83 cfs |
| Invert elevation upstream | = 87.35 ft |
| Invert elevation downstream | = 75.00 ft |
| Invert slope | = 8.949 % |
| Nat. ground elevation upstrm | = 92.50 ft |
| Nat. ground elevation dwnstrm | = 73.00 ft |
| Crown elevation upstream | = 88.60 ft |
| Crown elevation downstream | = 76.25 ft |

HYDRAULIC INFO:

| | |
|---|---|
| Hydraulic grade elev. upstrm | = 88.39 ft |
| Hydraulic grade elev. dwnstrm | = 77.83 ft |
| Velocity downstream | = 5.53 ft/s |

**LINE M-2**

FLOW INFO:

| | |
|---|---|
| Incremental area | = 0.28 ac |
| Runoff coefficient | = 0.900 |
| Inlet time | = 5.00 min |
| Inlet intensity | = 7.26 in/h |
| Total CIA | = 3.43 cfs |
| Total flow | = 3.43 cfs |

PIPE INFO:

| | |
|---|---|
| Pipe length | = 124.00 ft |
| Pipe diameter | = 15.00 in |
| Pipe n-value | = 0.011 |
| Capacity at invert slope | = 5.44 cfs |
| Invert elevation upstream | = 88.00 ft |
| Invert elevation downstream | = 87.35 ft |
| Invert slope | = 0.508 % |
| Nat. ground elevation upstrm | = 92.50 ft |
| Nat. ground elevation dwnstrm | = 92.50 ft |
| Crown elevation upstream | = 89.25 ft |
| Crown elevation downstream | = 88.60 ft |

HYDRAULIC INFO:

| | |
|---|---|
| Hydraulic grade elev. upstrm | = 89.23 ft |
| Hydraulic grade elev. dwnstrm | = 88.99 ft |
| Velocity downstream | = 2.79 ft/s |

**LINE M-3**

FLOW INFO:

| | |
|---|---|
| Incremental area | = 0.27 ac |
| Runoff coefficient | = 0.900 |
| Inlet time | = 5.00 min |
| Inlet intensity | = 7.26 in/h |
| Total CIA | = 1.76 cfs |
| Total flow | = 1.76 cfs |

PIPE INFO:

| | |
|---|---|
| Pipe length | = 149.00 ft |
| Pipe diameter | = 15.00 in |
| Pipe n-value | = 0.011 |
| Capacity at invert slope | = 5.52 cfs |
| Invert elevation upstream | = 88.80 ft |
| Invert elevation downstream | = 88.00 ft |
| Invert slope | = 0.523 % |
| Nat. ground elevation upstrm | = 92.50 ft |
| Nat. ground elevation dwnstrm | = 92.50 ft |
| Crown elevation upstream | = 90.05 ft |
| Crown elevation downstream | = 89.25 ft |

HYDRAULIC INFO:

| | |
|---|---|
| Hydraulic grade elev. upstrm | = 89.55 ft |
| Hydraulic grade elev. dwnstrm | = 89.35 ft |
| Velocity downstream | = 1.44 ft/s |

M-5 for wash rock drainage only.

**LINE M-4**

FLOW INFO:

| | |
|---|---|
| Incremental area | = 0.27 ac |
| Runoff coefficient | = 0.900 |
| Inlet time | = 5.00 min |
| Inlet intensity | = 7.26 in/h |
| Total CIA | = 1.76 cfs |
| Total flow | = 1.76 cfs |

PIPE INFO:

| | |
|---|---|
| Pipe length | = 158.00 ft |
| Pipe diameter | = 15.00 in |
| Pipe n-value | = 0.011 |
| Capacity at invert slope | = 4.83 cfs |
| Invert elevation upstream | = 88.00 ft |
| Invert elevation downstream | = 87.35 ft |
| Invert slope | = 0.401 % |
| Nat. ground elevation upstrm | = 92.50 ft |
| Nat. ground elevation dwnstrm | = 92.50 ft |
| Crown elevation upstream | = 89.25 ft |
| Crown elevation downstream | = 88.60 ft |

HYDRAULIC INFO:

| | |
|---|---|
| Hydraulic grade elev. upstrm | = 89.10 ft |
| Hydraulic grade elev. dwnstrm | = 88.99 ft |
| Velocity downstream | = 1.44 ft/s |

# BMP Analysis

# Water Quality Calculations

# Greensprings Golf Maintenance Facility
## BMP Sizing

### I Compute Rv

Plan says 6.4 ac

| | | |
|---|---|---|
| Drainage Area = | 4.5 | acre |
| Impervious Area= | 1.25 | acre |
| Impervious %= | 27.78 | % |
| Open Space Impervious | 0 | % |
| Total Impervious | 27.78 | % |

Rv= (.05 + .009(Impervious %)
Rv= 0.30

### II Compute Storage Volume

Design a wetlands enhanced extended detention basin to function as a 50% efficient E
Removal efficiencies are taken from Local Assistance Manual. (CBLAD,1989)
Design based on A Framework For Evaluating Compliance With The 10% Rule In the Che

Vol=(Runoff from a 1" storm)
Vol=(Rv)(1")(Drainage Area)
Vol = 0.11 ac-ft
Vol= 4901 cu-ft

# Time of Concentration Computations

# Pre-development Hydrology Computations

Return Frequency: 2 years

TR-55 TABULAR HYDROGRAPH METHOD
Type II. Distribution
(24 hr. Duration Storm)

Executed: 03-14-1995 19:19:46
Watershed file: --> C:\PONDPACK\SH3PRE .MOP
Hydrograph file: --> C:\PONDPACK\SH3PR2.HYD

Stonehouse
BMP#3
Pre-development

>>>> Input Parameters Used to Compute Hydrograph <<<<

| Subarea Description | AREA (acres) | CN | Tc (hrs) | * Tt (hrs) | Precip. (in) | Runoff (in) | Ia/p input/used | |
|---|---|---|---|---|---|---|---|---|
| BMP #3 | 4.50 | 70.0 | 0.75 | 0.00 | 3.60 | 1.07 | I.24 | .24 |

* Travel time from subarea outfall to composite watershed outfall point.
I -- Subarea where user specified interpolation between Ia/p tables.

Total area = 4.50 acres or 0.00703 sq.mi
Peak discharge = 3 cfs

>>>> Computer Modifications of Input Parameters <<<<<

| Subarea Description | Input Values Tc (hr) | Input Values * Tt (hr) | Rounded Values Tc (hr) | Rounded Values * Tt (hr) | Ia/p Interpolated (Yes/No) | Ia/p Messages |
|---|---|---|---|---|---|---|
| BMP #3 | 0.80 | 0.00 | 0.75 | 0.00 | Yes | -- |

* Travel time from subarea outfall to composite watershed outfall point.

Return Frequency: 2 years

TR-55 TABULAR HYDROGRAPH METHOD
Type II. Distribution
(24 hr. Duration Storm)

Executed: 03-14-1995 19:19:46
Watershed file: --> C:\PONDPACK\SH3PRE .MOP
Hydrograph file: --> C:\PONDPACK\SH3PR2.HYD

Stonehouse
BMP#3
Pre-development

>>>> Summary of Subarea Times to Peak <<<<

| Subarea | Peak Discharge at Composite Outfall (cfs) | Time to Peak at Composite Outfall (hrs) |
|---|---|---|
| BMP #3 | 3 | 12.6 |
| Composite Watershed | 3 | 12.6 |

Return Frequency: 2 years

TR-55 TABULAR HYDROGRAPH METHOD
Type II. Distribution
(24 hr. Duration Storm)

Executed: 03-14-1995 19:19:46
Watershed file: --> C:\PONDPACK\SH3PRE .MOP
Hydrograph file: --> C:\PONDPACK\SH3PR2.HYD

Stonehouse
BMP#3
Pre-development

Composite Hydrograph Summary (cfs)

| Subarea Description | 11.0 hr | 11.3 hr | 11.6 hr | 11.9 hr | 12.0 hr | 12.1 hr | 12.2 hr | 12.3 hr | 12.4 hr |
|---|---|---|---|---|---|---|---|---|---|
| BMP #3 | 0 | 0 | 0 | 0 | 0 | 0 | 0 | 1 | 2 |
| Total (cfs) | 0 | 0 | 0 | 0 | 0 | 0 | 0 | 1 | 2 |

| Subarea Description | 12.5 hr | 12.6 hr | 12.7 hr | 12.8 hr | 13.0 hr | 13.2 hr | 13.4 hr | 13.6 hr | 13.8 hr |
|---|---|---|---|---|---|---|---|---|---|
| BMP #3 | 2 | 3 | 3 | 3 | 2 | 1 | 1 | 1 | 1 |
| Total (cfs) | 2 | 3 | 3 | 3 | 2 | 1 | 1 | 1 | 1 |

| Subarea Description | 14.0 hr | 14.3 hr | 14.6 hr | 15.0 hr | 15.5 hr | 16.0 hr | 16.5 hr | 17.0 hr | 17.5 hr |
|---|---|---|---|---|---|---|---|---|---|
| BMP #3 | 1 | 0 | 0 | 0 | 0 | 0 | 0 | 0 | 0 |
| Total (cfs) | 1 | 0 | 0 | 0 | 0 | 0 | 0 | 0 | 0 |

| Subarea Description | 18.0 hr | 19.0 hr | 20.0 hr | 22.0 hr | 26.0 hr |
|---|---|---|---|---|---|
| BMP #3 | 0 | 0 | 0 | 0 | 0 |
| Total (cfs) | 0 | 0 | 0 | 0 | 0 |

Return Frequency: 10 years

TR-55 TABULAR HYDROGRAPH METHOD
Type II. Distribution
(24 hr. Duration Storm)

Executed: 03-14-1995 19:19:46
Watershed file: --> C:\PONDPACK\SH3PRE .MOP
Hydrograph file: --> C:\PONDPACK\SH3PR10.HYD

Stonehouse
BMP#3
Pre-development

>>>> Input Parameters Used to Compute Hydrograph <<<<

| Subarea Description | AREA (acres) | CN | Tc (hrs) | * Tt (hrs) | Precip. (in) | Runoff (in) | Ia/p input/used |
|---|---|---|---|---|---|---|---|
| BMP #3 | 4.50 | 70.0 | 0.75 | 0.00 | 5.70 | 2.57 | I.15 .15 |

* Travel time from subarea outfall to composite watershed outfall point.
I -- Subarea where user specified interpolation between Ia/p tables.

Total area = 4.50 acres or 0.00703 sq.mi
Peak discharge = 7 cfs

>>>> Computer Modifications of Input Parameters <<<<<

| Subarea Description | Input Values Tc (hr) | * Tt (hr) | Rounded Values Tc (hr) | * Tt (hr) | Ia/p Interpolated (Yes/No) | Ia/p Messages |
|---|---|---|---|---|---|---|
| BMP #3 | 0.80 | 0.00 | 0.75 | 0.00 | Yes | -- |

Travel time from subarea outfall to composite watershed outfall point.

Return Frequency: 10 years

TR-55 TABULAR HYDROGRAPH METHOD
Type II. Distribution
(24 hr. Duration Storm)

Executed: 03-14-1995 19:19:46
Watershed file: --> C:\PONDPACK\SH3PRE .MOP
Hydrograph file: --> C:\PONDPACK\SH3PR10.HYD

Stonehouse
BMP#3
Pre-development

>>>> Summary of Subarea Times to Peak <<<<

| Subarea | Peak Discharge at Composite Outfall (cfs) | Time to Peak at Composite Outfall (hrs) |
|---|---|---|
| BMP #3 | 7 | 12.6 |
| Composite Watershed | 7 | 12.6 |

Return Frequency: 10 years

TR-55 TABULAR HYDROGRAPH METHOD
Type II. Distribution
(24 hr. Duration Storm)

Executed: 03-14-1995 19:19:46
Watershed file: --> C:\PONDPACK\SH3PRE .MOP
Hydrograph file: --> C:\PONDPACK\SH3PR10.HYD

Stonehouse
BMP#3
Pre-development

Composite Hydrograph Summary (cfs)

| Subarea Description | 11.0 hr | 11.3 hr | 11.6 hr | 11.9 hr | 12.0 hr | 12.1 hr | 12.2 hr | 12.3 hr | 12.4 hr |
|---|---|---|---|---|---|---|---|---|---|
| BMP #3 | 0 | 0 | 0 | 0 | 1 | 1 | 2 | 3 | 5 |
| Total (cfs) | 0 | 0 | 0 | 0 | 1 | 1 | 2 | 3 | 5 |

| Subarea Description | 12.5 hr | 12.6 hr | 12.7 hr | 12.8 hr | 13.0 hr | 13.2 hr | 13.4 hr | 13.6 hr | 13.8 hr |
|---|---|---|---|---|---|---|---|---|---|
| BMP #3 | 6 | 7 | 7 | 6 | 5 | 3 | 2 | 2 | 1 |
| Total (cfs) | 6 | 7 | 7 | 6 | 5 | 3 | 2 | 2 | 1 |

| Subarea Description | 14.0 hr | 14.3 hr | 14.6 hr | 15.0 hr | 15.5 hr | 16.0 hr | 16.5 hr | 17.0 hr | 17.5 hr |
|---|---|---|---|---|---|---|---|---|---|
| BMP #3 | 1 | 1 | 1 | 1 | 1 | 1 | 0 | 0 | 0 |
| Total (cfs) | 1 | 1 | 1 | 1 | 1 | 1 | 0 | 0 | 0 |

| Subarea Description | 18.0 hr | 19.0 hr | 20.0 hr | 22.0 hr | 26.0 hr |
|---|---|---|---|---|---|
| BMP #3 | 0 | 0 | 0 | 0 | 0 |
| Total (cfs) | 0 | 0 | 0 | 0 | 0 |

Return Frequency: 100 years

TR-55 TABULAR HYDROGRAPH METHOD
Type II. Distribution
(24 hr. Duration Storm)

Executed: 03-14-1995 19:19:46
Watershed file: --> C:\PONDPACK\SH3PRE .MOP
Hydrograph file: --> C:\PONDPACK\SH3PR100.HYD

Stonehouse
BMP#3
Pre-development

>>>> Input Parameters Used to Compute Hydrograph <<<<

| Subarea Description | AREA (acres) | CN | Tc (hrs) | * Tt (hrs) | Precip. (in) | Runoff (in) | Ia/p input/used | |
|---|---|---|---|---|---|---|---|---|
| BMP #3 | 4.50 | 70.0 | 0.75 | 0.00 | 8.10 | 4.55 | I.11 | .11 |

* Travel time from subarea outfall to composite watershed outfall point.
I -- Subarea where user specified interpolation between Ia/p tables.

Total area = 4.50 acres or 0.00703 sq.mi
Peak discharge = 13 cfs

>>>> Computer Modifications of Input Parameters <<<<<

| Subarea Description | Input Values Tc (hr) | * Tt (hr) | Rounded Values Tc (hr) | * Tt (hr) | Ia/p Interpolated (Yes/No) | Ia/p Messages |
|---|---|---|---|---|---|---|
| BMP #3 | 0.80 | 0.00 | 0.75 | 0.00 | Yes | -- |

* Travel time from subarea outfall to composite watershed outfall point.

TR-55 TABULAR HYDROGRAPH METHOD
Type II. Distribution
(24 hr. Duration Storm)

Executed: 03-14-1995 19:19:46
Watershed file: --> C:\PONDPACK\SH3PRE .MOP
Hydrograph file: --> C:\PONDPACK\SH3PR100.HYD

Stonehouse
BMP#3
Pre-development

>>>> Summary of Subarea Times to Peak <<<<

| Subarea | Peak Discharge at Composite Outfall (cfs) | Time to Peak at Composite Outfall (hrs) |
|---|---|---|
| BMP #3 | 13 | 12.6 |
| Composite Watershed | 13 | 12.6 |

TR-55 TABULAR HYDROGRAPH METHOD
Type II. Distribution
(24 hr. Duration Storm)

Executed: 03-14-1995 19:19:46
Watershed file: --> C:\PONDPACK\SH3PRE .MOP
Hydrograph file: --> C:\PONDPACK\SH3PR100.HYD

Stonehouse
BMP#3
Pre-development

Composite Hydrograph Summary (cfs)

| Subarea Description | 11.0 hr | 11.3 hr | 11.6 hr | 11.9 hr | 12.0 hr | 12.1 hr | 12.2 hr | 12.3 hr | 12.4 hr |
|---|---|---|---|---|---|---|---|---|---|
| BMP #3 | 0 | 1 | 1 | 1 | 1 | 2 | 4 | 6 | 9 |
| Total (cfs) | 0 | 1 | 1 | 1 | 1 | 2 | 4 | 6 | 9 |

| Subarea Description | 12.5 hr | 12.6 hr | 12.7 hr | 12.8 hr | 13.0 hr | 13.2 hr | 13.4 hr | 13.6 hr | 13.8 hr |
|---|---|---|---|---|---|---|---|---|---|
| BMP #3 | 12 | 13 | 13 | 12 | 8 | 6 | 4 | 3 | 2 |
| Total (cfs) | 12 | 13 | 13 | 12 | 8 | 6 | 4 | 3 | 2 |

| Subarea Description | 14.0 hr | 14.3 hr | 14.6 hr | 15.0 hr | 15.5 hr | 16.0 hr | 16.5 hr | 17.0 hr | 17.5 hr |
|---|---|---|---|---|---|---|---|---|---|
| BMP #3 | 2 | 2 | 1 | 1 | 1 | 1 | 1 | 1 | 1 |
| Total (cfs) | 2 | 2 | 1 | 1 | 1 | 1 | 1 | 1 | 1 |

| Subarea Description | 18.0 hr | 19.0 hr | 20.0 hr | 22.0 hr | 26.0 hr |
|---|---|---|---|---|---|
| BMP #3 | 1 | 1 | 0 | 0 | 0 |
| Total (cfs) | 1 | 1 | 0 | 0 | 0 |

# Post-development Hydrology Computations

Return Frequency: 2 years

TR-55 TABULAR HYDROGRAPH METHOD
Type II. Distribution
(24 hr. Duration Storm)

Executed: 03-14-1995 18:48:23
Watershed file: --> C:\PONDPACK\SH3PST .MOP
Hydrograph file: --> C:\PONDPACK\SH3PS2.HYD

Stonehouse
BMP#3
Postdevelopment

>>>> Input Parameters Used to Compute Hydrograph <<<<

| Subarea Description | AREA (acres) | CN | Tc (hrs) | * Tt (hrs) | Precip. (in) | Runoff (in) | Ia/p input/used | |
|---|---|---|---|---|---|---|---|---|
| Forest | 0.60 | 70.0 | 0.50 | 0.00 | 3.60 | 1.07 | I.24 | .24 |
| Golf | 2.60 | 74.0 | 0.50 | 0.00 | 3.60 | 1.31 | I.2 | .20 |
| Pavement | 1.30 | 98.0 | 0.10 | 0.00 | 3.60 | 3.37 | I.01 | .10 |

* Travel time from subarea outfall to composite watershed outfall point.
I -- Subarea where user specified interpolation between Ia/p tables.

Total area = 4.50 acres or 0.00703 sq.mi
Peak discharge = 8 cfs

>>>> Computer Modifications of Input Parameters <<<<<

| Subarea Description | Input Values Tc (hr) | * Tt (hr) | Rounded Values Tc (hr) | * Tt (hr) | Ia/p Interpolated (Yes/No) | Ia/p Messages |
|---|---|---|---|---|---|---|
| Forest | 0.60 | 0.00 | 0.50 | 0.00 | Yes | -- |
| Golf | 0.60 | 0.00 | 0.50 | 0.00 | Yes | -- |
| Pavement | 0.10 | 0.00 | ** | ** | No | Computed Ia/p < .1 |

* Travel time from subarea outfall to composite watershed outfall point.
** Tc & Tt are available in the hydrograph tables.

Return Frequency: 2 years

TR-55 TABULAR HYDROGRAPH METHOD
Type II. Distribution
(24 hr. Duration Storm)

Executed: 03-14-1995 18:48:23
Watershed file: --> C:\PONDPACK\SH3PST .MOP
Hydrograph file: --> C:\PONDPACK\SH3PS2.HYD

Stonehouse
BMP#3
Postdevelopment

>>>> Summary of Subarea Times to Peak <<<<

| Subarea | Peak Discharge at Composite Outfall (cfs) | Time to Peak at Composite Outfall (hrs) |
|---|---|---|
| Forest | 0 | 0.0 |
| Golf | 3 | 12.4 |
| Pavement | 7 | 12.1 |
| Composite Watershed | 8 | 12.1 |

Return Frequency: 2 years

TR-55 TABULAR HYDROGRAPH METHOD
Type II. Distribution
(24 hr. Duration Storm)

Executed: 03-14-1995 18:48:23
Watershed file: --> C:\PONDPACK\SH3PST .MOP
Hydrograph file: --> C:\PONDPACK\SH3PS2.HYD

Stonehouse
BMP#3
Postdevelopment

Composite Hydrograph Summary (cfs)

| Subarea Description | 11.0 hr | 11.3 hr | 11.6 hr | 11.9 hr | 12.0 hr | 12.1 hr | 12.2 hr | 12.3 hr | 12.4 hr |
|---|---|---|---|---|---|---|---|---|---|
| Forest | 0 | 0 | 0 | 0 | 0 | 0 | 0 | 0 | 0 |
| Golf | 0 | 0 | 0 | 0 | 0 | 1 | 1 | 2 | 3 |
| Pavement | 0 | 0 | 0 | 2 | 4 | 7 | 4 | 1 | 1 |
| Total (cfs) | 0 | 0 | 0 | 2 | 4 | 8 | 5 | 3 | 4 |

| Subarea Description | 12.5 hr | 12.6 hr | 12.7 hr | 12.8 hr | 13.0 hr | 13.2 hr | 13.4 hr | 13.6 hr | 13.8 hr |
|---|---|---|---|---|---|---|---|---|---|
| Forest | 0 | 0 | 0 | 0 | 0 | 0 | 0 | 0 | 0 |
| Golf | 3 | 2 | 2 | 1 | 1 | 1 | 0 | 0 | 0 |
| Pavement | 1 | 1 | 1 | 1 | 0 | 0 | 0 | 0 | 0 |
| Total (cfs) | 4 | 3 | 3 | 2 | 1 | 1 | 0 | 0 | 0 |

Return Frequency: 2 years

TR-55 TABULAR HYDROGRAPH METHOD
Type II. Distribution
(24 hr. Duration Storm)

Executed: 03-14-1995 18:48:23
Watershed file: --> C:\PONDPACK\SH3PST .MOP
Hydrograph file: --> C:\PONDPACK\SH3PS2.HYD

Stonehouse
BMP#3
Postdevelopment

Composite Hydrograph Summary (cfs)

| Subarea Description | 14.0 hr | 14.3 hr | 14.6 hr | 15.0 hr | 15.5 hr | 16.0 hr | 16.5 hr | 17.0 hr | 17.5 hr |
|---|---|---|---|---|---|---|---|---|---|
| Forest | 0 | 0 | 0 | 0 | 0 | 0 | 0 | 0 | 0 |
| Golf | 0 | 0 | 0 | 0 | 0 | 0 | 0 | 0 | 0 |
| Pavement | 0 | 0 | 0 | 0 | 0 | 0 | 0 | 0 | 0 |
| Total (cfs) | 0 | 0 | 0 | 0 | 0 | 0 | 0 | 0 | 0 |

| Subarea Description | 18.0 hr | 19.0 hr | 20.0 hr | 22.0 hr | 26.0 hr |
|---|---|---|---|---|---|
| Forest | 0 | 0 | 0 | 0 | 0 |
| Golf | 0 | 0 | 0 | 0 | 0 |
| Pavement | 0 | 0 | 0 | 0 | 0 |
| Total (cfs) | 0 | 0 | 0 | 0 | 0 |

Return Frequency: 10 years

TR-55 TABULAR HYDROGRAPH METHOD
Type II. Distribution
(24 hr. Duration Storm)

Executed: 03-14-1995 18:48:23
Watershed file: --> C:\PONDPACK\SH3PST .MOP
Hydrograph file: --> C:\PONDPACK\SH3PS10.HYD

Stonehouse
BMP#3
Postdevelopment

>>>> Input Parameters Used to Compute Hydrograph <<<<

| Subarea Description | AREA (acres) | CN | Tc (hrs) | * Tt (hrs) | Precip. (in) | Runoff (in) | Ia/p input/used | |
|---|---|---|---|---|---|---|---|---|
| Forest | 0.60 | 70.0 | 0.50 | 0.00 | 5.70 | 2.57 | I.15 | .15 |
| Golf | 2.60 | 74.0 | 0.50 | 0.00 | 5.70 | 2.93 | I.12 | .12 |
| Pavement | 1.30 | 98.0 | 0.10 | 0.00 | 5.70 | 5.46 | I.01 | .10 |

* Travel time from subarea outfall to composite watershed outfall point.
I -- Subarea where user specified interpolation between Ia/p tables.

Total area = 4.50 acres or 0.00703 sq.mi
Peak discharge = 13 cfs

>>>> Computer Modifications of Input Parameters <<<<<

| Subarea Description | Input Values Tc (hr) | Input Values * Tt (hr) | Rounded Values Tc (hr) | Rounded Values * Tt (hr) | Ia/p Interpolated (Yes/No) | Ia/p Messages |
|---|---|---|---|---|---|---|
| Forest | 0.60 | 0.00 | 0.50 | 0.00 | Yes | -- |
| Golf | 0.60 | 0.00 | 0.50 | 0.00 | Yes | -- |
| Pavement | 0.10 | 0.00 | ** | ** | No | Computed Ia/p < .1 |

* Travel time from subarea outfall to composite watershed outfall point.
** Tc & Tt are available in the hydrograph tables.

Return Frequency: 10 years

TR-55 TABULAR HYDROGRAPH METHOD
Type II. Distribution
(24 hr. Duration Storm)

Executed: 03-14-1995 18:48:23
Watershed file: --> C:\PONDPACK\SH3PST .MOP
Hydrograph file: --> C:\PONDPACK\SH3PS10.HYD

Stonehouse
BMP#3
Postdevelopment

>>>> Summary of Subarea Times to Peak <<<<

| Subarea | Peak Discharge at Composite Outfall (cfs) | Time to Peak at Composite Outfall (hrs) |
|---|---|---|
| Forest | 1 | 12.2 |
| Golf | 6 | 12.4 |
| Pavement | 11 | 12.1 |
| Composite Watershed | 13 | 12.1 |

Return Frequency: 10 years

TR-55 TABULAR HYDROGRAPH METHOD
Type II. Distribution
(24 hr. Duration Storm)

Executed: 03-14-1995 18:48:23
Watershed file: --> C:\PONDPACK\SH3PST .MOP
Hydrograph file: --> C:\PONDPACK\SH3PS10.HYD

Stonehouse
BMP#3
Postdevelopment

Composite Hydrograph Summary (cfs)

| Subarea Description | 11.0 hr | 11.3 hr | 11.6 hr | 11.9 hr | 12.0 hr | 12.1 hr | 12.2 hr | 12.3 hr | 12.4 hr |
|---|---|---|---|---|---|---|---|---|---|
| Forest | 0 | 0 | 0 | 0 | 0 | 0 | 1 | 1 | 1 |
| Golf | 0 | 0 | 0 | 1 | 1 | 2 | 3 | 5 | 6 |
| Pavement | 0 | 0 | 1 | 4 | 7 | 11 | 7 | 2 | 2 |
| Total (cfs) | 0 | 0 | 1 | 5 | 8 | 13 | 11 | 8 | 9 |

| Subarea Description | 12.5 hr | 12.6 hr | 12.7 hr | 12.8 hr | 13.0 hr | 13.2 hr | 13.4 hr | 13.6 hr | 13.8 hr |
|---|---|---|---|---|---|---|---|---|---|
| Forest | 1 | 1 | 1 | 1 | 0 | 0 | 0 | 0 | 0 |
| Golf | 6 | 5 | 4 | 3 | 2 | 1 | 1 | 1 | 1 |
| Pavement | 1 | 1 | 1 | 1 | 1 | 1 | 1 | 1 | 0 |
| Total (cfs) | 8 | 7 | 6 | 5 | 3 | 2 | 2 | 2 | 1 |

Return Frequency: 10 years

TR-55 TABULAR HYDROGRAPH METHOD
Type II. Distribution
(24 hr. Duration Storm)

Executed: 03-14-1995 18:48:23
Watershed file: --> C:\PONDPACK\SH3PST .MOP
Hydrograph file: --> C:\PONDPACK\SH3PS10.HYD

Stonehouse
BMP#3
Postdevelopment

Composite Hydrograph Summary (cfs)

| Subarea Description | 14.0 hr | 14.3 hr | 14.6 hr | 15.0 hr | 15.5 hr | 16.0 hr | 16.5 hr | 17.0 hr | 17.5 hr |
|---|---|---|---|---|---|---|---|---|---|
| Forest | 0 | 0 | 0 | 0 | 0 | 0 | 0 | 0 | 0 |
| Golf | 1 | 1 | 0 | 0 | 0 | 0 | 0 | 0 | 0 |
| Pavement | 0 | 0 | 0 | 0 | 0 | 0 | 0 | 0 | 0 |
| Total (cfs) | 1 | 1 | 0 | 0 | 0 | 0 | 0 | 0 | 0 |

| Subarea Description | 18.0 hr | 19.0 hr | 20.0 hr | 22.0 hr | 26.0 hr |
|---|---|---|---|---|---|
| Forest | 0 | 0 | 0 | 0 | 0 |
| Golf | 0 | 0 | 0 | 0 | 0 |
| Pavement | 0 | 0 | 0 | 0 | 0 |
| Total (cfs) | 0 | 0 | 0 | 0 | 0 |

Return Frequency: 100 years

TR-55 TABULAR HYDROGRAPH METHOD
Type II. Distribution
(24 hr. Duration Storm)

Executed: 03-14-1995 18:48:23
Watershed file: --> C:\PONDPACK\SH3PST .MOP
Hydrograph file: --> C:\PONDPACK\SH3PS100.HYD

Stonehouse
BMP#3
Postdevelopment

>>>> Input Parameters Used to Compute Hydrograph <<<<

| Subarea Description | AREA (acres) | CN | Tc (hrs) | * Tt (hrs) | Precip. (in) | Runoff (in) | Ia/p input/used |
|---|---|---|---|---|---|---|---|
| Forest | 0.60 | 70.0 | 0.50 | 0.00 | 8.10 | 4.55 | I.11 .11 |
| Golf | 2.60 | 74.0 | 0.50 | 0.00 | 8.10 | 5.02 | I.09 .10 |
| Pavement | 1.30 | 98.0 | 0.10 | 0.00 | 8.10 | 7.86 | I.01 .10 |

* Travel time from subarea outfall to composite watershed outfall point.
I -- Subarea where user specified interpolation between Ia/p tables.

Total area = 4.50 acres or 0.00703 sq.mi
Peak discharge = 20 cfs

>>>> Computer Modifications of Input Parameters <<<<<

| Subarea Description | Input Values Tc (hr) | * Tt (hr) | Rounded Values Tc (hr) | * Tt (hr) | Ia/p Interpolated (Yes/No) | Ia/p Messages |
|---|---|---|---|---|---|---|
| Forest | 0.60 | 0.00 | 0.50 | 0.00 | Yes | -- |
| Golf | 0.60 | 0.00 | 0.50 | 0.00 | No | Computed Ia/p < .1 |
| Pavement | 0.10 | 0.00 | ** | ** | No | Computed Ia/p < .1 |

* Travel time from subarea outfall to composite watershed outfall point.
** Tc & Tt are available in the hydrograph tables.

TR-55 TABULAR HYDROGRAPH METHOD
Type II. Distribution
(24 hr. Duration Storm)

Executed: 03-14-1995 18:48:23
Watershed file: --> C:\PONDPACK\SH3PST .MOP
Hydrograph file: --> C:\PONDPACK\SH3PS100.HYD

Stonehouse
BMP#3
Postdevelopment

>>>> Summary of Subarea Times to Peak <<<<

| Subarea | Peak Discharge at Composite Outfall (cfs) | Time to Peak at Composite Outfall (hrs) |
|---|---|---|
| Forest | 2 | 12.3 |
| Golf | 11 | 12.4 |
| Pavement | 16 | 12.1 |
| Composite Watershed | 20 | 12.1 |

TR-55 TABULAR HYDROGRAPH METHOD
Type II. Distribution
(24 hr. Duration Storm)

Executed: 03-14-1995 18:48:23
Watershed file: --> C:\PONDPACK\SH3PST .MOP
Hydrograph file: --> C:\PONDPACK\SH3PS100.HYD

Stonehouse
BMP#3
Postdevelopment

Composite Hydrograph Summary (cfs)

| Subarea Description | 11.0 hr | 11.3 hr | 11.6 hr | 11.9 hr | 12.0 hr | 12.1 hr | 12.2 hr | 12.3 hr | 12.4 hr |
|---|---|---|---|---|---|---|---|---|---|
| Forest | 0 | 0 | 0 | 0 | 0 | 1 | 1 | 2 | 2 |
| Golf | 0 | 0 | 1 | 1 | 2 | 3 | 6 | 10 | 11 |
| Pavement | 0 | 1 | 1 | 5 | 10 | 16 | 10 | 3 | 2 |
| Total (cfs) | 0 | 1 | 2 | 6 | 12 | 20 | 17 | 15 | 15 |

| Subarea Description | 12.5 hr | 12.6 hr | 12.7 hr | 12.8 hr | 13.0 hr | 13.2 hr | 13.4 hr | 13.6 hr | 13.8 hr |
|---|---|---|---|---|---|---|---|---|---|
| Forest | 2 | 2 | 1 | 1 | 1 | 0 | 0 | 0 | 0 |
| Golf | 10 | 8 | 6 | 5 | 3 | 2 | 2 | 1 | 1 |
| Pavement | 2 | 2 | 1 | 1 | 1 | 1 | 1 | 1 | 1 |
| Total (cfs) | 14 | 12 | 8 | 7 | 5 | 3 | 3 | 2 | 2 |

TR-55 TABULAR HYDROGRAPH METHOD
Type II. Distribution
(24 hr. Duration Storm)

Executed: 03-14-1995 18:48:23
Watershed file: --> C:\PONDPACK\SH3PST .MOP
Hydrograph file: --> C:\PONDPACK\SH3PS100.HYD

Stonehouse
BMP#3
Postdevelopment

Composite Hydrograph Summary (cfs)

| Subarea Description | 14.0 hr | 14.3 hr | 14.6 hr | 15.0 hr | 15.5 hr | 16.0 hr | 16.5 hr | 17.0 hr | 17.5 hr |
|---|---|---|---|---|---|---|---|---|---|
| Forest | 0 | 0 | 0 | 0 | 0 | 0 | 0 | 0 | 0 |
| Golf | 1 | 1 | 1 | 1 | 1 | 1 | 0 | 0 | 0 |
| Pavement | 1 | 1 | 1 | 0 | 0 | 0 | 0 | 0 | 0 |
| Total (cfs) | 2 | 2 | 2 | 1 | 1 | 1 | 0 | 0 | 0 |

| Subarea Description | 18.0 hr | 19.0 hr | 20.0 hr | 22.0 hr | 26.0 hr |
|---|---|---|---|---|---|
| Forest | 0 | 0 | 0 | 0 | 0 |
| Golf | 0 | 0 | 0 | 0 | 0 |
| Pavement | 0 | 0 | 0 | 0 | 0 |
| Total (cfs) | 0 | 0 | 0 | 0 | 0 |

# Post-development Outlet Structure Computations

POND-2 Version: 5.15
S/N: 1295100016

Stonehouse BMP #3

CALCULATED 04-23-1995 20:14:06
DISK FILE: c:\pondpack\SH3 .VOL

Planimeter scale: 1 inch = 1 ft.

| Elevation (ft) | Planimeter (sq.in.) | Area (acres) | A1+A2+sqr(A1*A2) (acres) | * Volume (acre-ft) | Volume Sum (acre-ft) |
|---|---|---|---|---|---|
| 75.50 | 7,581.00 | 0.17 | 0.00 | 0.00 | 0.00 |
| 76.00 | 8,113.00 | 0.19 | 0.54 | 0.09 | 0.09 |
| 76.50 | *I* | 0.20 | 0.58 | 0.10 | 0.19 |
| 78.00 | 10,209.00 | 0.23 | 0.63 | 0.42 | 0.51 |
| 80.00 | 12,431.00 | 0.29 | 0.78 | 0.52 | 1.03 |

*I* ---> Interpolated area from closest two planimeter readings.

* Incremental volume computed by the Conic Method for Reservoir Volumes.

Outlet Structure File: SH3 .STR

POND-2 Version: 5.15 S/N: 1295100016
Date Executed: Time Executed:

***** COMPOSITE OUTFLOW SUMMARY ****

| Elevation (ft) | Q (cfs) | Contributing Structures |
|---|---|---|
| 75.50 | 0.0 | 1 |
| 75.70 | 0.2 | 1 |
| 75.90 | 0.6 | 1 |
| 76.10 | 1.1 | 1 |
| 76.30 | 1.7 | 1 |
| 76.50 | 2.3 | 1 |
| 76.70 | 2.9 | 1 |
| 76.90 | 3.4 | 1 |
| 77.10 | 3.9 | 1 |
| 77.30 | 4.2 | 1 |
| 77.50 | 4.6 | 1 |
| 77.70 | 4.9 | 1 |
| 77.90 | 5.2 | 1 |
| 78.10 | 5.5 | 1 |
| 78.30 | 5.8 | 1 |
| 78.50 | 6.0 | 1 |
| 78.70 | 6.3 | 1 |
| 78.90 | 6.5 | 1 |
| 79.10 | 6.8 | 1 |
| 79.30 | 7.0 | 1 |
| 79.50 | 7.2 | 1 +2 |
| 79.70 | 13.4 | 1 +2 |
| 79.90 | 24.5 | 1 +2 |
| 80.00 | 31.3 | 1 +2 |

Outlet Structure File: SH3 .STR

POND-2 Version: 5.15 S/N: 1295100016
Date Executed: Time Executed:

Outlet Structure File: c:\pondpack\SH3 .STR
Planimeter Input File: c:\pondpack\SH3 .VOL
Rating Table Output File: c:\pondpack\SH3 .PND

Min. Elev.(ft) = 75.5 Max. Elev.(ft) = 80 Incr.(ft) = .2

Additional elevations (ft) to be included in table:
* * * * * * * * * * * * * * * * * * * * * * * * * * *

**********
SYSTEM CONNECTIVITY
**********

| Structure | No. | Q Table | | Q Table |
|---|---|---|---|---|
| CULVERT-CR | 1 | | -> | 1 |
| WEIR-VR | 2 | | -> | 2 |

Outflow rating table summary was stored in file:
c:\pondpack\SH3 .PND

Outlet Structure File: SH3 .STR

POND-2 Version: 5.15 S/N: 1295100016
Date Executed: Time Executed:

>>>>>> Structure No. 1 <<<<<<
(Input Data)

CULVERT-CR
Circular Culvert (With Inlet Control)

| | |
|---|---|
| E1 elev.(ft)? | 75.5 |
| E2 elev.(ft)? | 80.001 |
| Diam. (ft)? | 1.0 |
| Inv. el.(ft)? | 75.5 |
| Slope (ft/ft)? | .05 |
| T1 ratio? | |
| T2 ratio? | |
| K Coeff.? | .0098 |
| M Coeff.? | 2 |
| c Coeff.? | .0398 |
| Y Coeff.? | .67 |
| Form 1 or 2? | 1 |
| Slope factor? | -.5 |

Outlet Structure File: SH3 .STR

POND-2 Version: 5.15 S/N: 1295100016
Date Executed: Time Executed:

>>>>>> Structure No. 2 <<<<<<
(Input Data)

WEIR-VR
Weir - Vertical Rectangular

| | |
|---|---|
| E1 elev.(ft)? | 79.5 |
| E2 elev.(ft)? | 80.001 |
| Weir coefficient? | 3.33 |
| Weir elev.(ft)? | 79.5 |
| Length (ft)? | 20 |
| Contracted/Suppressed (C/S)? | S |

Outlet Structure File: SH3 .STR

POND-2 Version: 5.15 S/N: 1295100016
Date Executed: Time Executed:

Outflow Rating Table for Structure #1
CULVERT-CR Circular Culvert (With Inlet Control)

***** INLET CONTROL ASSUMED *****

| Elevation (ft) | Q (cfs) | Computation Messages | | |
|---|---|---|---|---|
| 75.50 | 0.0 | No headwater | | |
| 75.70 | 0.2 | Equ.1: HW =.2 | dc=.163 | Ac=.083 |
| 75.90 | 0.6 | Equ.1: HW =.4 | dc=.313 | Ac=.21 |
| 76.10 | 1.1 | Equ.1: HW =.6 | dc=.442 | Ac=.335 |
| 76.30 | 1.7 | Equ.1: HW =.8 | dc=.557 | Ac=.45 |
| 76.50 | 2.3 | Equ.1: HW =1.0 | dc=.654 | Ac=.544 |
| 76.70 | 2.9 | Transition: HW =1.2 | | |
| 76.90 | 3.4 | Submerged: HW =1.4 | | |
| 77.10 | 3.9 | Submerged: HW =1.6 | | |
| 77.30 | 4.2 | Submerged: HW =1.8 | | |
| 77.50 | 4.6 | Submerged: HW =2.0 | | |
| 77.70 | 4.9 | Submerged: HW =2.2 | | |
| 77.90 | 5.2 | Submerged: HW =2.4 | | |
| 78.10 | 5.5 | Submerged: HW =2.6 | | |
| 78.30 | 5.8 | Submerged: HW =2.8 | | |
| 78.50 | 6.0 | Submerged: HW =3.0 | | |
| 78.70 | 6.3 | Submerged: HW =3.2 | | |
| 78.90 | 6.5 | Submerged: HW =3.4 | | |
| 79.10 | 6.8 | Submerged: HW =3.6 | | |
| 79.30 | 7.0 | Submerged: HW =3.8 | | |
| 79.50 | 7.2 | Submerged: HW =4.0 | | |
| 79.70 | 7.4 | Submerged: HW =4.2 | | |
| 79.90 | 7.6 | Submerged: HW =4.4 | | |
| 80.00 | 7.7 | Submerged: HW =4.5 | | |

Used Unsubmerged Equ. Form (1) for elev. less than 76.63 ft
Used Submerged Equation for elevations greater than 76.78 ft
HW=Headwater (ft) dc=Critical depth (ft) Ac=Area (sq.ft) at dc

Transition flows interpolated from the following values:
E1=76.63 ft; Q1=2.75 cfs; Dc=.71 ft; E2=76.78 ft; Q2=3.14 cfs

Outlet Structure File: SH3 .STR

POND-2 Version: 5.15 S/N: 1295100016
Date Executed: Time Executed:

Outflow Rating Table for Structure #2
WEIR-VR Weir - Vertical Rectangular

***** INLET CONTROL ASSUMED *****

| Elevation (ft) | Q (cfs) | Computation Messages |
|---|---|---|
| 75.50 | 0.0 | E < Inv.El.= 79.5 |
| 75.70 | 0.0 | E < Inv.El.= 79.5 |
| 75.90 | 0.0 | E < Inv.El.= 79.5 |
| 76.10 | 0.0 | E < Inv.El.= 79.5 |
| 76.30 | 0.0 | E < Inv.El.= 79.5 |
| 76.50 | 0.0 | E < Inv.El.= 79.5 |
| 76.70 | 0.0 | E < Inv.El.= 79.5 |
| 76.90 | 0.0 | E < Inv.El.= 79.5 |
| 77.10 | 0.0 | E < Inv.El.= 79.5 |
| 77.30 | 0.0 | E < Inv.El.= 79.5 |
| 77.50 | 0.0 | E < Inv.El.= 79.5 |
| 77.70 | 0.0 | E < Inv.El.= 79.5 |
| 77.90 | 0.0 | E < Inv.El.= 79.5 |
| 78.10 | 0.0 | E < Inv.El.= 79.5 |
| 78.30 | 0.0 | E < Inv.El.= 79.5 |
| 78.50 | 0.0 | E < Inv.El.= 79.5 |
| 78.70 | 0.0 | E < Inv.El.= 79.5 |
| 78.90 | 0.0 | E < Inv.El.= 79.5 |
| 79.10 | 0.0 | E < Inv.El.= 79.5 |
| 79.30 | 0.0 | E < Inv.El.= 79.5 |
| 79.50 | 0.0 | H =0.0 |
| 79.70 | 6.0 | H =.2 |
| 79.90 | 16.8 | H =.4 |
| 80.00 | 23.5 | H =.5 |

C = 3.33 L (ft) = 20
H (ft) = Table elev. - Invert elev. ( 79.5 ft )
Q (cfs) = C * L * (H**1.5) -- Suppressed Weir

# Post-development Stormwater Routings

EXECUTED: 04-23-1995 20:17:34 2-yr Return Freq: 2 years

Inflow Hydrograph: c:\pondpack\SH3PS2 .HYD
Rating Table file: c:\pondpack\SH3 .PND

----INITIAL CONDITIONS----
Elevation = 76.50 ft
Outflow = 2.30 cfs
Storage = 0.19 ac-ft

| GIVEN POND DATA | | | INTERMEDIATE ROUTING COMPUTATIONS | |
|---|---|---|---|---|
| ELEVATION (ft) | OUTFLOW (cfs) | STORAGE (ac-ft) | 2S/t (cfs) | 2S/t + O (cfs) |
| 75.50 | 0.0 | 0.000 | 0.0 | 0.0 |
| 75.70 | 0.2 | 0.035 | 8.5 | 8.7 |
| 75.90 | 0.6 | 0.072 | 17.3 | 17.9 |
| 76.10 | 1.1 | 0.109 | 26.3 | 27.4 |
| 76.30 | 1.7 | 0.147 | 35.6 | 37.3 |
| 76.50 | 2.3 | 0.186 | 45.0 | 47.3 |
| 76.70 | 2.9 | 0.226 | 54.7 | 57.6 |
| 76.90 | 3.4 | 0.267 | 64.6 | 68.0 |
| 77.10 | 3.9 | 0.309 | 74.8 | 78.7 |
| 77.30 | 4.2 | 0.352 | 85.1 | 89.3 |
| 77.50 | 4.6 | 0.396 | 95.8 | 100.4 |
| 77.70 | 4.9 | 0.441 | 106.6 | 111.5 |
| 77.90 | 5.2 | 0.486 | 117.7 | 122.9 |
| 78.10 | 5.5 | 0.533 | 129.1 | 134.6 |
| 78.30 | 5.8 | 0.581 | 140.6 | 146.4 |
| 78.50 | 6.0 | 0.630 | 152.5 | 158.5 |
| 78.70 | 6.3 | 0.680 | 164.5 | 170.8 |
| 78.90 | 6.5 | 0.731 | 176.8 | 183.3 |
| 79.10 | 6.8 | 0.783 | 189.4 | 196.2 |
| 79.30 | 7.0 | 0.835 | 202.2 | 209.2 |
| 79.50 | 7.2 | 0.889 | 215.2 | 222.4 |
| 79.70 | 13.4 | 0.944 | 228.5 | 241.9 |
| 79.90 | 24.5 | 1.000 | 242.1 | 266.6 |
| 80.00 | 31.3 | 1.029 | 248.9 | 280.2 |

Time increment (t) = 0.100 hrs.

```
****************** SUMMARY OF ROUTING COMPUTATIONS ******************

Pond File:            c:\pondpack\SH3      .PND
Inflow Hydrograph:    c:\pondpack\SH3PS2   .HYD
Outflow Hydrograph:

Starting Pond W.S. Elevation =    76.50 ft

        ***** Summary of Peak Outflow and Peak Elevation *****

                    Peak Inflow    =     8.00 cfs
                    Peak Outflow   =     2.93 cfs
                    Peak Elevation =    76.71 ft

          ***** Summary of Approximate Peak Storage *****

              Initial Storage          =     0.19 ac-ft
              Peak Storage From Storm  =     0.04 ac-ft
                                       ---------------
              Total Storage in Pond    =     0.23 ac-ft

  >>>>> Warning, initial pond outflow > 1st inflow ordinate. <<<<<
```

Inflow Hydrograph: c:\pondpack\SH3PS10 .HYD
Rating Table file: c:\pondpack\SH3 .PND

----INITIAL CONDITIONS----
Elevation = 76.50 ft
Outflow = 2.30 cfs
Storage = 0.19 ac-ft

| GIVEN POND DATA | | | INTERMEDIATE ROUTING COMPUTATIONS | |
|---|---|---|---|---|
| ELEVATION (ft) | OUTFLOW (cfs) | STORAGE (ac-ft) | 2S/t (cfs) | 2S/t + O (cfs) |
| 75.50 | 0.0 | 0.000 | 0.0 | 0.0 |
| 75.70 | 0.2 | 0.035 | 8.5 | 8.7 |
| 75.90 | 0.6 | 0.072 | 17.3 | 17.9 |
| 76.10 | 1.1 | 0.109 | 26.3 | 27.4 |
| 76.30 | 1.7 | 0.147 | 35.6 | 37.3 |
| 76.50 | 2.3 | 0.186 | 45.0 | 47.3 |
| 76.70 | 2.9 | 0.226 | 54.7 | 57.6 |
| 76.90 | 3.4 | 0.267 | 64.6 | 68.0 |
| 77.10 | 3.9 | 0.309 | 74.8 | 78.7 |
| 77.30 | 4.2 | 0.352 | 85.1 | 89.3 |
| 77.50 | 4.6 | 0.396 | 95.8 | 100.4 |
| 77.70 | 4.9 | 0.441 | 106.6 | 111.5 |
| 77.90 | 5.2 | 0.486 | 117.7 | 122.9 |
| 78.10 | 5.5 | 0.533 | 129.1 | 134.6 |
| 78.30 | 5.8 | 0.581 | 140.6 | 146.4 |
| 78.50 | 6.0 | 0.630 | 152.5 | 158.5 |
| 78.70 | 6.3 | 0.680 | 164.5 | 170.8 |
| 78.90 | 6.5 | 0.731 | 176.8 | 183.3 |
| 79.10 | 6.8 | 0.783 | 189.4 | 196.2 |
| 79.30 | 7.0 | 0.835 | 202.2 | 209.2 |
| 79.50 | 7.2 | 0.889 | 215.2 | 222.4 |
| 79.70 | 13.4 | 0.944 | 228.5 | 241.9 |
| 79.90 | 24.5 | 1.000 | 242.1 | 266.6 |
| 80.00 | 31.3 | 1.029 | 248.9 | 280.2 |

Time increment (t) = 0.100 hrs.

********** SUMMARY OF ROUTING COMPUTATIONS **********

Pond File: c:\pondpack\SH3 .PND
Inflow Hydrograph: c:\pondpack\SH3PS10 .HYD
Outflow Hydrograph:

Starting Pond W.S. Elevation = 76.50 ft

***** Summary of Peak Outflow and Peak Elevation *****

Peak Inflow = 13.00 cfs
Peak Outflow = 5.09 cfs
Peak Elevation = 77.83 ft

***** Summary of Approximate Peak Storage *****

Initial Storage = 0.19 ac-ft
Peak Storage From Storm = 0.28 ac-ft
---
Total Storage in Pond = 0.47 ac-ft

>>>>> Warning, initial pond outflow > 1st inflow ordinate. <<<<<

Inflow Hydrograph: c:\pondpack\SH3PS100.HYD
Rating Table file: c:\pondpack\SH3 .PND

----INITIAL CONDITIONS----
Elevation = 76.50 ft
Outflow = 2.30 cfs
Storage = 0.19 ac-ft

| GIVEN POND DATA | | | INTERMEDIATE ROUTING COMPUTATIONS | |
|---|---|---|---|---|
| ELEVATION (ft) | OUTFLOW (cfs) | STORAGE (ac-ft) | 2S/t (cfs) | 2S/t + O (cfs) |
| 75.50 | 0.0 | 0.000 | 0.0 | 0.0 |
| 75.70 | 0.2 | 0.035 | 8.5 | 8.7 |
| 75.90 | 0.6 | 0.072 | 17.3 | 17.9 |
| 76.10 | 1.1 | 0.109 | 26.3 | 27.4 |
| 76.30 | 1.7 | 0.147 | 35.6 | 37.3 |
| 76.50 | 2.3 | 0.186 | 45.0 | 47.3 |
| 76.70 | 2.9 | 0.226 | 54.7 | 57.6 |
| 76.90 | 3.4 | 0.267 | 64.6 | 68.0 |
| 77.10 | 3.9 | 0.309 | 74.8 | 78.7 |
| 77.30 | 4.2 | 0.352 | 85.1 | 89.3 |
| 77.50 | 4.6 | 0.396 | 95.8 | 100.4 |
| 77.70 | 4.9 | 0.441 | 106.6 | 111.5 |
| 77.90 | 5.2 | 0.486 | 117.7 | 122.9 |
| 78.10 | 5.5 | 0.533 | 129.1 | 134.6 |
| 78.30 | 5.8 | 0.581 | 140.6 | 146.4 |
| 78.50 | 6.0 | 0.630 | 152.5 | 158.5 |
| 78.70 | 6.3 | 0.680 | 164.5 | 170.8 |
| 78.90 | 6.5 | 0.731 | 176.8 | 183.3 |
| 79.10 | 6.8 | 0.783 | 189.4 | 196.2 |
| 79.30 | 7.0 | 0.835 | 202.2 | 209.2 |
| 79.50 | 7.2 | 0.889 | 215.2 | 222.4 |
| 79.70 | 13.4 | 0.944 | 228.5 | 241.9 |
| 79.90 | 24.5 | 1.000 | 242.1 | 266.6 |
| 80.00 | 31.3 | 1.029 | 248.9 | 280.2 |

Time increment (t) = 0.100 hrs.

********** SUMMARY OF ROUTING COMPUTATIONS **********

Pond File: c:\pondpack\SH3 .PND
Inflow Hydrograph: c:\pondpack\SH3PS100.HYD
Outflow Hydrograph:

Starting Pond W.S. Elevation = 76.50 ft

***** Summary of Peak Outflow and Peak Elevation *****

Peak Inflow = 20.00 cfs
Peak Outflow = 6.81 cfs
Peak Elevation = 79.11 ft

***** Summary of Approximate Peak Storage *****

Initial Storage = 0.19 ac-ft
Peak Storage From Storm = 0.60 ac-ft
---
Total Storage in Pond = 0.78 ac-ft

>>>>> Warning, initial pond outflow > 1st inflow ordinate. <<<<<

| | | | | | |
|---|---|---|---|---|---|
| WATERSHED | WC | MAINTENANCE PLAN | No | CTRL STRUC DESC | Single Barrel |
| BMP ID NO | 050 | SITE AREA acre | | CTRL STRUC SIZE inches | 12 |
| PLAN NO | SP-92-94 | LAND USE | Res Planned Unit D | OTLT BARRL DESC | Corrug PE |
| TAX PARCEL | (04-04)(01-24) | old BMP TYP | Dry Pond w/SM | OTLT BARRL SIZE inch | 12 |
| PIN NO | 0440100024 | JCC BMP CODE | | | |
| CONSTRUCTION DATE | 1/1/1997 | POINT VALUE | 9 | EMERG SPILLWAY | No |
| PROJECT NAME | Legends at Stonehouse Golf Course | | | DESIGN HW ELEV | 79.03 |
| FACILITY LOCATION | BMP # 3 Maint Center & GC Hole 10 | | | PERM POOL ELE | 76.5 |
| CITY-STATE | Williamsburg, Va. 23188 | SVC DRAIN AREA acres | 4.5 | 2-YR OUTFLOW cfs | 2.00 |
| CURRENT OWNER | Stonehouse Development Co. LLC | | | 10-YR OUTFLOW cfs | 5.00 |
| OWNER ADDRESS | 120 Tredegar Street | | | REC DRAWING | No |
| OWNER ADDRESS 2 | 6th Floor | SERVICE AREA DESCRI | Golf Course Hole 10, Maint Bldg, Woods | | |
| CITY-STATE-ZIP CODE | Richmond, Va. 23219-4306 | IMPERV AREA acres | 1.25 | CONSTR CERTI | No |
| OWNER PHONE | | RECV STREAM | UT of Bird Swamp | | |
| MAINT AGREEMENT | Yes | EXT DET-WQ-CTRL | Yes | LAST INSP DATE | |
| | | WTR QUAL VOL acre-ft | 0.11 | INTERNAL RATING | |
| EMERG ACTION PLAN | No | CHAN PROT CTRL | No | MISC/COMMENTS | |
| | | CHAN PROT VOL acre-ft | 0 | Constructed per subsequent plan SP-34-95 Maint Area. Treats 1" rainfall. | |
| | | SW/FLOOD CONTROL | Yes | | |
| | | GEOTECH REPORT | No | | |

Get Last BMP No

Return to Menu