CERTIFICATE OF AUTHENTICITY

THIS IS TO CERTIFY THAT THE FOLLOWING ELECTRONIC RECORDS ARE TRUE AND ACCURATE REPRODUCTIONS OF THE ORIGINAL RECORDS OF JAMES CITY COUNTY GENERAL SERVICES DEPARTMENT- STORMWATER DIVISION; WERE SCANNED IN THE REGULAR COURSE OF BUSINESS PURSUANT TO GUIDELINES ESTABLISHED BY THE LIBRARY OF VIRGINIA AND ARCHIVES; AND HAVE BEEN VERIFIED IN THE CUSTODY OF THE INDIVIDUAL LISTED BELOW.

BMP NUMBER: **WC076**

DATE VERIFIED: **October 15, 2012**

QUALITY ASSURANCE TECHNICIAN: **Leah Hardenbergh**

Leah Hardenbergh

LOCATION: WILLIAMSBURG, VIRGINIA

Stormwater Division

MEMORANDUM

DATE: March 12, 2010

TO: Michael J. Gillis, Virginia Correctional Enterprises Document Management Services

FROM: Jo Anna Ripley, Stormwater

PO: 270712

RE: Files Approved for Scanning

General File ID or BMP ID: WC076

PIN: 0520700001A

Subdivision, Tract, Business or Owner Name (if known): Stonehouse

Property Description: Richardsons Mill Common Area Section 2

Site Address:

(For internal use only)	**Box**	22		**Drawer:**	9
Agreements: (in file as of scan date)	**Y**		**Book or Doc#:**	020031122 990026872	**Page:**

Comments

COPY

COUNTY OF JAMES CITY, VIRGINIA

DECLARATION OF COVENANTS

INSPECTION/MAINTENANCE OF DRAINAGE SYSTEM

THIS DECLARATION, made this ~~6TH~~ 11TH JHB day of DECEMBER, 2002, between STONEHOUSE DEVELOPMENT COMPANY, LLC, and all successors in interest, ("COVENANTOR(S),") owner(s) of the following property: STONEHOUSE DEVELOPMENT AREA ONE, PHASE I, SECTION VII-A, "RICHARDSON'S MILL" SECTION 2 project name, Document No. 990026872, Deed Book _____, Page No. _____; Instrument No. _____, and the County of James City, Virginia ("COUNTY.")

WITNESSETH:

We, the COVENANTOR(S), with full authority to execute deeds, mortgages, other covenants, and all rights, titles and interests in the property described above, do hereby covenant with the COUNTY as follows:

1. The COVENANTOR(S) shall provide maintenance for the drainage system including any runoff control facilities, conveyance systems and associated easements, hereinafter referred to as the "SYSTEM," located on and serving the above-described property to ensure that the SYSTEM is and remains in proper working condition in accordance with approved design standards, and with the law and applicable executive regulations. The SYSTEM shall not include any elements located within any Virginia Department of Transportation rights-of-way.

2. If necessary, the COVENANTOR(S) shall levy regular or special assessments against all present or subsequent owners of property served by the SYSTEM to ensure that the SYSTEM is properly maintained.

3. The COVENANTOR(S) shall provide and maintain perpetual access from public right-of-ways to the SYSTEM for the COUNTY, its agent and its contractor.

4. The COVENANTOR(S) shall grant the COUNTY, its agent and its contractor a right of entry to the SYSTEM for the purpose of inspecting, operating, installing, constructing, reconstructing, maintaining or repairing the SYSTEM.

5. If, after reasonable notice by the COUNTY, the COVENANTOR(S) shall fail to maintain the SYSTEM in accordance with the approved design standards and with the law and applicable executive regulations, the COUNTY may perform all necessary repair or maintenance work, and the COUNTY may assess the COVENANTOR(S) and/or all property served by the SYSTEM for the cost of the work and any applicable penalties.

Instrument # 020031122
Recorded Dec. 26, 2002

6. The COVENANTOR(S) shall indemnify and save the COUNTY harmless from any and all claims for damages to persons or property arising from the installation, construction, maintenance, repair, operation or use of the SYSTEM.

7. The COVENANTOR(s) shall promptly notify the COUNTY when the COVENANTOR(S) legally transfers any of the COVENANTOR(S)' responsibilities for the SYSTEM. The COVENANTOR(S)' shall supply the COUNTY with a copy of any document of transfer, executed by both parties.

8. The covenants contained herein shall run with the land and shall bind the COVENANTOR(S) and the COVENANTOR(S)' heirs, executors, administrators, successors and assignees, and shall bind all present and subsequent owners of property served by the SYSTEM.

9. This COVENANT shall be recorded in the County Land Records.

IN WITNESS WHEREOF, the COVENANTOR(S) have executed this DECLARATION OF COVENANTS as of the date first above written.

COVENANTOR(S)

_____

Print Name/Title _____

ATTEST:

_____

COVENANTOR(S)

_____

Print Name/Title LAWRENCE O. MYERS

TREASURER

ATTEST:

_____

COMMONWEALTH OF VIRGINIA
~~CITY~~/COUNTY OF JAMES CITY

I hereby certify that on this 11th day of DECEMBER, 2002, before the subscribed, a Notary Public of the State of Virginia, and for the ~~City~~/County of JAMES CITY, aforesaid personally appeared LAWRENCE O. ~~MEY~~ MYERS MJ and did acknowledge the aforegoing instrument to be their Act.

IN WITNESS WHEREOF, I have hereunto set my hand and official seal this 11th day of DECEMBER, 2002.

Moonah Jangu
Notary Public

My Commission expires: MARCH 31, 2006

Approved as to form:

Leo P Rogers
County Attorney

This Declaration of Covenants prepared by:

JAMES H. BENNETT
(Print Name)

VICE PRESIDENT, DLAC
(Title)

120 TREDEGAR STREET
(Address)

RICHMOND VA 23219
(City) (State) (Zip)

drainage.pre

James City County, Virginia
Environmental Division

Stormwater Management / BMP Facilities
Record Drawing and Construction Certification Forms

(Note: In accordance with the requirements of the Chesapeake Bay Preservation Ordinance, Chapter 23, Section 23-10(4), BMP's shall be designed and constructed in accordance with the manual entitled James City County Guidelines for Design and Construction of Stormwater Management BMP's. Erosion and sediment control policy and approved plans generally require that at the completion of the project and prior to release of surety, an "as-built" plan prepared by a registered Professional Engineer or Certified Land Surveyor must be provided for the drainage system for the project, including any Best Management Practice (BMP) facilities. In addition, for BMP facilities involving the construction of an impounding structure or dam embankment, certification is required by a Professional Engineer who has inspected the structure during its construction. Currently there are over 20 water quality type BMP's accepted by the County.)

Section 1 – Site Information:

Project Name: Stonehouse - Section VII-A (Richardson's Mill Section 2)
Structure/BMP Name: BMP #7.4
Project Location: Stonehouse - Richardson's Mill
BMP Location: CA-46 (Between lots 4 & 5 on Sawyer Way)
County Plan No.: JCC Case No. S - 64 - 02

Project Type:
- ☒ Residential
- ☐ Commercial
- ☐ Institutional
- ☐ Public
- ☐ Other
- ☐ Business
- ☐ Office
- ☐ Industrial
- ☐ Roadway

Tax Map/Parcel No.: (6-4) (1-1)
BMP ID Code (if known): WC076
Zoning District: PUD-R
Land Use: Residential
Site Area (sf or acres): 52.05

Brief Description of Stormwater Management/BMP Facility: Timber Structure

Nearest Visible Landmark to SWM/BMP Facility: Open Space on Sawyer Way

Nearest Vertical Ground Control (if known):
☒ JCC Geodetic Ground Control ☐ USGS ☐ Temporary ☐ Arbitrary ☐ Other
Station Number or Name: 303
Datum or Reference Elevation: NGVD 1929
Control Description: NAD 27
Control Location from Subject Facility: 3.5 miles south

Section 2 – Stormwater Management / BMP Facility Construction Information:

PreConstruction Meeting Held for Construction of SWM/BMP Facility: ☒ Yes ☐ No ☐ Unknown
Approx. Construction Start Date for SWM/BMP Facility: January 2003
Facility Monitored by County Representative during Construction: ☐ Yes ☐ No ☐ Unknown
Name of Site Work Contractor Who Constructed Facility: George Nice & Sons, Inc.
Name of Professional Firm Who Routinely Monitored Construction: _____
Date of Completion for SWM/BMP Facility: _____
Date of Record Drawing/Construction Certification Submittal: 08/16/04

(Note: Record Drawing and Construction Certifications are required within thirty (30) days of the completion of Stormwater Management and/or BMP facility construction. Record Drawings and Construction Certifications must be reviewed and approved by the James City County Environmental Division prior to final inspection, acceptance and bond or surety release.)

Section 3 – Owner / Designer / Contractor Information:

Owner/Developer: *(Note: Site Owner or Applicant responsible for development of the project.)*

Name: Stonehouse Development Company
Mailing Address: 9701 Mill Pond Run
Toano, VA 23168
Business Phone: 757-234-5000 Fax:757-234-5091
Contact Person: Jerry Moore Title:President

Design Professional: *(Note: Professional Engineer or Certified Land Surveyor responsible for the design and preparation of plans and specifications for the Stormwater Management / BMP facility.)*

Firm Name: AES Consulting Engineers
Mailing Address: 5248 Olde Towne Road, Suite 1
Williamsburg, VA 23188
Business Phone: 757-253-0040
Fax: 757-220.8994
Responsible Plan Preparer: Marc Bennett
Title: Senior Project Manager
Plan Name: Stonehouse - Development Area One, Phase 1- Section VII-A, "Richardson's Mill" - Section 1
Firm's Project No. 9028-08
Plan Date: June 26, 2002
Sheet No.'s Applicable to SWM/BMP Facility: 9 / 14 / ____ / ____ / ____

BMP Contractor: *(Note: Site Work Contractor directly responsible for construction of the Stormwater Management / BMP facility.)*

Name: George Nice & Sons, Inc.
Mailing Address: 143 Skimino Road
Williamsburg, VA 23188-2229
Business Phone: (757) 565-2885
Fax: (757) 565-1526
Contact Person: Ray Nice
Site Foreman/Supervisor: _____
Specialty Subcontractors & Purpose (for BMP Construction Only):

Section 4 – Professional Certifications:

Certifying Professionals: *(Note: A Registered Professional Engineer of Certified Land Surveyor is responsible for preparation of a Record Drawing, sometimes referred to as an As-Built plan, for the drainage system for the project including any Stormwater Management/BMP Facilities. A Registered Professional Engineer is responsible for the inspection, monitoring and certification of Stormwater Management / BMP facilities during its construction.)*

Record Drawing and Construction Certifications for Stormwater Management / BMP Facilities

Record Drawing Certification

Firm Name: AES Consulting Engineers
Mailing Address: 5248 Olde Towne Road, Suite 1
Williamsburg, VA 23188
Business Phone: 757-253-0040
Fax: 757-220-8994

Name: Marc Bennett
Title: Senior Project Manager

Signature: Van Marc Bennett
Date: 6/13/06

I hereby certify to the best of my knowledge and belief that this record drawing represents the actual condition of the Stormwater Management / BMP facility. The facility appears to conform with the provisions of the approved design plan, specifications and stormwater management plan, except as specifically noted.

Construction Certification

Firm Name: _____
Mailing Address: _____
_____
Business Phone: _____
Fax: _____

Name: _____
Title: _____

Signature: _____
Date: _____

I hereby certify to the best of my knowledge and belief that this Stormwater Management / BMP facility was monitored and constructed in accordance with the provisions of the approved design plan, specifications and stormwater management plan, except as specifically noted.

COMMONWEALTH OF VIRGINIA
VAN MARC BENNETT
6/13/06
No. 26628
PROFESSIONAL ENGINEER

Van Marc Bennett (Seal)

Virginia Registered Professional Engineer
Or Certified Land Surveyor

_____ (Seal)

Virginia Registered
Professional Engineer

#7.4
WC076
5-64-02

James City County, Virginia
Environmental Division

Stormwater Management / BMP Facilities Record Drawing and Construction Certification

Standard Forms & Instructions

Contents — Page

Record Drawing and Construction Certification Forms

Section 1 – Site Information		1
Section 2 – Construction Information		2
Section 3 – Owner / Designer / Contractor Information		2
Section 4 – Professional Certifications		3
Section 5 – Certification Requirements and Instructions		4

Record Drawing Checklist

I.	Methods and Presentation	(Required for All Facilities)	6
II.	Minimum Standards	(Required for All Facilities)	6
III.	Group A – Wet Ponds		8
IV.	Group B – Wetlands		9
V.	Group C – Infiltration Practices		10
VI.	Group D – Filtering Systems		11
VII.	Group E – Open Channel Systems		12
VIII.	Group F – Extended Dry Detention		13
IX.	Group G – Open Spaces		14
X.	Storm Drainage Systems	(Associated with BMP's Only)	15
XII.	Other Systems		15
XIII.	References		16

Issue Date
February 1, 2001

GET Solutions, Inc.

Geotechnical · Environmental · Testing

April 22, 2005

To: **AES Consulting Engineers**
5248 Olde Towne Road
Suite 1
Williamsburg, VA 23188

Attn: Ms. Victoria A. Bains

WC 075 7.3
076 7.4
077 7.2
078 7.1

Re: **Richardson's Mill Timber Walls (Sections 1 & 2)**
Stone House Development
James City County, Virginia
G E T Project No. VB02-302T

Dear Ms. Bains:

The purpose of this correspondence is to indicate that **G E T Solutions, Inc.** performed QA/QC inspections during site and earthwork construction activities at Richardson's Mill subdivision Sections 1 & 2, of the Stonehouse development in James City County, Virginia. As part of our inspection services, the construction of the 4 BMP basins was monitored and associated field-testing was performed in accordance with the plans and specifications.

In this respect, it is determined that these 4 basins were constructed in general conformance with the plans and specifications. Additionally, it is our opinion that these basins should hold water, considering the relatively low-permeability characteristics of the fill soils used at these sites, and the design and installation of the timber detention structures.

We appreciate the opportunity to be of continuous service to you on this project, and trust that you will call this office with any questions that you may have.

Respectfully Submitted,
G E T Solutions, Inc.

Camille A. Kattan, P.E.
Principal Engineer
VA Reg. # 018045

COMMONWEALTH OF VIRGINIA
Camille A. Kattan
No.018045
4/22/05
PROFESSIONAL ENGINEER

Copies: (3) Client

204 Grayson Road, Suite B • Virginia Beach, VA 23462 • Phone: (757) 518-1703 • Fax (757) 518-1704
info@getsolutionsinc.com

No.	DATE	REVISION / COMMENT / NOTE	BY
7	8/8/08	BMP CONVERSION	VAB
6	10/8/07	MODIFICATION TO PRIMARY SPILLWAY	VAB
5	8/16/04	RECORD DRAWING	VMB
4	4/8/03	NO CHANGE THIS SHEET	VMB
3	2/5/03	FIELD CHANGE (NO CHANGE THIS SHEET)	VMB
2	11/8/02	REVISED PER JCC COMMENTS	VMB
1	9/20/02	REVISED PER JCC COMMENTS DATED 8/28/02	VMB

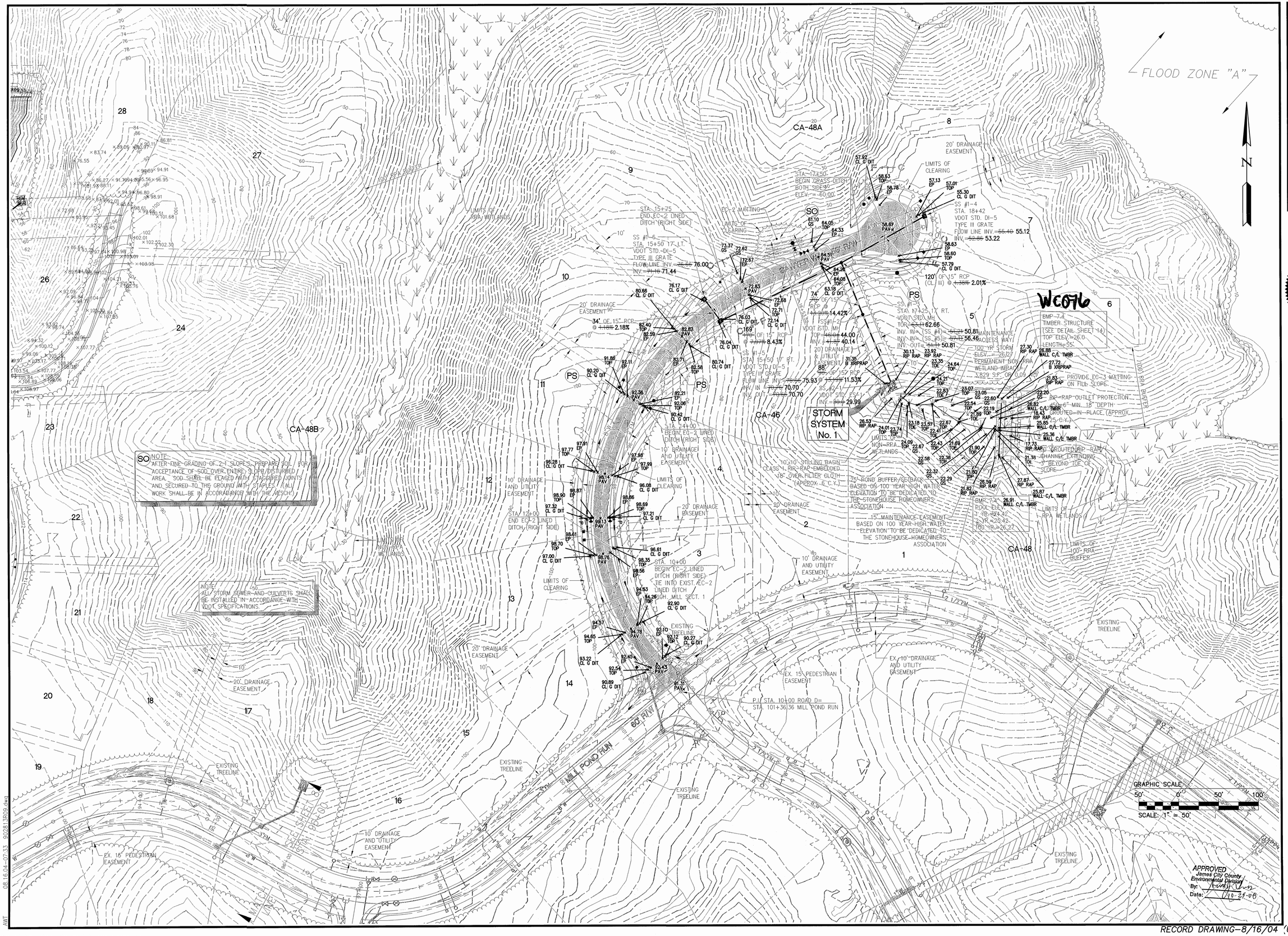

5248 Olde Towne Road, Suite 1
Williamsburg, Virginia 23188
(757) 253-0040
Fax (757) 220-8994
AES CONSULTING ENGINEERS

COMMONWEALTH OF VIRGINIA
VAN MARC BEANET
No. 02080
2/5/03
PROFESSIONAL ENGINEER

BMP MODIFICATION PLAN
SECT.VII-A "RICHARDSON'S MILL" SECT. 2
AT STONEHOUSE FOR
STONEHOUSE DEVELOPMENT COMPANY, L.L.C.

STONEHOUSE DISTRICT — JAMES CITY COUNTY — VIRGINIA

Designed VMB/RDS	Drawn AWT
Scale 1"=50'	Date 6/26/02
Project No. 9028-13	
Drawing No. 9	

S:\Jobs\9028\13-Mill Pond Sub. Sect. 2-ASB\dwg\Cad - ASB\BUILT\BMP Modifications\9028\13R09.dwg, 8/8/2008 2:35:29 PM, bobby.sanders

08.16.04-07.33 9028\13R09.dwg

AWT

WC076_STONEHOUSE_SEC_7A_RICHARDSON_MILL_SEC_2_TIMBER_WALL - 011

SEDIMENT BASIN	TOP WALL (1)	BOTTOM ELEV. (2)	CLEAN OUT ELEV. (3)	WET POOL (4)	DRAINAGE AREA (AC.)
~~1~~	~~36.00~~	~~23.00~~	~~28.10~~	~~29.80~~	~~3.72~~
2	~~26.00~~ 26.87	15.00	19.80	21.60	3.41

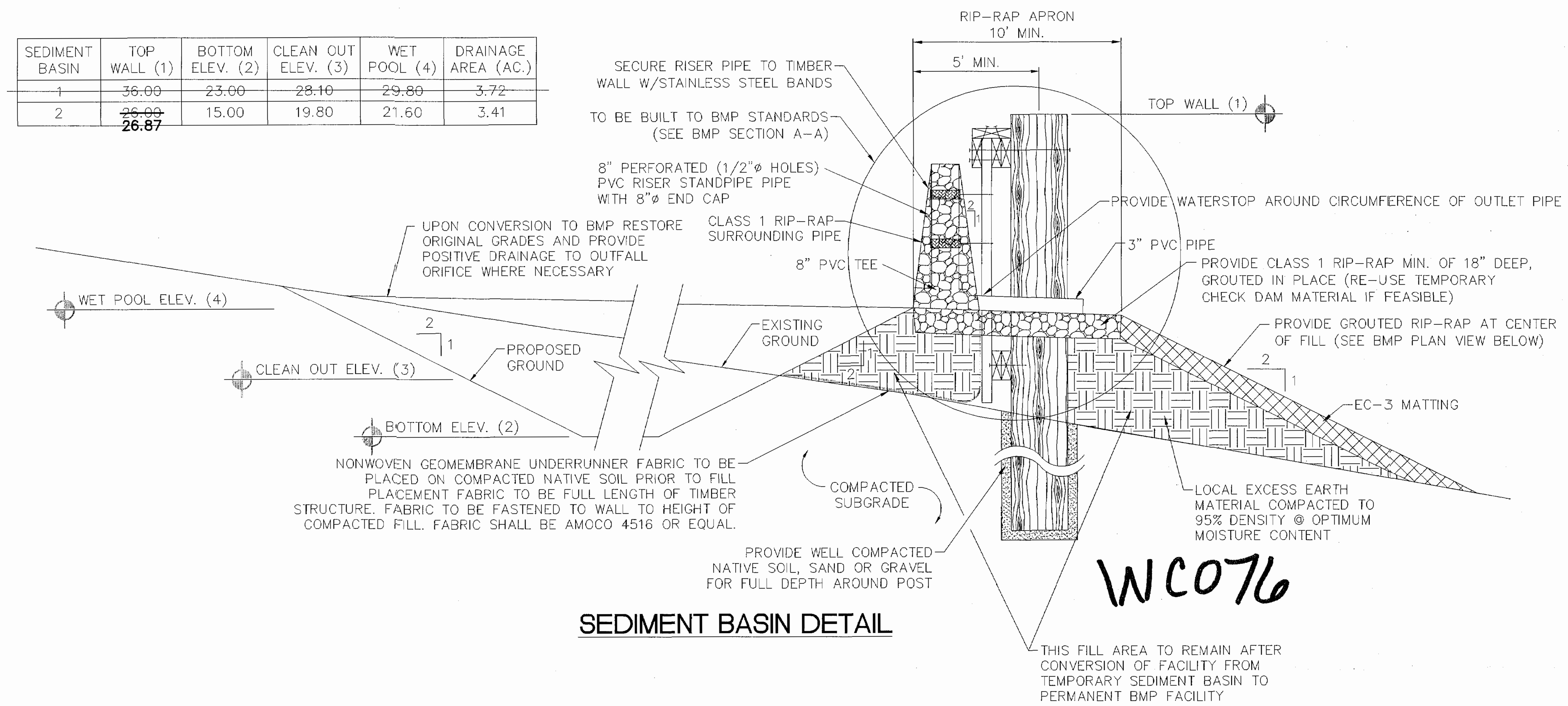

SEDIMENT BASIN DETAIL

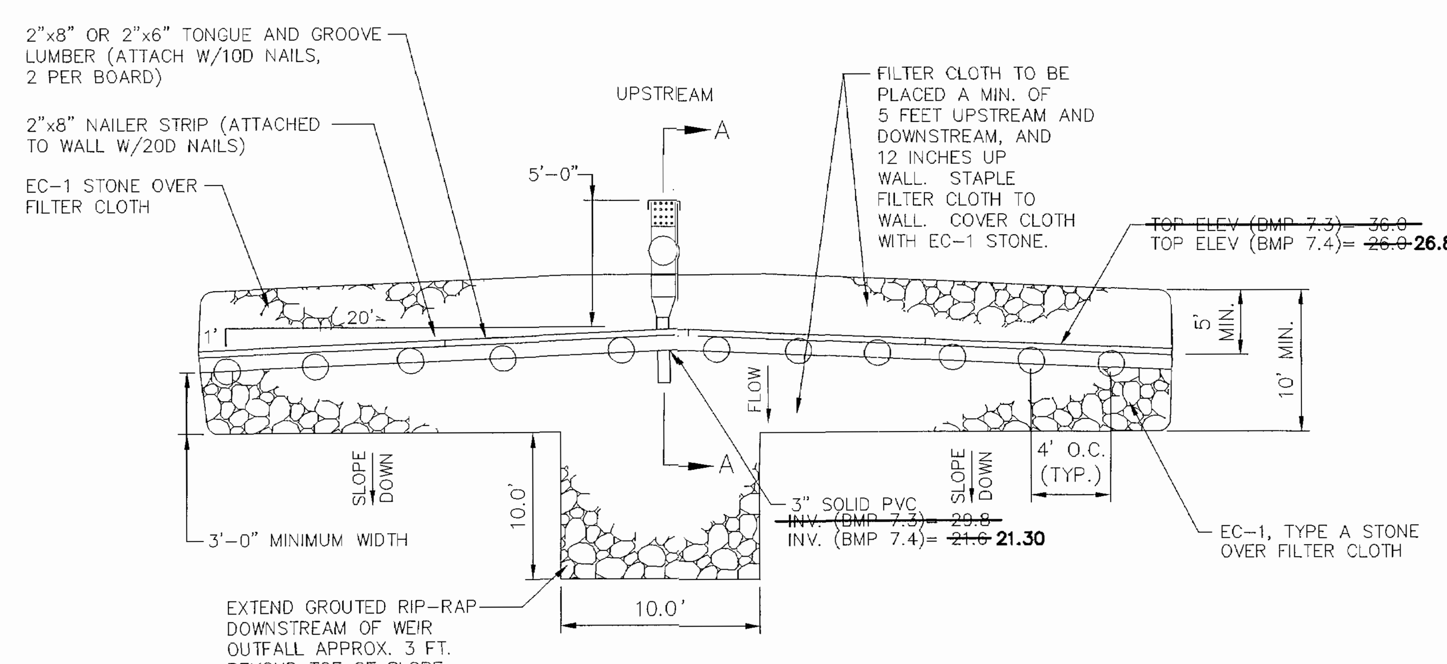

NOTE:
CONSTRUCT TIMBER STRUCTURE TO BE CONVEX UPSTREAM (AS SHOWN)

PLAN VIEW
SCALE: NONE

WC076

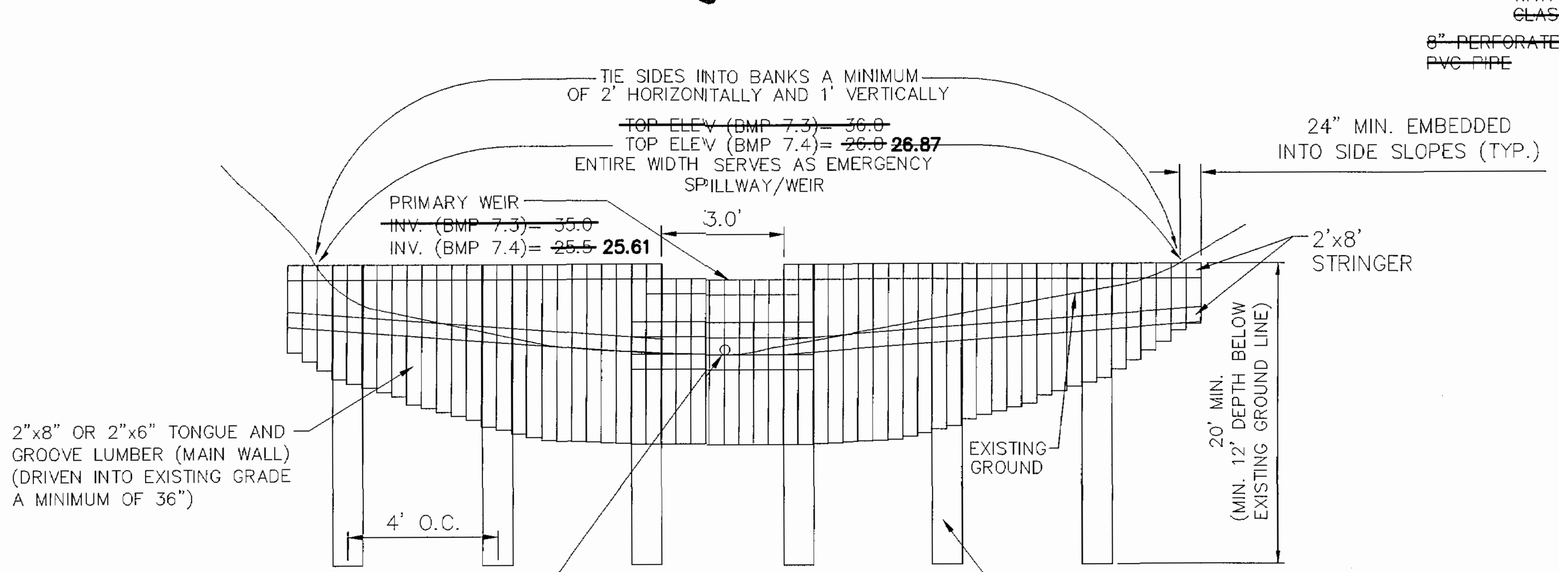

UPSTREAM ELEVATION
SCALE: NONE

	~~BMP 7.3:~~	BMP 7.4:
1 YEAR STORM ELEVATION	~~33.94~~	24.42
2 YEAR STORM ELEVATION	~~35.12~~	25.42
10 YEAR STORM ELEVATION	~~35.66~~	25.85
100 YEAR STORM ELEVATION	~~36.23~~	26.27

NOTE:
ALL LUMBER TO BE PRESSURE TREATED. ALL FASTENERS TO BE GALVANIZED.

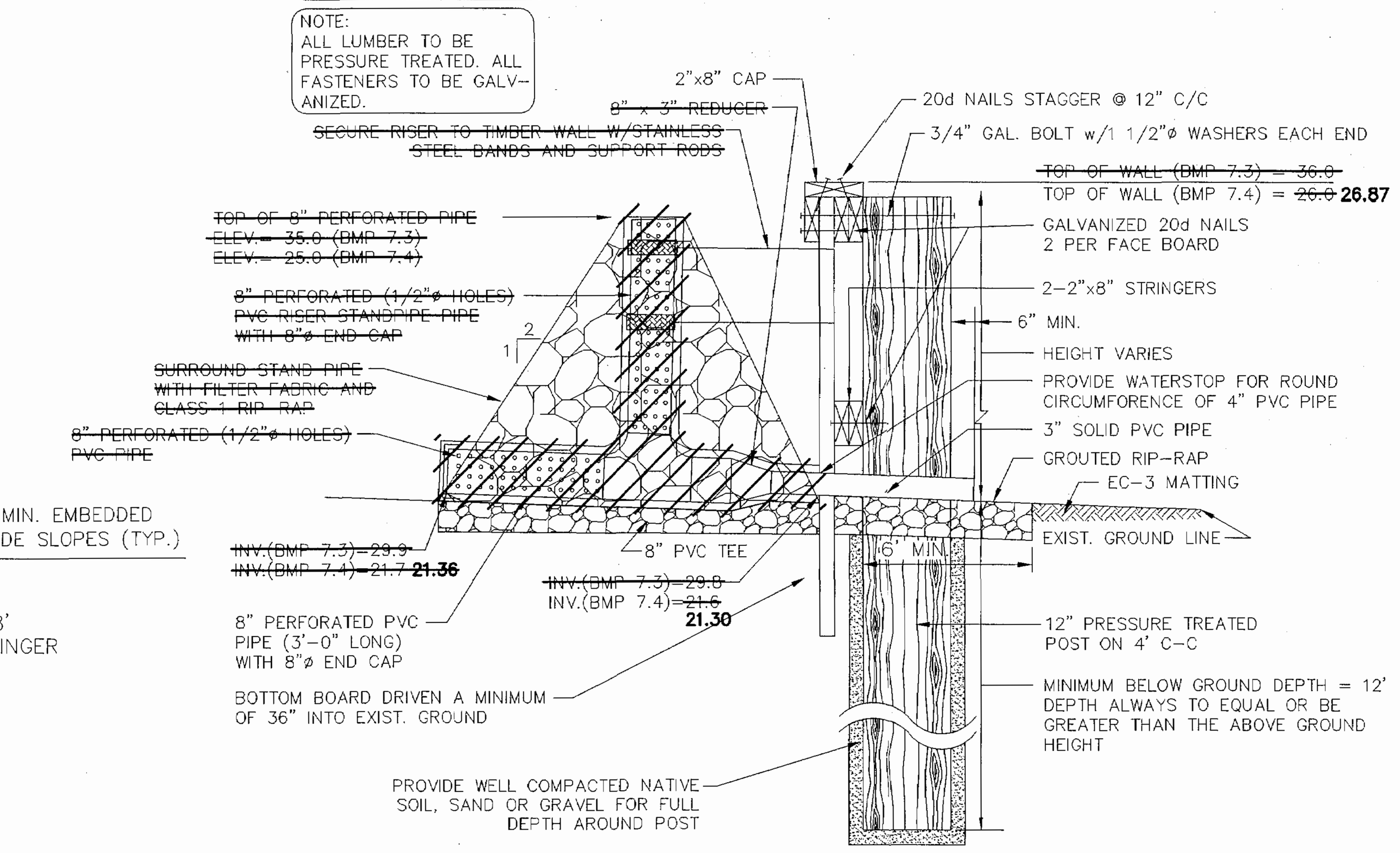

NOTE:
ALL PVC PIPING USED SHOULD BE SCH. 40.

SECTION A-A
NOT TO SCALE

PRESSURE TREATED WOOD DRY DETENTION STRUCTURE WCO7.4

GENERAL NOTES FOR CONSTRUCTION OF STORMWATER BASINS

1. THE CONTRACTOR SHALL PROVIDE ALL WORK AND MATERIALS NEEDED TO CONSTRUCT THE STORMWATER BASIN, STORMWATER MANAGEMENT PONDS, BEST MANAGEMENT PRACTICES, SEDIMENT BASINS AND SEDIMENT TRAPS. THE WORK SHALL INCLUDE ALL LABOR, MATERIALS, EQUIPMENT AND MATERIALS NEEDED FOR THE COMPLETION OF GRADING AND EARTHWORK ASSOCIATED WITH THE CONSTRUCTION.

2. THE OWNER SHALL CONSULT AND PROVIDE FOR THE SERVICES OF A GEOTECHNICAL ENGINEER. THE GEOTECHNICAL ENGINEER SHALL PROVIDE TEST RESULTS ON PLACED FILL MATERIALS, IDENTIFYING SOIL CLASSIFICATION, PERMEABILITY, PLASTICITY INDEX, AND COMPACTION. ALL TESTS SHALL BE IN CONFORMANCE WITH ASTM STANDARDS. THE COST OF THE SERVICES OF THE GEOTECHNICAL ENGINEER SHALL BE THE RESPONSIBILITY OF THE OWNER. SATISFACTORY GEOTECHNICAL RESULTS ARE NEEDED PRIOR TO FINAL APPROVAL.

3. ALL INSPECTIONS REQUIRED FOR THE WORK SHALL BE PERFORMED BY A GEOTECHNICAL ENGINEER AT THE EXPENSE OF THE OWNER.

4. ON-SITE EXCAVATED MATERIAL, IF DETERMINED SUITABLE FOR USE AS FILL MATERIAL BY A GEOTECHNICAL ENGINEER, MAY BE USED FOR CONSTRUCTION. SHOULD ADDITIONAL MATERIAL BE REQUIRED, THE CONTRACTOR SHALL IDENTIFY THE NEED FOR MATERIAL TO THE OWNER, AS ADDITIONAL BORROW MATERIAL MAY BE AVAILABLE ON THE STONEHOUSE PROPERTY. ALL EXCAVATED MATERIAL DETERMINED BY THE GEOTECHNICAL ENGINEER TO BE UNSUITABLE SHALL BE DISPOSED OF PROPERLY AT THE CONTRACTOR'S EXPENSE. ALL EXCAVATED MATERIAL NOT REQUIRED FOR BACKFILLING SHALL EITHER BE DEPOSITED ON SITE AND SPREAD BY THE CONTRACTOR, OR SHALL BE DEPOSITED IN AN AREA ON THE STONEHOUSE PROPERTY AS DIRECTED BY THE OWNER. THE CONTRACTOR SHALL PROVIDE PROPER STABILIZATION, AND EROSION AND SEDIMENT CONTROL MEASURES NEEDED TO CONTROL AS PER THE VESCH THIRD EDITION.

5. RECORD DRAWINGS (AS-BUILTS) OF THE STORMWATER MANAGEMENT FACILITY PROPOSED ON THESE DRAWINGS MUST BE SUPPLIED TO THE JAMES CITY COUNTY ENVIRONMENTAL DIVISION WITHIN 30 DAYS OF COMPLETION OF THE SWM/BMP FACILITY. A CONSTRUCTION CERTIFICATE OF THE SWM/BMP SHALL BE SUPPLIED WITH THE RECORD DRAWINGS. RECORD DRAWINGS AND SWM/BMP CERTIFICATION SHALL BE SUBMITTED, REVIEWED AND APPROVED BY THE STAFF OF THE JAMES CITY COUNTY ENVIRONMENTAL DIVISION PRIOR TO THE RELEASE OF POSTED BONDS AND/OR SURETIES.

STORMWATER MANAGEMENT/ BMP FACILITY MAINTENANCE PLAN FOR BMP 7.3 AND 7.4

PROPER MAINTENANCE OF THIS FACILITY IS ENCOURAGED TO PREVENT THE INTRODUCTION OF DEBRIS AND SEDIMENT IN TO THE FACILITY, SPILLWAY(S) AND DOWNSTREAM WATERWAYS. FOLLOWING INSTALLATION OF THE FACILITY AND ESTABLISHMENT OF VEGETATION IN DISTURBED AREAS, INSPECTIONS FOR SEDIMENT BUILDUPS WILL BE PERFORMED AT LEAST QUARTERLY. IT IS ANTICIPATED THAT UNDER NORMAL CONDITIONS, SEDIMENT REMOVAL FROM THE FACILITY WILL BE REQUIRED ONCE EVERY 10 YEARS. IF OTHER CONSTRUCTION OR RELATED ACTIVITIES ARE PERFORMED ON UPSLOPE PARCELS, ADEQUATE PROTECTION SHOULD BE PROVIDED AND INSPECTIONS PERFORMED AT LEAST ONCE WEEKLY.

A DESIGNATED REPRESENTATIVE OF THE OWNER WILL INSPECT THE SWM STRUCTURE AFTER EACH SIGNIFICANT RAINFALL EVENT OR THE FOLLOWING WORKING DAY IF A WEEKEND OR HOLIDAY OCCURS. A SIGNIFICANT RAINFALL FOR THIS STRUCTURE IS DEFINED AS ONE (1) INCH OR MORE OF GAUGED RAINFALL WITHIN A 24 HOUR PERIOD. ONCE PER YEAR, A REPRESENTATIVE OF THE COUNTY MAY JOINTLY INSPECT THE STRUCTURE. APPROPRIATE ACTION, PERFORMED AT THE COST OF THE OWNER, WILL BE TAKEN TO ENSURE APPROPRIATE MAINTENANCE. WHERE STRUCTURES ARE TO BE MAINTAINED JOINTLY, ALLOCATION OF MAINTENANCE COSTS WILL BE IN ACCORDANCE WITH THE TERMS ESTABLISHED IN MAINTENANCE AGREEMENTS. KEYS TO LOCKED ACCESS POINTS SHALL BE MADE AVAILABLE TO COUNTY INSPECTION PERSONNEL UPON REQUEST.

INSPECTION AND MAINTENANCE OF THE FACILITY WILL CONSIST OF THE FOLLOWING ADDITIONAL MEASURES:

1. THE INSPECTION FOR SEDIMENT BUILDUP WILL BE PERFORMED BY VISUAL INSPECTION AND A PHYSICAL DETERMINATION OF SEDIMENT DEPTH WITHIN THE STORAGE AREA. IF THE DEPTH OF SEDIMENT REACHES THE DEPTH OF 1.0 ft. ABOVE THE BOTTOM OF THE LOW FLOW ORIFICE IN THE TIMBER WALL, REMOVAL IS REQUIRED USING A RUBBER-WHEELED BACKHOE. AT THIS TIME, THE STILLING BASINS LOCATED AT THE OUTFALLS OF THE STORM SEWER PIPE SYSTEMS SHALL ALSO BE INSPECTED. IF THE DEPTH OF SEDIMENT WITHIN THE STILLING BASINS REACHES A DEPTH OF 18" ABOVE THE BOTTOM OF THE BASIN OR 6" ABOVE THE INVERT OF THE OUTFALL PIPE, REMOVAL OF THE MATERIAL IS REQUIRED. AT THE SAME TIME, OR AT LEAST ONCE PER YEAR, CLEAN THE OUTLET PIPES WITHIN THE TIMBER WALL DETENTION BASINS OF ACCUMULATED SEDIMENTS. DISPOSE OF SEDIMENTS REMOVED FROM THE FACILITY AT AN ACCEPTABLE DISPOSAL AREA.

2. PERFORM QUARTERLY INSPECTIONS OF THE TIMBER STRUCTURE AND SPILLWAY DEVICES FOR THE OBSERVANCE OF COLLECTED DEBRIS. IMMEDIATELY REMOVE ANY DEBRIS TO MAINTAIN THE INTEGRITY OF THE STRUCTURE AND PROVIDE AN ATTRACTIVE APPEARANCE.

3. PERFORM YEARLY STRUCTURAL INSPECTIONS OF THE FACILITY FOR DAMAGE. STRUCTURAL INSPECTION SHALL BE PERFORMED ON THE TIMBER WALL, ORIFICE/ WEIR(S), OUTLET DEVICE AND STONE APRONS. IF DAMAGE IS EVIDENT, FURTHER INVESTIGATION BY A PROFESSIONAL ENGINEER MAY BE REQUIRED TO ASSESS THE INTEGRITY OF THE STRUCTURE.

4. PERFORM QUARTERLY INSPECTIONS OF THE GRADED SIDE SLOPES OF THE DETENTION FACILITY FOR SIGNS OF ANIMAL/ RODENT BORROWS OR SLOPE EROSION. IMMEDIATELY PERFORM NECESSARY REPAIRS, REFILLING OR RESEEDING AS APPROPRIATE.

5. RECORD KEEPING. THE OWNER OR DESIGNATED REPRESENTATIVE SHALL KEEP REASONABLE, ACCURATE WRITTEN RECORDS OR INSPECTIONS PERFORMED FOR THE STRUCTURE. RECORDS SHALL DOCUMENT OR REPAIRS PERFORMED. COPIES SHALL BE PROVIDED TO THE COUNTY UPON REQUEST.

6. THE FACILITY SHALL NOT BE MODIFIED IN ANY WAY WITHOUT PRIOR CONSENT/ APPROVAL OF THE COUNTY.

CONVERSION OF SEDIMENT BASINS INTO BMP FACILITIES

BMP FACILITIES WILL INITIALLY BE CONSTRUCTED AS SEDIMENT BASINS REQUIRING EXCAVATION TO PROVIDE ADEQUATE STORAGE. ONCE J.C.C. ENVIRONMENTAL DIVISION GIVES CONCURRENCE TO REMOVE THE SEDIMENT BASIN FACILITIES, EXCAVATED MATERIAL SHOULD BE REPLACED. ORIGINAL GRADES SHOULD BE RESTORED AND POSITIVE DRAINAGE SHALL BE PROVIDED TO OUTFALL ORIFICE AS NECESSARY. ANY EXCESS EARTH OR SEDIMENT SHALL BE REMOVED AND DISPOSED OF BY CONTRACTOR. ALL DISTURBED AREA SHALL BE SEEDED AND STABILIZED.

NOTE: SEE SHEET 14A FOR NEW BMP 7.3 & SEDIMENT BASIN 1 INFORMATION.

No.	DATE	REVISION / COMMENT / NOTE	BY
7	8/8/08	BMP CONVERSION	VAB
6	10/8/07	MODIFICATION TO PRIMARY SPILLWAY	VAB
5	8/16/04	RECORD DRAWING	VMB
4	4/8/03	NO CHANGE THIS SHEET	VMB
3	2/5/03	FIELD CHANGE (NO CHANGE THIS SHEET)	VMB
2	11/8/02	REVISED PER JCC COMMENTS	VMB
1	9/20/02	REVISED PER JCC COMMENTS DATED 8/28/02	VMB

COMMONWEALTH OF VIRGINIA — PROFESSIONAL ENGINEER — 2/5/03

ES CONSULTING ENGINEERS
5248 Olde Towne Road, Suite 1
Williamsburg, Virginia 23188
(757) 253-0040
Fax (757) 220-8994

BMP MODIFICATION PLAN
SECT.VI-A "RICHARDSON'S MILL" SECT. 2
AT STONEHOUSE FOR
STONEHOUSE DEVELOPMENT COMPANY, L.L.C.
STONEHOUSE DISTRICT — JAMES CITY COUNTY — VIRGINIA

Designed	Drawn
VMB/RDS	AWT
Scale	Date
NONE	6/26/02
Project No.	
9028-13	
Drawing No.	
14	

RECORD DRAWING-8/16/04 (UPDATED 8/8/08)

S:\Jobs\9028\13-Mill Pond Sub. Sect. 2-ASB\dwg\Cad - ASBUILT\BMP Modifications\902813R14.dwg, 8/8/2008 2:34:48 PM, bobby.sanders
08.16.04-07.33\902813R14.dwg
AWT

WC076_STONEHOUSE_SEC_7A_RICHARDSON_MILL_SEC_2_TIMBER_WALL - 012

No.	DATE	REVISION / COMMENT / NOTE	BY
4	8/16/04	RECORD DRAWING	VMB
3	2/5/03	FIELD CHANGE (NO CHANGE THIS SHEET)	VMB
2	11/8/02	REVISED PER JCC COMMENTS	VMB
1	9/20/02	REVISED PER JCC COMMENTS DATED 8/28/02	VMB

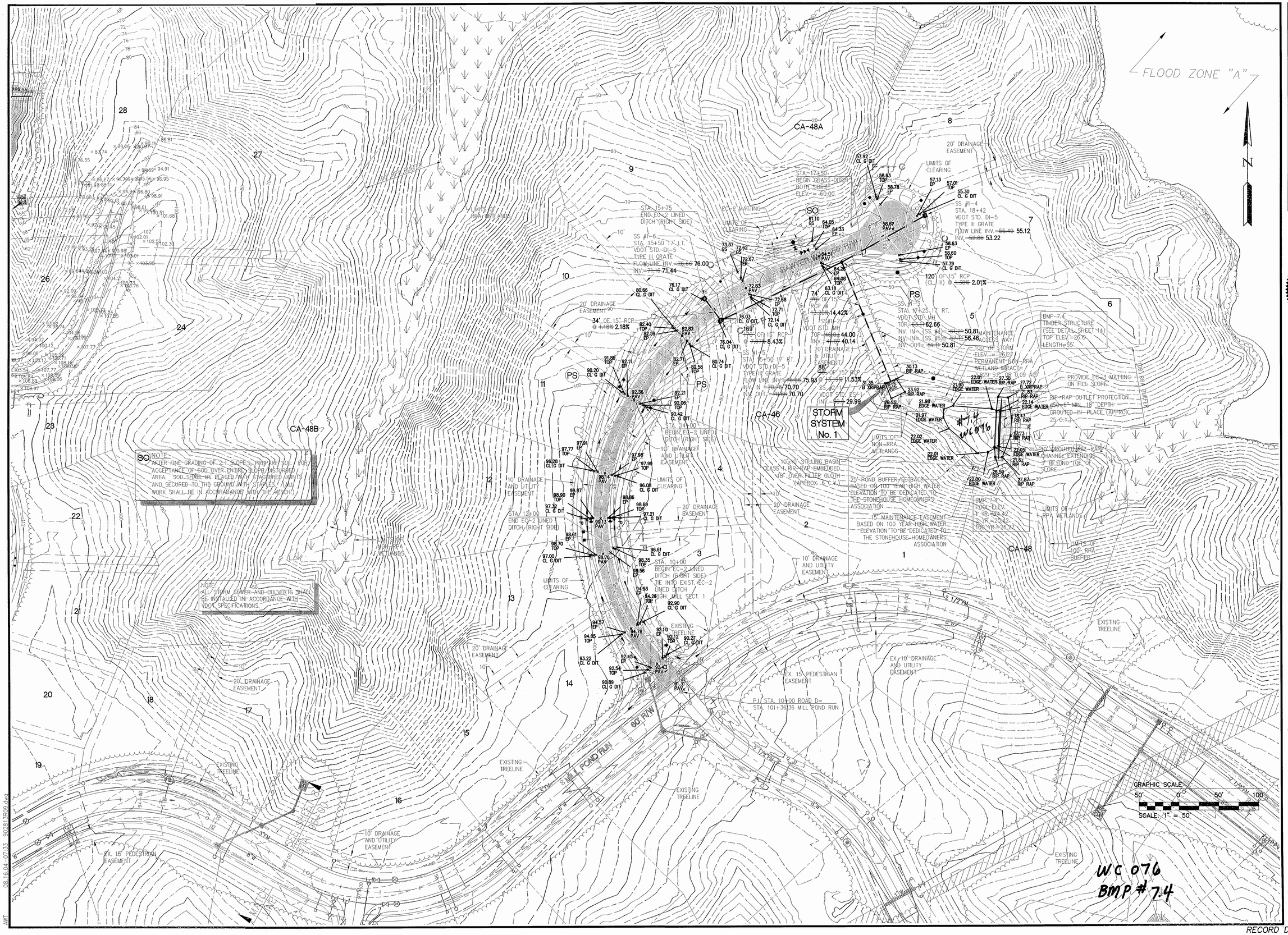

5248 Olde Towne Road, Suite 1
Williamsburg, Virginia 23188
(757) 253-0040
Fax (757) 220-8994
CONSULTING ENGINEERS

DRAINAGE AND GRADING PLAN - SAWYER WAY
SECT.VII-A "RICHARDSON'S MILL" SECT. 2
AT STONEHOUSE FOR
STONEHOUSE DEVELOPMENT COMPANY, L.L.C.

STONEHOUSE DISTRICT — JAMES CITY COUNTY — VIRGINIA

Designed VMB/RDS	Drawn AWT
Scale 1"=50'	Date 6/26/02
Project No. 9028-13	
Drawing No. 9	

08 16 04 07:33 9028\13\9.dwg AWT
WC076_STONEHOUSE_SEC_7A_RICHARDSON_MILL_SEC_2_TIMBER_WALL - 013

SEDIMENT BASIN	TOP WALL (1)	BOTTOM ELEV. (2)	CLEAN OUT ELEV. (3)	WET POOL (4)	DRAINAGE AREA (AC.)
1	36.00 (struck)	23.00 (struck)	28.10 (struck)	29.80 (struck)	3.72 (struck)
2	26.00 (struck) 26.87	15.00	19.80	21.60	3.41

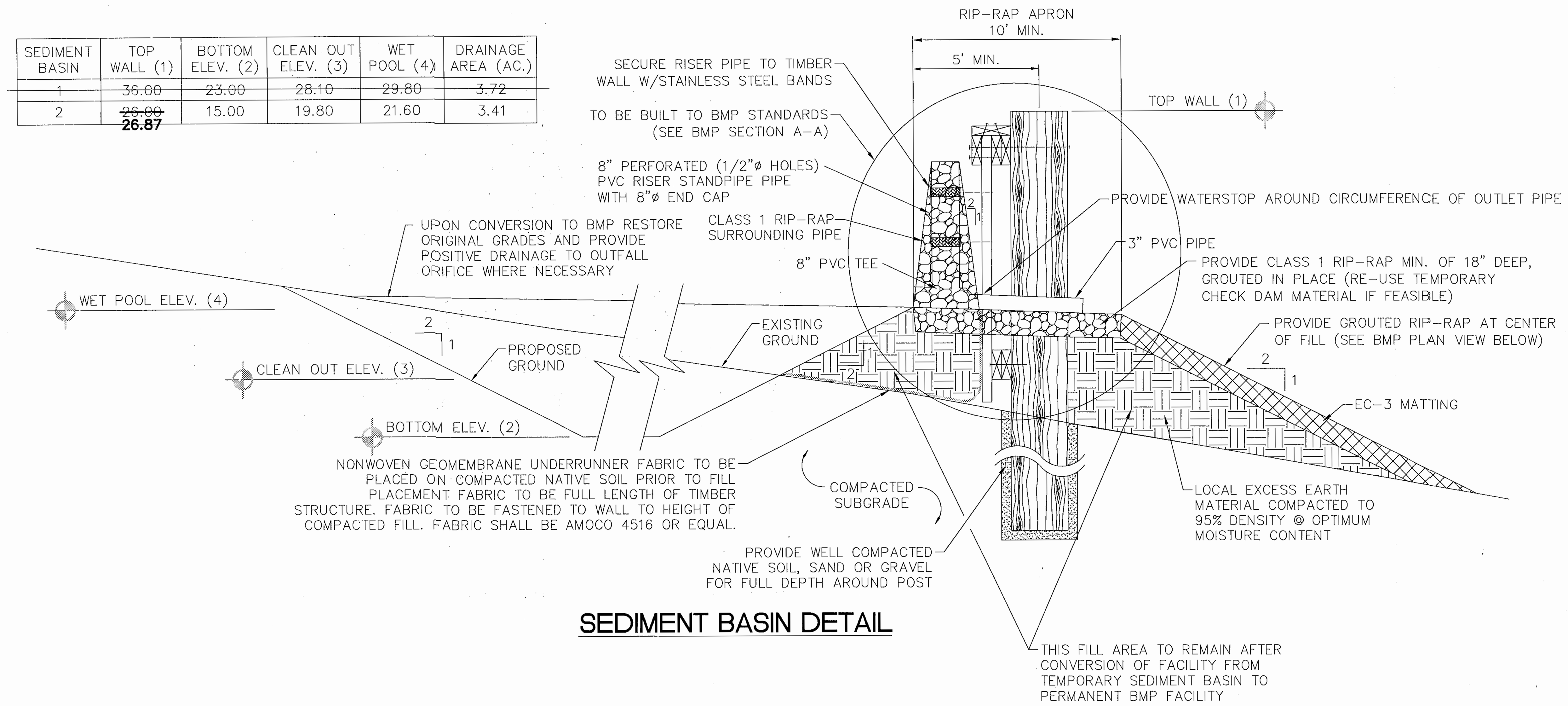

SEDIMENT BASIN DETAIL

GENERAL NOTES FOR CONSTRUCTION OF STORMWATER BASINS

1. THE CONTRACTOR SHALL PROVIDE ALL WORK AND MATERIALS NEEDED TO CONSTRUCT THE STORMWATER BASIN, STORMWATER MANAGEMENT PONDS, BEST MANAGEMENT PRACTICES, SEDIMENT BASINS AND SEDIMENT TRAPS. THE WORK SHALL INCLUDE ALL LABOR, MATERIALS, EQUIPMENT AND MATERIALS NEEDED FOR THE COMPLETION OF GRADING AND EARTHWORK ASSOCIATED WITH THE CONSTRUCTION.

2. THE OWNER SHALL CONSULT AND PROVIDE FOR THE SERVICES OF A GEOTECHNICAL ENGINEER. THE GEOTECHNICAL ENGINEER SHALL PROVIDE TEST RESULTS ON PLACED FILL MATERIALS, IDENTIFYING SOIL CLASSIFICATION, PERMEABILITY, PLASTICITY INDEX, AND COMPACTION. ALL TESTS SHALL BE IN CONFORMANCE WITH ASTM STANDARDS. THE COST OF THE SERVICES OF THE GEOTECHNICAL ENGINEER SHALL BE THE RESPONSIBILITY OF THE OWNER. SATISFACTORY GEOTECHNICAL RESULTS ARE NEEDED PRIOR TO FINAL APPROVAL.

3. ALL INSPECTIONS REQUIRED FOR THE WORK SHALL BE PERFORMED BY A GEOTECHNICAL ENGINEER AT THE EXPENSE OF THE OWNER.

4. ON-SITE EXCAVATED MATERIAL, IF DETERMINED SUITABLE FOR USE AS FILL MATERIAL BY A GEOTECHNICAL ENGINEER, MAY BE USED FOR CONSTRUCTION. SHOULD ADDITIONAL MATERIAL BE REQUIRED, THE CONTRACTOR SHALL IDENTIFY THE NEED FOR MATERIAL TO THE OWNER, AS ADDITIONAL BORROW MATERIAL MAY BE AVAILABLE ON THE STONEHOUSE PROPERTY. ALL EXCAVATED MATERIAL DETERMINED BY THE GEOTECHNICAL ENGINEER TO BE UNSUITABLE SHALL BE DISPOSED OF PROPERLY AT THE CONTRACTOR'S EXPENSE. ALL EXCAVATED MATERIAL NOT REQUIRED FOR BACKFILLING SHALL EITHER BE DEPOSITED ON SITE AND SPREAD BY THE CONTRACTOR, OR SHALL BE DEPOSITED IN AN AREA ON THE STONEHOUSE PROPERTY AS DIRECTED BY THE OWNER. THE CONTRACTOR SHALL PROVIDE PROPER STABILIZATION, AND EROSION AND SEDIMENT CONTROL MEASURES NEEDED TO CONTROL AS PER THE VESCH THIRD EDITION.

5. RECORD DRAWINGS (AS-BUILTS) OF THE STORMWATER MANAGEMENT FACILITY PROPOSED ON THESE DRAWINGS MUST BE SUPPLIED TO THE JAMES CITY COUNTY ENVIRONMENTAL DIVISION WITHIN 30 DAYS OF COMPLETION OF THE SWM/BMP FACILITY. A CONSTRUCTION CERTIFICATE OF THE SWM/BMP SHALL BE SUPPLIED WITH THE RECORD DRAWINGS. RECORD DRAWINGS AND SWM/BMP CERTIFICATION SHALL BE SUBMITTED, REVIEWED AND APPROVED BY THE STAFF OF THE JAMES CITY COUNTY ENVIRONMENTAL DIVISION PRIOR TO THE RELEASE OF POSTED BONDS AND/OR SURETIES.

STORMWATER MANAGEMENT/ BMP FACILITY MAINTENANCE PLAN FOR BMP 7.3 AND 7.4

PROPER MAINTENANCE OF THIS FACILITY IS ENCOURAGED TO PREVENT THE INTRODUCTION OF DEBRIS AND SEDIMENT IN TO THE FACILITY, SPILLWAY(S) AND DOWNSTREAM WATERWAYS. FOLLOWING INSTALLATION OF THE FACILITY AND ESTABLISHMENT OF VEGETATION IN DISTURBED AREAS, INSPECTIONS FOR SEDIMENT BUILDUPS WILL BE PERFORMED AT LEAST QUARTERLY. IT IS ANTICIPATED THAT UNDER NORMAL CONDITIONS, SEDIMENT REMOVAL FROM THE FACILITY WILL BE REQUIRED ONCE EVERY 10 YEARS. IF OTHER CONSTRUCTION OR RELATED ACTIVITIES ARE PERFORMED ON UPSLOPE PARCELS, ADEQUATE PROTECTION SHOULD BE PROVIDED AND INSPECTIONS PERFORMED AT LEAST ONCE WEEKLY.

A DESIGNATED REPRESENTATIVE OF THE OWNER WILL INSPECT THE SWM STRUCTURE AFTER EACH SIGNIFICANT RAINFALL EVENT OR THE FOLLOWING WORKING DAY IF A WEEKEND OR HOLIDAY OCCURS. A SIGNIFICANT RAINFALL FOR THIS STRUCTURE IS DEFINED AS ONE (1) INCH OR MORE OF GAUGED RAINFALL WITHIN A 24 HOUR PERIOD. ONCE PER YEAR, A REPRESENTATIVE OF THE COUNTY MAY JOINTLY INSPECT THE STRUCTURE. APPROPRIATE ACTION, PERFORMED AT THE COST OF THE OWNER, WILL BE TAKEN TO ENSURE APPROPRIATE MAINTENANCE. WHERE STRUCTURES ARE TO BE MAINTAINED JOINTLY, ALLOCATION OF MAINTENANCE COSTS WILL BE IN ACCORDANCE WITH THE TERMS ESTABLISHED IN MAINTENANCE AGREEMENTS. KEYS TO LOCKED ACCESS POINTS SHALL BE MADE AVAILABLE TO COUNTY INSPECTION PERSONNEL UPON REQUEST.

INSPECTION AND MAINTENANCE OF THE FACILITY WILL CONSIST OF THE FOLLOWING ADDITIONAL MEASURES:

1. THE INSPECTION FOR SEDIMENT BUILDUP WILL BE PERFORMED BY VISUAL INSPECTION AND A PHYSICAL DETERMINATION OF SEDIMENT DEPTH WITHIN THE STORAGE AREA. IF THE DEPTH OF SEDIMENT REACHES THE DEPTH OF 1.0 ft. ABOVE THE BOTTOM OF THE LOW FLOW ORIFICE IN THE TIMBER WALL, REMOVAL IS REQUIRED USING A RUBBER-WHEELED BACKHOE. AT THIS TIME, THE STILLING BASINS LOCATED AT THE OUTFALLS OF THE STORM SEWER PIPE SYSTEMS SHALL ALSO BE INSPECTED. IF THE DEPTH OF SEDIMENT WITHIN THE STILLING BASINS REACHES A DEPTH OF 18" ABOVE THE BOTTOM OF THE BASIN OR 6" ABOVE THE INVERT OF THE OUTFALL PIPE, REMOVAL OF THE MATERIAL IS REQUIRED. AT THE SAME TIME, OR AT LEAST ONCE PER YEAR, CLEAN THE OUTLET PIPES WITHIN THE TIMBER WALL DETENTION BASINS OF ACCUMULATED SEDIMENTS. DISPOSE OF SEDIMENTS REMOVED FROM THE FACILITY AT AN ACCEPTABLE DISPOSAL AREA.

2. PERFORM QUARTERLY INSPECTIONS OF THE TIMBER STRUCTURE AND SPILLWAY DEVICES FOR THE OBSERVANCE OF COLLECTED DEBRIS. IMMEDIATELY REMOVE ANY DEBRIS TO MAINTAIN THE INTEGRITY OF THE STRUCTURE AND PROVIDE AN ATTRACTIVE APPEARANCE.

3. PERFORM YEARLY STRUCTURAL INSPECTIONS OF THE FACILITY FOR DAMAGE. STRUCTURAL INSPECTION SHALL BE PERFORMED ON THE TIMBER WALL, ORIFICE/ WEIR(S), OUTLET DEVICE AND STONE APRONS. IF DAMAGE IS EVIDENT, FURTHER INVESTIGATION BY A PROFESSIONAL ENGINEER MAY BE REQUIRED TO ASSESS THE INTEGRITY OF THE STRUCTURE.

4. PERFORM QUARTERLY INSPECTIONS OF THE GRADED SIDE SLOPES OF THE DETENTION FACILITY FOR SIGNS OF ANIMAL/ RODENT BORROWS OR SLOPE EROSION. IMMEDIATELY PERFORM NECESSARY REPAIRS, REFILLING OR RESEEDING AS APPROPRIATE.

5. RECORD KEEPING. THE OWNER OR DESIGNATED REPRESENTATIVE SHALL KEEP REASONABLE, ACCURATE WRITTEN RECORDS OR INSPECTIONS PERFORMED FOR THE STRUCTURE. RECORDS SHALL DOCUMENT OR REPAIRS PERFORMED. COPIES SHALL BE PROVIDED TO THE COUNTY UPON REQUEST.

6. THE FACILITY SHALL NOT BE MODIFIED IN ANY WAY WITHOUT PRIOR CONSENT/ APPROVAL OF THE COUNTY.

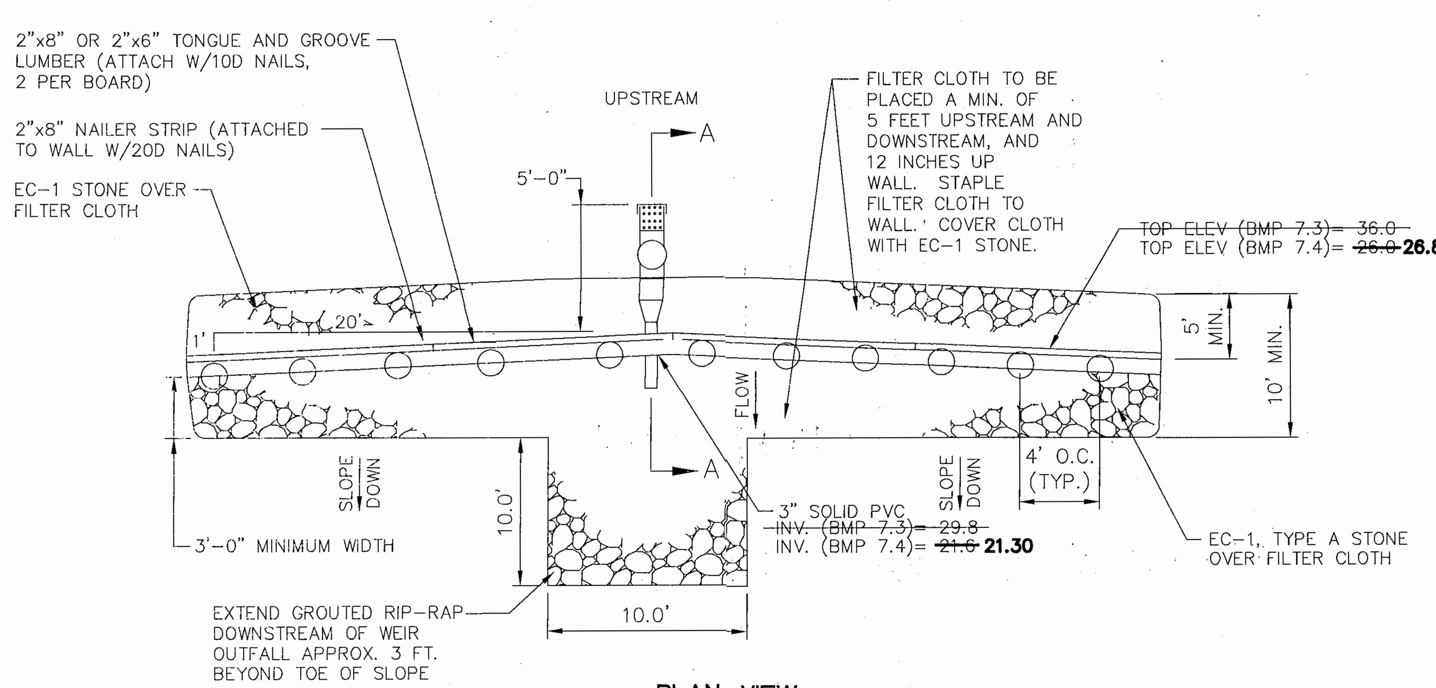

NOTE: CONSTRUCT TIMBER STRUCTURE TO BE CONVEX UPSTREAM (AS SHOWN)

PLAN VIEW
SCALE: NONE

	BMP 7.3 (struck)	BMP 7.4
1 YEAR STORM ELEVATION	33.94 (struck)	24.42
2 YEAR STORM ELEVATION	35.12 (struck)	25.42
10 YEAR STORM ELEVATION	35.66 (struck)	25.85
100 YEAR STORM ELEVATION	36.23 (struck)	26.27

NOTE: ALL LUMBER TO BE PRESSURE TREATED. ALL FASTENERS TO BE GALVANIZED.

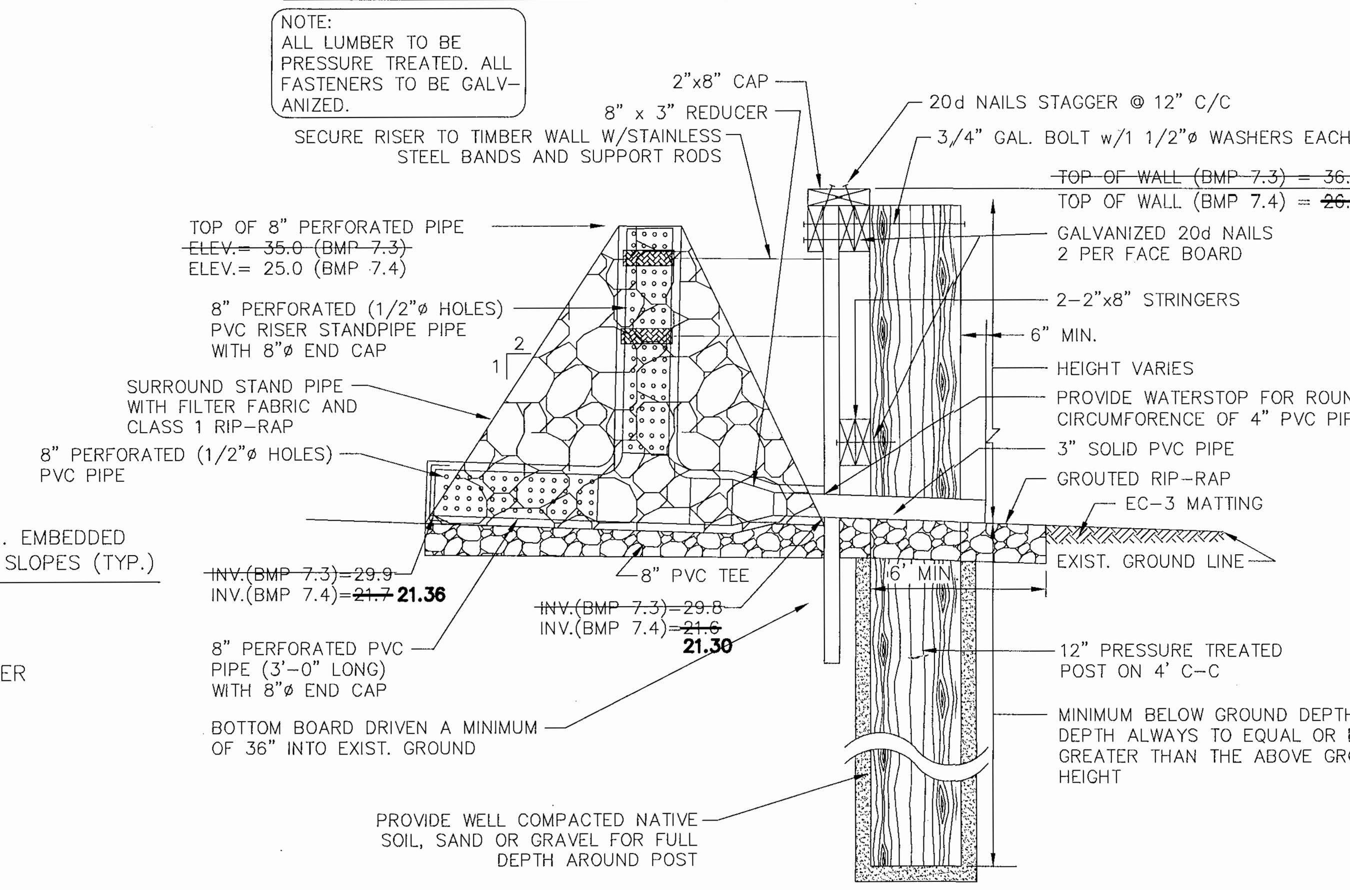

NOTE: ALL PVC PIPING USED SHOULD BE SCH. 40.

SECTION A-A
NOT TO SCALE

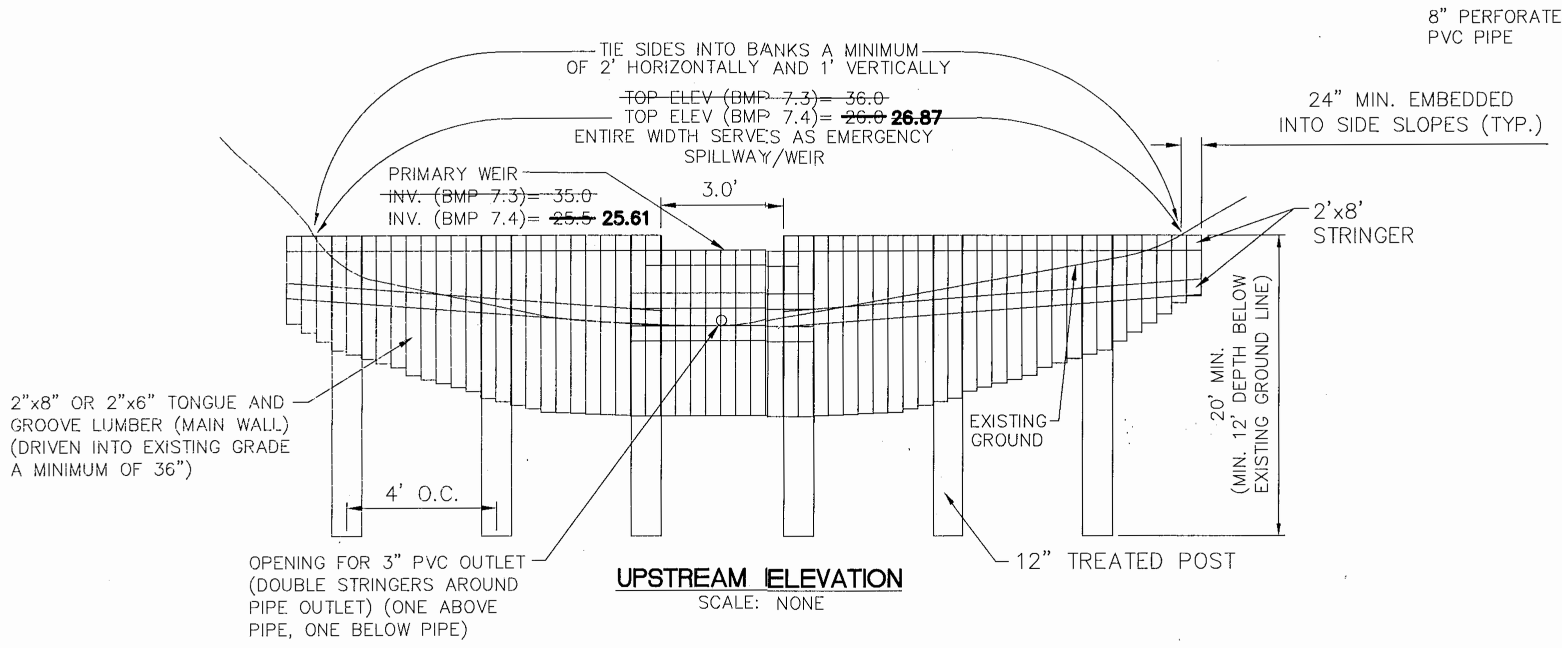

UPSTREAM ELEVATION
SCALE: NONE

PRESSURE TREATED WOOD DRY DETENTION STRUCTURE

CONVERSION OF SEDIMENT BASINS INTO BMP FACILITIES

BMP FACILITIES WILL INITIALLY BE CONSTRUCTED AS SEDIMENT BASINS REQUIRING EXCAVATION TO PROVIDE ADEQUATE STORAGE. ONCE J.C.C. ENVIRONMENTAL DIVISION GIVES CONCURRENCE TO REMOVE THE SEDIMENT BASIN FACILITIES, EXCAVATED MATERIAL SHOULD BE REPLACED. ORIGINAL GRADES SHOULD BE RESTORED AND POSITIVE DRAINAGE SHALL BE PROVIDED TO OUTFALL ORIFICE AS NECESSARY. ANY EXCESS EARTH OR SEDIMENT SHALL BE REMOVED AND DISPOSED OF BY CONTRACTOR. ALL DISTURBED AREA SHALL BE SEEDED AND STABILIZED.

NOTE: SEE SHEET 14A FOR NEW BMP 7.3 & SEDIMENT BASIN 1 INFORMATION.

No.	DATE	REVISION / COMMENT / NOTE	BY
4	8/16/04	RECORD DRAWING	VMB
3	4/8/03	FIELD CHANGE (NO CHANGE THIS SHEET)	VMB
2	11/8/02	REVISED PER JCC COMMENTS	VMB
1	9/20/02	REVISED PER JCC COMMENTS DATED 8/28/02	VMB

COMMONWEALTH OF VIRGINIA
VAN MARC BENNETT
PROFESSIONAL ENGINEER
2/5/03

AES CONSULTING ENGINEERS
5248 Olde Towne Road, Suite 1
Williamsburg, Virginia 23188
(757) 253-0040
Fax (757) 220-8994

STORMWATER MANAGEMENT DETAILS
SECT.VII-A "RICHARDSON'S MILL" SECT. 2
AT STONEHOUSE FOR
STONEHOUSE DEVELOPMENT COMPANY, L.L.C.
STONEHOUSE DISTRICT — JAMES CITY COUNTY — VIRGINIA

Designed	Drawn
VMB/RDS	AWT
Scale	Date
NONE	6/26/02
Project No.	
9028-13	
Drawing No.	
14	

RECORD DRAWING-8/16/04

08.16.04-07:33902813R14.dwg

AWT

WC076_STONEHOUSE_SEC_7A_RICHARDSON_MILL_SEC_2_TIMBER_WALL - 014

Mill Pond Section 2

SEP 2002
RECEIVED
PLANNING DEPARTMENT

for

★ FULL COMPS PACKAGE LOCATED IN WC075 FILES!

STONEHOUSE, VIRGINIA

Live where the future is wide open.

James City County, Virginia

Calculations
For
James City County Environmental Division

Prepared for

Stonehouse Development Company, L.L.C.

5-64-02

WC 075
WC 076

Prepared by

AES CONSULTING ENGINEERS

AES Consulting Engineers
5248 Olde Towne Road, Suite 1
Williamsburg, VA 23188
(757) 253-0040 Fax: (757) 220-8994
http://www.aesva.com

STORMWATER MANAGEMENT NARRATIVE

RICHARDSON'S MILL SUBDIVISION, SECTION 2

June 19, 2002 **(Revised September 4, 2002)**

AES Project Number 9028-13

Project Description

This narrative is provided to augment the stormwater management design for the Richardson's Mill, Section 2 Subdivision of the Stonehouse Project. This project site is zoned PUD-R, and is part of parcel (6-4) (1-1) on James City County Tax Maps. The total project area is 52.3 acres.

The Best Management Practices (BMPs) scheduled for this site provide runoff quantity and stream channel protection only. Through a combination of natural open space, constructed BMPs and the existing Richardson's Millpond lake (WC 059), the Stonehouse project is able to meet the performance standards outlined for the protection of the Chesapeake Bay.

Site work for this project is to consist of construction of secondary roadways (with roadside ditches), storm sewers, water system, sanitary sewer systems, and drainage improvements to support a single-family residential development. Runoff from the proposed development is discharged two primary ways: Accumulated with storm sewers to adequate channels; and un-concentrated overland runoff. All runoff from this site subsequently discharges to Richardson's Mill Pond, an existing multi-acre lake.

Project Location

The Mill Pond Subdivision is located in the northern parts of James City County, in the Stonehouse District. Section 2 of Mill Pond is located on the northern side of an existing gravel wood road running from the current terminus of Mill Pond Run to Mill Pond Park, a small recreation area on a peninsula of land formed by Richardson's Millpond.

Environmentally Sensitive Areas

Environmentally sensitive areas are designated on the Environmental Inventory Plan of the plan set. Hydric soils, approximate wetland areas, RPA areas, RPA Buffer areas, steep slopes, and Special Flood Hazard areas are shown on this plan.

Soils

Soils are mapped with reference to the Soil Survey of James City and York Counties and the City of Williamsburg, as issued by the Soil Conservation Service. Soils in the area of the project consist of:

11C – Craven – Uchee Complex, 6 to 10% slopes, Hydrologic Group – C

These soils are moderately well drained or well drained soils, generally located on side slopes of narrow ridge tops. The surface layer is typically a dark grayish brown, fine sandy loam about 4 inches thick. The subsurface is pale olive fine sandy loam 5 inches thick. The subsoil, extending to a depth of 42 inches, is yellowish brown clay or yellowish brown sandy clay mottled with gray clay. Generally below 42 inches, the substratum consists of a brownish yellow fine sandy loam. Permeability for this soil is low to moderate; shrink-swell potential is moderate; and erosion hazard is severe.

14B – Emporia, 2 to 6% slopes, Hydrologic Group – C

These soils are well drained, generally gently sloping. The surface layer is typically a dark grayish brown, fine sandy loam about 4 inches thick. The subsurface is pale brown loam 9 inches thick. The subsoil, extending to a depth of 58 inches, is yellowish loam. Generally below 58 inches, the substratum varies between gray, brown and red firm sandy clay loam. Permeability for this soil is moderate; shrink-swell potential is moderate; and erosion hazard is moderate.

15F – Emporia Complex, 25 to 50% slopes, Hydrologic Group – C

These soils are well drained, and steeply sloped. The surface layer is typically a dark grayish brown, fine sandy loam about 3 inches thick. The subsurface is pale brown loam 3 inches thick. The subsoil, extending to a depth of 45 inches, is yellowish brown loam. Generally below 45 inches, the substratum varies between gray, brown and red firm sandy clay loam. Permeability for this soil is moderate; shrink-swell potential is moderate; and erosion hazard is severe.

17 – Johnson complex, 0 to 2% slopes, Hydrologic Group – D

These soils are very poorly drained soils, and flatly sloped. The surface layer is typically a black silt loam about 8 inches thick. The subsoil is black silty clay loam 26 inches thick. The substratum is a black sandy clay loam and gray fine sandy loam to a depth of about 60 inches. Permeability for this soil is moderate; shrink-swell potential is low; and erosion hazard is low.

25B – Norfolk, 2 to 6% slopes, Hydrologic Group – B

These soils are well drained, and nearly level. The surface layer is typically a grayish brown, fine sandy loam about 10 inches thick. The subsurface is yellowish brown fine sandy loam 7 inches thick. The subsoil, extending to a depth of 72 inches, is yellowish brown fine sandy clay loam. Permeability for this soil is moderate; shrink-swell potential is low; and erosion hazard is moderate.

34B – Uchee, 2 to 6% slopes, Hydrologic Group – A

These soils are well drained, and gently sloped. The surface layer is typically a dark grayish brown, loamy fine sand about 5 inches thick. The subsurface is dark grayish brown loamy fine sand about 5 inches thick. A subsurface, extending to a depth of 19 inches, is yellowish brown fine sand. Generally below 19 inches, the substratum varies between gray, brown and red stratified sandy clay loam. Permeability for this soil is moderate; shrink-swell potential is moderate; and erosion hazard is slight.

Description of Site Drainage (Existing and Post-Development)

Current land use in the proposed project area is a natural forest, with very little impervious cover. With a rolling topography and some steeply sloped areas, the existing site conditions promote stormwater runoff to four primary existing natural channels. Ultimately, runoff from the site collects at Richardson's Millpond.

With proposed residential deveopment planned for the project areas, impervious cover will increase up to 10%. Roadway runoff is collected by roadside ditches, and is directed to adequate channels through the use of storm sewers. Runoff from remaining project areas of Mill Pond, Section 2, flow in un-concentrated form overland, ultimately collecting at Richardson's Mill Pond.

Hydrology and Hydraulics

Topographic information used in the engineering calculations was recently generated by the landowner through an aerial topographic consultant. This topographic information was generated in early 2001. Due to dense vegetation, AES staff was required to field verify some areas of the project topography for design purposes.

Hydrology and hydraulic modeling was performed using computer spreadsheets generated in-house, and compute modeling for hydrology by Hydraflow. SCS methodology was used in all runoff calculations.

Storm sewer modeling was performed by another module of the Hydraflow software. 10-year storm events were evaluated in storm sewer calculations.

Precipitation data for James City County was obtained from Technical Paper No. 40 of the U.S. Department of Commerce. The values of SCS Type II rainfall distributions used are as follows:

Design Storm Frequency (in years)	Rainfall, in inches (for 24-hr. period)
1	2.8
2	3.5
5	4.7
10	5.8
100	8.0

Hydrologic Modeling Results

Evaluating predevelopment conditions provided information on allowable release rates of the 2-year storm. Results of the modeling are provided in the table below of each BMP facility (point of concern). Calculations are also provided.

BMP/SWM #7.3 (pre-development drainage area of 2.25 acres)

Storm Freq.	Pre-dev. Curve Number	Tc (min.)	Pre-dev. Peak Runoff (in cfs)
1	73	21	1.6
2	73	21	2.7
10	73	21	4.0
100	73	21	11.5

BMP/SWM #7.4 (pre-development drainage area of 3.21 acres)

Storm Freq.	Pre-dev. Curve Number	Tc (min.)	Pre-dev. Peak Runoff (in cfs)
1	73	12	3.0
2	73	12	5.0
10	73	12	7.3
100	73	12	20.5

BMP/SWM #7.3 (post-development, drainage area of 3.72 acres)

Storm Freq.	Post-dev. Curve Number	Tc (min.)	Post-dev. Peak Runoff (in cfs)
1	80	17	4.6
2	80	17	7.0
10	80	17	9.7
100	80	17	23.8

BMP/SWM #7.4 (post-development, drainage area of 3.41 acres)

Storm Freq.	Post-dev. Curve Number	Tc (min.)	Post-dev. Peak Runoff (in cfs)
1	80	10	5.4
2	80	10	8.0
10	80	10	11.1
100	80	10	26.9

Modeling of Proposed Detention

To meet design constraints of providing stream channel protection, a timber wall BMP facility was proposed for both BMP 7.3 and BMP 7.4. The required outflow orifices used to provide channel protection for both structures were upsized to 3 inches in diameter due to clogging concerns. The timber structures routed the 2 year storm to levels below those that occurred during pre-development.

BMP/SWM #7.3 (Routed, drainage area of 3.72 acres)

Storm Freq.	Post-dev. Curve Number	Tc (min.)	Post-dev. Peak Runoff (in cfs)
1	80	17	0.5
2	80	17	1.1
10	80	17	4.9
100	80	17	23.7

BMP/SWM #7.4 (Routed, drainage area of 3.41 acres)

Storm Freq.	Post-dev. Curve Number	Tc (min.)	Post-dev. Peak Runoff (in cfs)
1	80	10	0.2
2	80	10	0.4
10	80	10	2.0
100	80	10	26.3

Additional Drainage

Due to the sloping terrain, the roadways of Richardson's Mill Section 2 were placed along ridges. Because of the placement of the roads, most of the lots drain off into natural open space rather than into the storm sewer system. To insure the downstream channels capabilities to handle the additional runoff, we analyzed the increased flow and potential erosion risks. According to our calculations, the channels appear adequate to handle the additional flows.

Mill Pond Section 1 @ Stonehouse
BMP Timber Structure Wall Calculations
AES Job No. 9028-8

2/10/2006
ABS

COMMONWEALTH OF VIRGINIA
AARON B. SMALL
No. 030712
2/10/06
PROFESSIONAL ENGINEER

Given:

butt Diameter =	12	inches =	1 ft
Spacing =	4	ft	
hw =	8.5	ft	
hs =	6	ft	
γw =	62.4	pcf	

Assumptions:

$\gamma soil$ =	120	pcf
esoil =	50	%
γsat =	131	pcf
Ka =	0.31	(Rankine Active Coefficient)

Average Soil at Site (medium clay/compact sandy loam):

p =	200 PSF	* From Table 4.8 in Timber
S =	2500 PSF	Construction Manual

Loads:

Assume total soil pressure acts horizontally on pole

Load due to Saturated Soil =	382.788	lb / LF
Load due to Water =	2254.2	lb / LF
Total Moment about toe, Mo =	7152.476	lb-ft / LF
Equivalent Load at top =	841.4678	lb / LF
Load at each pole =	3365.871	lbs

Calculate Pole Depth:

Calculations based on procedure outlined in Timber Construction Manual Section 4 on Pole-Type Framing.

Assume initial pole depth is same as height (pole is twice length of height)

iteration	d	S1	A	d
1	8.50	566.67	13.90	13.31
2	13.31	887.12	8.88	10.10
3	10.10	673.18	11.70	11.94
4	11.94	796.16	9.89	10.78
5	10.78	718.40	10.96	11.47
6	11.47	764.86	10.30	11.04
7	11.04	736.11	10.70	11.30
8	11.30	753.52	10.45	11.14
9	11.14	742.83	10.60	11.24
10	11.24	749.34	10.51	11.18
11	11.18	745.36	10.57	11.22
12	11.22	747.79	10.53	11.19
13	11.19	746.30	10.55	11.21
14	11.21	747.21	10.54	11.20
15	11.20	746.66	10.55	11.20

USE 20.0 FT MINIMUM LENGTH POLE

Soils Information: Site: _____ Hydric: ❒ Yes ❒ No
Soil Survey Sheet DA: _____ HSG: _____
_____ BMP: _____ Hydric: ❒ Yes ❒ No
Description of Soils at BMP: _____

BMP Control: ❒ None ❒ Onsite ❒ Offsite ❒ Previously Approved ❒ Manufactured BMP
BMP Types: 1- Name: _____ (JCC BMP Type _____ - _____), Points _____
2- Name: _____ (JCC BMP Type _____ - _____), Points _____
3- Name: _____ (JCC BMP Type _____ - _____), Points _____

Onsite Drainage: ❒ Reinforced Concrete Pipe ❒ Corrugated Metal Pipe ❒ Aluminum Type Pipe
❒ Corrugated Polyethylene Pipe ❒ PVC Type Pipe ❒ Open Channel Type
❒ Storm Drain ❒ Culverts Type: _____
❒ Inlets ❒ Other (Specify): _____

1. VDOT Standards & Specifications Referenced for work **within** R/W: ❒ Yes ❒ No
2. VDOT Standards & Specifications Referenced for work **outside** R/W: ❒ Yes ❒ No

Site Limitations: ❒ RPA ❒ RMA ❒ Steep Slopes ❒ Delineated Wetlands
❒ Hydric Soils ❒ Critical Soils ❒ Vegetated ❒ Buffers: _____
❒ Defined Natural Drainage Features onsite ❒ Downstream Storm/Culv.
❒ Downstream Channel Erosion ❒ Floodplain ❒ Problem Drainage Area
❒ Stormwater Hotspot ❒ Other, _____
❒ Site Activities may warrant a General VPDES Permit for Discharge of Stormwater Associated with Industrial Activities (ie. process water, batch plants, etc.).

Site Stormwater Management / BMP Control (Add sheets if necessary for Multiple Onsite Facilities):

❒ Yes ❒ No	# BMP 7.4 Timber WALL F-1					
Predev (Present)	DA = 3.21 ac.	C/CN = 73	Tc = 12 min / hrs.			
2-year	(5.0) 4.96 cfs					
10-year	7.30 cfs					
100-year	20.52 cfs					
PostDev w/o Detention (Inflow)	DA = 3.41 ac.	C/CN = 80	Tc = 10 min / hrs.			
1-year	5.4					
2-year	8.0 8.03 cfs					
10-year	11.1 11.08 cfs					
100-year	26.93 cfs					
PostDev with Detention (Routed)	DA = 3.41 ac.	C/CN = 80	Tc = 10 min / hrs.			
2-year	~~0.1~~ 0.35 cfs			at El.	25.42	
10-year	~~2.0~~ 2.02 cfs			at El.	25.85	
100-year (DHW)	26.63 cfs			at El.	26.27	

1-YR 3.0CFS

1-YR 0.2CFS 0.23 CFS @EL 24.42

Downstream Tailwater Assumption for Pond Routing: 23.50 (2' depth)
Routed Peak Discharges (Outflows) from BMP meet Predevelopment Allowables: ☑ Yes ❒ No
Appears to Meet VESCH / E&SC Ordinance / CBP Ordinance Requirements: ☑ Yes ❒ No

25-YEAR – 17.51CFS Post

Pond / BMP Design Data (Add Sheet If Necessary for Multiple Onsite Facilities):

☐ Check if None ☐ Provided: BMP # 7.4 Type: Timber Crib Wall + Fill

Y N * See Below for Pertinent WQv /Stream CPv Design Information. L=55'

☑ ☐ Top of Facility (Dam Crest) El. 26.0

☑ ☐ Design High Water (100-year) El. 26.27

☑ ☐ Emergency Spillway (ES) Crest El. 26.27 BW:_____ SS: _____

☐ ☐ FreeBoard NA 1 ft. or > with Emerg. Spillway.

☐ Acceptable ☐ Not Acceptable. 2 ft. or > w/o Emerg. Spillway.

☑ ☐ Principal Spillway (Riser) Crest El. 26.0 Size/Type: 8" PVC Perf

☐ ☐ Principal Spillway Crest 1 ft. below Crest of Emergency Spillway. ☐ Yes ☑ No ☐ N/A

☑ ☐ Stage-Storage Curve or Data

☑ ☐ Outlet Rating Curve or Table (Composite Structure)

☐ ☑ Extended Detention for WQ Provided (Min. 24 hours) ☐ Yes ☐ No ☐ N/A

☐ ☐ 1-year, 24 hour detention criteria for Stream Channel Protection. ☑ Yes ☐ No ☐ N/A

☐ ☐ 1-year design storm El. 25.3 or Volume 14,068 CF

☐ ☑ Normal/Permanent Pool El. NA ☐ N/A

☑ ☐ Orifice/Weir #1 (Highest El.) El. 26.0 Type: TOP WALL, L=55'

☑ ☐ Orifice/Weir #2 El. 26.0 Type: 8" crest

☑ ☐ Orifice/Weir #3 El. 21.7 Type: 8" PVC to 3" PVC

☐ ☐ Orifice/Weir #4 El. _____ Type: _____

☐ ☐ Orifice/Weir #5 (Lowest El.) El. _____ Type: _____

☑ ☐ Low Flow Orifice (ExDet, CPv) El. 21.7 Type: 8" to 3"

☐ ☑ Pond Drain w/ Valve (24 hr.) El. _____ Type: _____

☑ ☐ Pond Bottom (Positive Drain) El. NATURAL Riser Height: _____

☐ ☑ Steps or Access Provided (for over 4 ft. depth) ☐ N/A

☐ ☑ Riser Base Bottom El. _____ Type: _____

☐ ☑ Core Trench ☐ N/A

☐ ☑ Anti-Seep Collars or other Acceptable Seepage Control Method. ☐ N/A

☐ ☐ Principal Spillway Anti-Vortex/Trash Rack Device Type: ~~8" Perf~~

☐ ☑ Low Flow Orifice Trash Rack. Type: 8" Perf

☑ ☐ Outlet Barrel: Type/Class: PVC Size: 3"

Inv. U/S: 21.7 Inv D/S: ??

Slope: ?? Length: ?? (ft.)

☐ ☑ Flared End Section/Wingwalls. Matches Outlet Barrel material type, over 48 inch with fence.

☐ ☐ Outlet Protection.

☑ Standard Riprap Outlet Protection (OP) Type: Need outfall channel at toe

☐ Special Dissipator Structure (SDS) Type: _____

☐ ☐ BMP Cleanout Elevation El. _____ or Depth _____

☐ ☐ Adequate Channel Downstream of BMP: ☐ 1-year, 24-hour; or ☐ MS # 19 criteria.

Sketch or Notes, If Necessary:

TSB #2

3" BmP RIP

* WQv / Stream CPv Design Summary	
Imperv. Area	
WQTV (Per JCC Man)	
WQ Vol. Required	
WQ Vol. Provided	
1-yr SCPv Required	14068 CF
1-yr SCPv Provided	14068 CF
Ext Det Orifice Size	3"ϕ

Sediment Trap & Basins

☐ Temporary Sediment Trap # 1 _____ DA = _____ < 3 acres

☐ Temporary Sediment Trap # 2 _____ DA = _____ < 3 acres

☐ Temporary Sediment Basin # 1 _____ DA = _____ ☐ BMP # ____ convert.

☑ Temporary Sediment Basin # 2 _____ DA = _____ ☑ BMP # 7.4 convert.

E&SC Plan Comments: _____

Scott Thomas

To: Mike Randall
Subject: RE: Timber Dam BMP Acceptance at Stonehouse

Mike

Hello and I hope all is well. I know this is an older email; however, I am just using it because it had your email address. Anyways, I am sending it to to let you know we have requests in now, as expected, for release of siltation bond associated with Stonehouse Phase (Area) 1, Section 7-A, Richardson Mill Section 1 (S-99-01:S-100-02) and Richardson Mill Section (S-64-02), which as you know contains the four timber walls.

WC 075 BMP # 7.3 Timber Crib Wall End of Morning Mist Lane
WC 076 BMP # 7.4 Timber Crib Wall South of Sawyer Way
WC 077 BMP # 7.2 Timber Crib Wall End of Mill Pond Run cul-de-sac
WC 078 BMP # 7.1 Timber Crib Wall West of Yarding Way

10/29/08 10:30AM

- CALLED MIKE RANDALL
- Association is ok w/ release of siltation bond
- Was happy with staffs reaction and resolve
- Mike Majdeski worked closely with HOA in conversion of BMPs to dry pond.
- Scott & Mike did joint insp. on 10/23/08. No issues.

Scott J. Thomas, P.E.
Director
James City County Environmental Division

Visit:
www.protectedwithpride.org
www.jccegov.com

From: Mike Randall [mailto:mhrandall@cox.net]
Sent: Thursday, July 31, 2008 7:52 PM
To: Scott Thomas; Michael Majdeski
Cc: Ellen Clark; Dave Lehnertz
Subject: Timber Dam BMP Acceptance at Stonehouse

Scott,
After walking all four BMPs, it looks like the developer is at or near finalizing work on BMPs WC075, 76, 77, & 78 for acceptance by JCCED and turn over to the Stonehouse HOA for continuing maintenance. Please let me know if/when we can expect a final acceptance inspection. As we have previously discussed, I would like to accompany your staff on the final inspection(s) if at all possible.
Thanks,
Mike Randall
Stonehouse Grounds & Maintenance
Tel 757-566-3405
Cell 757-293-8205
Email mhrandall@cox.net

THE ASSOCIATION AT STONEHOUSE, INC.

RECEIVED
JUN 6
ENVIRONMENTAL DIVISION

June 4, 2008

Mr. Scott Thomas
Environmental Director
101E Mounts Bay Road
P. O. Box 8784
Williamsburg, VA 23287

Dear Mr. Thomas:

The Association at Stonehouse, Inc. appreciates the decision of your office to require that Dominion be compelled to restore the four BMPs for which it is responsible to a dry condition, as originally envisioned in the plan for Stonehouse.

We now have a concern about two BMPs located in the Lisburn section of Stonehouse that are presently owned by GCR, Inc. We have received a letter from D. Wayne Moore, the attorney for GCR, Inc., which appears to indicate that GCR wants to convey the common property it owns, including the BMPs, to Stonehouse. It must be made clear to GCR that the BMPs must be left in a dry condition.

We would appreciate it if you could advise me if GCR contacts your office concerning the transfer of these two BMPs, and you insist that GCR have these two BMPs established as dry BMPs before they are transferred to us.

Very truly yours,

Robert W. Spencer
President Emeritus

SJT
Joe B
MIKE M
I am not aware of any asbuilts or const cert coming in for Lisburn yet to even start to think about bond release. When they do come in + we do our final inspection, I want to "try" to include the HOA in as a courtesy. I committed to try that
Scott
Return letter to me.

9701 MILL POND RUN TOANO, VA 23168 (757) 566-0128 PHONE (757) 566-1198 FAX

CONSULTING ENGINEERS

5248 Olde Towne Road • Suite 1 • Williamsburg, Virginia 23188
(757) 253-0040 • Fax (757) 220-8994 • E-mail aes@aesva.com

March 27, 2006

Mr. Scott J. Thomas, P.E.
James City County Environmental Division
101-E Mounts Bay Road
P.O. Box 8784
Williamsburg, VA 23187-8784

BMP 7.1 WC075
7.2 WC077
7.3 WC075
7.4 WC076

RE: Stonehouse Richardson's Mill, Section 1
Timber Structure BMPs
AES Project No. 9028-08

Dear Mr. Thomas:

Mr. Marc Bennett of my office has asked me to review my design for the timber structures being used as dams for the BMPs at the above referenced project. He has informed me that our client would like to forego conversion of the sediment basins to the permanent BMPs and simply let them operate as shallow marshes that would eventually silt in. The reason for this is that the contractor has indicated that "more damage than good" would result from his activities to fill in the wet pool portion of the sediment trap. This is the only activity required to convert the sediment basins to the permanent dry detention basins.

Attached for your reference are the calculations for the poles which carry the load for the structure and transfer it to the ground. The height of the wall, h_w, is shown in the calculations as 8.5 feet. This is the height of the structure above the existing grade at the maximum point. The exposed height of the wall is closer to 4.5 feet as soil was placed on both sides of the structure. The soil on the downstream side is ignored, even though some passive resistance is permitted. On the upstream side of the wall, the height of soil, h_s, is shown in the calculations as 6.0 feet. This takes into account sedimentation within 2.5 feet of the top of the wall. Both the sediment and the water load generate forces on the wall which is ultimately resisted by the poles. This resistance is dependent on the diameter of the pole, the depth of embedment, and the soil characteristics.

Soil values used are based upon conservative assumptions as well as soil borings performed throughout the subdivision. Pole diameter is 12 inches as designed and verified by as-builts. The only variable is the depth. Based upon design and the as-builts, 20 feet long poles were used in both structures. The original design calculations only used a height of wall of 8.0 feet and required a minimum 19.0 feet long pole. The as-builts show an increased height of the wall of 8.5 feet, a 20.0 feet long pole is required (the actual calculations require 19.7 feet which is then rounded up to 20.0 feet). Therefore the as-built structures are still adequate.

The structures are designed for the worst case condition which is the configuration where the dry detention facility is silted in over 2 feet above the proposed bottom elevation of the basin. As a result, leaving the sediment basins as is and allowing them to develop into shallow marshes will not adversely impact the structure but may actually increase the life of the BMPs by increasing the time before dredging of accumulated sediments would be required.

I trust that I have satisfactorily alleviated your concerns over the stability of the structures. If you have any questions or require additional information regarding this matter, please do not hesitate to contact me at your earliest convenience.

Sincerely,

AES Consulting Engineers

Aaron B. Small, P.E.
Project Manager
asmall@aesva.com

Attachments: Timber Structure Calculations

S:\Jobs\9028\08-Mill Pond Sub\Wordproc\Document\902808L19.abs.doc

CONSULTING ENGINEERS
5248 Olde Towne Road, Suite 1, Williamsburg, VA 23188
614 Moorefield Park Drive, Richmond, VA 23236
(757) 253-0040
(804) 330-8040
www.aesva.com

February 15, 2005

RECEIVED
FEB 17 2005
ENVIRONMENTAL DIVISION

Mr. Darryl E Cook, P.E.
Mr. Scott J Thomas, P.E.
James City County Environmental Division
101-E Mounts Bay Road
Williamsburg, Virginia 23187

RE: Stonehouse, Richardson's Mill, Section 1
AES Project No. 9028-08
James City County Case Number S-99-01

And

Stonehouse, Richardson's Mill, Section 2
AES Project No. 9028-13
James City County Case Number S-25-03

Dear Mr. Cook and Mr. Thomas;

We would appreciate your consideration of the configuration of permanent SWM/BMP structures for the Stonehouse subdivisions referenced above.

Site improvements to the subdivisions of Richardson's Mill, Section 1 and 2 are substantially complete, and have been inspected by James City County Environmental Staff. There are four-timber structure SWM/BMP's between the two subdivisions: WC075, WC076, WC077, and WC078. These temporary sediment basins can be converted or completed to be permanent SWM/BMP facilities.

The design and construction of these facilities provided an excavated area for sediment accumulation during the construction period. Final conversion of the facilities, by design, involves the restoration of the existing ground contour, and altering the discharge to the final configuration. However, the current installations, after some repairs, meet the intent of the original design for erosion and sediment control facility, and storm water management needs. The question is whether the current installations need to be converted to the final design.

Under these conditions, we believe it is more beneficial to maintain the current configuration, and we offer the following supporting reasons:

- That, left in the current configuration, we fully expect that a wetland environment will naturally establish upland of the timber structure, within the remaining wet pool of the sediment basin.
- That with transition of the wet pool area to a shallow marsh, the timber structure BMP will have nutrient up-taking capability, removing more non-point source pollutants than a Timber Dry Detention Basin.
- That the developing shallow marsh component assists to slow the flow of runoff through the facility, which allows more runoff to infiltrate into the ground or evaporate.
- That further disturbances of the perimeter of the timber structure for the conversion would be eliminated, thereby eliminating the potential of sediment runoff, and erosion.
- And, that the remaining wet capacity of the pool can be used to capture any erosion and sediment runoff that any upland construction may cause in the future.

Given this information, we would appreciate a response from you to determine whether it is permissible to maintain the current configuration.

If you have any questions or concerns, feel free to contact me at any time.

Sincerely,

AES Consulting Engineers

Victoria Bains

Victoria A. Bains
Project Engineer
vbains@aesva.com

cc: file

S:\Jobs\9028\13-Mill Pond Sub. Sect. 2\Wordproc\Document\902813110.vmb.doc

Scott Thomas

From: Scott Thomas
Sent: Wednesday, March 16, 2005 2:31 PM
To: 'Tory Bains'
Cc: Darryl Cook
Subject: RE: Richardson's Mill Section 1 & 2 Conversion of BMP's

Based on my recollection, the approved plan(s) allowed for an excavated micropool in front of the wall/mound area for temporary sediment basin purposes which would be restored to existing ground once the BMP was converted. Mainly are there any further geotechnical aspects for the wall and it's soil base (mound) that need to be considered due to a proposed permanent pool on the front sides of the wall/mound. For the approved design, this was only intended to be a temporary pooling condition, now it will be permanent. Secondly will having a permanent micropool result in addition maintenance burden (adjustments to the approved BMP maintenance plan) and would there be any mosquito-vector related issues involved.

Also, the request letter states a question whether the current installations need to be converted to the final approved design and lists lots of reasons to support leaving it alone, but the letter does not state the main reason why the applicant/contractor does not want to follow the approved plan.

Scott J. Thomas, P.E.
James City County
Environmental Division

Visit:
http://www.james-city.va.us/resources/devmgmt/div_devmgmt_environ.html
and
www.protectedwithpride.org

-----Original Message-----
From: Tory Bains [mailto:vbains@aesva.com]
Sent: Wednesday, March 16, 2005 2:17 PM
To: Scott Thomas
Subject: RE: Richardson's Mill Section 1 & 2 Conversion of BMP's

Scott,

What are your concerns with the timber crib walls remaining in the current state?

Thanks,

Tory

Victoria (Tory) A. Bains
Project Engineer
AES Consulting Engineers
5248 Olde Towne Road, Suite 1
Williamsburg, VA 23188
Tele: (757) 253-0040
Fax: (757) 220-8994
vbains@aesva.com
www.aesva.com

AES Consulting Engineers a Professional Corporation Confidentiality Note: This e-mail and any attachments are confidential and may be protected by legal privilege. If you are not the intended recipient, be aware that any disclosure, copying, distribution or use of this

e-mail or any attachment is prohibited. If you have received this e-mail in error, please notify us immediately by returning it to the sender and delete this copy from your system. Thank you for your cooperation.

From: Scott Thomas [mailto:SCOTTT@james-city.va.us]
Sent: Tuesday, March 15, 2005 9:22 AM
To: Bains, Victoria A.
Subject: RE: Richardson's Mill Section 1 & 2 Conversion of BMP's

I have read the request and do not want to render a decision until I look at these four timber crib walls (if time does not permit, maybe one that represents all of them).

Scott J. Thomas, P.E.
James City County
Environmental Division

Visit:
http://www.james-city.va.us/resources/devmgmt/div_devmgmt_environ.html
and
www.protectedwithpride.org

-----Original Message-----
From: Bains, Victoria A. [mailto:vbains@aesva.com]
Sent: Monday, March 14, 2005 4:53 PM
To: Scott Thomas
Cc: ccloughly@stonehouseva.com; ggoder@kaufcanconsulting.com
Subject: Richardson's Mill Section 1 & 2 Conversion of BMP's

Scott,

I sent you a letter dated February 15, 2005 requesting the county to allow these BMP's to remain in the current state. I wanted to check on the status of the review for not converting the BMP's in Richardson's Mill Section 1 & 2 to final design. Please let me know if you have any questions or concerns with the design.

If you are planning a site visit to these or any other facilities within Stonehouse please inform me of the time and I will schedule to meet you on site.

Thank you,

Tory

Victoria (Tory) A. Bains
Project Engineer
AES Consulting Engineers
5248 Olde Towne Road, Suite 1
Williamsburg, VA 23188
Tele: (757) 253-0040
Fax: (757) 220-8994
vbains@aesva.com
www.aesva.com

Scott Thomas

Scott,
Here are some subities from Stonehouse that are up for release. I think that you inspected some of these BMPs already.
Thanks!
Mikey

From: Bains, Victoria A. [vbains@aesva.com]
Sent: Tuesday, May 23, 2006 4:30 PM
To: Scott Thomas
Cc: ggoder@kaufcanconsulting.com
Subject: Stonehouse - BMP Inspection List

Scott,

Here is the list of BMP's that need to be inspected.

Bent Tree:

AES No.	JCC No.	
BMP 5.1	WC071	✓ REINSPECT 5/30/06. OK. WILL CLEAN LFO.
BMP 5.4	WC072	✓ REINSPECT 5/30/06. OK. " "
~~BMP 5.2~~	WC073	✓ REINSPECT 5/30/06. OK " "
~~BMP 5.3~~	WC074	✓ REINSPECT 5/30/06. OK " " + MOW DAM.

Bent Tree 3c.5B sec 7 + Timber Creek

Release

Richardson's Mill:

AES No.	JCC No.	
BMP 7.3	WC075	✓ REINSPECT 5/30/06. OK. NO PROBLEMS. Deep Valley. PP
BMP 7.4	WC076	✓ Reinspect 5/30/06. OK. NO " " PP
BMP 7.2	WC077	✓ Reinspect 5/30/06. OK. " " "
BMP 7.1	WC078	Reinspect 5/30/06. BMP OK, Inflow pipe undercut. Process Letter.

Let me know if you cannot find any of the certifications or calculations and I can have copies sent to you before we meet. See you at the Sales Center next Tuesday May 30 at 1:00pm.

Thank you,

Tory

Victoria (Tory) A. Bains
Project Engineer

AES Consulting Engineers
Williamsburg | Richmond | Gloucester
(757) 253-0040
www.aesva.com

AES Consulting Engineers Confidentiality Note: This e-mail and any attachments are confidential and may be protected by legal privilege. If you are not the intended recipient, be aware that any disclosure, copying, distribution or use of this e-mail or any attachment is prohibited. If you have received this e-mail in error, please notify us immediately by returning it to the sender and deleting this copy from your system. Thank you for your cooperation.

AES CONSULTING ENGINEERS
Engineering, Surveying, and Planning
5248 Olde Towne Road, Suite 1
WILLIAMSBURG, VIRGINIA 23188

Phone: (757) 253-0040
Fax: (757) 220-8994

LETTER OF TRANSMITTAL

ATTN: **Mike Majdeski**

CO.: JCC Environmental Division

Address: 101-E Mounts Bay Road

Williamsburg, VA 23187

cc: file

DATE	JOB NO.
10/16/08	9028-17

FROM: Victoria Bains

RE
Stonehouse
Richardson's Mill Section 1 & 2

RECEIVED
OCT 16 2008
ENVIRONMENTAL DIVISION

WE ARE SENDING YOU THE FOLLOWING ITEMS:

☒ Attached
☐ Under separate cover via

☐ Original(s) ☒ Print(s) ☐ Plan(s) ☐ Specification(s) ☐ Change Order

☐ Copy of letter(s) ☐ Other:

COPIES	DATE	No. of Pages	DESCRIPTION
1	10/16/08	16	4 - BMP Certification

THESE ARE TRANSMITTED as checked below:

☐ For your approval ☐ For your signature ☐ For review and comment

☐ For your use ☒ As you requested ☐ As requested by:

☐ Other:

REMARKS:

If enclosures are not as noted, kindly notify us at once.

File name: S:\Jobs\9028\17 Stonehouse Easement Plats\Wordproc\Document\902817I-10-16-08vab.doc
Form Rev. 7/02

AES CONSULTING ENGINEERS
Engineering, Surveying, and Planning
5248 Olde Towne Road, Suite 1
WILLIAMSBURG, VIRGINIA 23188

Phone: (757) 253-0040
Fax: (757) 220-8994

LETTER OF TRANSMITTAL

RECEIVED
MAR 3 0 2006
ENVIRONMENTAL DIVISION

ATTN: **Scott Thomas**

CO.: JCC Environmental

Address:

cc:

DATE	JOB NO.
03/30/06	9028-08

FROM: Victoria Bains

RE
Stonehouse - Richardson's Mill Section 1 & 2 Timber Wall BMP's

7.1, 7.2, 7.3, 7.4

WE ARE SENDING YOU THE FOLLOWING ITEMS:

☐ Attached
☐ Under separate cover via

☐ Original(s) ☐ Print(s) ☐ Plan(s) ☐ Specification(s) ☐ Change Order

☐ Copy of letter(s) ☐ Other:

COPIES	DATE	No. of Pages	DESCRIPTION
1	03/27/06	3	Letter & Calculations for Timber Walls
1	04/22/06	1	Letter certifying construction of BMP's in Richardson's Mill

THESE ARE TRANSMITTED as checked below:

☐ For your approval ☐ For your signature ☐ For review and comment

☐ For your use ☒ As you requested ☐ As requested by:

☐ Other:

REMARKS:
Scott,
If you need anything else please let me know
Thank you,
Tory

If enclosures are not as noted, kindly notify us at once.

James City County Environmental Division
Stormwater Management / BMP Inspection Report
Detention and Retention Pond Facilities

County BMP ID Code (if known): WC076 SELTA RMP Sec 2

Name of Facility: BMP #7.4 Timber Wall BMP No.: ____ of ____ Date: 5/30/06

Location: Mill Pond Run, Sawyer Way

Name of Owner: ____

Name of Inspector: SJ Thomas

Type of Facility: ____

Weather Conditions: ____ Type: ☑ Final Inspection ☐ County BMP Inspection Program ☐ Owner Inspection

Reinspect

If an inspection item is not applicable, mark NA, otherwise mark the appropriate column.

O.K. - The item checked is in adequate condition and the maintenance program is currently satisfactory. No action required.
Routine - The item checked requires attention, but does not present an immediate threat to the function/integrity of the BMP.
Urgent - The item checked requires immediate attention to keep the BMP operational and to prevent damage to the facility.

Provide an explanation and details in the comment column, if routine or urgent are marked.

Facility Item	O.K.	Routine	Urgent	Comments
Embankments and Side Slopes:	4' High Timber Wall in Deep Valley			
Grass Height	✓			
Vegetation Condition	✓			
Tree Growth	✓			
Erosion	✓			
Trash & Debris	✓			
Seepage	✓			
Fencing or Benches	✓			
Interior Landscaping/Planted Areas:	☐ None ☐ Constructed Wetland/Shallow Marsh ☑ Naturally Established Vegetation			
Vegetated Conditions	✓			
Trash & Debris	✓			
Floating Material	✓			
Erosion	✓			
Sediment	✓			
Dead Plant	✓			
Aesthetics	✓			
Other				
Notes:				

Facility Item	O.K.	Routine	Urgent	Comments
Water Pools: ❒ Permanent Pool (Retention Basin) ❒ Shallow Marsh (Detention Basin) ❒ None, Dry (Detention Basin)				
Shoreline Erosion	✓			Shallow perm. pool
Algae	✓			See geotech letter
Trash & Debris	✓			
Sediment	✓			
Aesthetics	✓			
Other	✓			
Inflows (Describe Types/Locations):				
Condition of Structure	✓			
Erosion	✓	✓		Some minor erosion @ pipe
Trash and Debris	✓			inflow.
Sediment	✓			
Outlet Protection	✓			
Other	✓			
Principal Flow Control Structure - Riser, Intake, etc. (Describe Type): Rock + PVC Riser				
Condition of Structure	✓			
Corrosion	✓			
Trash and Debris	✓			
Sediment	✓			
Vegetation	✓			
Other	✓			
Principal Outlet Structure - Barrel, Conduit, etc. : PVC outlet				
Condition of Structure	✓			
Settlement	✓			
Trash & Debris	✓			
Erosion/Sediment	✓			
Outlet Protection	✓			
Other	✓			
Emergency Spillway (Overflow): NA – T.C.W.				
Vegetation				
Lining				
Erosion				
Trash & Debris				
Other				
Notes:				

Facility Item	O.K.	Routine	Urgent	Comments
Nuisance Type Conditions:				
Mosquito Breeding	✓			
Animal Burrows	✓			
Graffiti	✓			
Other	✓			
Surrounding Perimeter Conditions:				
Land Uses	✓			
Vegetation	✓			
Trash & Debris	✓			
Aesthetics	✓			
Access /Maintenance Roads or Paths	✓			
Other	✓			

Remarks:

Looks good. 3-4' perm. pool.
Wall good shape, clean.
Riprap around perf riser
PP 1-2' below perf. riser.

Overall Environmental Division Internal Rating: 3

Signature: [signature] P.E. **Date:** 5/30/08

Title: Chief Engineer

SWMProg\BMP\CoInspProg\InspForms\DetRet.wpd

James City County Environmental Division
Stormwater Management / BMP Inspection Report
Detention and Retention Pond Facilities

County BMP ID Code (if known): WC076

Name of Facility: TIMBER STRUCTURE DRY POND BMP No.: 2 of 4 Date: 10/10/2008

Location: RICHARDSON'S MILL SECTION 2 - STONEHOUSE (OFF SAYWER'S WAY CUL-DE-SAC)

Name of Owner: STONEHOUSE DEVELOPMENT COMPANY, LLC.

Name of Inspector: M. MAJDESKI

Type of Facility: DETENTION BASIN

Weather Conditions: PTLY CLDY 75° Type: ☑ Final Inspection ☐ County BMP Inspection Program ☐ Owner Inspection

If an inspection item is not applicable, mark NA, otherwise mark the appropriate column.

O.K. - The item checked is in adequate condition and the maintenance program is currently satisfactory. No action required.
Routine - The item checked requires attention, but does not present an immediate threat to the function/integrity of the BMP.
Urgent - The item checked requires immediate attention to keep the BMP operational and to prevent damage to the facility.

Provide an explanation and details in the comment column, if routine or urgent are marked.

Facility Item	O.K.	Routine	Urgent	Comments
Embankments and Side Slopes:				
Grass Height	✓			
Vegetation Condition	✓			
Tree Growth	✓			
Erosion	✓			
Trash & Debris	✓			
Seepage	✓			
Fencing or Benches	✓			
Interior Landscaping/Planted Areas: ☐ None ☐ Constructed Wetland/Shallow Marsh ☑ Naturally Established Vegetation				
Vegetated Conditions	•	✓		RE-VEGETATE AREA DOWNSLOPE OF OUTFALL
Trash & Debris	✓			
Floating Material	✓			
Erosion	✓			
Sediment	✓			
Dead Plant	✓			
Aesthetics	✓			
Other				
Notes:				

Facility Item	O.K.	Routine	Urgent	Comments
Water Pools: ☐ Permanent Pool (Retention Basin) ☐ Shallow Marsh (Detention Basin) ☑ None, Dry (Detention Basin)				
Shoreline Erosion				
Algae				
Trash & Debris				
Sediment				
Aesthetics				
Other				
Inflows (Describe Types/Locations):				
Condition of Structure	✓			
Erosion	✓			
Trash and Debris	✓			
Sediment	✓			
Outlet Protection	✓			
Other				
Principal Flow Control Structure - Riser, Intake, etc. (Describe Type):				
Condition of Structure	✓			
Corrosion	✓			
Trash and Debris	✓			
Sediment	✓			
Vegetation	✓			
Other				
Principal Outlet Structure - Barrel, Conduit, etc. :				
Condition of Structure	✓			
Settlement	✓			
Trash & Debris	✓			
Erosion/Sediment	✓			
Outlet Protection	✓			
Other				
Emergency Spillway (Overflow):				
Vegetation				
Lining	✓			
Erosion				
Trash & Debris				
Other				
Notes:				

Facility Item	O.K.	Routine	Urgent	Comments
Nuisance Type Conditions:				
Mosquito Breeding	✓			
Animal Burrows	✓			
Graffiti	✓			
Other				
Surrounding Perimeter Conditions:				
Land Uses	✓			
Vegetation	✓			
Trash & Debris	✓			
Aesthetics	✓			
Access /Maintenance Roads or Paths	✓			
Other				

Remarks:

Overall Environmental Division Internal Rating: 2/5

Signature: [signature] **Date:** 10/10/08

Title: ENV. INSPECTOR

SWMProg\BMP\CoInspProg\InspForms\DetRet.wpd

Date Record Created:

Created By:

WS_BMPNO: WC076

Print Form

PRINTED ON:
Friday, March 12, 2010
3:25:14 PM

WATERSHED	WC
BMP ID NO	076
PLAN NO	
TAX PARCEL	
PIN NO	
CONSTRUCTION DATE	
PROJECT NAME	SH 7A Richardson Mill Pond Sec 1
FACILITY LOCATION	
CITY-STATE	
CURRENT OWNER	
OWNER ADDRESS	
OWNER ADDRESS 2	
CITY-STATE-ZIP CODE	
OWNER PHONE	
MAINT AGREEMENT	No
EMERG ACTION PLAN	No

Get Last BMP No

Return to Menu

MAINTENANCE PLAN	No	CTRL STRUC DESC	
SITE AREA acre		CTRL STRUC SIZE inches	
LAND USE		OTLT BARRL DESC	
old BMP TYP	Timber Wall	OTLT BARRL SIZE inch	
JCC BMP CODE	F1 Timber Walls		
POINT VALUE		EMERG SPILLWAY	No
		DESIGN HW ELEV	
		PERM POOL ELEV	
SVC DRAIN AREA acres	3.41	2-YR OUTFLOW cfs	0.00
		10-YR OUTFLOW cfs	0.00
		REC DRAWING	No
SERVICE AREA DESCRI			
IMPERV AREA acres	0.00	CONSTR CERTIF	No
RECV STREAM			
EXT DET-WQ-CTRL	No	LAST INSP DATE	Inspected by:
WTR QUAL VOL acre-ft		INTERNAL RATING	
CHAN PROT CTRL	No	MISC/COMMENTS	
CHAN PROT VOL acre-ft		BMP # 7.4, amend S-100-02	
SW/FLOOD CONTROL	No		
GEOTECH REPORT	No		

Additional Comments:

JAMES CITY COUNTY
ENVIRONMENTAL DIVISION

ENVIRONMENTAL DIVISION

STONEHOUSE AREA 1
SEC 7 RICHARDSON MILL POND SEC 1 &2
TIMBER CRIB WALL ISSUE

101 MOUNTS BAY ROAD
P.O. BOX 8784
WILLIAMSBURG, VA 23185
757-253-6670
FAX 757-259-4032

This was a long-standing issue between the developer (Dominion), the Association at Stonehouse (HOA) and the County. In summary, plans for four timber crib walls WC075 (BMP 7.3), WC076 (BMP 7.4), WC077 (BMP 7.2), and WC078 (BMP 7.1) which are situated within Richardson Mill Section 1 (S-99-01; S-100-02) and Section 2 (S-64-02) were approved as dry ponds, quantity only, with a composite design (wall and embankment) which allowed the basins to serve as temporary sediment basins during construction. Given topography and anticipated erosion and sedimentation during Land-Disturbing activities, the most effective E&S control for these sites were determined to be temporary sediment basins. Around February 2005, the engineer for the project sent a letter to the County (February 15, 2005) requesting the County to consider allowing the structures to remain as wet pond features. The County entertained this request through investigation and knowledge of the plans and site features. From the County perspective, it was initially explored for six reasons 1) County RPA regulation changes in 2004 and disruption to what would now be RPA; 2) wet ponds are better for water quality than dry ponds; 3) base flows that were not disclosed during design but were clearly evident during construction; and 4) the basins were designed for temporary sediment basin wet pools thus could handle permanent pools; 5) function of dry versus wet and increased maintenance and hazards associated with dry ponds; and 6) the disruption to established neighborhoods and homes due to construction associated with backfilling the basins per the approved plans.

Without stating approval or disapproval of the request, the County required several issues to be addressed (March 16, 2005) including geotechnical, maintenance and mosquito-vector related. The engineer for the project provided various information to support these concerns. The County again requested additional information in March 16, 2006 and more information was provided by the engineer. Proper asbuilts and construction certifications were also received for the BMPs in a wet pool mode. Requests for information continued into early 2007.

The HOA got involved with the issue in July 2006 by specifically requesting that the HOA grounds and maintenance committee be allowed to accompany the County on all inspections of BMPs in Stonehouse. A response was provided by the County (August 2, 2006) as well as first contact BMP educational material. Around February of 2007, the HOA strongly began to insist that the four BMPs be installed per the plan in dry pond mode against the engineer and County's recommendation to allow the BMPs to be converted to wet pond mode, as they existed during construction. Emails from the HOA were received in early 2007 indicating opposition. The County's response at that time is that the developer was allowed a chance to present their case with supporting information before a decision was rendered.

A meeting with representatives of the developer occurred in April 2007. At this meeting the County and developer looked at status of the request and information provided. The County decided to play an intermediate role between the developer and HOA on the issue and would set a meeting with the HOA to present the position on allowing the four BMPs to remain with wet pools.

A second formal request to allow the BMPs to remain as wet pools was received from the engineer on May 21, 2007. The request did not address safety issues and long term effects to the wall as questioned by the County. An email was issued by the County on June 15, 2007. The County also performed a mosquito-vector analyses of the BMPs in their current wet pool (temporary sediment basin) condition.

This was performed by the Mosquito Control Specialist for the County on June 28, 2007. A report was issued and provided to the HOA.

County staff (Chief Civil Engineer, Scott Thomas) and Inspection Supervisor (Joe Buchite) met with the representatives of the HOA on July 5, 2007. The purpose of the meeting was BMP education, review of the approved plan configurations, and site visits to each of the timber wall BMPs. As County staff was receiving mixed signals from HOA representatives about their desires for the BMPs, the Chief Engineer asked that the HOA provide a letter stating their preference, so that it could be included in the overall County's decision. This was provided by the Association President on July 26, 2007.

Meeting and correspondence on this situation continued throughout the rest of 2007. On February 1st 2008, the County met with representatives of the developer and informed them that the basins would need to be constructed in accordance with the approved plans as dry detention facilities and consistent with the preferences by the HOA, who would be responsible for long-term maintenance of the facilities in accordance with recorded Inspection/Maintenance agreements.

Work by the contractor finished around September /October 2008 and HOA representatives accompanied the County inspector of final inspections on the four BMPs. This occurred on October 10, 2008. Both parties appeared to be satisfied with the work. Asbuilt drawings were also received and reviewed by County staff for the final configurations and found to be satisfactory. The Division Director (Scott Thomas) accompanied the assigned County Inspector (Mike Majdeski) in the field for a brief inspection on October 23, 2008 to visit the final products. All appeared satisfactory.

The Director followed up with a call to the HOA Grounds and Maintenance member, Mike Randall on September 29, 2008 to ensure that the HOA was satisfied with the work. Although not part of the County's normal process, this courtesy was warranted given the history of the issue and established partnerships between the County and HOA.

Throughout this whole process, County staff kept the Stonehouse District supervisor(s) appraised of the situation that had developed and was ongoing with this issue.

10-29-08

Timber Crib Wall Issue in Stonehouse Richardson Mill

- Stonehouse Development Area One
- Site Location
- Brief History of Stormwater Management in Stonehouse
- Typical Process (Bond Release)
- Approved Plans

Stonehouse, Sec 7A, Richardson Mill Pond Section 1, (S-99-01, amended S-100-02)
Stonehouse Sec 7A, Richardson Mill Pond Section 2, (S-64-02, amended S-07-03)
Neither were DRC cases as lots were below 50

- Project & BMP Information

WC 075	BMP # 7.1	Section 1	Timber Crib Wall design
WC 076	BMP # 7.2	Section 1	Timber Crib Wall design
WC 077	BMP # 7.3	Section 2	Timber Crib Wall design
WC 078	BMP # 7.4	Section 2	Timber Crib Wall design

$ 50,000	E&S Bond being held for Section 1;
$130,000	E&S Bond being held for Section 2;
Released	Subdivision Bond being held for Section 1
Released	Subdivision Bond being held for Section 2

- Photographs: Note steep slopes and remote location

- Plan Approval
  - Timber walls allowed in "intermittent" stream areas; followed prior Ches Bay regulations (USGS Blue Line)
  - Unique Temporary Sediment Basin Design
  - Staff review and approval
  - Staff compliance inspections

Parties Involved:

SDC
Bill Mistr
Eng Heath
Glenn Oder (Representative of owner)
Tori Bains (Engineer)
Marc Bennett (Engineer)
Aaron Small (Engineer)
Ray Nice (Contractor)

Association at Stonehouse, Inc.
Robert Spencer, President
Mike Randall, Ground & Maint
Caroline Lott
Ken Kievit
Bob Wargo
Ken Hook
Bruce Lanton
Jim Haynes
Charlie Purcer
Roger Schmidt

Various office meetings with both parties
Full day meeting with HOA (office & field) on July 5, 2007
Various miscellaneous emails from citizens in Stonehouse

Variance Request

- During construction, in accordance with 4VAC50-30-50 (administrative, if not approved within 10 days, then disapproved
- Originally received February 15, 2005
- County staff performed inspections & had some questions, concerns
- Reports and information forwarded by owner/engineer to address County remarks on:

  Structural
  Water Quality
  Safety
  Mosquito-Vector
  Water Quality

- Final reports and documentation received on October 8, 2007