Stormwater Division

MEMORANDUM

DATE: March 13, 2010

TO: Michael J. Gillis, Virginia Correctional Enterprises Document Management Services

FROM: Jo Anna Ripley, Stormwater

PO: 270712

RE: Files Approved for Scanning

General File ID or BMP ID: YC016

PIN: 2320100035

Subdivision, Tract, Business or Owner Name (if known): Williamsburg James City County Schools

Property Description: Norge Elementary School

Site Address: 7311 Richmond Road

(For internal use only) **Box** 24 **Drawer:** 9

Agreements: (in file as of scan date) N **Book or Doc#:** **Page:**

Comments

DRAINAGE AREA TO EX. INFILTRATION TRENCHES = 8.000 ACRES

BUILDING IMPERVIOUS IN DRAINAGE AREA = 2.292 ACRES
TRAILER IMPERVIOUS IN DRAINAGE AREA = 0.026 ACRES
ASPHALT, CURBING, AND SIDEWALK IN DRAINAGE AREA = 2.399 ACRES
TOTAL IMPERVIOUS = 4.717 ACRES

OPEN SPACE IN DRAINAGE AREA = 3.283 ACRES

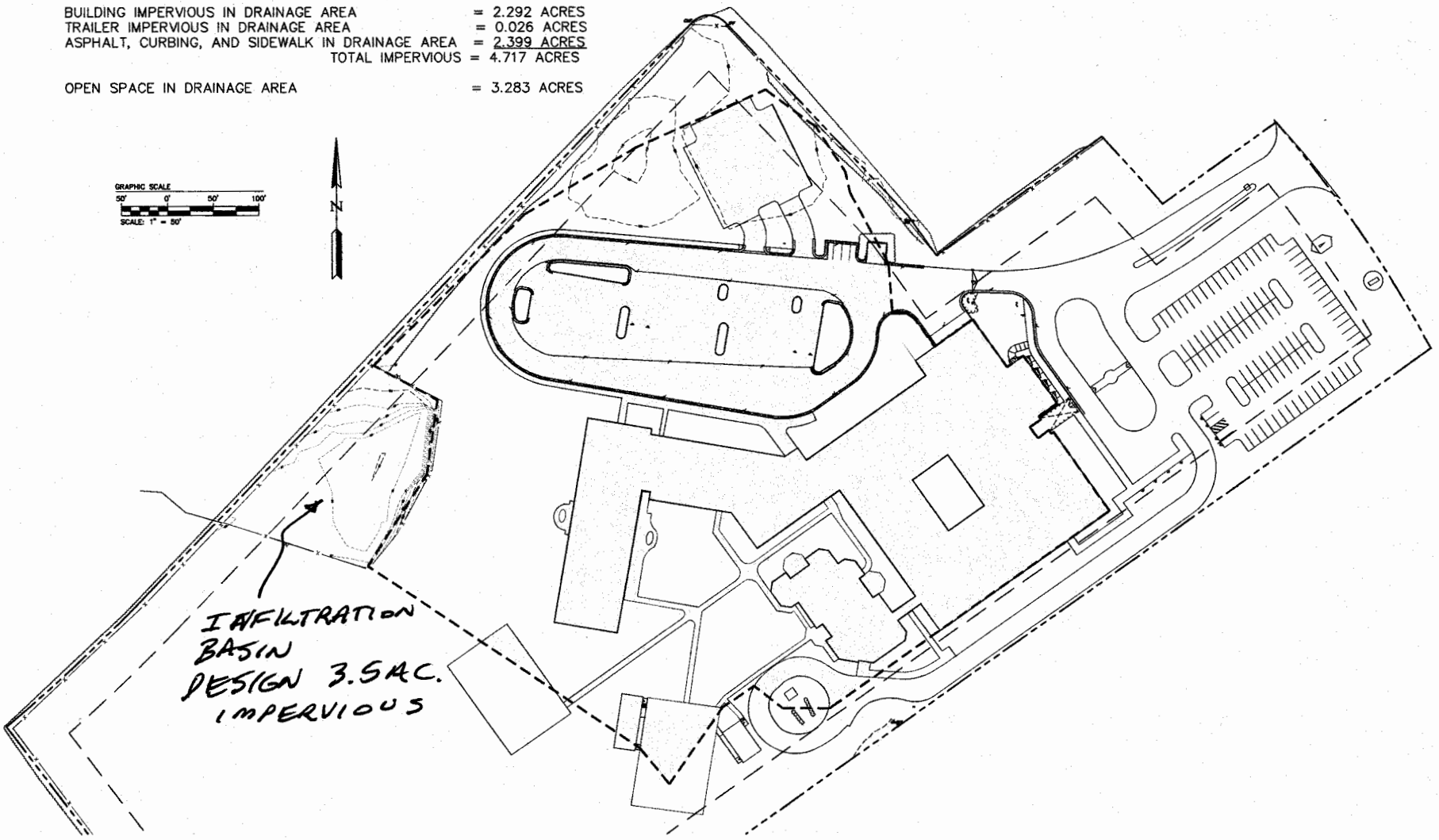

OK - 1/28/94
DEC

NORGE SCHOOL SITE PLAN REVIEW COMMENTS; 1/25/94; WNB

BACKGROUND;

IN OCTOBER WE RECEIVED A CONCEPTUAL SKETCH SHOWING ABOUT 2.5 ACRES OF NEW IMPERVIOUS SURFACE. NO DRAINAGE AREA INFORMATION WAS AVAILABLE AT THIS CONCEPTUAL STAGE. WE USED THE IMPERVIOUS AREA FROM THE SKETCH TO ILLUSTRATE THE METHODOLOGY FOR SIZING THE STORMWATER INFILTRATION TRENCH AND SENT THE ILLUSTRATION TO THE ENGINEERS. THE ILLUSTRATION SHOWED A TRENCH WITH THE FOLLOWING DIMENSIONS 100 FT X 65 FT X 5.5 FT DEEP.

IN NOVEMBER WE RECEIVED A CONCEPTUAL SKETCH WITH TOPOGRAPHY FROM WHICH WE ESTIMATED THE DRAINAGE AREA AT 4 ACRES. WE REVISED THE INFILTRATION TRENCH EXAMPLE AND GAVE THE INFORMATION TO THE ENGINEERS. THE REVISED TRENCH DIMENSIONS WERE 100 FT X 100 FT X 5.5 FT DEEP.

IN DECEMBER WE RECEIVED THE SITE PLAN SHOWING (1) THE BMP DRAINAGE AREA AT ABOUT 8 ACRES AND (2) THE INFILTRATION TRENCH APPARENTLY FROM THE OCTOBER EXAMPLE.

SITE PLAN COMMENTS;

1.CHECK INFILTRATION TRENCH DESIGN; USE 2YR STORM; 11 PT BMP.

TR-55

PREDEVELOPMENT CONDITIONS;

4 ACRES;

SOILS; 20B & 34B ; HYDROLOGIC GROUP A

RCN 50 (50-75% GRASS COVER)

TC .5 HRS

Q=1.1 CFS; RO=0.2 IN.

POST DEVELOPMENT CONDITIONS;

8 ACRES TOTAL CONTAINS 3.5 ACRES IMPERVIOUS COVER.

RCN 71 = { (3.5 X 98) + (4.5 X 50) } / 8

TC 0.15 HRS.

Q= 11 CFS; R0=1.1 IN.

STONE STORAGE REQ'D 0.4 ACFT. 0.59 IN.

STONE TRENCH VOLUME REQ'D 0.4/.4 = 1.0 ACFT

1.0 ACFT = 43560 CFT.

123 FT X 65 FT X 5.5 FT DEEP = 43973 CFT
USE THESE DIMENSIONS IF STONE FILLED TRENCH IS SELECTED BY APPLICANT.

SUGGESTION; USEING HIGH CAPACITY " INFILTRATORS "/ STONE COMBINATION PER ATTACHED SKETCH WILL REDUCE TRENCH SIZE TO 100 FT X 62.5 FT X 4.67 FT.

2. ADD 100 LF 6" X 6" WOOD GROUND CONTACT LEVEL SPREADER OUTFALL TO INFILTRATION TRENCH @ ELEVATION 96.50

3. GRASSED FOREBAY; RECOMMEND BOTTOM ELEVATION @ 95.25; RECOMMEND 40 LF OF GROUND CONTACT WOOD 6" X 6" TOP ELEV @ 96.25; SKETCH ATTACHED.

INFILTRATOR™ Chambers in 2 Layers

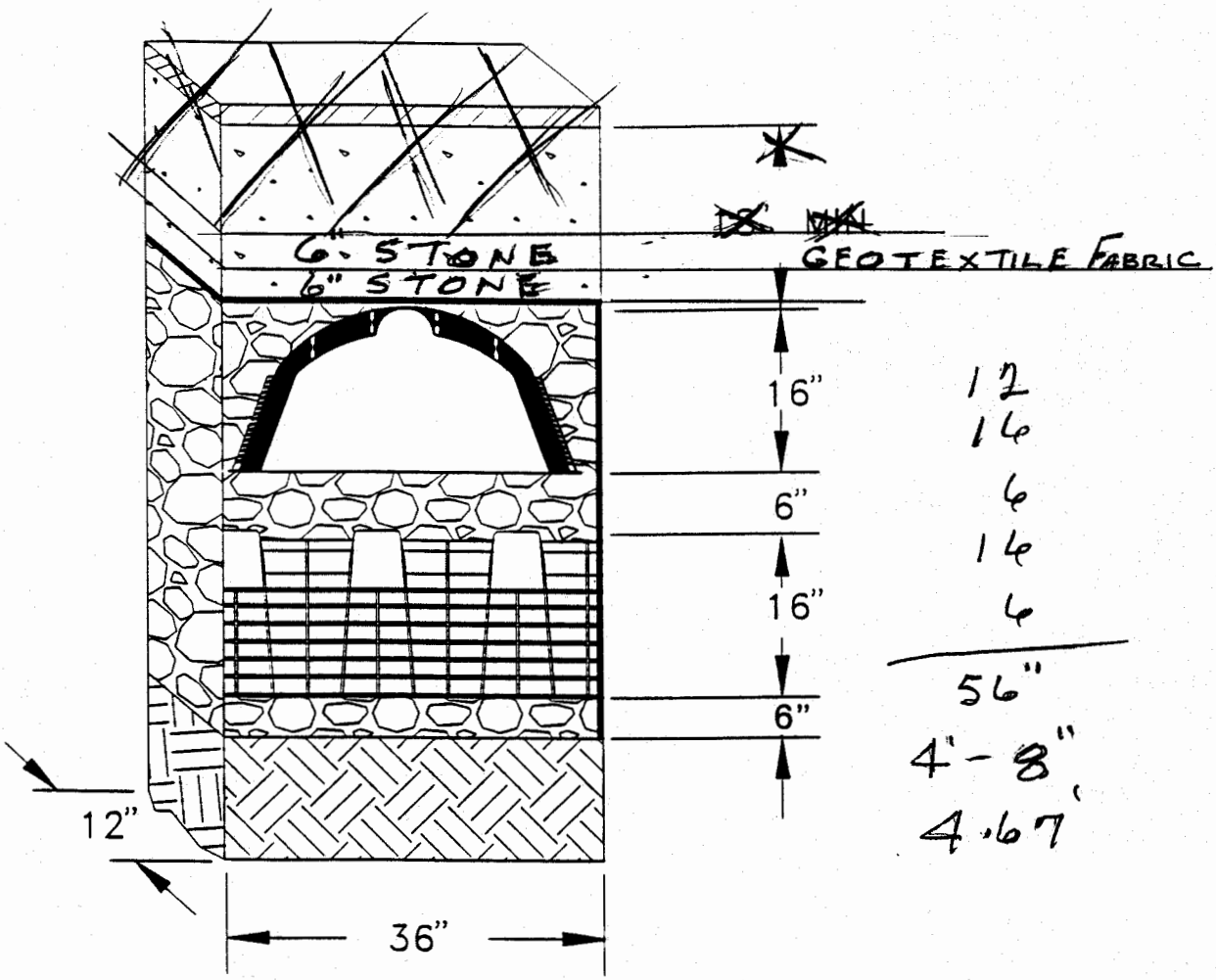

Unit Cross Section x 1 ft. thick

Storage Volume:

Total Volume	**2.83 ft x 3.67 ft x 1 ft**	**=**	**10.39 ft³**
Less Infiltrator Volume	**2 x 2.60 ft³/ft**	**=**	**5.20 ft³**
Stone Volume	8	**=**	**5.19 ft³** + 2.83 = 8.02
Stone Void	**0.35 ~~(5.19~~ ft)³**	**=**	**1.82 ft³** = 2.8
Unit Section Void	2.8 **~~1.82~~ ft³ + 5.20 ft³** (stone void) (Infiltrator void)	**=**	**7.02 ft³** = 8
Stone Required	**5.19 ft³/unit section**	**=**	**0.192 yd³/LF**
Total Storage	8 **~~7.02~~ ft³/L.F. ÷ 2.83 ft wide**	**=**	2.83 **~~2.48~~ ft³/ft²** of bed surface area

62.5 × 98

$$\frac{.4\ Ac\ Fc \times 43560\ ft^2/Ac}{2.83\ ft^3/ft^2} = 6157\ ft^2 \div 62.5'\ \text{WIDTH} = 98.5 \div 6.25 = 15.8$$

LENGTH = 16 × 6.25 = 100'

INFILTRATOR™ SYSTEMS INC.

January 6, 1994

Wayland Bass
JAMES CITY COUNTY
PO Box 8784
Williamsburg, VA 23187-8784

Dear Mr. Bass:

Thank you for your interest in our Infiltrator® leaching and storage chambers serving the septic and storm water markets. Enclosed is information on stormwater use.

The Infiltrator® chamber is an innovative product offering both design flexibility to the engineer and labor saving installation for the contractor giving a superior cost competitive system to the property owner.

Infiltrator® chambers are molded polyethylene which offer proven superior septic system efficiency when compared to the conventional gravel trench systems. The system requires no stone or gravel and no heavy equipment, allowing for a simple, cost saving installation. Polyethylene does not react with the gasses or chemistry found in septic systems.

Infiltrator® chambers are the ideal unit for subsurface storm water infiltration. Each chamber provides a large void area while maximizing infiltrative surface area. Structurally, the units are available in either AASHTO H-10 or H-20 load ratings for grass and paved areas respectfully. Infiltrator® chambers can be used as a cost competitive replacement to any conventional subsurface storm water structure.

For information concerning product availability and distribution, please contact our distributor in your area (distributor list enclosed). If you are located outside of our distributor network, we will ship the product directly from our factory.

Very truly yours,

Bryan Coppes

Bryan Coppes
Staff Engineer

BAC/mn
Enclosures

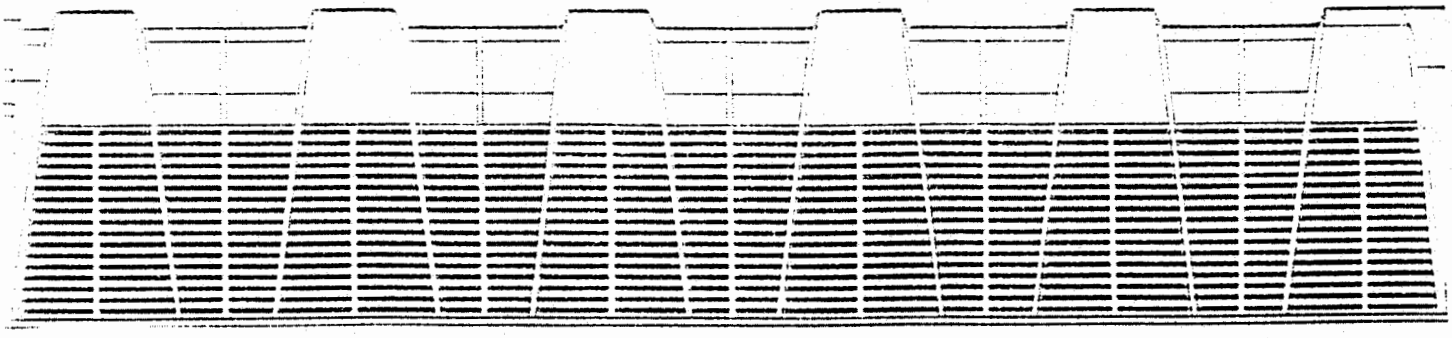

4 Business Park Road • P.O. Box 768 • Old Saybrook, CT 06475 • 203-388-6639 • 800-221-4436 • (Fax) 203-388-6810

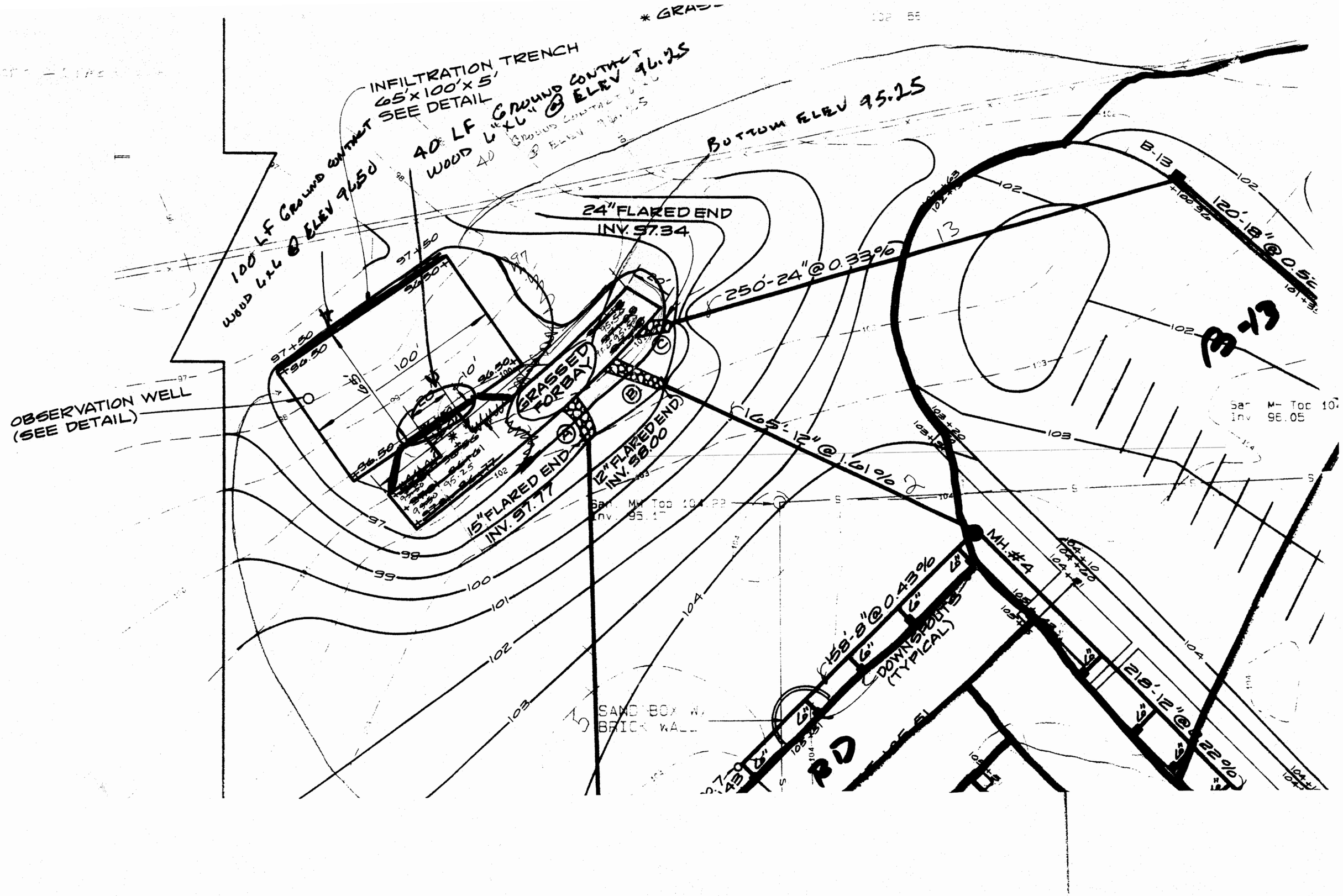
INFILTRATION TRENCH
65'x100'x5'
SEE DETAIL
40 LF GROUND CONTACT
WOOD 6"x6" @ ELEV 96.25
100 LF GROUND CONTACT
WOOD 6"x6" @ ELEV 96.50
BOTTOM ELEV 95.25
24" FLARED END
INV. 97.34
250'-24" @ 0.33%
B-13
120'-18" @ 0.5
OBSERVATION WELL
(SEE DETAIL)
GRASSED FORBAY
12" FLARED END
INV. 98.00
15" FLARED END
INV. 97.77
165'-12" @ 1.61%
MH #4
158'-8" @ 0.43%
DOWNSPOUTS
(TYPICAL)
218'-12" @ 22%
SAND BOX W/
BRICK WALL
100'
65'

Norge Elementary School

BMP# YC-016

Richmond Rd.

AutoZone Don't get stranded... build an emergency road kit.

MAPQUEST.

Total Time: 19 minutes **Total Distance: 15.57 miles**

A: 287 McLaws Cir, Williamsburg, VA 23185-5649

START	**1:** Start out going NORTHEAST on MCLAWS CIR.	0.1 mi
	2: Turn RIGHT to stay on MCLAWS CIR.	0.1 mi
WEST 60	**3:** Turn LEFT onto POCAHONTAS TRL/US-60 W.	0.4 mi
RAMP	**4:** Turn LEFT to take the VA-143 ramp toward I-64/RICHMOND/NORFOLK.	0.1 mi
EAST 199	**5:** Merge onto VA-199 E.	1.1 mi
WEST 64	**6:** Merge onto I-64 W toward RICHMOND.	11.4 mi
SOUTH 607	**7:** Merge onto VA-607 S/CROAKER RD via EXIT 231A toward VA-30/NORGE/TOANO.	1.5 mi
EAST 60	**8:** Turn LEFT onto RICHMOND RD/US-60 E.	0.9 mi
END	**9:** End at 7311 Richmond Rd Williamsburg, VA 23188	

B: Norge Elementary School: 7311 Richmond Rd, Williamsburg, VA 23188, (757) 564-3372

Total Time: 19 minutes Total Distance: 15.57 miles

All rights reserved. Use subject to License/Copyright Map Legend
Directions and maps are informational only. We make no warranties on the accuracy of their content, road conditions or route usability or expeditiousness. You assume all risk of use. MapQuest and its suppliers shall not be liable to you for any loss or delay resulting from your use of MapQuest. Your use of MapQuest means you agree to our Terms of Use

ok - 1/28/94
DEC

NORGE SCHOOL SITE PLAN REVIEW COMMENTS; 1/25/94; WNB

BACKGROUND;

IN OCTOBER WE RECEIVED A CONCEPTUAL SKETCH SHOWING ABOUT 2.5 ACRES OF NEW IMPERVIOUS SURFACE. NO DRAINAGE AREA INFORMATION WAS AVAILABLE AT THIS CONCEPTUAL STAGE. WE USED THE IMPERVIOUS AREA FROM THE SKETCH TO ILLUSTRATE THE METHODOLOGY FOR SIZING THE STORMWATER INFILTRATION TRENCH AND SENT THE ILLUSTRATION TO THE ENGINEERS. THE ILLUSTRATION SHOWED A TRENCH WITH THE FOLLOWING DIMENSIONS 100 FT X 65 FT X 5.5 FT DEEP.

IN NOVEMBER WE RECEIVED A CONCEPTUAL SKETCH WITH TOPOGRAPHY FROM WHICH WE ESTIMATED THE DRAINAGE AREA AT 4 ACRES. WE REVISED THE INFILTRATION TRENCH EXAMPLE AND GAVE THE INFORMATION TO THE ENGINEERS. THE REVISED TRENCH DIMENSIONS WERE 100 FT X 100 FT X 5.5 FT DEEP.

IN DECEMBER WE RECEIVED THE SITE PLAN SHOWING (1) THE BMP DRAINAGE AREA AT ABOUT 8 ACRES AND (2) THE INFILTRATION TRENCH APPARENTLY FROM THE OCTOBER EXAMPLE.

SITE PLAN COMMENTS;

1.CHECK INFILTRATION TRENCH DESIGN; USE 2YR STORM; 11 PT BMP.

TR-55

PREDEVELOPMENT CONDITIONS;

4 ACRES;

SOILS; 20B & 34B ; HYDROLOGIC GROUP A

RCN 50 (50-75% GRASS COVER)

TC .5 HRS

Q=1.1 CFS; RO=0.2 IN.

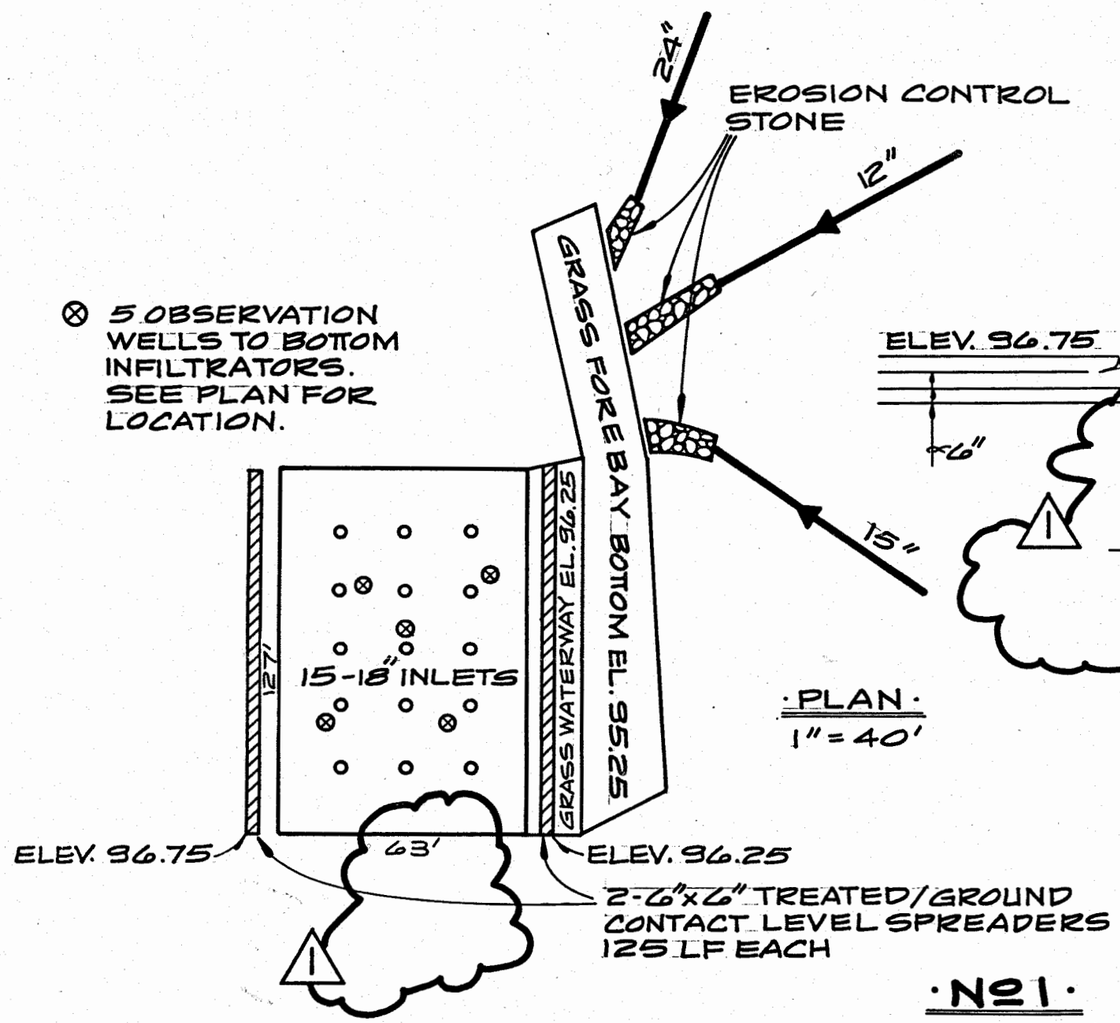

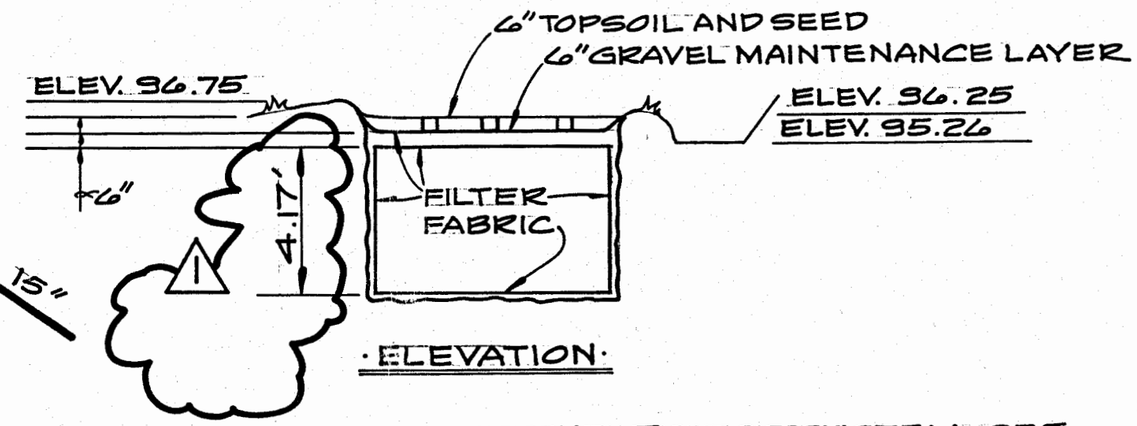

DOUBLE TIER INFILTRATOR SYSTEM; SEE ELEVATION FOR VERTICAL DIMENSIONS AND COMPONENTS.

BOTTOM TIER, 21 ROWS OF HIGH CAPACITY INFILTRATORS 125' FT. LONG EACH. INSTALL 5 OBSERVATION WELLS; ONE WELL IN EACH OF 5 SEPARATE ROWS IN THE BOTTOM TIER AS SHOWN ON SKETCH.

TOP TIER; 41 ROWS OF HIGH CAPACITY INFILTRATORS 62.5 FT. LONG EACH.

·Nº1·

·PLAN AND SECTION·

DOUBLE TIER INFILTRATOR SYSTEM

SCALE: HORIZONTAL 1" = 40'

SECTION A-A

1/16	A	[illegible]	1'-6"	1'-9"	[illegible]	[illegible]	[illegible]	[illegible]	[illegible]	[illegible]	[illegible]
	B	7"	8"	9"	10"	1'-0"	[illegible]	[illegible]	[illegible]	[illegible]	[illegible]
	C	8"	9"	10"	11"	1'-2"	[illegible]	[illegible]	[illegible]	[illegible]	[illegible]
1/8	A	1'-3"	1'-8"	2'-1"	2'-6"	3'-4"	4'-2"	[illegible]	[illegible]	[illegible]	[illegible]
	B	7"	8"	9"	11"	1'-3"	1'-6"	[illegible]	[illegible]	[illegible]	[illegible]
	C	8"	9"	10"	11"	1'-2"	1'-4"	[illegible]	[illegible]	[illegible]	[illegible]

BUTTRESS FOR VERTICAL BENDS

NOTES:

1. ALL CONCRETE TO BE 3000 PSI.
2. BUTTRESS DIMENSIONS SHOWN ARE MINIMUM. DIMENSIONS ARE BASED ON SOIL BEARING PRESSURE OF 3000 PSI AND STATIC WATER PRESSURE IS LESS THAN 3000 PSF SPECIAL BUTTRESS DESIGN IS REQUIRED.

JAMES CITY SERVICE AUTHORITY	
BUTTRESSES & ANCHORAGES FOR VERTICAL BENDS	
DWG NO W 4.0	SCALE : NONE
DWN BY : EMG	DATE : 7-1-89

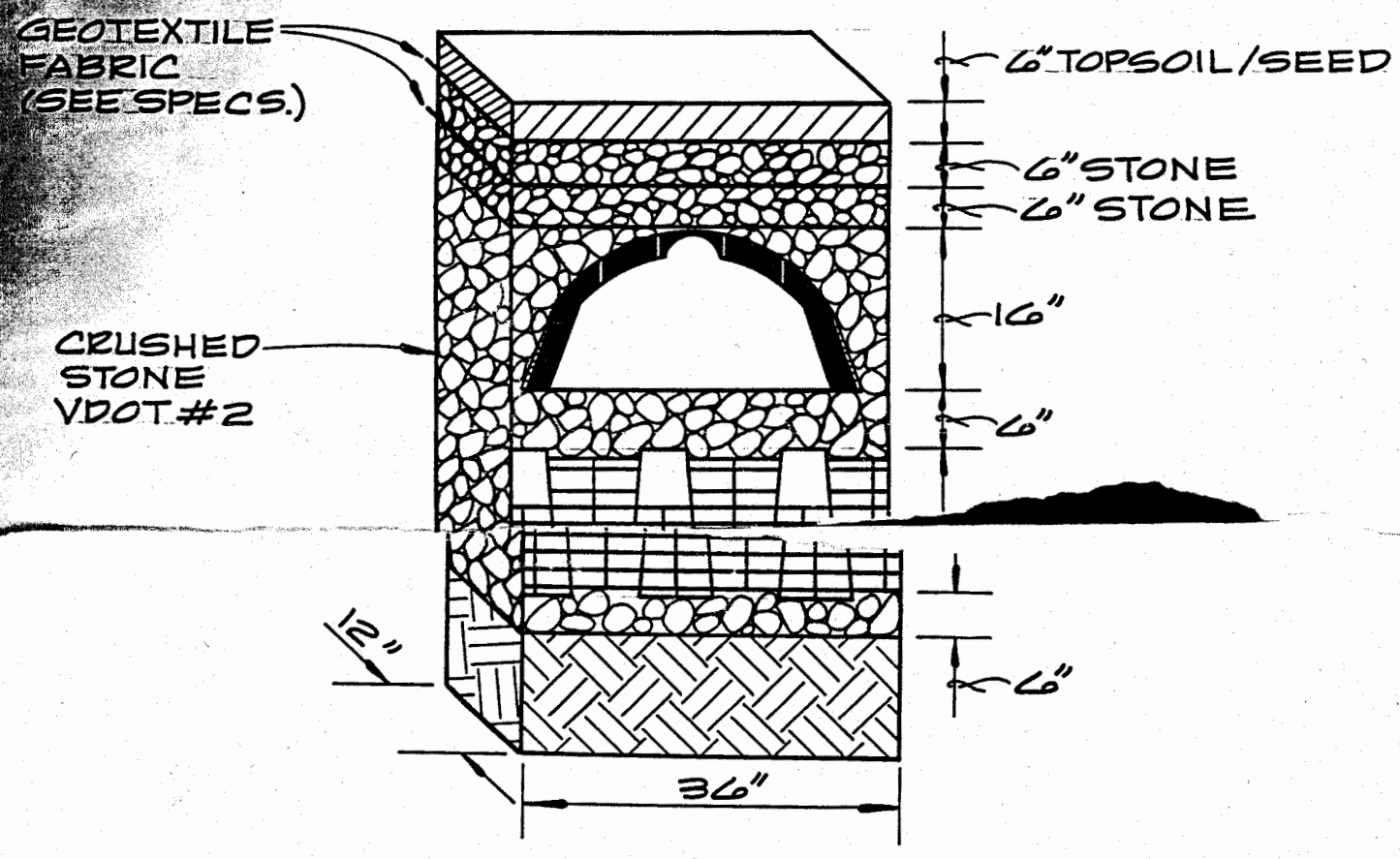

·ELEVATION·

·Nº 1·

·INFILTRATOR CHAMBERS IN TWO LAYERS·

NO SCALE

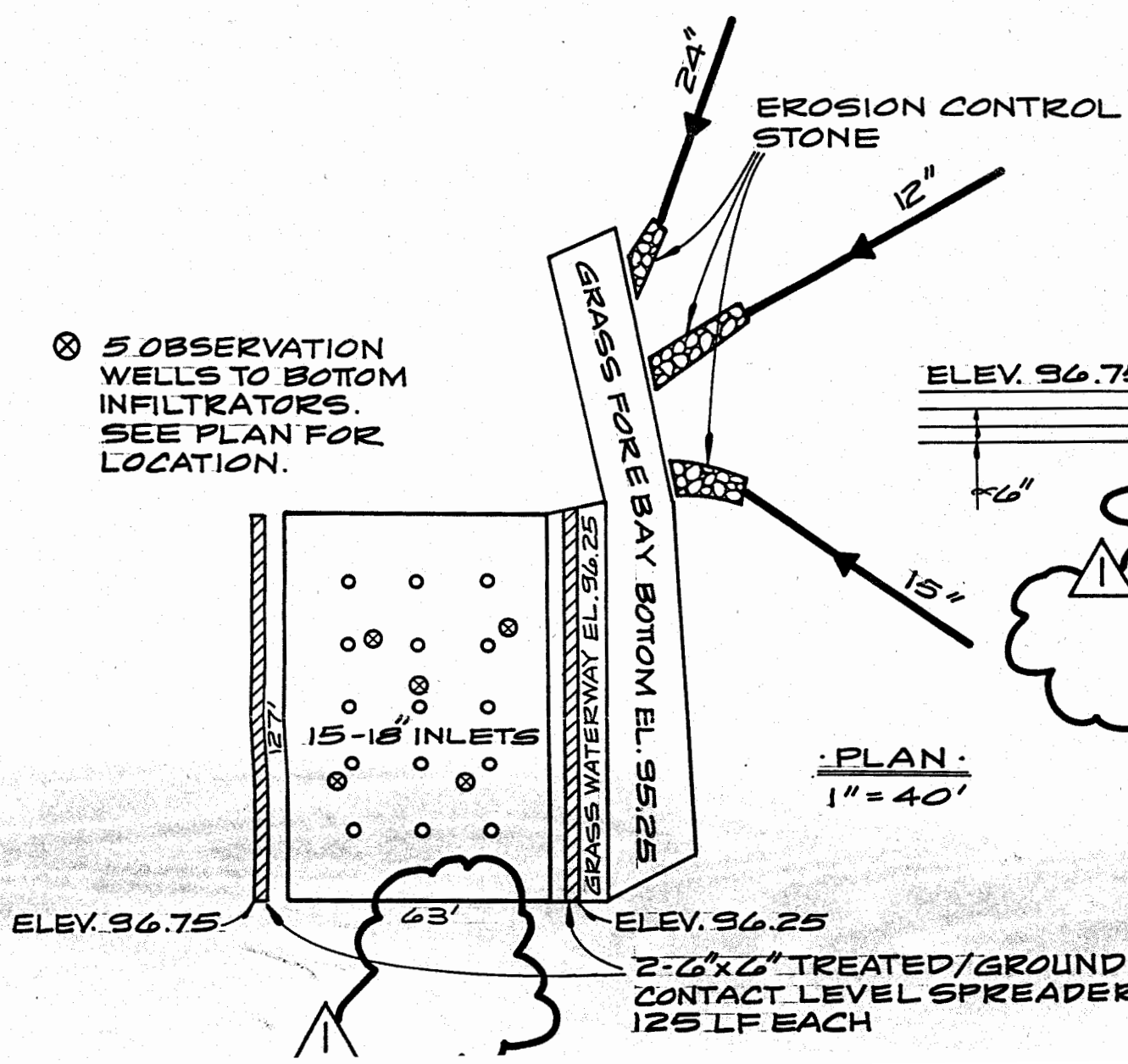

·PLAN·

1" = 40'

·ELE

DOUBLE T
ELEVATI
AND CON

BOTTOM T
INFILTRA
INSTALL
IN EACH
TIER AS

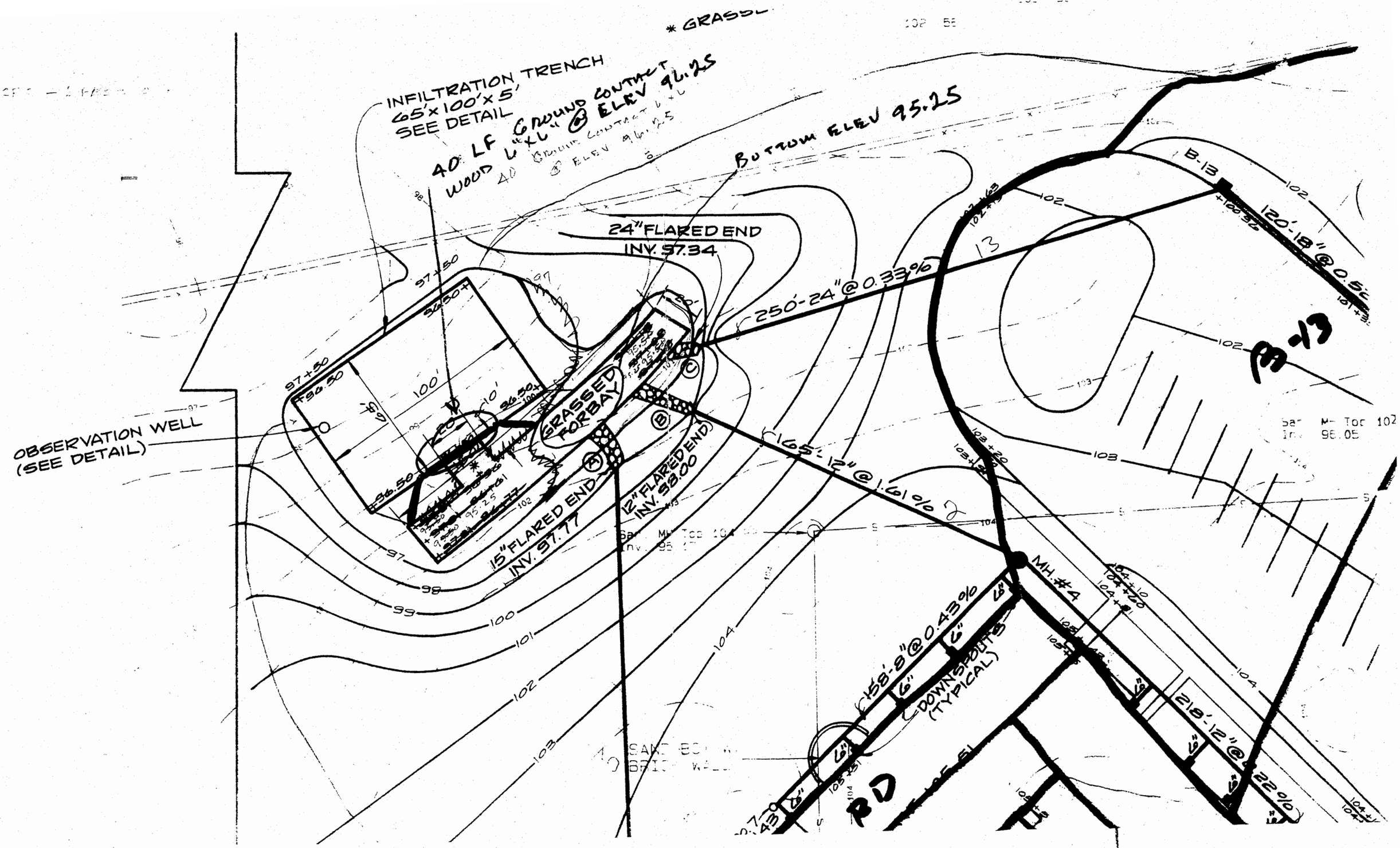
INFILTRATION TRENCH
65'x100'x5'
SEE DETAIL
40 LF GROUND CONTACT
WOOD 6"x6" @ ELEV 96.25
BOTTOM ELEV 95.25
24" FLARED END
INV. 97.34
250'-24" @ 0.33%
B-13
120'-18" @ 0.5
OBSERVATION WELL
(SEE DETAIL)
GRASSED FORBAY
15" FLARED END
INV. 97.77
12" FLARED END
INV. 98.00
165'-12" @ 1.61%
MH #4
158'-8" @ 0.43%
DOWNSPOUTS
(TYPICAL)
218'-12" @ 22%
97+50
100'
102
103
104
98
99
100
101
102
103
104

NOTE:

PROVIDE A BARRIER AT THE ENDS OF EACH STORM SEWER PIPE (~~12"~~, 15" & 24") USE 3 #8 REINFORCING RODS AT EACH LOCATION.

PIPE

NOTE:

SEE DETAIL FOR OBSERVATION WELL AND INLET DRAIN LOCATION.

Ⓐ 4'x 20'x 1.5'
Ⓒ 6'x 25'x 1.5'
DRY RIP RAP CHANNEL CLASS I, 18" DEEP WI RIP RAP BEDDING MAT

GRASSED FORBAY - 20' x 170' ±
* GRASSED WATERWAY - 10' x 40'

102

102 · 56

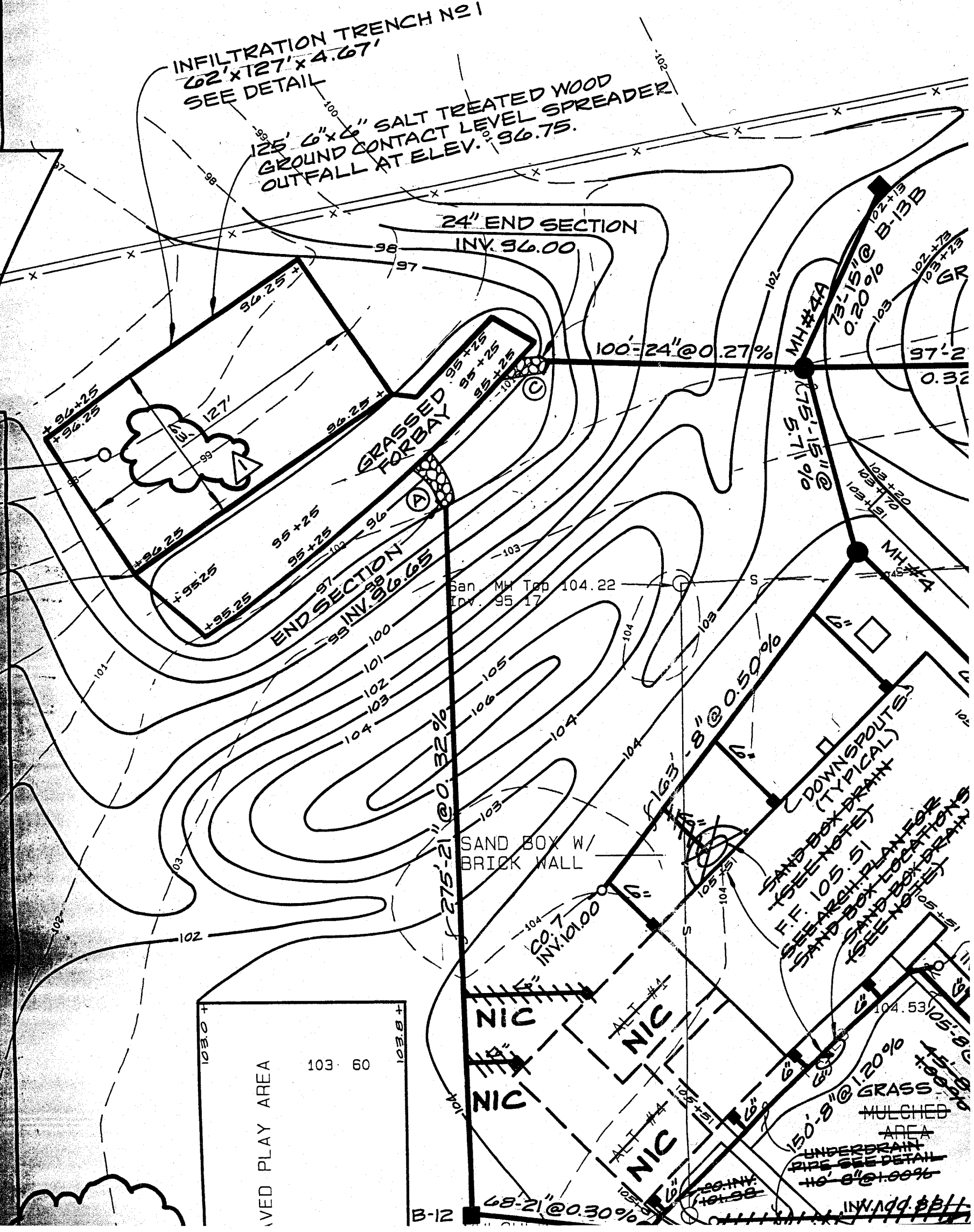

DRAINAGE AREA TO EX. INFILTRATION TRENCHES = 8.000 ACRES

BUILDING IMPERVIOUS IN DRAINAGE AREA = 2.292 ACRES
TRAILER IMPERVIOUS IN DRAINAGE AREA = 0.026 ACRES
ASPHALT, CURBING, AND SIDEWALK IN DRAINAGE AREA = 2.399 ACRES
TOTAL IMPERVIOUS = 4.717 ACRES

OPEN SPACE IN DRAINAGE AREA = 3.283 ACRES

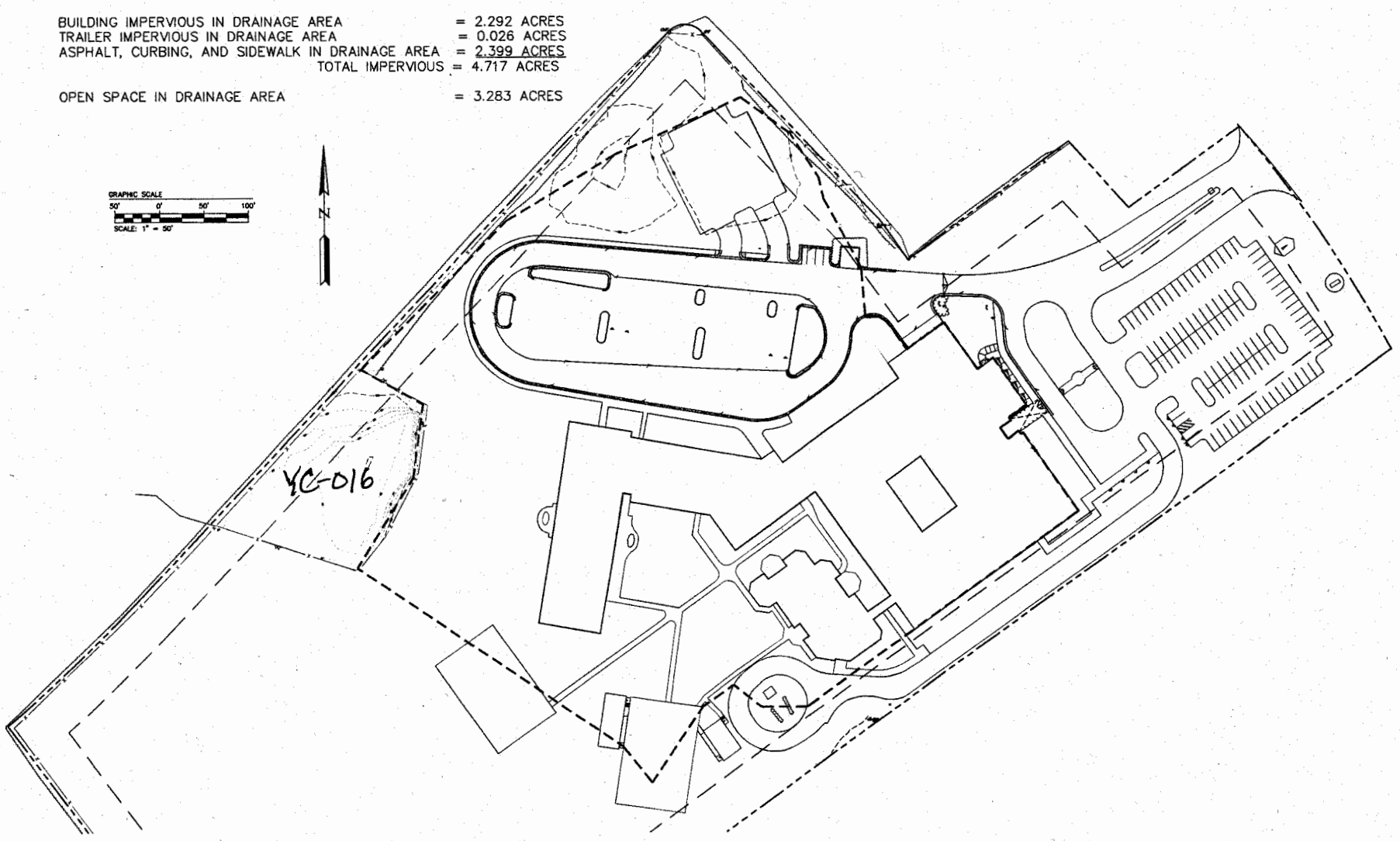

DRAINAGE AREA TO EX. INFILTRATION TRENCHES = 8.000 ACRES

BUILDING IMPERVIOUS IN DRAINAGE AREA = 2.292 ACRES
TRAILER IMPERVIOUS IN DRAINAGE AREA = 0.026 ACRES
ASPHALT, CURBING, AND SIDEWALK IN DRAINAGE AREA = 2.399 ACRES
TOTAL IMPERVIOUS = 4.717 ACRES

OPEN SPACE IN DRAINAGE AREA = 3.283 ACRES

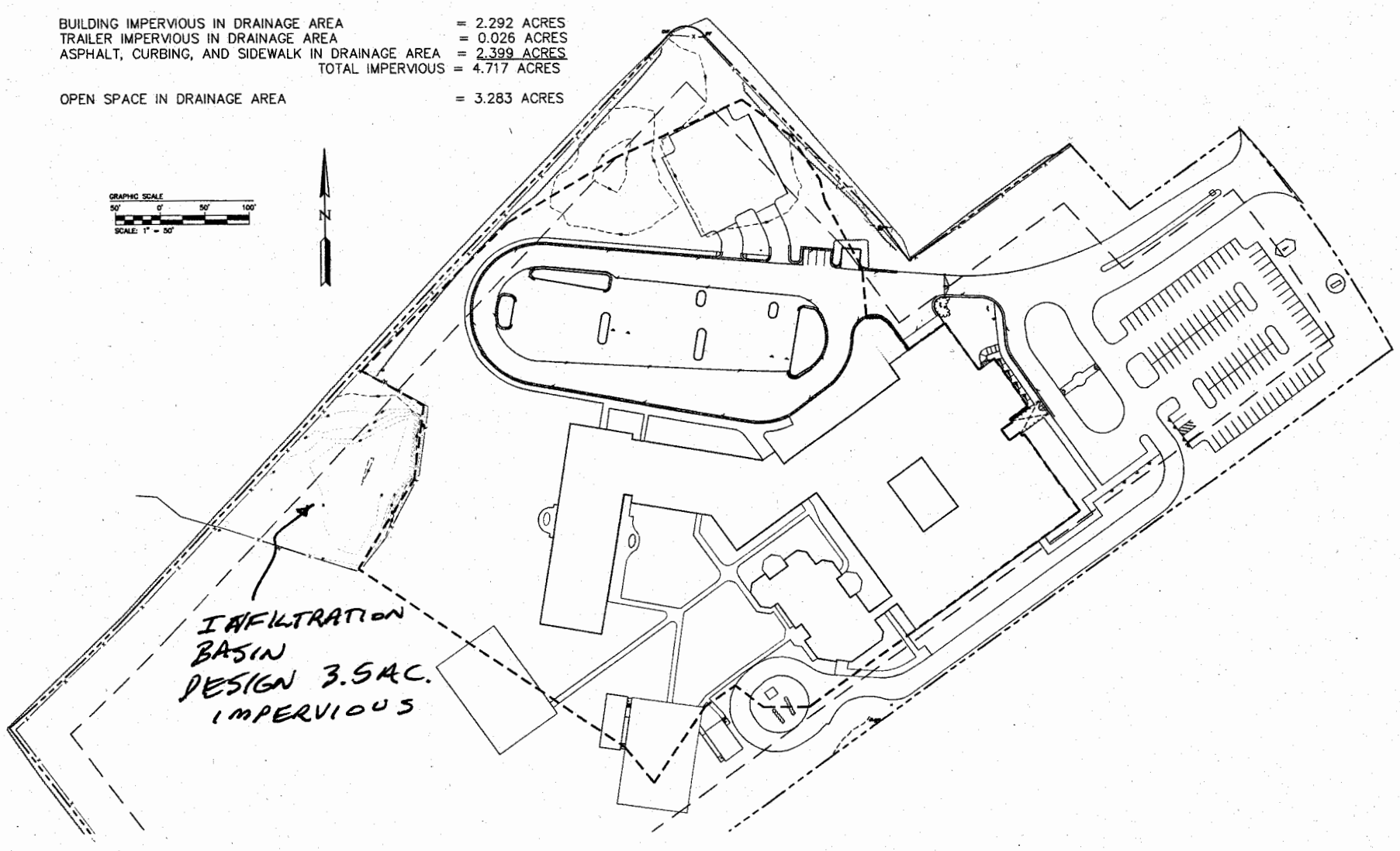

JAMES CITY COUNTY

DEPARTMENT OF DEVELOPMENT MANAGEMENT
P. O. Box 8784
Williamsburg, Virginia 23187-8784

County Government Center, 101-E Mounts Bay Road

Development Manager
(804) 253-6671

Code Compliance
253-6626

County Engineer
253-6678

Planning
253-6685

Integrated Pest Management
253-2820

June 6, 1994

Mr. Doug Westmoreland
Bond Comet Westmoreland & Hiner
207 West Broad Street
Richmond, VA 23220

RE: Case No. SP-132-93. Norge Elementary School - Additions and Renovations

Dear Mr. Westmoreland:

I am pleased to inform you that your site plan received final approval on June 6, 1994. Enclosed are two copies of the stamped final approval drawings, one for your files, the other to be kept on the job site during construction.

Final approval of the site plan shall expire five years after the date of approval. During that period all permits shall be obtained or the development shall be put into use. When the permits have been issued, the site plan approval shall run concurrently with the permits term of validity for only those uses and improvements covered by the permits. All work shall be completed in the manner and location indicated upon the approved plan. Modifications shall be approved in advance by the Zoning Administrator.

Sincerely,

Allen J. Murphy, Jr.
Principal Planner

Enclosures
pc: Bernard Farmer

Fax: (804) 253-6663

BOND
COMET
WESTMORELAND
+ HINER

ARCHITECTS

26 April 1994

Mr. Michael A. Freda
Senior Planner
101-E Mounts Bay Road
P.O. Box 8784
Williamsburg, Virginia 23187-8784

Re: Additions and Renovations to Norge Elementary School
Project No. 9241
7311 Richmond Road
Norge, Virginia

Dear Mr. Freda:

As discussed recently, we are rebidding the above referenced project, and are therefore submitting for approval, a revised Plan of Development package that includes additions, changes and deletions from the prior submittal. We have reviewed your letter with deficiencies noted, and have included any modifications in our re-submittal package. Following is a response to the items you note in your 7 April 1994 letter.

Virginia Department of Transportation

1. (2) sets of the P.O.D. package are being forwarded to VDOT for their review. The infiltration trench that was located below the parking lot has been eliminated, and alternative drainage methods have been reviewed with VDOT, and are included in the revised P.O.D. package.

Health Department

1. The work in the kitchen has been deleted as a part of the revision process.

County Engineer

1. The site plan has been revised to include modified drainage methods that have been discussed with Waylan Bass, John Horne, and representatives from VDOT.

James City Service Authority (JSCA)

1. The "correct" plat description is currently being resolved. A final plat description will be provided as soon as agreed upon.

2. A detail has been included in the re-submittal package showing connection to existing manhole.

3. Water and sewer calculation sheets will be submitted.

4, 5. The geo-thermal loop system has been deleted from the project as a part of the revision process.

Sanford Bond, AIA
Robert E. Comet, Jr., AIA
Douglas D. Westmoreland, AIA
Harry L. Hiner, AIA

Gordon B. Galusha, AIA (retired)
Fred W. Needham, AIA (retired)
Kenneth C. Madlinger, AIA (deceased)

207 West Broad Street
Richmond, Virginia 23220

804/788-4774 fax 788-0986

Sheet C-5

1, 2. These details and notes have been accommodated in the resubmittal.

Planning Division

1. After discussion with our consultant, and given the favorable landscape bid that was received during the initial bid, we have decided to keep the 3 to 3-1/2 inch caliper trees, and the plant schedule as originally submitted (with the exception of the plant material adjacent to the parking lot parallel to Richmond Rd., which has been selected to be compatible with surface water runoff from the parking lot).

2. The multi-purpose fields at the rear of the site are no longer a part of the present construction project, but are to be considered as a part of the P.O.D. approval process for future construction. A partial landscape plan showing the rear portion of the site, the existing tree line, species, and approx. caliper will be included in the resubmittal package. Please advise of future landscaping requirements that will allow the owner to plan for the future work at the multi-purpose fields.

3. A sidewalk has been added, leading from the existing sidewalk at Richmond Rd., and running parallel to the entrance road.

4. The infiltration trench has been eliminated.

The revised bidding documents have been distributed, with bids to be received 10 May 1994. In the interest of advancing the project, we would hope to have a P.O.D. approval by 15 May 1994.

Please advise if there are any other questions or comments that require our response. Your assistance in this matter is greatly appreciated.

Yours truly,

Richard W. Whealan, AIA

Enclosure

cc: Mr. Dave Papenfuse
Mr. Joe Grebb
Mr. Ed Qualtrough
Mr. Doug Westmoreland, AIA
Mr. Charlie Farmer, P.E.
Mr. Keith VanInwegen

DEPARTMENT OF DEVELOPMENT MANAGEMENT
P.O. Box JC
Williamsburg, Virginia 23187-3627

COUNTY GOVERNMENT CENTER, 101E MOUNTS BAY ROAD

Development Manager
(804) 253-6671

Code Compliance
253-6626

County Engineer
253-6678

Planning
253-6685

Integrated Pest Management
253-2620

April 7, 1994

Mr. Doug Westmoreland
Bond, Comet, Westmoreland and Galusha
207 West Broad Street
Richmond, VA 23220

RE: Case No. SP-132-93. Norge Elementary School - Additions and Renovations

Dear Mr. Westmoreland:

The site plans you submitted to our office for review contain the deficiencies noted below. Please address these comments and submit ten revised copies of the site plan for consideration of final approval.

Virginia Department of Transportation

See attached letter.

Health Department

Comments shall be forwarded when received.

County Engineer

Revise the site plan in accordance with our recent discussion concerning the Virginia Department of Transportation's (VDOT) comments.

James City Service Authority (JCSA)

General:

1. Before final site plan approval, provide a plat showing all agreed upon and dedicated easements to JCSA.

2. Provide a detail showing the method of connection to the existing JCSA sanitary sewer manhole.

3. Provide water and sewage data sheets in accordance with JCSA specifications.

   a. Water and sewer average design flow and peak design flows shall be provided if the renovations are increasing existing flows. Separate flows as existing and proposed.

Fax: (804) 253-6663

b. Lengths of water and sewer facilities reported are only those which will be dedicated to JCSA. These lengths are used in the calculations of the JCSA inspection fees.

c. Resubmit revised water and sewer data sheets.

4. JCSA will require an impact analysis by an expert and professional in the field of groundwater systems to be performed on this site unless you provide to Mr. Larry M. Foster, JCSA General Manager, in writing, stating the following:

a. By your professional opinion based on your experience and expertise in the field of groundwater systems, there is absolutely no possibility of contamination of any kind resulting from the construction and/or daily operations of the geothermal heat exchange system on JCSA and/or James City County private well owners.

b. By your professional opinion, there will be absolutely no need of a mitigation plan for impacted JCSA and/or privately owned wells due to the construction and/or daily operations of the geothermal heat exchange system.

c. By your professional opinion there will be no contamination from an accidental spillage of sewage from the existing JCSA sewer system on the groundwater system from the construction of the geothermal loops in close proximity of the existing sanitary sewer system.

5. Provide details and specifications on the geothermal well construction, installation and maintenance. JCSA has not been provided with the contract documents. JCSA will also require detail layout drawings of the geothermal loops.

<u>Sheet C-5</u>:

1. Provide more information on the plans on how to plug and abandon the existing sanitary sewer line from the existing septic tank to protect JCSA from inflow/infiltration.

2. Provide a note to state the following:

a. Connections to the existing JCSA water and sanitary sewer require the Contractor to provide JCSA with 48 hours notice.

b. Connections to JCSA water and sanitary sewer facilities shall be witnessed by a JCSA Inspector.

c. The existing 10-inch sanitary sewer line to be removed only after JCSA has accepted the proposed 10-inch sanitary sewer relocation.

d. Diverting of sanitary sewer flows must be approved by a JCSA Inspector prior to a diversion.

Planning Division

1. Some of the trees listed on the plant materials list are 3 to 3-1/2 inch caliper. The Zoning Ordinance does not require that the trees be this large. Trees only need to be 8 feet in height. Some of the trees are taller. Trees of this size are very expensive. Additional cost savings can be made by choosing inexpensive plant materials that have the same landscape effect. It is recommended these trees be reduced in size and that the plant list be reviewed to reduce the cost of the plants.

2. Because the entire site is being redeveloped, including the grading of the playing fields at the rear of the site, the perimeters of the site must be landscaped. These perimeters contain existing trees which may be counted towards meeting the tree requirements of the Landscape Ordinance. Show these existing trees on the landscape plan. Consult staff to discuss the plants required for the perimeter landscape areas.

3. A sidewalk is located along the front of the property. To allow children access from this sidewalk to the school, it is recommended that a sidewalk be placed adjacent to the entrance road.

4. If an infiltration proposed is to be proposed at the front of the site, this must be discussed with the Planning Division first. Please contact me if this option is chosen.

Preliminary site plan approval is valid for a period of one year from the date of preliminary approval. The above-referenced site plan received preliminary approval on February 28, 1994. The site plan must be resubmitted and receive final approval by the Zoning Administrator by February 28, 1995, or the plan becomes void.

If you have any questions, please contact me.

Sincerely,

Michael A. Freda
Senior Planner

MAF/bkh
westmore.ltr

cc: David Papenfuse

RECEIVED 12-94

TRANSMITTAL

RECEIVED PLANNING DEPARTMENT

DATE: March 15, 1994

TO CC FIRE HEALTH VDOT
C. ENG JCSA

FROM: Mike Freda, Senior Planner

SUBJECT: SP-132-93. Norge Elementary School - Addition and Renovations

ITEMS ATTACHED: Revised site plan, comments response letter

INSTRUCTIONS: Please review and comment or sign plan and transmittal as approved.

RETURN BY: 3/24/94.

AGENCY COMMENTS:

1. Provide several small, polyethylene storm drain inlets connected by perforated pipe to allow water into and to be distributed within the infiltration trench #1.
2. Provide an observation well in infiltration trench #2. Also, provide the depth dimension for the trench.
3. Provide sediment trapping / trash protection for the ~~inlets~~ manholes 6 and 7 that pipe water into infiltration trench #2. This needs to include turndown elbows on pipes into the trench to eliminate as much material from entering the trench as possible.

Sheets C-10 + C-11 which were not included in 3/15/94 submission ~~did not~~ address the above comments. Then approved 3/29/94 DEC

DEC 3/23/93

BOND
COMET
WESTMORELAND
+ HINER

7 March 1994

Mr. Michael A. Freda
Senior Planner
101-E Mounts Bay Road
P.O. Box 8784
Williamsburg, Virginia 23187-8784

Re: Additions and Renovations to Norge Elementary School
Project No. 9241
7311 Richmond Road
Norge, Virginia

Dear Mr. Freda:

Please find enclosed ten (10) copies of the revised POD submittal for your review and approval. The responses below summarize the drawing revisions made, per your review comments of February 2, 1994:

Memorandum, February 2, 1994 from M. Freda to Development Review Committee:

As discussed in the staff/developer conference, with the County purchase of the adjacent land to the west of the site for a future park, the requirement to provide a landscape buffer on this side will be waived. A buffer has been provided on the east side of the site at the new paved play area.

Virginia Department of Transportation:

1. Incorporated in revised drawings.

2. Incorporated in revised drawings.

3. Incorporated in revised drawings.

4. Incorporated in revised drawings.

5. Footcandle display for site lighting has been included in the revised drawings.

6. Incorporated in revised drawings.

7. The Owner has indicated that these trees should be planted in the bus parking lot.

8. The deciduous shade trees on the plant list have been changed to 2 1/2" to 3" caliper. The plants specified are not expensive and can be found at a number of local nurseries.

9. Incorporated in revised drawings.

Sanford Bond, AIA
Robert E. Comet, Jr., AIA
Douglas D. Westmoreland, AIA
Henry L. Hiner, AIA

Gordon B. Galusha, AIA (retired)
Fred W. Needham, AIA (retired)
Kenneth G. Machey, AIA (deceased)

207 West Broad Street
Richmond, Virginia 23220

804/788-4774 FAX 788-0986

ARCHITECTS

10. Landscaping adjacent to the building has been calculated assuming the largest possible building footprint.

Fire:

1. Incorporated in revised drawings.

2. Incorporated in revised drawings.

Code Compliance:

1. This will be provided by the Contractor.

2. This will be executed by the Owner.

3. This will be provided at the completion of the infiltration trench.

4. Incorporated in revised drawings.

5. Incorporated in revised drawings.

6. Incorporated in revised drawings.

7. Incorporated in revised drawings.

8. Incorporated in revised drawings.

9. This will be provided.

James City Service Authority:

General:

1. Incorporated in revised drawings.

2. Incorporated in revised drawings.

3. This will be provided.

4. Incorporated in revised drawings.

5. Incorporated in revised drawings.

6. Incorporated in revised drawings.

7. Incorporated in revised drawings.

8. Incorporated in revised drawings.

9. General response: It is our position that an engineering impact analysis is not required for this project. The type of geothermal system indicated in the construction documents is of a commonly utilized and proven design. This type of system is currently installed in various facilities throughout the county including Clara Byrd Baker Elementary School. This same system was approved for use at Lafayette High School, but was not implemented.

The private well regulations VR-355-34-100, as set forth by the Bureau of Sewage and Water Services, Commonwealth of Virginia, Department of Health, have been utilized as the design guidelines for this project and are listed in the contract specifications as a requirement.

a. We do not foresee an impact to the JCSA wells during the installation and operation of the system. The distance from the virtual heat exchanger and the adjacent wells exceeds the distance defined in the private well regulations.

b. We do not foresee an impact to the privately owned wells adjacent to the site.

c. We do not foresee an impact to the water quality during construction and operation of the virtual heat exchanger. No manmade muds or liquids are specified or will be allowed on this project.

d. We do not foresee an impact on the ground water quality from exposure to leakage of geothermal fluid. The heat exchange system is warranted for 50 years by the manufacturer against defects. The installing contractors are certified for this type of installation. The manufacturer's literature indicates that the material has a service life of approximately 200 years. When the system is properly installed, there should not be a question of system leakage. As a matter of precaution, the heat transfer fluid shall be water containing an initial dose of environmentally safe chemicals to treat the system.

e. No mitigation plan is submitted because we do not foresee any of the wells being impacted.

f. The details and specification of the well construction and installation are listed in the contract documents.

g. All chemicals used will be submitted to JCSA for review prior to usage..

h. Pressure sensors and make-up water flow switches have been added to the system. These components have been integrated with the building automatic temperature control system to provide a remote alarm at the county maintenance office.

<u>Sheet C-5:</u>

1. Incorporated in revised drawings.

2. Incorporated in revised drawings.

3. Incorporated in revised drawings.

<u>Sheet C-6:</u>

1. Incorporated in revised drawings.

<u>Health Department:</u>

1. We have complied with these requirements.

2. The locations have been coordinated and the plastic lines shall have a foil locating tape installed at a specified distance above the piping for easy location.

3. The installing contractor shall obtain all necessary permits.

4. The installing contractor shall obtain all necessary permits.

County Engineer:

1. Incorporated in revised drawings.

2. Incorporated in revised drawings.

3. Incorporated in revised drawings.

Department of Transportation, letter of January 26, 1994 from Quinton Elliot to Marvin Sowers:

1. Incorporated in revised drawings.

2. Incorporated in revised drawings.

3. Incorporated in revised drawings.

4. Incorporated in revised drawings.

5. Incorporated in revised drawings.

6. Incorporated in revised drawings.

7. Incorporated in revised drawings.

If you have any questions or comments concerning these revisions, please do not hesitate to call. We have advertised this project for bids to be received March 29, 1994, with construction beginning as early as April 15, 1994. Thank you for your help with this submittal.

Sincerely,

Douglas D. Westmoreland AIA

DDW:

enclosure

cc: Joe Grebb, WJCC
Dave Papenfuse, WJCC
Rich Whealan, AIA, BCW+H

W:\text\9241\corr\freda.001

JAMES CITY COUNTY

DEPARTMENT OF DEVELOPMENT MANAGEMENT
P. O. Box 8784
Williamsburg, Virginia 23187-8784

County Government Center, 101-E Mounts Bay Road

Development Manager
(804) 253-6671

Code Compliance
253-6626

County Engineer
253-6678

Planning
253-6685

Integrated Pest Management
253-2620

February 28, 1994

Mr. Doug Westmoreland
Bond Comet Westmoreland & Galusha
207 West Broad Street
Richmond, VA 23601

RE: SP-132-93. Norge Elementary School - Additions and Renovations

Dear Mr. Westmoreland:

I am pleased to inform you that your site plan has received preliminary approval contingent upon the conditions listed below. Please resubmit ten copies of the revised drawings for consideration of final approval.

Virginia Department of Transportation

Comments shall be forwarded when provided.

Planning Division

1. Indicate the total amount and percentage of open space on the site.

2. Indicate the height of the building in feet.

3. Remove the south entrance which is to be closed.

4. The County Zoning Ordinance requires that handicap parking spaces be 9 feet wide. Add one foot to each handicap space.

5. Provide footcandle display for the lighting plan.

6. Indicate the zoning of the site on the site plan.

7. Some of the trees listed on the plant materials list are 3 to 3-1/2 inch caliper. The Zoning Ordinance does not require that the trees be this large. Trees of this size are very expensive. Additonal cost saving can be made by choosing inexpensive plant materials that have the same landscape effect. It is recommended these trees be reduced in size and that the plant list be reviewed to reduce the cost of the plants.

Fax: (804) 253-6663

8. The site shows 118 parking spaces and the DRC approved that number for the school. Change the parking calculations on the site plan. This would also change the parking lot calculations on the landscape plan.

9. If the alternate building additions are to be approved as part of the site plan, they must be landscaped in accordance with the Landscape Ordinance.

10. Because the entire site is being redeveloped, including the grading of the playing fields, at the rear of the site, the perimeters of the site must be landscaped. These perimeters contain existing trees which may be counted towards meeting the tree requirement of the Landscape Ordinance. Indicate these existing trees on the landscape plan. Consult staff to discuss the plants required for the perimeter landscape areas.

Fire

1. Relocate Fire Department connection valve pit to grassy area next to fire hydrant.

2. Move dumpster to a minimum of 15 feet away from building.

Code Compliance

1. A Land Disturbing Permit and Siltation Agreement, with surety, are required for this project.

2. An Inspection/Maintenance Agreement shall be executed with the County for the BMP facility for this project.

3. As-built drawings must be provided for the infiltration trench upon completion.

4. On Sheet C-6, provide silt fence on the west side of the sewer construction for the 300 foot section to be installed on this page.

5. Locate the observation well in the center of the infiltration trench rather than at the side.

6. Instead of having open stone to the surface, cover the infiltration trench with a minimum of 6 inches of vegetated topsoil. The soil must be separated from the stone by filter fabric. Provide several small, polyethylene inlets connected by perforated pipe to allow water into and distributed within the trench. Revise the detail on C-9 as necessary.

7. Replace the Erosion Control Notes on Sheet C-9 with the notes of the latest version of the Erosion Control Handbook.

8. Because of the three-foot depth of standing water, a safety fence is needed around the sediment traps to prevent entry by the school children.

9. Provide calculations that demonstrate the adequacy of the existing storm drain system to receive the drainage from the revised storm drainage system for the parking lot.

James City Service Authority

General

1. Label water and sewer facilities as follows: existing, proposed, to be abandoned, abandoned, and who owns which facilities.

2. Show all existing and proposed JCSA easements.

3. Before final site plan approval provide recorded plat showing all agreed upon dedicated easements to JCSA.

4. Add JCSA water and sewer general notes to the plans.

5. Provide a detail showing the method of connection to the existing JCSA sanitary sewer manholes.

6. Provide profiles for all water lines 4" and larger and all JCSA sewer lines. Profiles shall include storm sewer, geothermal lines and other services that cross these facilities.

7. Profile all JCSA standard details required to constuct these facilities.

8. Provide Water and Sewage Data Sheets in accordance with JCSA Specifications.

9. Provide an engineering impact analysis on the geothermal loop to address the following concerns:

   a. Potential impact on existing JCSA wells during construction and during operations.

   b. Potential impact on existing privately owned deep and shallow wells during construction and during operations.

   c. Potential impact on water quality during construction and operations.

   d. Potential impact to ground water quality from exposure to leakage of geothermal heat transfer fluid.

   e. Mitigation plan for impacted wells.

   f. Details and specification on well constuction, installation and maintenance.

g. Environmental impacts, chemical composition, and toxicity level of heat transfer fluid.

h. Leak detection system and capabilities including maintenance and repair of the geothermal system.

Sheet C-5:

1. Provide a detail for disconnecting existing septic tank.

2. Reroute fire hydrants and fire line to come out the detector check. Evaluate whether the size 12" water main is required between JCSA existing 16" water main and the detector check.

3. Sanitary sewer line from new manhole #2 on C-5 shows an 8" line. C-6 shows a 10" line. Correct.

Sheet C-6:

1. Adjustments to the tops of existing manholes shall be done in accordance with JCSA Specs.

Health Department

1. The vertical loops for the closed loop heat pump system are governed by the Commonwealth of Virginia Private Well Regulations and permits must be obtained from the local Health Department prior to installation. The regulations require that the installations of the vertical loops be installed in a manner that will prevent ground water contamination, including termite treated foundations, building sewers, and sewage mains. Methods of protection include separation distances from these sources of pollution and grouting requirements. As proposed the location of the heat system loop field can meet the requirements of the regulations, but requirements for grouting may include grouting to the bottom of each loop. Further details may be obtained from the Health Department.

2. It is recommended that the field be relocated so that no sewer lines, water lines or other underground utilities are located within the field. This may prevent future damage if excavation is required for repairs to any of the systems, and decreases the chances of groundwater pollution from the sewers.

3. To obtain Health Department permits for the heat pump wells, please submit an application, detailed site plan of each proposed boring, and applicable fee payment directly to the JCC Health Department. Allow at least two weeks for issuance of permit after application is received.

4. The plans are approved with the understanding that construction permits for the wells are obtained.

County Engineer

In October, we received a conceptual sketch showing about 2.5 acres of new impervious surface. No drainage area information was available at this conceptual stage. We used the impervious area from the sketch to illustrate the methodology for sizing the stormwater infiltration trench and sent the illustration to the engineers. The illustration showed a trench with the following dimensions: 100 ft. x 65 ft. x 5.5 ft. deep.

In November, we received a conceptual sketch with topography from which we estimated the drainage area at 4 acres. We revised the infiltration trench example and gave the information to the engineers. The revised trench dimensions were 100 ft. x 100 ft. x 5.5 ft deep.

In December, we received the site plan showing (1) the BMP drainage area at about 8 acres and (2) the infiltration trench apparently from the October example.

Site Plan Comments:

1. Check infiltration trench design; use 2 year storm; 11 Pt. BMP TR-55.

Predevelopment Conditions:

4 acres; soils; 20B & 34B; Hydrologic Group A, RCN 50 (50-75% grass cover); TC .5 hrs; Q = 1.1 CFS; RO = 0.2 in.

Post Development Conditions:

8 Acres total contains 3.5 acres impervious cover. RCN 71 = (3.5 x 98) + (4.5 X 50) / 8; TC 0.15 hrs; Q = 11 CFS; RO - 1.1 in.

Stone storage required 0.4 ACFT. 0.59 inc.

Stone trench volume required 0.4/.4 - 1.0 ACFT.
1.0 ACFT. - 43560 CFT.

123 ft. x 65 ft. x 5.5 ft. deep = 43973 CFT. Use these dimensions if stone filled trench is selected by appicant.

Suggestion: using high capacity "infiltrators" / stone combination per attached sketch will reduce trench size to 100 ft. x 62.5 ft. x 4.67 ft.

2. Add 100 LF 6" x 6" wood ground contact level spreader outfall to infiltration trench at elevation 96.50.

3. Grassed forebay; recommend bottom elevation at 95.25; recommend 40 LF of ground contact wood 6" x 6" top elevation at 96.25; sketch attached.

Preliminary site plan approval is valid for a period of one year, until February 28, 1995, during which time a final site plan must be submitted and receive final approval by the Zoning Administrator prior to the termination date of the preliminary approval. Final site plan approval is required before construction may begin.

If you have any questions, please contact me.

Sincerely,

Michael A. Freda
Senior Planner

MAF/cg

CODE COMPLIANCE REVIEW COMMENTS
NORGE ELEMENTARY SCHOOL MODIFICATIONS
PLAN NO. SP-132-93
January 5, 1994 DEC

1. A Land Disturbing Permit and Siltation Agreement, with surety, are required for this project.

2. An Inspection/Maintenance Agreement shall be executed with the county for the BMP facility for this project.

3. As-built drawings must be provided for the infiltration trench on completion.

4. On sheet C-6, provide silt fence on the west side of the sewer construction for the 300 foot section to be installed on this page.

5. Locate the observation well in the center of the infiltration trench rather than at the side.

6. Instead of having open stone to the surface, cover the infiltration trench with a minimum of 6 inches of vegetated topsoil. The soil must be separated from the stone by filter fabric. Provide several small, polyethylene inlets connected by perforated pipe to allow water into and distributed within the trench. Revise detail on C-9 as necessary.

7. Replace the Erosion Control Notes on sheet C-9 with the attached set that reference the latest version of the Erosion Control Handbook.

8. Because of the three-foot depth of standing water, a safety fence is needed around the sediment traps to prevent entry by the school children.

9. Provide calculations that demonstrate the adequacy of the existing storm drain system to receive the drainage from the revised storm drainage system for the parking lot.

10. The size of the infiltration trench needs to be increased to control the 2-year storm to pre-developed levels. Storage volume of 0.5 ac. ft. is required or 1.25 ac. ft. of stone storage.

Barry Moses

From: Abbott, Bruce [bruce.abbott@aesva.com]
Sent: Monday, November 05, 2007 8:54 AM
To: Barry Moses; Scott Thomas
Cc: ROBERTSONA@wjcc.k12.va.us; Bennett, Marc; Richardson, Mark A
Subject: Norge Parking

Gentlemen
After our brief meeting Friday this is my understanding of this project.
1. The BMP needs to be looked at by opening some of the observation wells. (This is something the School system and County need to coordinate and should become a CIP project if corrections are needed). I have made Alan Robertson aware of this matter.
2. With the statement above, I got the sense that we can move ahead in completing this project using the swale and stone diaphragm. Therefore can we resubmit for final approval?

Please let me know if you concur with this approach.
Thanks

L. Bruce Abbott
Project Engineer

AES Consulting Engineers
Williamsburg | Richmond | Gloucester
(757) 253-0040
www.aesva.com

AES Consulting Engineers Confidentiality Note: This e-mail and any attachments are confidential and may be protected by legal privilege. If you are not the intended recipient, be aware that any disclosure, copying, distribution or use of this e-mail or any attachment is prohibited. If you have received this e-mail in error, please notify us immediately by returning it to the sender and deleting this copy from your system. Thank you for your cooperation.

(11-2)(7-1)

HILCKOKY HILL

S-065-05
S-066-05

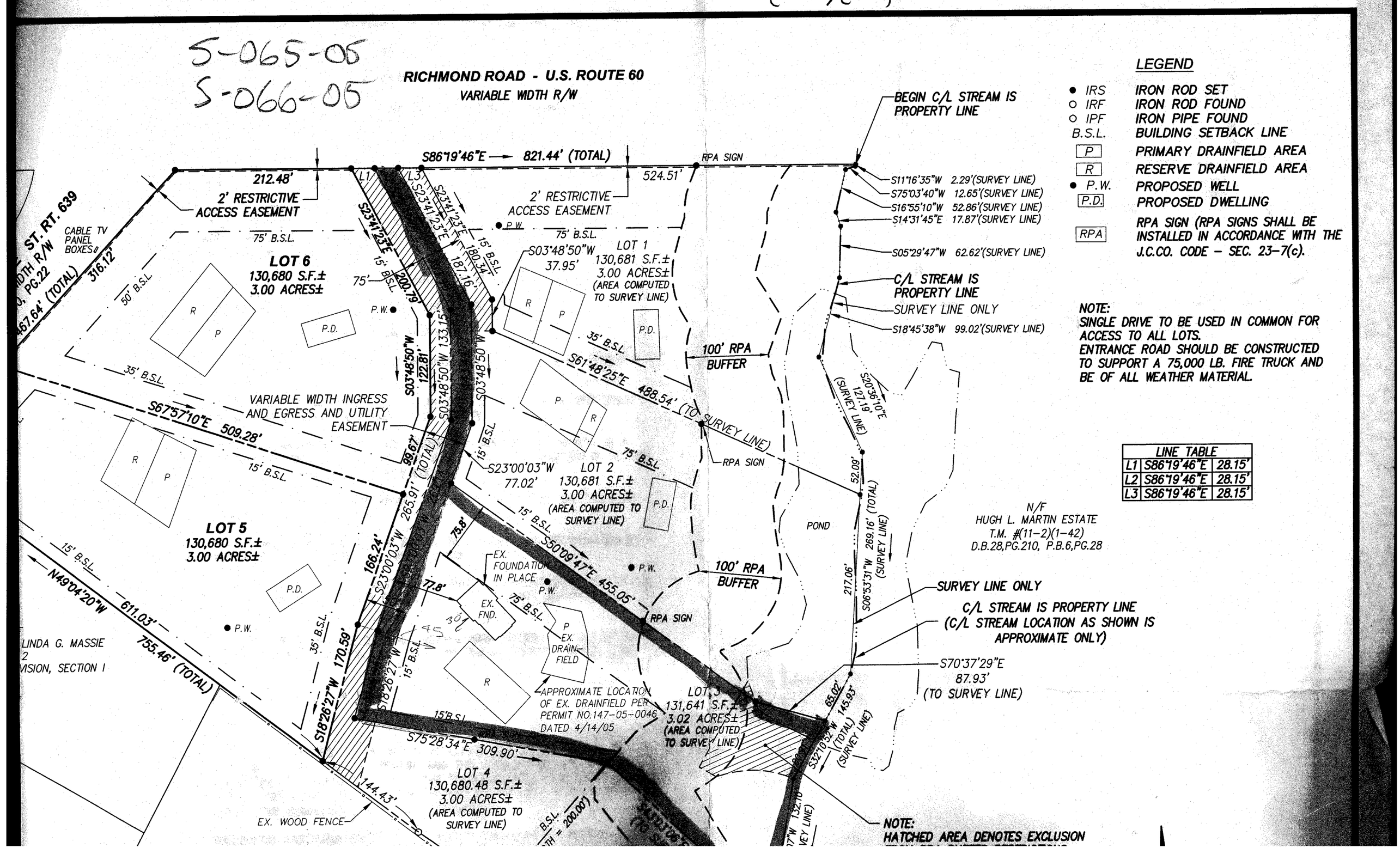

LEGEND

● IRS	IRON ROD SET
○ IRF	IRON ROD FOUND
○ IPF	IRON PIPE FOUND
B.S.L.	BUILDING SETBACK LINE
P	PRIMARY DRAINFIELD AREA
R	RESERVE DRAINFIELD AREA
● P.W.	PROPOSED WELL
P.D.	PROPOSED DWELLING
RPA	RPA SIGN (RPA SIGNS SHALL BE INSTALLED IN ACCORDANCE WITH THE J.C.CO. CODE – SEC. 23-7(c).

NOTE:
SINGLE DRIVE TO BE USED IN COMMON FOR ACCESS TO ALL LOTS.
ENTRANCE ROAD SHOULD BE CONSTRUCTED TO SUPPORT A 75,000 LB. FIRE TRUCK AND BE OF ALL WEATHER MATERIAL.

LINE TABLE		
L1	S86°19'46"E	28.15'
L2	S86°19'46"E	28.15'
L3	S86°19'46"E	28.15'

Barry Moses

From: Abbott, Bruce [bruce.abbott@aesva.com]
Sent: Wednesday, October 31, 2007 3:13 PM
To: Barry Moses; Scott Thomas
Cc: Richardson, Mark A; ROBERTSONA@wjcc.k12.va.us
Subject: Norge parking lot expansion
Attachments: 981308B-drainbase.pdf

Barry
Please find attached dwg showing impervious areas and open space that we can best determine to be connected to infiltration trenches.

L. Bruce Abbott
Project Engineer

AES Consulting Engineers
Williamsburg | Richmond | Gloucester
(757) 253-0040
www.aesva.com

AES Consulting Engineers Confidentiality Note: This e-mail and any attachments are confidential and may be protected by legal privilege. If you are not the intended recipient, be aware that any disclosure, copying, distribution or use of this e-mail or any attachment is prohibited. If you have received this e-mail in error, please notify us immediately by returning it to the sender and deleting this copy from your system. Thank you for your cooperation.

DRAINAGE AREA TO EX. INFILTRATION TRENCHES = 8.000 ACRES

BUILDING IMPERVIOUS IN DRAINAGE AREA = 2.292 ACRES
TRAILER IMPERVIOUS IN DRAINAGE AREA = 0.026 ACRES
ASPHALT, CURBING, AND SIDEWALK IN DRAINAGE AREA = 2.399 ACRES
TOTAL IMPERVIOUS = 4.717 ACRES

OPEN SPACE IN DRAINAGE AREA = 3.283 ACRES

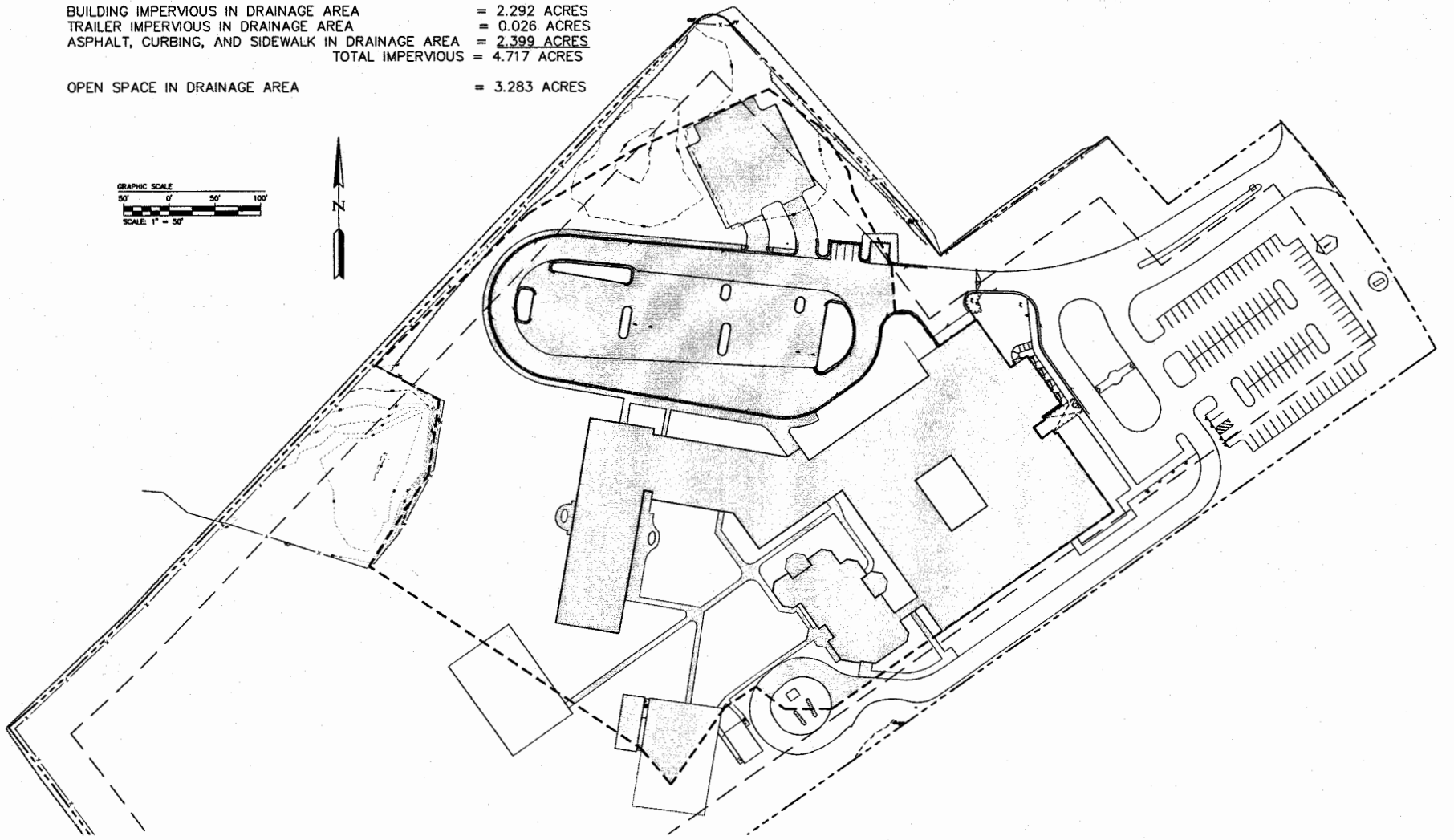

SP-132 93

ADDITIONS AND ALTERATIONS TO

NORGE ELEMENTARY

WILLIAMSBURG–
JAMES CITY COUNTY
PUBLIC SCHOOLS

P.O.D SUBMITTAL

17 DECEMBER 1993
RESUBMITTED 7 MARCH 1994
1 REVISED 25 APRIL 1994

NORGE, VIRGINIA

STATE PROJECT 131-7C

BOND
COMET
WESTMORELAND
+HINER
ARCHITECTS
207 West Broad Street
Richmond, Virginia 23220
804/7 8 6-4 6 7 7 4

PRELIMINARY	12/17/93
25%	1/10/94
50%	2/14/94
75%	3/7/94
90%	3/24/94
100%	6/16/94
1	6/21/94
2	7/6/94
3	7/8/94

CONSULTANTS

CIVIL
AUSTIN BROCKENBROUGH
4900 WEST HUNDRED ROAD
CHESTER, VIRGINIA 23832

MECHANICAL, ELECTRICAL, PLUMBING
ECI ENGINEERS
3005 DOCK LANDING DRIVE
CHESAPEAKE BUILDING
SUITE 1
NEWPORT NEWS, VIRGINIA 23606

STRUCTURAL
R&F
340 S. RICHARDSON RD
SUITE E
ASHLAND, VIRGINIA 23005

LANDSCAPE
HIGGINS ASSOCIATES, INC.
8501 PATTERSON AVE.
RICHMOND, VIRGINIA 23229

© Bond Comet Westmoreland + Hiner Architects, Inc.

PROJECT NUMBER
9241

PROJECT MANAGER
RWW

DRAWN BY
EJR

ISSUE DATE
17 DECEMBER 1993

REVISIONS
RESUBMITTED
7 MARCH 1994
1 REVISED
25 APRIL 1994

P.O.D. SUBMITTAL

SHEET TITLE
TITLE SHEET

SHEET NUMBER
T-1

ABBREVIATIONS

ABV	above	FCU	fan coil unit	PVMT	pavement
AFF	above finished floor	FEC	fire extinguisher cabinet	PR	pair
ACT	acoustical tile	FA	fire alarm	PERIM	perimeter
ACC	acoustic (al)	FLASH	flashing	PLAS	plaster
AESS	architectural exposed structural steel	FLR	floor (ing)	PLAM	plastic laminate
AHU	air handling unit	FD	floor drain	PL	plate
AHU	air handling unit	FLUOR	fluorescent	PLYWD	plywood
ALUM	aluminum	FT	foot or feet	PVC	polyvinyl chloride
AB	anchor bolt	FTG	footing	PCF	pounds per cubic foot
APPROX	approximate	GA	gauge	PFL	pounds per lineal foot
AD	area drain	GALV	galvanized	PSF	pounds per square foot
BRG	bearing	GC	general contract (contractor)	PSI	pounds per square inch
BEL	below	GL	glass/glazing	PC	precast
BLDG	building	GLB	glass block	QT	quarry tile
BLK	block	GCMU	glazed concrete masonry unit	R	riser
BLKG	blocking	GR	grade	RA	return air
BD	board	GFCMU	ground face CMU	RAD	radius
BM	beam	GPDW	gypsum drywall	RD	roof drain
BOTT	bottom	HDW	hardware	RCP	reinforced concrete pipe
BRK	brick	HTG	heating	REF	reference (refer)
B/T	between	HVAC	heating ventilating air conditioning	RECEP	receptacle
BUR	built up roofing	HGT	height	RFL	reflect (ed)
BW	bottom of wall	HM	hollow metal	REFR	refrigerator
BYD	beyond	HORZ	horizontal	RFINF	reinforced
CPT	carpet	HB	hose bib	REQ	required
CI	cast iron	HR	hour	RESIL	resilient
CB	cement board	INCL	include	RH	right hand
CLG	ceiling	ID	inside diameter	RND	round
CTR	center	INSUL	insulation	RM	room
CT	ceramic tile	INT	interior	RL	rain leader
CIR	circle	JAN	janitor closet	RO	rough opening
CLR	clear (ance)	JT	joint	SACT	suspended acoustic ceiling tile
CLOS	closet	J	joist	SCHED	schedule
CO	clean out	KIT	kitchen	SFCMU	split face CMU
COL	column	LBL	label	SLNT	sealant
COMP	composition	LAM	laminate	SECT	section
CONC	concrete	LAV	lavatory	SHT	sheet
CMU	concrete masonry unit	LH	left hand	SIM	similar
CONST	construction	L	length	SC	solid core
CONT	continuous or continue	LT	light	S	south
CLL	contract limit line	LT WT	light weight	SPEC	specification
CJ	control joint	LF	linear foot	SQ	square
CG	corner guard	LL	live load	STD	standard
CORR	corridor	MH	manhole	STC	sound transmission class
CRS	course (s)	MFR	manufacturer	STL	steel
CF	cubic feet	MAS	masonry	STOR	storage
CY	cubic yard	MO	masonry opening	STRUCT	structure
DEPT	department	MTL	metal	SYM	symmetry (ical)
DTL	detail	MAX	maximum	SUSP	suspended
DIAM	diameter	MECH	mechanical	SYS	system
DIM	dimension	MED	medium	TEL	telephone
DISP	dispenser	MBR	member	TV	television
DIV	division	MATL	material	TEMP	tempered
DR	door	M	meter	TER	terrazzo
DBL	double	MM	millimeter	THK	thick
DH	double hung	MIN	minimum	THR	threshold
DN	down	MIR	mirror	T & G	tongue and groove
DS	downspout	MISC	miscellaneous	TC	top of curb
DWG	drawing	MOD	modular	TP	top of pavement
DF	drinking fountain	MTD	mounted	T	tread
EA	each	NAT	natural	TOW	top of wall
E	east	NRC	noise reduction coefficient	TYP	typical
EJ	expansion joint	NOM	nominal	UC	undercut
ELEC	electric (al)	N	north	UNF	unfurnished
EWC	electric water cooler	NIC	not in contract	UNO	unless noted otherwise
ELEV	elevation	NTS	not to scale	UR	urinal
EMER	emergency	No.	number	VB	vapor barrier
ENCL	enclosure	O/	over	VERT	vertical
EQUIP	equipment	OC	on center	VEST	vestibule
EST	estimate	OFF	office	VCT	vinyl composite tile
EXH	exhaust	OPNG	opening	VWC	vinyl wall covering
EXIST	existing	OPP	opposite	WH	wall hydrant
(E)	existing dimension	OWSJ	open web steel joist	WP	waterproofing
EXP	exposed	OPPH	opposite hand	WWF	welded wire fabric
EXT	exterior	OD	outside diameter	W	west
EIFS	exterior insulation finish system	OA	overall	WT	weight
FOC	face of concrete	OH	overhead	WIN	window
FOM	face of masonry	PT	pressure treated	W/	with
FOS	face of studs	PTD	painted	W/O	without
FF	finish floor			WD	wood
FIN	finish (ed)				

SYMBOLS

- NORTH ARROW
- 2 / AB — BUILDING ELEVATION
- 2 / A6 — BUILDING/ WALL SECTION
- AD / 9.4 — DETAIL: REFER ARCHITECTURAL DETAIL SHEET
- 1 / A7 — DETAIL: REFER DRAWING SHEET
- A — COLUMN GRID
- 1 — COLUMN GRID
- 4 A9 2 3 — INTERIOR ELEVATION
- A — WINDOW TYPE
- 102 — DOOR NUMBER
- ELEVATION DATUM
- A1 — PARTITION TYPE
- C — TOILET ACCESSORY
- CB 2 — CHALKBOARD/ TACKBOARD

MATERIALS

- EARTH/COMPACTED FILL
- POROUS FILL
- CONCRETE
- SAND/MORTAR/GROUT/PLASTER
- BRICK (COMMON OR FACE)
- CMU
- CUT STONE
- MARBLE
- STEEL
- ALUMINUM
- FINISH WOOD
- WOOD FRAMING
- WOOD BLOCKING
- PLYWOOD
- GLASS
- BATT INSULATION
- RIGID INSULATION
- ACOUSTIC TILE
- GYPSUM BOARD

VICINITY MAP

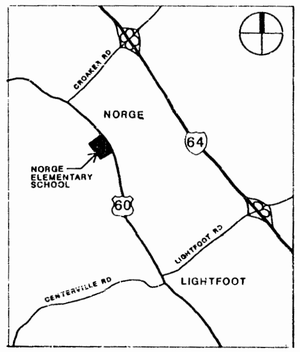

PROJECT DATA 1

BUILDING USE GROUP — E-EDUCATION

CONSTRUCTION TYPE (REF. SHEET A1)
1. ORIGINAL (1966) FACILITY (AREAS "B"&"C") — 2C
2. PREVIOUS ADDITION (1975) (AREA "A") — 5B
3. PROPOSED ADDITIONS (AREA "D"& ~~"E"~~) — 2C

FIRE SUPPRESSION: COMPLETE AUTOMATIC FIRE SUPPRESSION SPRINKLER SYSTEM (REF. PLUMB. DWGS.) IN ALL AREAS EXCEPT EXISTING

BUILDING AREA: AREA "A".

ORIGINAL (1966) FACILITY	~~(AND ALTS. 2&3)~~ ~~33,573~~	52,134 SQ. FT.
PREVIOUS ADDITION (1975) (AREA "A")		10,164 SQ. FT.
PROPOSED ADDITIONS (AREA "D" & ~~"E"~~ = OR 4)	~~30,000~~	24,975 SQ. FT.
TOTAL BUILDING AREA:	~~93,344~~	88,286 SQ. FT.

OCCUPANT LOAD (REF. SHT. A1)

BASE BID	1392
~~ALT. #1~~	~~132~~
~~ALT. #2~~	~~90~~
~~ALT. #3~~	~~0~~
~~ALT. #4~~	~~144~~
~~BASE BID + ALTS. #2,3,&4 (MAXIMUM OCCUPANCY)~~	~~1380~~
NON-SIMULTANEOUS USE (AB)	768

PARKING: 118 SPACES INCLUDING 5 HANDICAP SPACES

THIS PROJECT IS DESIGNED FOR COMPLIANCE WITH THE APPLICABLE PROVISIONS OF THE 1990 UNIFORM STATEWIDE BUILDING CODE (BOCA)

DRAWING INDEX

T-1 TITLE SHEET

CIVIL

C-1 LAYOUT PLAN
C-2 LAYOUT PLAN
C-3 DEMOLITION PLAN
C-4 GRADING & DRAINAGE PLAN
C-4A NOT ISSUED
C-5 UTILITY PLAN
C-6 UTILITY PLAN
C-7 EROSION CONTROL
C-8 DETAILS
C-9 NOTES & DETAILS
C-10 NOTES & DETAILS
C-11 DETAILS

LANDSCAPE

L-1 SITE PLAN - LANDSCAPE
L-2 PLANT SCHEDULE

ELECTRICAL

E-2 ELECTRICAL SITE PLAN

(23-2)(01-33) 1/16
SP 132-93
Norge Elementary School
Additions + renovations

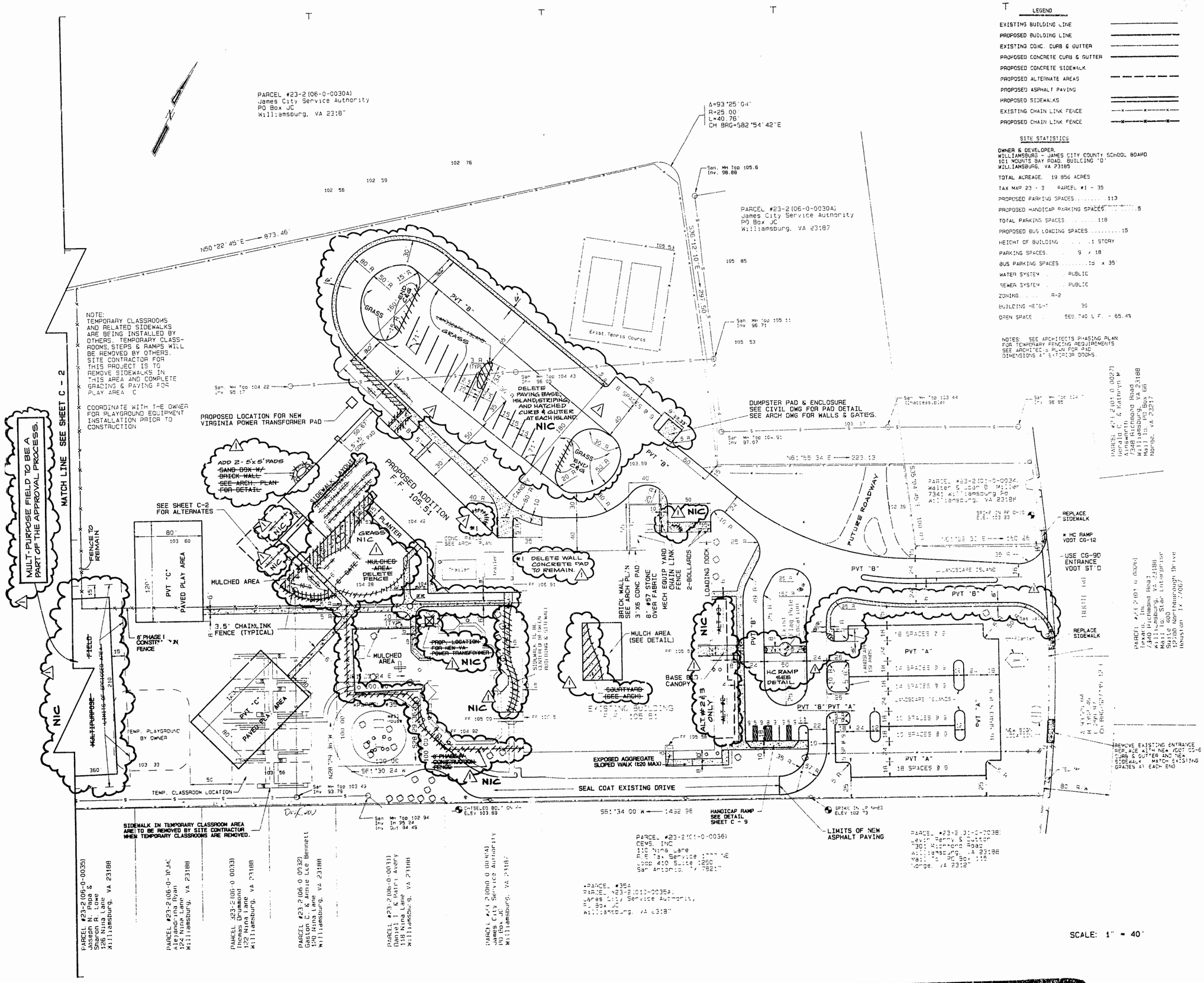

LEGEND

EXISTING BUILDING LINE	
PROPOSED BUILDING LINE	
EXISTING CONC. CURB & GUTTER	
PROPOSED CONCRETE CURB & GUTTER	
PROPOSED CONCRETE SIDEWALK	
PROPOSED ALTERNATE AREAS	
PROPOSED ASPHALT PAVING	
PROPOSED SIDEWALKS	
EXISTING CHAIN LINK FENCE	—x—x—x—
PROPOSED CHAIN LINK FENCE	—x—x—x—

SITE STATISTICS

OWNER & DEVELOPER,
WILLIAMSBURG - JAMES CITY COUNTY SCHOOL BOARD
101 MOUNTS BAY ROAD, BUILDING "D"
WILLIAMSBURG, VA 23185

TOTAL ACREAGE. 19.856 ACRES

TAX MAP 23 - 2 PARCEL #1 - 35

PROPOSED PARKING SPACES..... 113

PROPOSED HANDICAP PARKING SPACES..... 5

TOTAL PARKING SPACES..... 118

PROPOSED BUS LOADING SPACES..... 15

HEIGHT OF BUILDING ..... 1 STORY

PARKING SPACES. 9 x 18

BUS PARKING SPACES..... 15 x 35'

WATER SYSTEM ..... PUBLIC

SEWER SYSTEM ..... PUBLIC

ZONING..... R-2

BUILDING HEIGHT 30

OPEN SPACE ..... 560,740 S.F. - 65.4%

NOTES: SEE ARCHITECTS PHASING PLAN FOR TEMPORARY FENCING REQUIREMENTS
SEE ARCHITECTS PLAN FOR PAD DIMENSIONS AT EXTERIOR DOORS.

BOND COMFORT WESTMORELAND + HINER

207 West Broad Street
Richmond, Virginia 23220
804 7 8 8 - 4 7 7 4

ADDITIONS & ALTERATIONS TO

NORGE ELEMENTARY SCHOOL

WILLIAMSBURG-JAMES CITY COUNTY PUBLIC SCHOOLS

NORGE, VIRGINIA

STATE PROJECT #131-7C

©Bond Comfort Westmoreland + Hiner Architects, Inc.

PROJECT NUMBER: 9241

PROJECT MANAGER: COF

DRAWN BY: A B & A

ISSUE DATE: 12-17-93

REVISIONS: 3-7-94

△1 25 APRIL 1994

COMMONWEALTH OF VIRGINIA
A. B. SADLER, JR.
CERTIFICATE NO. 2934
REGISTERED PROFESSIONAL ENGINEER

SHEET TITLE: LAYOUT PLAN

SHEET NUMBER: C-1

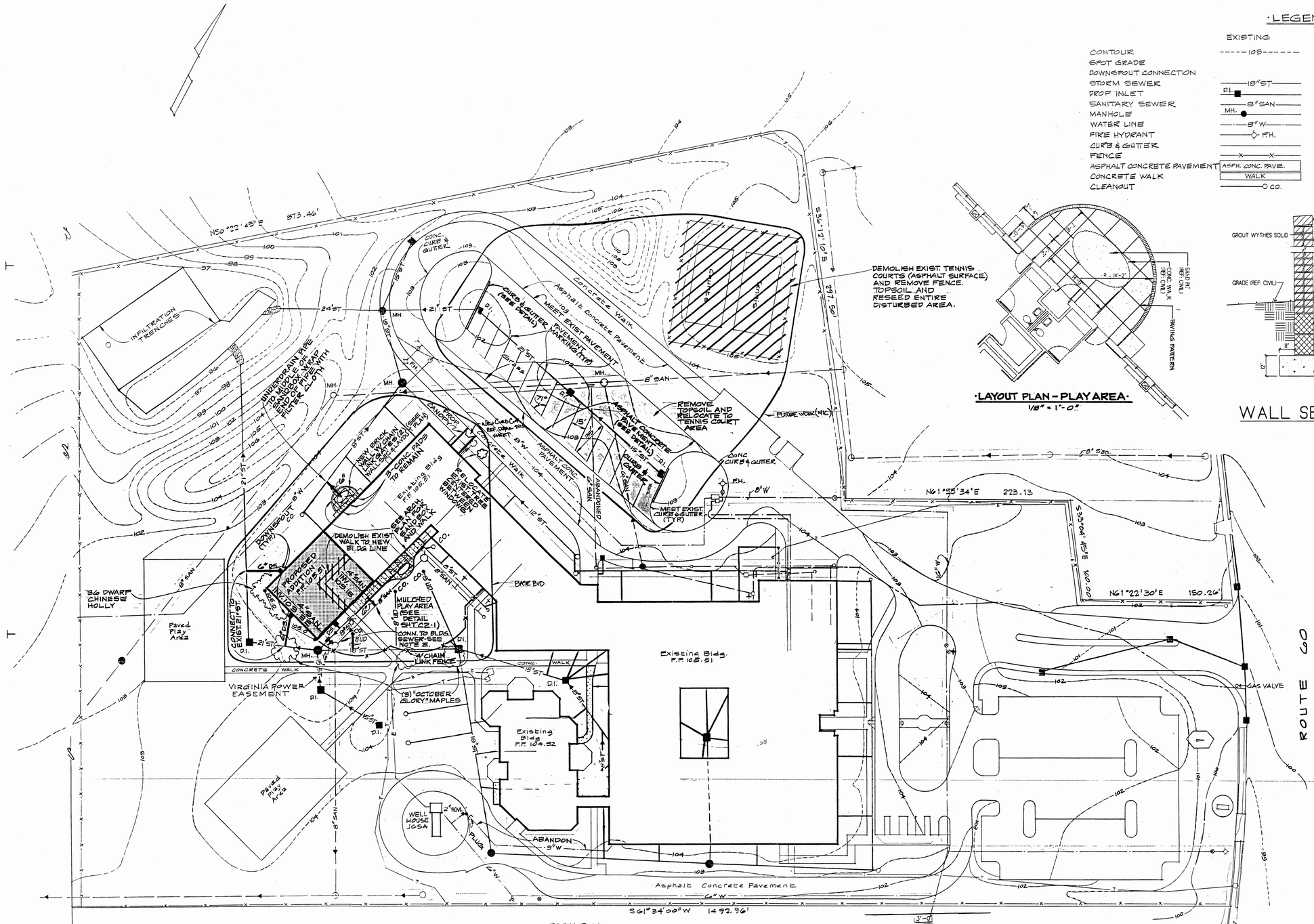

·LEGEND·

	EXISTING	PROPOSED
CONTOUR	103	
SPOT GRADE		105.33
DOWNSPOUT CONNECTION		
STORM SEWER	18"ST	
DROP INLET	D.I.	NEW D.I.
SANITARY SEWER	8"SAN	
MANHOLE	MH.	
WATER LINE	8"W	
FIRE HYDRANT	F.H.	
CURB & GUTTER		
FENCE	X X	X X
ASPHALT CONCRETE PAVEMENT	ASPH. CONC. PAVE.	
CONCRETE WALK	WALK	
CLEANOUT	CO.	CO.

·LAYOUT PLAN - PLAY AREA·
1/8" = 1'-0"

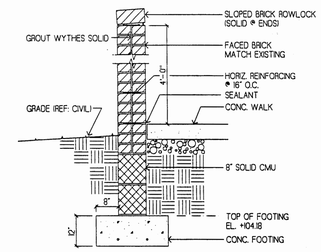

WALL SECTION
3/4" = 1'-0"

NOTES:

1. ~~CONTRACTOR TO PLUG AND ABANDON 3" WATER LINE FROM WATER METER TO SCHOOL. JAMES CITY SERVICE AUTHORITY WILL REMOVE 2" WATER METER. CONTRACTOR TO REMOVE METER BOX. COORDINATE WORK WITH J.C.S.A.~~ NOT USED
2. SEWER LATERAL TO BLDG. SHALL BE PVC PIPE ASTM D3034, SDR-35 OR SCHEDULE 80 PLASTIC PIPE ASTM 1785.
3. ~~REGRADE EARTH AREAS ON BOTH SIDES OF WALK TO ASSURE POSITIVE DRAINAGE TO EXISTING AND NEW (B-16) DRAINAGE INLETS.~~ NOT USED
4. REFERENCE MECHANICAL DWGS. FOR LOCATIONS OF DRY WELLS FOR CONDENSATE DRAINS.

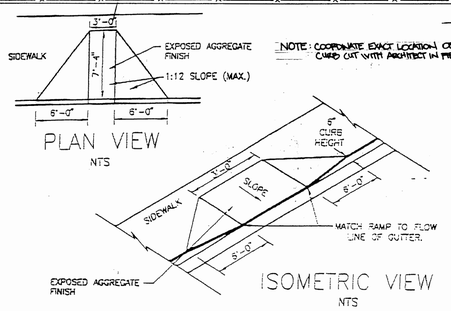

NOTE: COORDINATE EXACT LOCATION OF CURB CUT WITH ARCHITECT IN FIELD

DETAIL - CURB RAMP
(VDOT STD. CG-12)

SCALE: 1" = 40'

2/13

ARCHITECTS

BOND COMET WESTMORELAND + HINER

207 West Broad Street
Richmond, Virginia 23220
804 788-4774

ADDITION TO

NORGE ELEMENTARY SCHOOL
PHASE I & III

WILLIAMSBURG-JAMES CITY COUNTY PUBLIC SCHOOLS

NORGE, VIRGINIA

STATE PROJECT #131-7D

© Bond Comet Westmoreland + Hiner Architects, Inc.
Material included herein is covered by copyright. Use of this work is prohibited without the express written consent of Bond Comet Westmoreland + Hiner Architects, Inc.

PROJECT NUMBER
9540

PROJECT MANAGER
DDW

DRAWN BY:
AB&A

ISSUE DATE
17 JUNE 1996

REVISIONS

COMMONWEALTH OF VIRGINIA
A. B. SADLER, JR.
CERTIFICATE No. 2934
CERTIFIED PROFESSIONAL ENGINEER

SHEET TITLE
LAYOUT, GRADING, AND DRAINAGE PLAN

SHEET NUMBER
C1

L & D 229

STORM SEWER DESIGN COMPUTATIONS

ROUTE 60 PROJ. NORGE ELEM. (Rear)
COUNTY _____ DISTRICT _____
DESCRIPTION _____

SHEET ____ OF ____

FROM POINT	TO POINT	AREA DRAIN. "A" ACRES	RUN-OFF COEF. C	CA INCRE-MENT	CA ACCUM-ULATED	INLET TIME MIN-UTES	RAIN FALL IN./HR.	RUNOFF Q C.F.S.	INVERT ELEVATIONS UPPER END	INVERT ELEVATIONS LOWER END	LENGTH FT.	SLOPE FT./FT.	DIA. IN.	CAPA-CITY C.F.S.	VEL. F.P.S.	FLOW TIME SEC.	REMARKS
(1)	(2)	(3)	(4)	(5)	(6)	(7)	(8)	(9)	(10)	(11)	(12)	(13)	(14)	(15)	(16)	(17)	(18)
R.D.	B-8	0.23	0.90	0.21		15	5.2	1.09		101.10	-	0.85	8"	1.10	3.2		
B-8	B-9	0.17	0.75	0.13	0.24	15	5.2	1.25	101.00	100.78	110	0.20	15"	2.85	2.3		
B-9	MH#3	0.29	0.75	0.22	0.46	15	5.2	2.39	100.68	100.29	140	0.20	15"	3.40	2.8		Lay @ 0.28%
C.O#3	C.O.#4	0.14	0.90	0.13		15	5.2	0.68	102.27	101.94	105	0.33	8"	0.70	2.0		
C.O#4	MH.#3	0.12	0.90	0.11	0.24	15	5.2	1.25	101.94	100.29	150	1.10	8"	1.25	3.5		
B-10	B-11	0.24	0.40	0.10		15	5.2	0.52	100.60	100.47	65	0.20	15"	2.85	2.3		
B-11	MH#3	0.22	0.40	0.09	0.19	15	5.2	0.99	100.37	100.29	40	0.20	15"	2.85	2.3		
MH#3	B-12	-	-		0.89	15	5.2	4.63	100.19	99.83	68	0.53	15"	4.70	3.7	~~21"~~	~~8.45~~
																21"	8.9 .3
B-12	OUTFALL	0.12	0.40	0.05	1.04	15	5.2	5.41	99.73	97.77	200	0.71	15"	5.41	4.3	21"	8.95 .32
C.O#5	C.O#6	0.14	0.90	0.13		15	5.2	0.68	102.01	101.28	215	0.34	8"	0.70	2.0		
C.O#6	C.O.#6A	-	-	0.13		15	5.2	0.68	101.28	101.23	15'	0.34	8"	0.70	2.0		
C.O#6A	MH#4	0.20	0.90	0.18	0.31	15	5.2	1.61	101.23	100.75	218	0.22	12"	1.65	2.1		
C.O#7	MH#4	0.17	0.90	0.15		15	5.2	0.78	101.43	101.75	158	0.43	8"	0.78	2.3		
MH#4	OUTFALL				0.46	15	5.2	2.39	101.65	98.00	100	0.47	12"	4.5	5.6		Lay @ 1.61%

STORM SEWER DESIGN COMPUTATIONS

L & D 229

ROUTE 60 PROJ. Norge Elem. (FRONT)
COUNTY _____ DISTRICT _____
DESCRIPTION _____

SHEET ____ OF ____

FROM POINT	TO POINT	AREA DRAIN. "A" ACRES	RUN-OFF COEF. C	CA INCRE-MENT	CA ACCUM-ULATED	INLET TIME MIN-UTES	RAIN FALL IN./HR.	RUNOFF Q C.F.S.	INVERT ELEVATIONS UPPER END	INVERT ELEVATIONS LOWER END	LENGTH FT.	SLOPE FT./FT.	DIA. IN.	CAPA-CITY C.F.S.	VEL. F.P.S.	FLOW TIME SEC.	REMARKS
(1)	(2)	(3)	(4)	(5)	(6)	(7)	(8)	(9)	(10)	(11)	(12)	(13)	(14)	(15)	(16)	(17)	(18)
B-7	MH#1	0.59	0.90	0.53		15	5.2	2.76	99.27	98.99	138'	0.20	15"	2.85	2.3		
Co #2	MH#1	0.09	0.90	0.08		15	5.2	0.42	99.50	98.99	100'	0.57	8"	0.90	2.5		
MH#1	MH#2	0.09	0.90	0.08	0.69	15	5.2	3.59	98.89	98.30	185'	0.32	15"	3.60	2.8		
Co #1	MH#2	0.26	0.90	0.23		15	5.2	1.20	101.13	98.30	283'	1.00	8"	1.20	3.4		
MH#2	B-6	-	-	-	0.92	15	5.2	4.78	98.20	98.00	94'	0.21	18"	4.80	2.7		
B-6	B-5	0.97	0.75	0.72	1.64	15	5.2	8.53	97.90	97.33	197'	0.29	21"	8.55	3.50		
B-5	B-4	0.60	0.90	0.54	2.18	15	5.2	11.33	97.23	96.79	175	0.25	24"	11.35	3.6		
B-4	EXIST DI	0.45	0.90	0.41	2.59	15	5.2	13.47	96.69	96.50	55	0.35	24"	13.50	4.2		
B-2A	B-2	0.86	0.90	0.77		15	5.2	4.00	97.42	97.24	123	0.15	18"	5.80	3.3		Large 0.32%
B-1	B-2	0.43	0.90	0.39		15	5.2	2.03	97.14	97.03	53	0.20	15"	2.85	2.3		
B-2	EXIST DI	0.30	0.90	0.27	1.43	15	5.2	7.44	96.93	96.50	87	0.50	18"	7.50	4.0		
B-3	EXIST DI	1.11	0.90	1.00		15	5.2	5.20	96.70	96.50	80'	0.25	18"	5.20	2.8		
EXIST DI	EXIST Basin	-	-	-	5.02	15	5.2	26.10	96.50	96.04	70'	0.72	27"	26.10	6.5		

(BUS LOOP) - (3)

L & D 229

STORM SEWER DESIGN COMPUTATIONS

ROUTE _____ PROJ. NORGE ELEMENTARY
COUNTY _____ DISTRICT _____
DESCRIPTION _____

SHEET ____ OF ____

FROM POINT	TO POINT	AREA DRAIN. "A" ACRES	RUN-OFF COEF. C	CA INCRE-MENT	CA ACCUM-ULATED	INLET TIME MIN-UTES	RAIN FALL IN./HR.	RUNOFF Q C.F.S.	INVERT ELEVATIONS UPPER END	INVERT ELEVATIONS LOWER END	LENGTH FT.	SLOPE FT./FT.	DIA. IN.	CAPA-CITY C.F.S.	VEL. F.P.S.	FLOW TIME SEC.	REMARKS
(1)	(2)	(3)	(4)	(5)	(6)	(7)	(8)	(9)	(10)	(11)	(12)	(13)	(14)	(15)	(16)	(17)	(18)
B-15	B-14	0.41	0.90	0.37													
		0.28	0.40	0.11	0.48	15	5.2	2.50	99.41	98.98	120	0.20	15"	3.80	3.1		Laye 0.36%
B-14	B-13	0.95	0.90	0.86													
		0.30	0.40	0.12	1.46	15	5.2	7.59	98.88	98.26	120	0.52	18"	7.60	4.2		Laye 0.52%
B-13	outfall	0.95	0.90	0.86													
		0.51	0.40	0.20	2.52	15	5.2	13.10	98.16	97.50	200	0.33	24"	13.10	4.2		Laye 0.33%

NORGE ELEM

STORM WATER INLET COMPUTATIONS RTE PROJ DIST

INLET NO	INLET TYPE	INLET LENGTH FT	STATION	LENGTH PROJECTED DRAINED FT	DRAINAGE AREA ACRES	C	CA	Σ CA	I IN/HR	RUNOFF Q CFS	CARRY OVER Q_a CFS	GUTTER FLOW Q_b CFS	NG TER SLOPE FT/FT	SPREAD FT	DEPTH AT CURB FT	Q_a/L_a CFS/FT	LA FT	L/L_a R	Q/Q_a E	Q/Q_a R	CFS INTERCEPTED N	CF CA OVL SPREAD AT SAG	SHEET ___ REMARK
B-15							.48		5.2	2.50							6	0.46	0.42	0.63	0.30	8'	
B-14							0.98		5.2	5.10							10'	0.46	0.51	0.74	0.34	10'	
B-13							1.06		5.2	5.51							10'	0.46	0.55	0.77	0.35	11'	
B-7	DI-1						0.53		5.2	2.76							P=9.25				d=	0.22'	
B-6							0.72		5.2	3.74							8'	0.46	0.46	0.70	0.32	9'	
B-5							0.54		5.2	2.81							6'	0.46	0.47	0.70	0.32	9'	
B-4							0.41		5.2	2.13							6'	0.46	0.36	0.60	0.28	8'	
B-2							0.27		5.2	1.40							4	0.46	0.35	0.58	0.27	7'	
B-2A							0.77		5.2	4.00							10	0.46	0.40	0.63	0.29	8'	
B-1							0.39		5.2	2.03							6	0.46	0.34	0.58	0.27	7'	
B-3							1.00		5.2	5.20							14	0.46	0.37	0.60	0.28	8'	
B-8	DI-1						0.13		5.2	0.68							P=9.25			d=	0.10'		
B-9	DI-1						0.22		5.2	1.14							P=9.25			d=	0.13'		
B-10	DI-1						0.10		5.2	0.52							P=9.25			d=	0.10'		
B-11	DI-1						0.09		5.2	0.47							P=9.25			d=	0.10'		
B-12	DI-1						0.05		5.2	0.26							P=9.25			d=	0.10'		

FILE COPY

MEMORANDUM

Date: August 22, 1995

To: Joe Grebb, WJCC Building Services

From: Darryl E. Cook, Development Engineer DEC

Subject: Norge School Drainage Modifications

As we discussed yesterday, Mr. Daniel Avery, a property owner adjacent to the Norge Elementary School is experiencing a drainage problem related to drainage from the school. He is located adjacent to the pavement loop that encircles the well house at the left rear of the school. Water drains from this area onto his property and stands in his yard. He also claims that drainage from the existing curb & gutter leading from the loop area is not contained within the curb and drains to his lot.

In evaluating the problem with Mr. Avery, it appears that an extension of the curb at the loop and a modification to a drainage structure will solve his problem. As shown on the attached sketch, the curb should be extended 40 feet along the edge of the existing paving to intercept the flow. Then, manhole (MH) #5 should be changed to a drainage inlet (DI-7, with type III grate) and depressed as necessary to capture the additional flow in conjunction with changing 20 feet of existing curb and gutter to have a reverse gutter pan (called dry curb and gutter on the sheet C-8 detail) to direct water to the new inlet. Finally, the paving in this area would also need to be modified to direct flow from the reverse curb and gutter section.

This modification should cut off drainage from the school site to his property and also reduce flow to the existing curb and gutter that currently overflows onto his property. The timing is good to accomplish this work as there is still concrete work to do behind the school and the existing paving surface has not yet been patched and overlaid where it was cut to install MH #5 and associated piping.

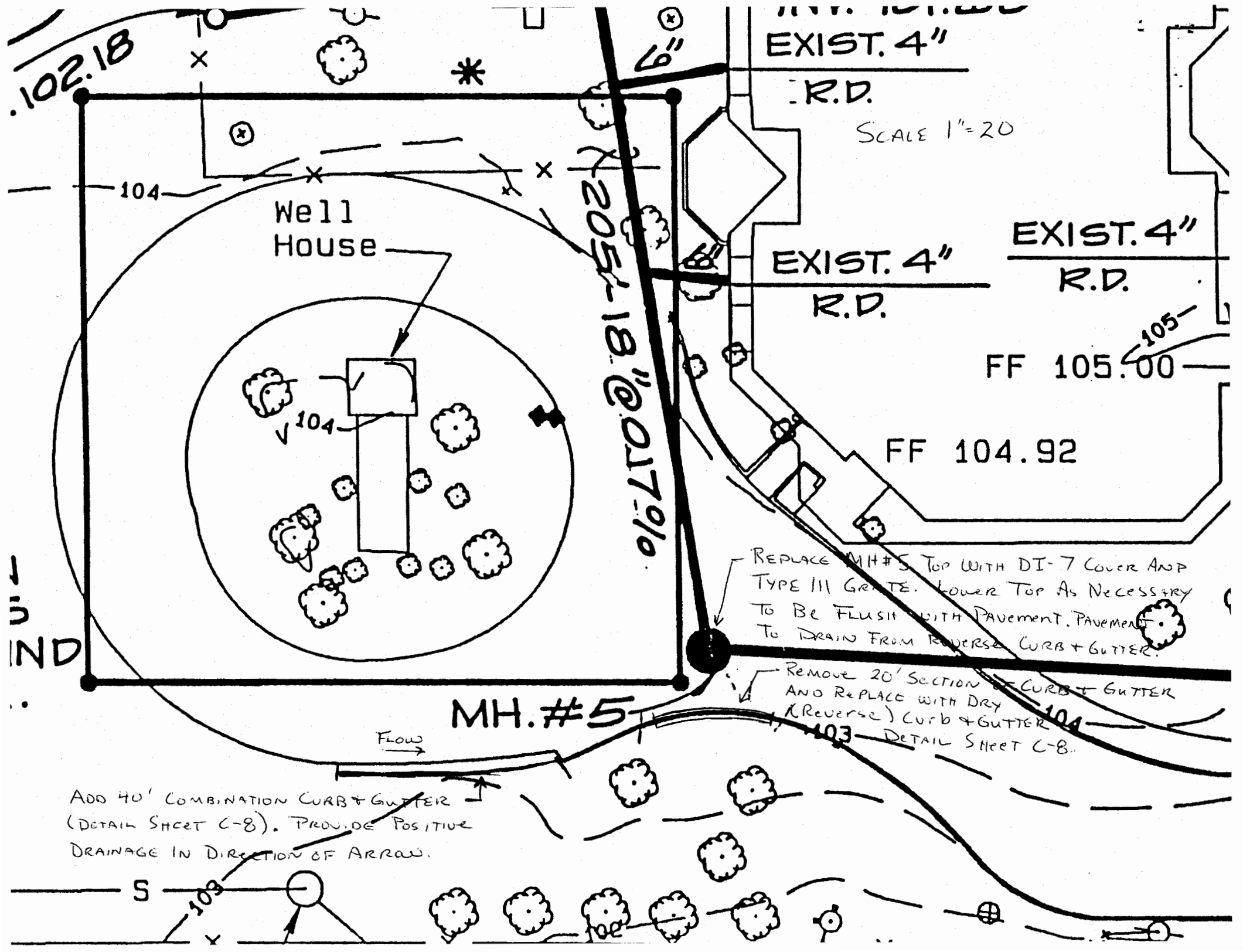
102.18
EXIST. 4"
R.D.
SCALE 1"=20
104
Well
House
104
205'-18"@017%
EXIST. 4"
R.D.
EXIST. 4"
R.D.
105
FF 105.00
FF 104.92
REPLACE MH#5 TOP WITH DI-7 COVER AND TYPE III GRATE. LOWER TOP AS NECESSARY TO BE FLUSH WITH PAVEMENT. PAVEMENT TO DRAIN FROM REVERSE CURB + GUTTER.
REMOVE 20' SECTION OF CURB + GUTTER AND REPLACE WITH DRY (REVERSE) CURB + GUTTER DETAIL SHEET C-8.
MH.#5
FLOW
104
103
ADD 40' COMBINATION CURB + GUTTER (DETAIL SHEET C-8). PROVIDE POSITIVE DRAINAGE IN DIRECTION OF ARROW.
S
103

FROM SHEET C-8

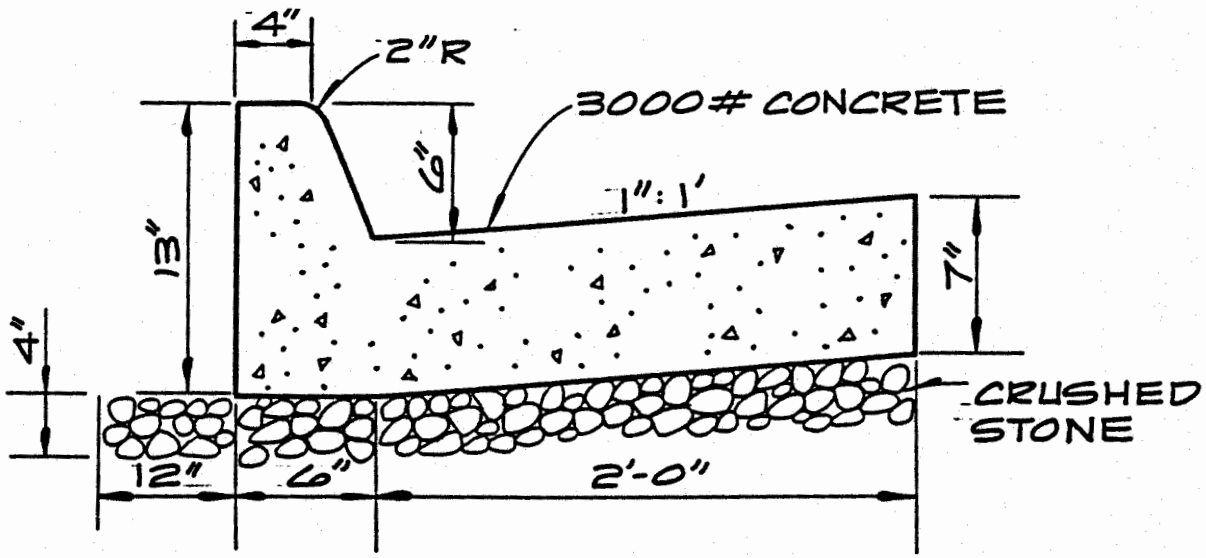

NOTE:

WHERE DRY CURB & GUTTER IS TO BE INSTALLED, SLOPE GUTTER AWAY FROM CURB TO MATCH PAVING SLOPE. CONTRACTOR TO CONTACT ARCHITECT PRIOR TO POURING CURB & GUTTER TO VERIFY LOCATION OF DRY GUTTER.

· COMBINATION CURB AND GUTTER ·

NO SCALE

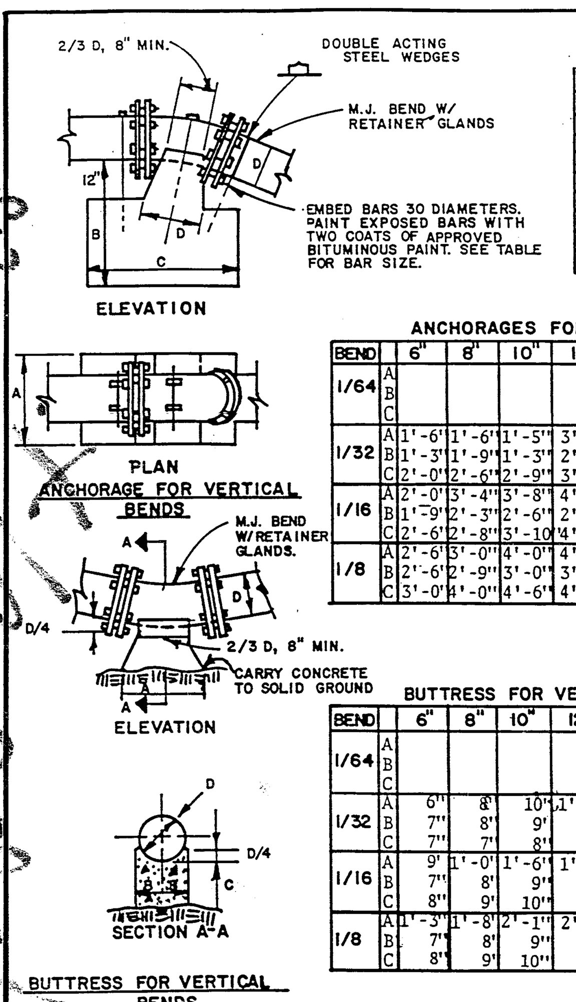

REINFORCING BARS

SIZE	1/64	1/32	1/16	1/8
6"		3-#6	3-#6	3-#6
8"		3-#6	3-#6	3-#6
10"		3-#6	3-#6	3-#6
12"		3-#6	3-#6	3-#6
16"		3-#6	3-#6	3-#6
20"	3-#6	3-#6	3-#6	4-#6
24"	3-#6	3-#6	3-#6	5-#6
30"	3-#6	3-#6	5-#6	5-#7
36"	3-#6	4-#6	5-#7	6-#7

ANCHORAGES FOR VERTICAL BENDS

BEND		6"	8"	10"	12"	16"	20"	24"	30"	36"
1/64	A						2'-2"	2'-6"	3'-6"	3'-6"
	B						2'-0"	2'-6"	2'-6"	3'-0"
	C						4'-6"	4'-6"	5'-0"	5'-0"
1/32	A	1'-6"	1'-6"	1'-5"	3'-0"	3'-6"	4'-0"	4'-3"	4'-6"	5'-0"
	B	1'-3"	1'-9"	1'-3"	2'-0"	2'-0"	2'-6"	2'-6"	2'-8"	4'-0"
	C	2'-0"	2'-6"	2'-9"	3'-0"	4'-0"	5'-0"	5'-9"	6'-6"	7'-0"
1/16	A	2'-0"	3'-4"	3'-8"	4'-0"	4'-4"	4'-8"	5'-0"	5'-4"	6'-0"
	B	1'-9"	2'-3"	2'-6"	2'-6"	2'-6"	2'-8"	3'-8"	4'-6"	5'-6"
	C	2'-6"	2'-8"	3'-10	4'-0"	5'-6"	7'-6"	8'-6"	8'-6"	10-1"
1/8	A	2'-6"	3'-0"	4'-0"	4'-6"	5'-2"	5'-6"	6'-0"	6'-6"	7'-6"
	B	2'-6"	2'-9"	3'-0"	3'-6"	4'-0"	4'-6"	5'-6"	6'-0"	6'-6"
	C	3'-0"	4'-0"	4'-6"	4'-9"	6'-6"	8'-6"	9'-6"	11'-0"	11'-6"

BUTTRESS FOR VERTICAL BENDS

BEND		6"	8"	10"	12"	16"	20"	24"	30"	36"
1/64	A						1'-8"	2'-0"	2'-6"	3'-0"
	B						10"	1'-0"	1'-3"	1'-6"
	C						10"	1'-0"	1'-1"	1'-2"
1/32	A	6"	8"	10"	1'-0"	1'-4"	1'-8"	2'-0"	2'-6"	3'-0"
	B	7"	8"	9"	10"	1'-0"	1'-2"	1'-4"	1'-7"	1'-11"
	C	7"	7"	8"	8"	9"	10"	1'-0"	1'-1"	1'-2"
1/16	A	9"	1'-0"	1'-6"	1'-9"	2'-3"	3'-0"	3'-6"	4'-2"	5'-4"
	B	7"	8"	9"	10"	1'-0"	1'-2"	1'-4"	1'-7"	2'-0"
	C	8"	9"	10"	11"	1'-2"	1'-4"	1'-4"	1'-9"	2'-0"
1/8	A	1'-3"	1'-8"	2'-1"	2'-6"	3'-4"	4'-2"	5'-0"	6'-3"	7'-0"
	B	7"	8"	9"	11"	1'-3"	1'-6"	1'-8"	2'-0"	2'-6"
	C	8"	9"	10"	11"	1'-2"	1'-4"	1'-9"	2'-3"	2'-8"

NOTES:

1. ALL CONCRETE TO BE 3000 PSI.
2. BUTTRESS DIMENSIONS SHOWN ARE MINIMUM. DIMENSIONS ARE BASED ON SOIL BEARING PRESSURE OF 3000 PSI AND STATIC WATER PRESSURE IS LESS THAN 3000 PSF SPECIAL BUTTRESS DESIGN IS REQUIRED.

JAMES CITY SERVICE AUTHORITY
BUTTRESSES & ANCHORAGES FOR VERTICAL BENDS
DWG NO W 4.0 | SCALE : NONE
DWN BY : EMG | DATE : 7-1-89

BEND		6"	8"	10"	12"	18"	20"	24"	30"	36"
1/64	A						1'-8"	2'-0"	2'-6"	3'-0"
	B						10"	1'-0"	1'-3"	1'-6"
	C						10"	1'-0"	1'-1"	1'-2"
1/32	A	6"	8"	10"	1'-0"	1'-4"	1'-8"	2'-0"	2'-6"	3'-0"
	B	7"	8"	9"	10"	1'-0"	1'-2"	1'-4"	1'-7"	1'-11"
	C	7"	7"	8"	8"	9"	10"	1'-0"	1'-1"	1'-2"
1/16	A	9"	1'-0"	1'-6"	1'-9"	2'-3"	3'-0"	3'-6"	4'-2"	5'-4"
	B	7"	8"	9"	10"	1'-0"	1'-2"	1'-4"	1'-7"	2'-0"
	C	8"	9"	10"	11"	1'-2"	1'-4"	1'-4"	1'-9"	2'-0"
1/8	A	1'-3"	1'-8"	2'-1"	2'-6"	3'-4"	4'-2"	5'-0"	6'-3"	7'-0"
	B	7"	8"	9"	11"	1'-3"	1'-6"	1'-8"	2'-0"	2'-6"
	C	8"	9"	10"	11"	1'-2"	1'-4"	1'-9"	2'-3"	2'-8"
1/4	A		2'-3"		3'-6"					
	B		9"		12"					
	C		9"		12"					

NOTES:

1. ALL CONCRETE TO BE 3000 PSI.
2. BUTTRESS DIMENSIONS SHOWN ARE MINIMUM. DIMENSIONS ARE BASED UPON SOIL BEARING PRESSURE OF 3000 PSF AND STATIC WATER PRESSURE OF 150 PSI.

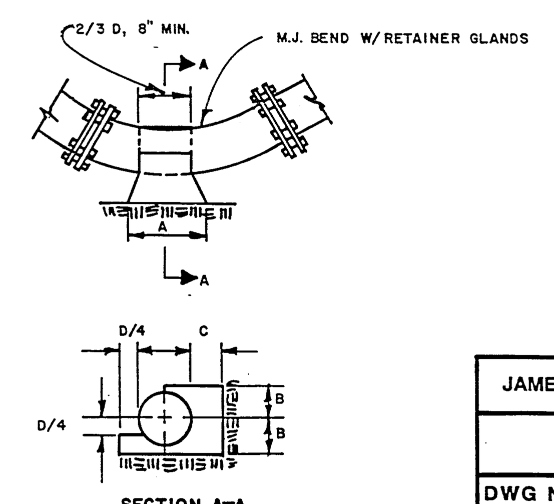

JAMES CITY SERVICE AUTHORITY
BUTTRESS FOR HORIZONTAL BENDS
DWG NO W-4.2 | SCALE : NONE
DWN BY : EMG | DATE : 7-1-89

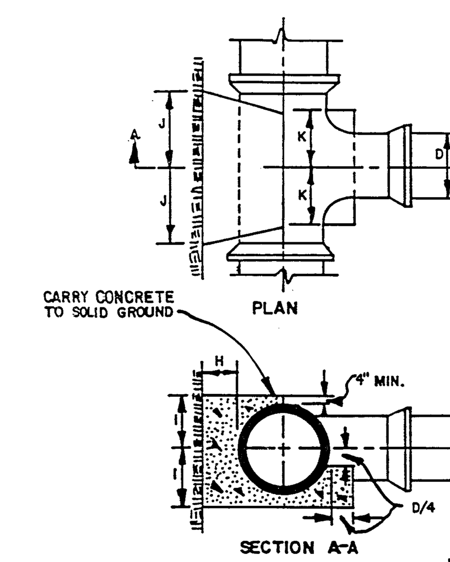

REFER TO JCSA SPECIFICATIONS SECTION 1.41 FOR RETAINER GLAND REQUIREMENTS.

SIZE OF BRANCH

D	6"	8"	10"	12"	18"	20"	24"	30"	36"
H	8"	9"	10"	1'-0"	1'-2"	1'-4"	1'-6"	1'-9"	2'-0"
I	8"	10"	1'-0"	1'-3"	1'-8"	2'-1"	2'-6"	3'-1"	3'-9"
J	6"	8"	1'-0"	1'-0"	1'-4"	1'-8"	2'-0"	2'-6"	3'-0"
K	6"	8"	8"	8"	10"	1'-2"	1'-4"	1'-6"	1'-10"

1. ALL CONCRETE TO BE 3000 P.S.I.
2. BUTTRESS DIMENSIOIS SHOWN ARE MINIMUM. DIMENSIONS ARE BASED UPON SOIL BEARING PRESSURE OF 3000 P.S.F. AND STATIC WATER PRESSURE OF 150 P.S.I. WHEN PRESSURE EXCEEDS 150 P.S.I. OR WHERE SOIL BEARING PRESSURE IS LESS THAN 3000 P.S.F. SPECIAL BUTTRESS DESIGN IS REQUIRED.

JAMES CITY SERVICE AUTHORITY
BUTTRESS FOR TEES
DWG. NO. 4.1 | SCALE : NONE
DWN. BY : EMG | DATE : 7-1-89

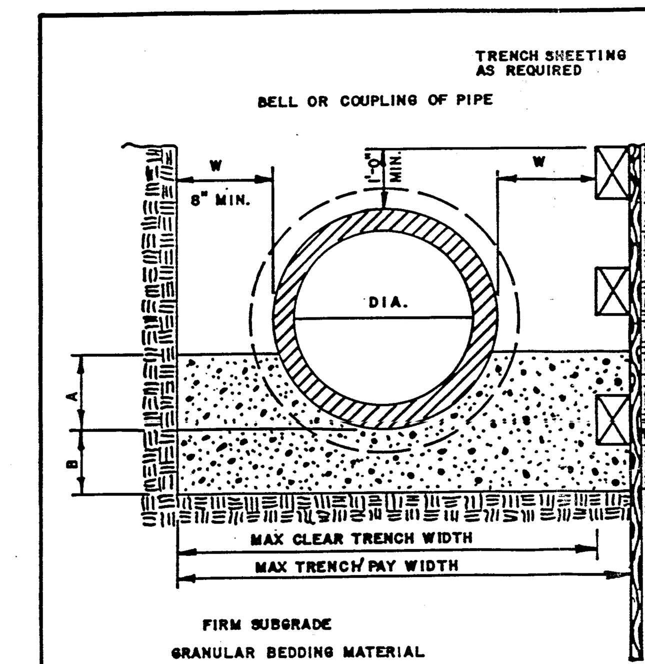

D	A	W	B
3"&4"	3"	12"	6"
6"	4"	11"	6"
8"	5"	10"	6"
10"	5"	9"	6"
12"	5"	8"	6"
15"	5"	8"	6"
16"&18"	6"	8"	6"
20"&21"	7"	8"	6"
24"	8"	12"	6"
27"	8"	12"	6"
30"	9"	12"	6"
33"	10"	15"	6"
38"	10"	15"	6"
42"	13"	15"	6"
48"	15"	18"	6"
54"	16"	18"	6"
60"	18"	18"	6"
68"	21"	18"	6"
72"	21"	18"	6"
78"	23"	18"	6"
84"	25"	18"	6"
90"	25"	18"	6"
96"	25"	18"	12"
102"	30"	18"	12"
108"	32"	18"	12"
114"	34"	24"	12"
120"	36"	24"	12"

WHERE SPECIFICALLY REQUIRED, f'c=2000 PSI @ 28 DAYS CONCRETE AND SADDLE BLOCKS SHALL BE USED IN LIEU OF THE GRAVEL CRADLE.

THE GRANULAR MATERIALS FOR BEDDING SHALL BE (ASTM C33 67) WASHED GRAVEL OR CRUSHED STONE FOR 90" AND SMALLER.

MAXIMUM CLEAR TRENCH WIDTH SHALL BE 2W PLUS THE OUTSIDE DIAMETER OF THE PIPE.

ELLIPTICAL PIPE SHALL BE BEDDED IN SAND. SEE CONTRACT DRAWINGS FOR AMOUNT OF BEDDING REQUIRED.

JAMES CITY SERVICE AUTHORITY
BEDDING AND TRENCH WIDTHS
DWG. NO.W10.0 | SCALE : NONE
DWN. BY : EMG | DATE 7-1-89

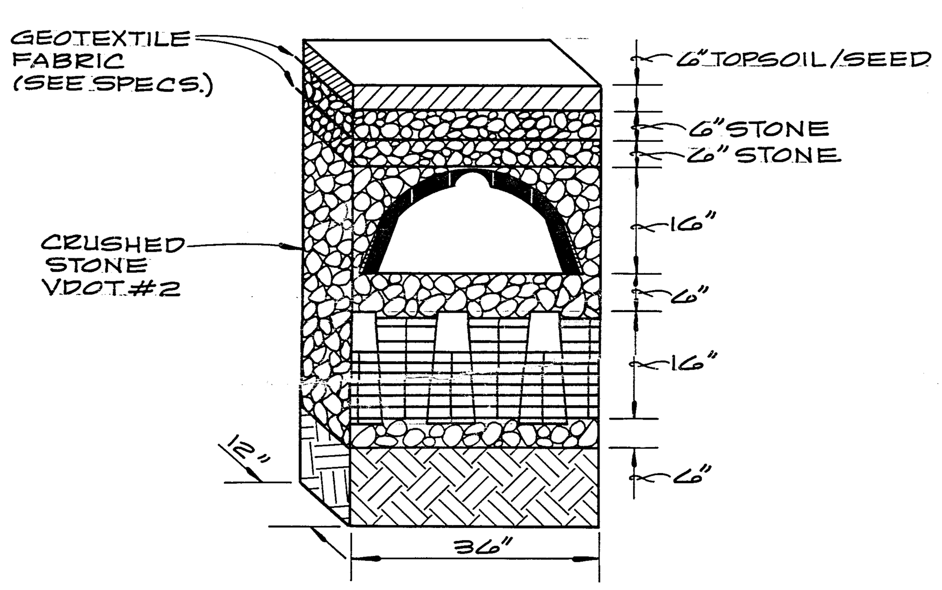

·ELEVATION·

·№ 1·

·INFILTRATOR CHAMBERS IN TWO LAYERS·

NO SCALE

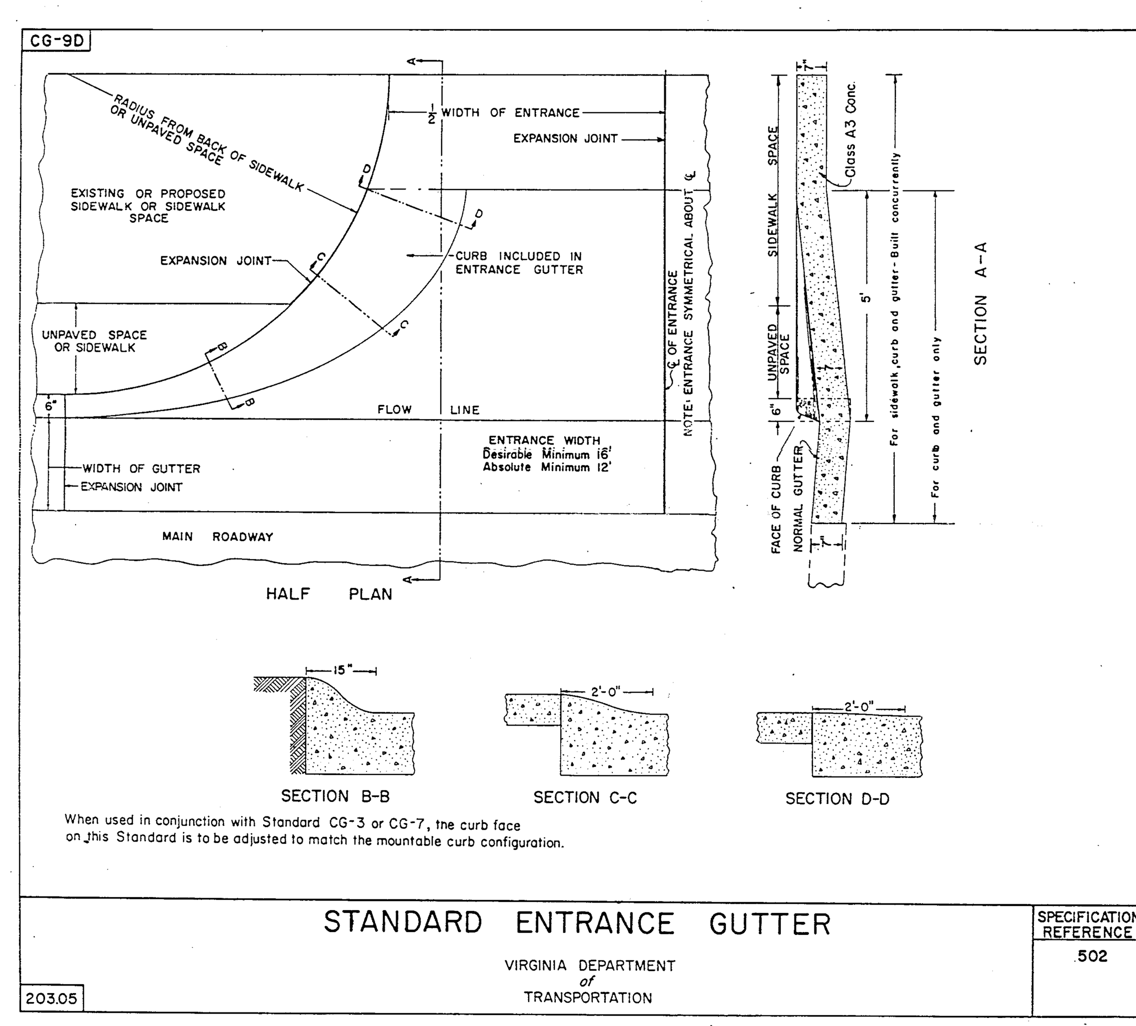

STANDARD ENTRANCE GUTTER

VIRGINIA DEPARTMENT OF TRANSPORTATION

SPECIFICATION REFERENCE 502

20305

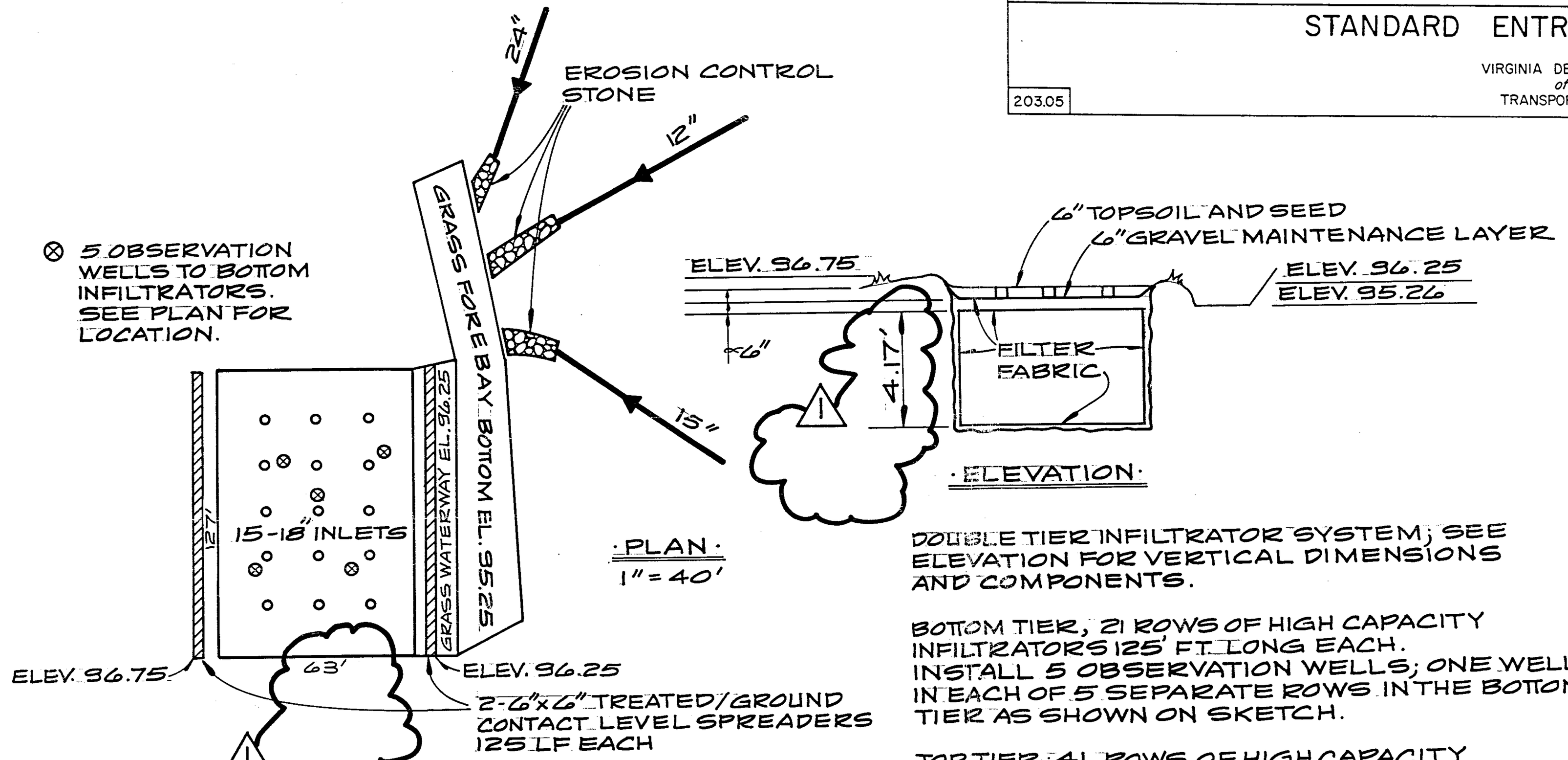

DOUBLE TIER INFILTRATOR SYSTEM; SEE ELEVATION FOR VERTICAL DIMENSIONS AND COMPONENTS.

BOTTOM TIER; 21 ROWS OF HIGH CAPACITY INFILTRATORS 125' FT. LONG EACH. INSTALL 5 OBSERVATION WELLS; ONE WELL IN EACH OF 5 SEPARATE ROWS IN THE BOTTOM TIER AS SHOWN ON SKETCH.

TOP TIER; 41 ROWS OF HIGH CAPACITY INFILTRATORS 62.5 FT. LONG EACH.

·№ 1·

·PLAN AND SECTION·

DOUBLE TIER INFILTRATOR SYSTEM

SCALE: HORIZONTAL 1" = 40'

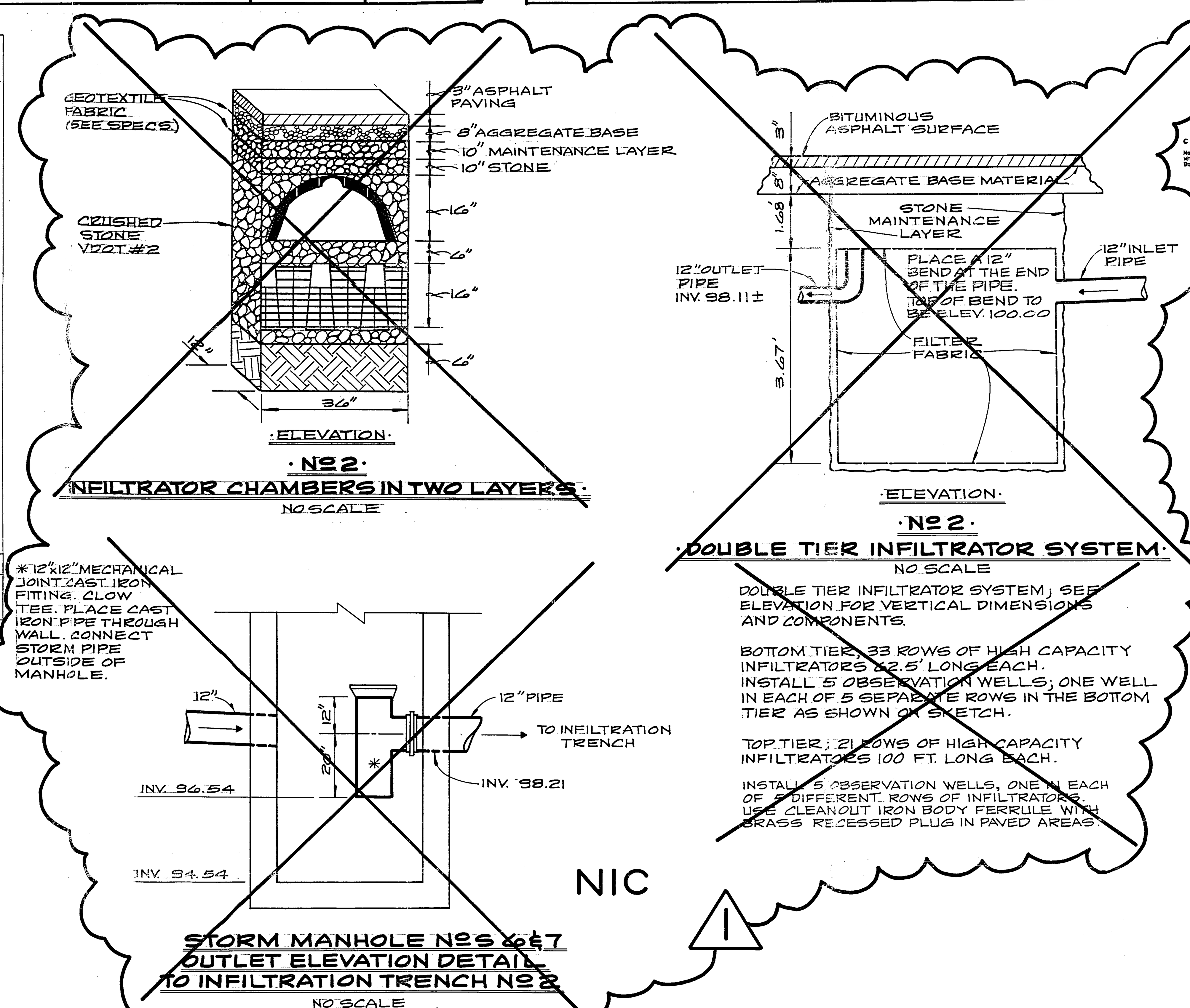

ARCHITECTS

BOND
COMET
WESTMORELAND
+HINER

207 West Broad Street
Richmond, Virginia 23220
804 788-4774

ADDITIONS & ALTERATIONS TO

NORGE ELEMENTARY SCHOOL

WILLIAMSBURG-JAMES CITY COUNTY PUBLIC SCHOOLS

NORGE, VIRGINIA

STATE PROJECT #131-7C

© Bond Comet Westmoreland + Hiner Architects, Inc. Material included herein is covered by copyright. Use or reproduction in whole or in part is forbidden without the expressed written consent of Bond Comet Westmoreland + Hiner Architects.

PROJECT NUMBER: 9241

PROJECT MANAGER: CDF

DRAWN BY: AB&A

ISSUE DATE: 12.17.93

REVISIONS: 3.7.94

⚠1 25 APRIL 1994

SHEET TITLE: DETAILS

SHEET NUMBER:

SCALE: AS NOTED

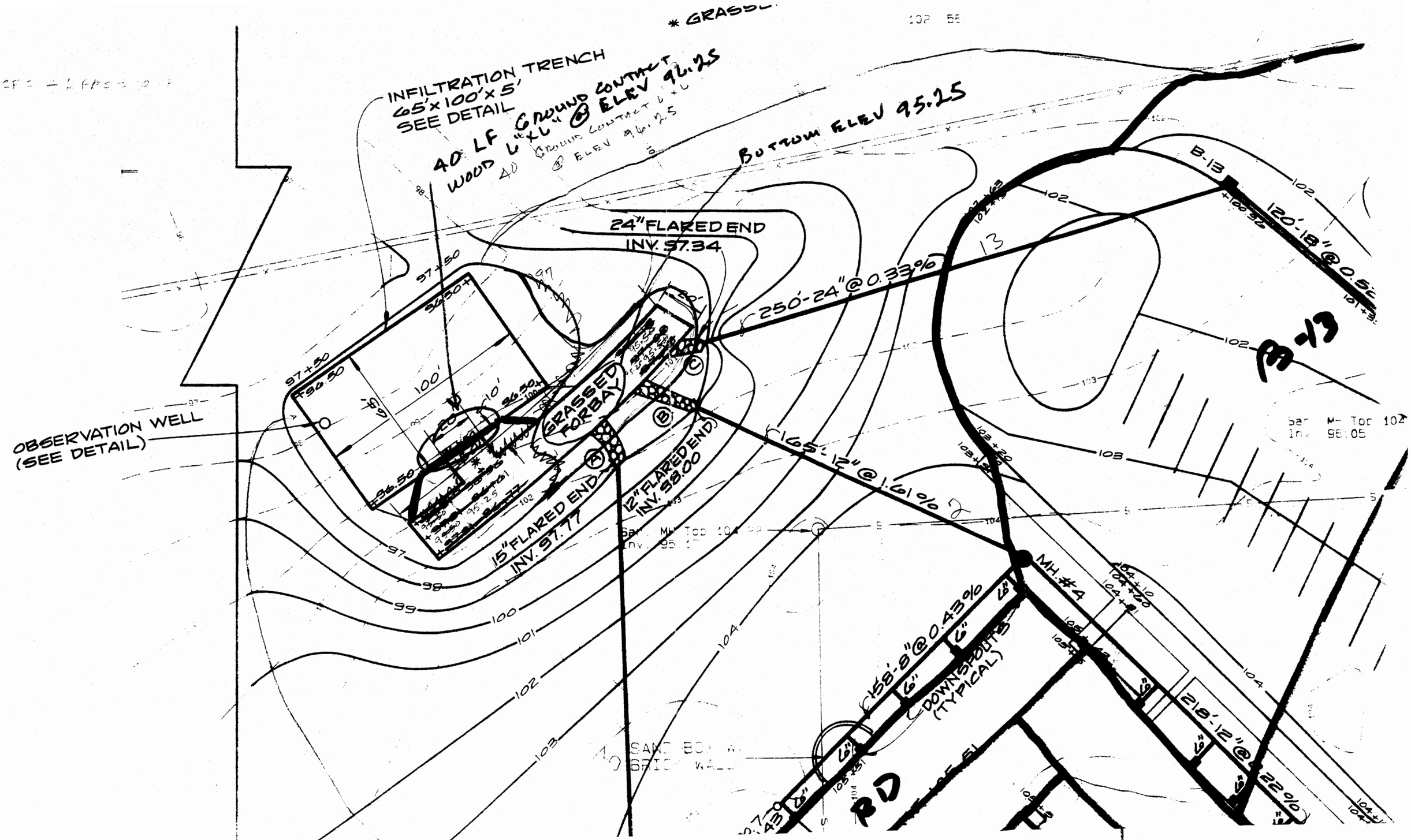
INFILTRATION TRENCH
65'x100'x5'
SEE DETAIL
40 LF GROUND CONTACT
WOOD 6"x6" @ ELEV 96.25
BOTTOM ELEV 95.25
24" FLARED END
INV. 97.34
250'-24" @ 0.33%
B-13
120'-18" @ 0.52
OBSERVATION WELL
(SEE DETAIL)
GRASSED FOREBAY
12" FLARED END
INV. 98.00
15" FLARED END
INV. 97.77
165'-12" @ 1.61%
MH. #4
158'-8" @ 0.43%
DOWNSPOUTS
(TYPICAL)
218'-12" @ 2.22%
SAND BOX
BRICK WALL
RD

DRAINAGE AREA TO EX. INFILTRATION TRENCHES = 8.000 ACRES

BUILDING IMPERVIOUS IN DRAINAGE AREA = 2.292 ACRES
TRAILER IMPERVIOUS IN DRAINAGE AREA = 0.026 ACRES
ASPHALT, CURBING, AND SIDEWALK IN DRAINAGE AREA = 2.399 ACRES
TOTAL IMPERVIOUS = 4.717 ACRES

OPEN SPACE IN DRAINAGE AREA = 3.283 ACRES

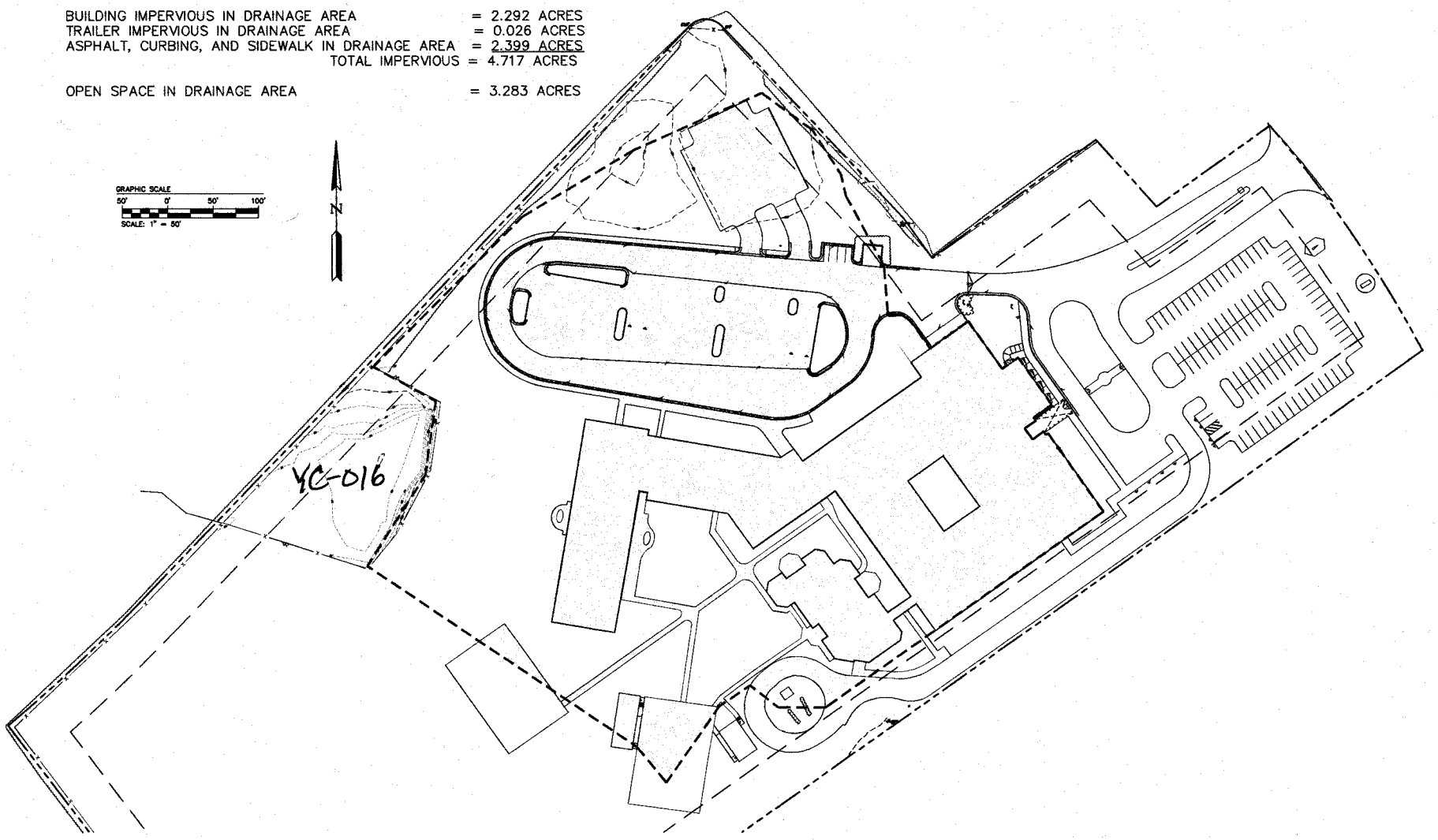

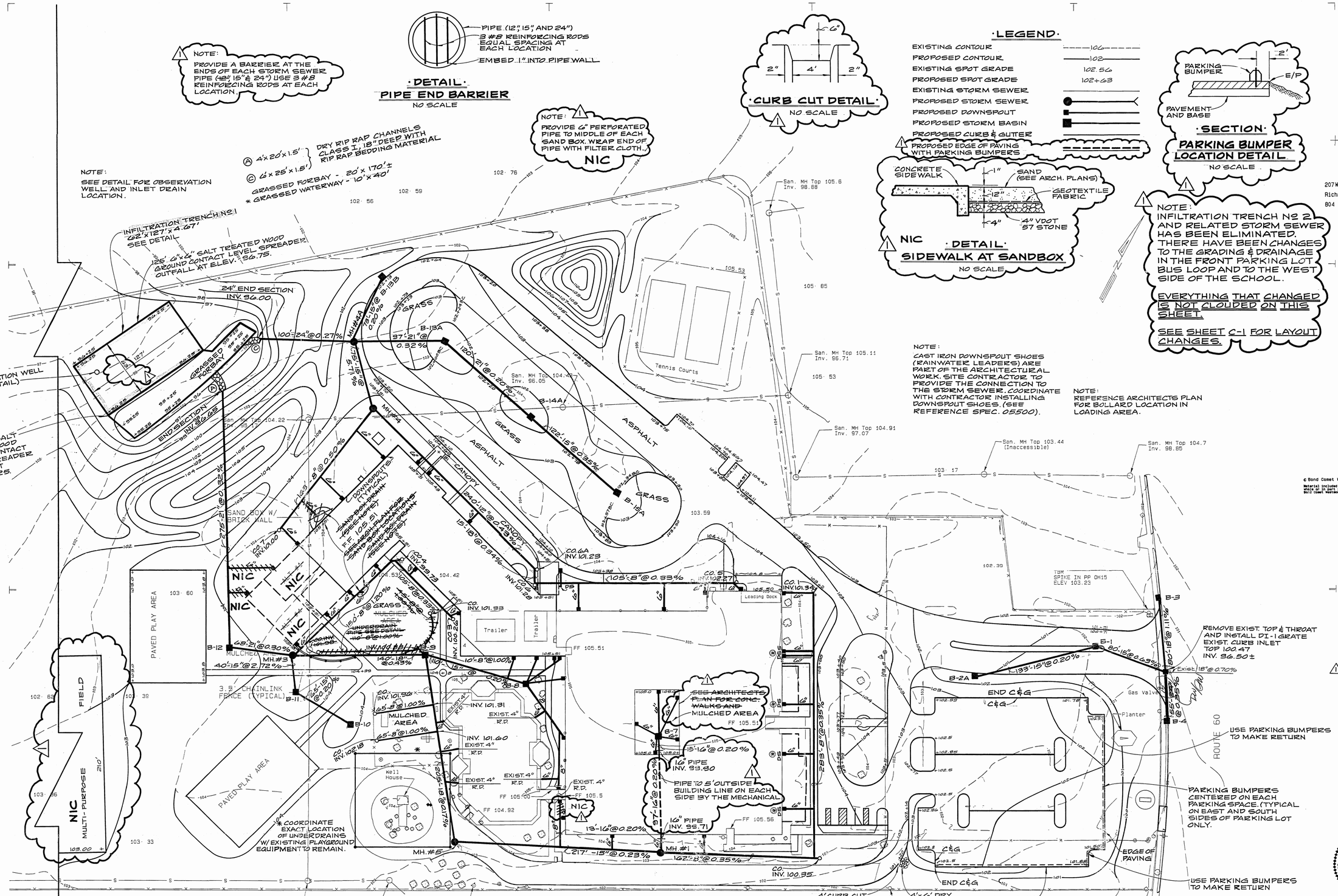

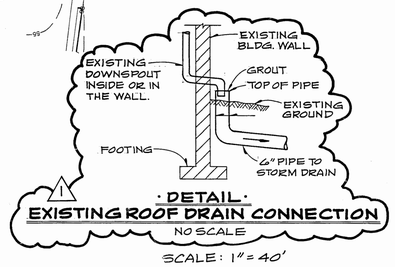

BOND COMET WESTMORELAND + HINER

207 West Broad Street
Richmond, Virginia 23220
804 788-4774

ADDITIONS & ALTERATIONS TO

NORGE ELEMENTARY SCHOOL

WILLIAMSBURG–JAMES CITY COUNTY PUBLIC SCHOOLS

NORGE, VIRGINIA

STATE PROJECT #131-7C

© Bond Comet Westmoreland + Hiner Architects, Inc.
Material included herein is covered by copyright. Use of this work in whole or in part is forbidden without the expressed written consent of Bond Comet Westmoreland + Hiner Architects, Inc.

PROJECT NUMBER: 9241

PROJECT MANAGER: CDF

DRAWN BY: AB&A

ISSUE DATE: 12·17·93

REVISIONS: 3·7·94

1 25 APRIL 1994

COMMONWEALTH OF VIRGINIA
A. B. SADLER, JR.
CERTIFICATE No. 2934
CERTIFIED PROFESSIONAL ENGINEER

SHEET TITLE: GRADING AND DRAINAGE PLAN

SHEET NUMBER: C·4

YC016
SP-132-93

SP-132-93

ADDITION TO

NORGE ELEMENTARY

PHASE III

WILLIAMSBURG–
JAMES CITY COUNTY
PUBLIC SCHOOLS

RECEIVED
SEP 1993

NORGE, VIRGINIA
STATE PROJECT 131-7D

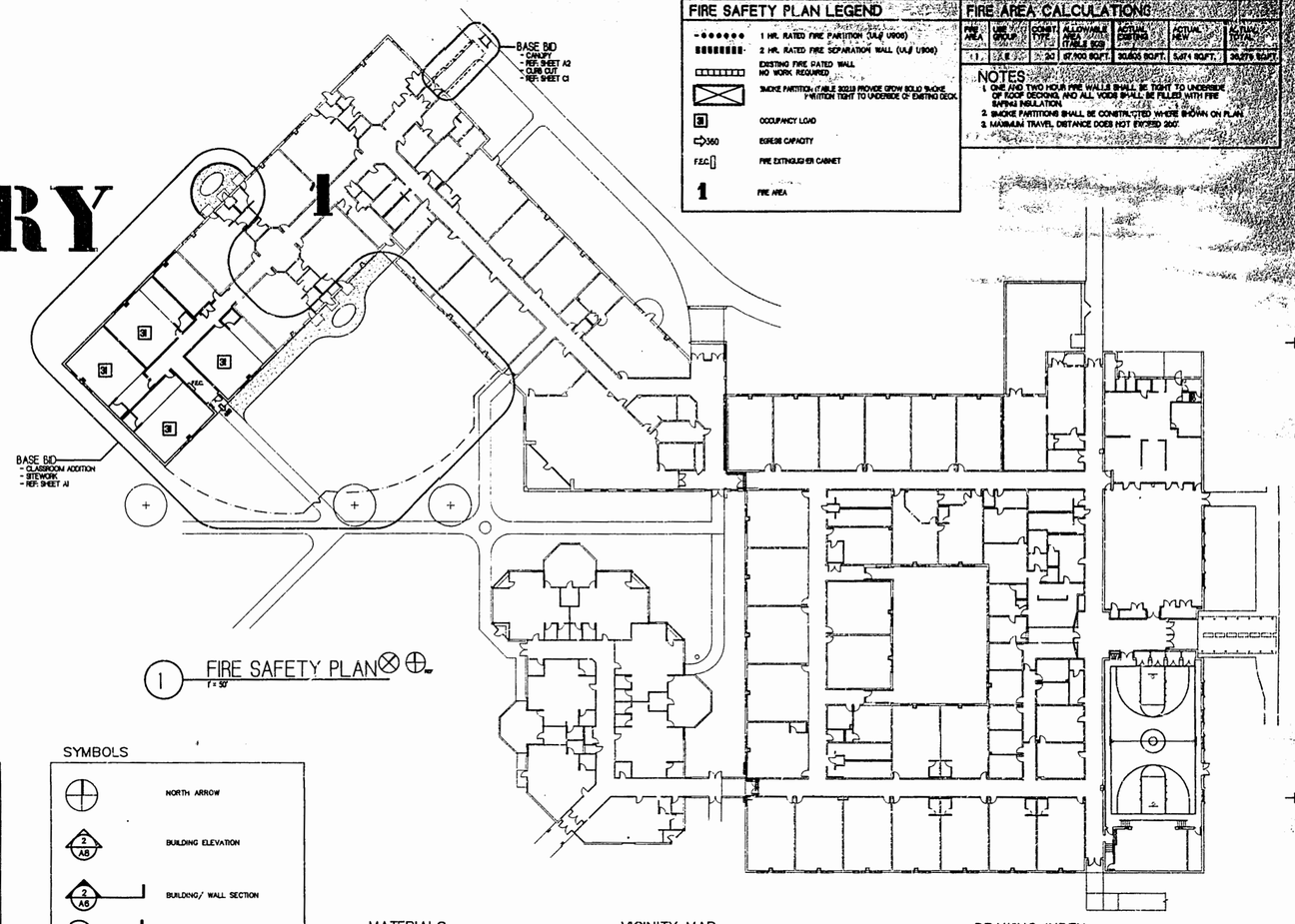

1 FIRE SAFETY PLAN 1" = 50'

FIRE SAFETY PLAN LEGEND

- 1 HR. RATED FIRE PARTITION (UL# U906)
- 2 HR. RATED FIRE SEPARATION WALL (UL# U906)
- EXISTING FIRE RATED WALL NO WORK REQUIRED
- SMOKE PARTITION (TABLE 803.3) BRONZE GROW BOLD SMOKE PARTITION TIGHT TO UNDERSIDE OF EXISTING DECK.
- OCCUPANCY LOAD
- 360 EGRESS CAPACITY
- F.E.C. FIRE EXTINGUISHER CABINET
- 1 FIRE AREA

FIRE AREA CALCULATIONS

FIRE AREA	USE GROUP	CONST. TYPE	ALLOWABLE AREA (TABLE 503)	ACTUAL EXISTING	ACTUAL NEW	ACTUAL TOTAL
1	E	2C	67,000 SQ.FT.	30,605 SQ.FT.	5,471 SQ.FT.	36,076 SQ.FT.

NOTES
1. ONE AND TWO HOUR FIRE WALLS SHALL BE TIGHT TO UNDERSIDE OF ROOF DECKING, AND ALL VOIDS SHALL BE FILLED WITH FIRE BATHING INSULATION.
2. SMOKE PARTITIONS SHALL BE CONSTRUCTED WHERE SHOWN ON PLAN.
3. MAXIMUM TRAVEL DISTANCE DOES NOT EXCEED 200'.

ABBREVIATIONS

ABV	above	FCU	fan coil unit	PVMT	pavement
AFF	above finished floor	FEC	fire extinguisher cabinet	PR	pair
ACT	acoustical tile	FA	fire alarm	PERIM	perimeter
ACC	accoustic (al)	FLASH	flashing	PLAS	plaster
AESS	architectural exposed structural steel	FLR	floor (ing)	PLAM	plastic laminate
AHU	air handling unit	FD	floor drain	PL	plate
AHU	air handling unit	FLUOR	fluorescent	PLYWD	plywood
ALUM	aluminum	FT	foot or feet	PVC	polyvinyl chloride
AB	anchor bolt	FTG	footing	PCF	pounds per cubic foot
APPROX	approximate	GA	gauge	PFL	pounds per lineal foot
AD	area drain	GALV	galvanized	PSF	pounds per square foot
AVT	abrasive vinyl tile	GC	general contract (contractor)	PSI	pounds per square inch
BRG	bearing	GL	glass/glazing	PC	precast
BEL	below	GLB	glass block	QT	quarry tile
BLDG	building	GCMU	glazed concrete masonry unit	R	riser
BLK	block	GR	grade	RA	return air
BLKG	blocking	GFCMU	ground face CMU	RAD	radius
BD	board	GPDW	gypsum drywall	RD	roof drain
BM	beam	HDW	hardware	RCP	reinforced concrete pipe
BOTT	bottom	HTG	heating	REF	reference (refer)
BRK	brick	HVAC	heating ventilating air conditioning	RECEP	receptacle
B/T	between	HGT	height	RFL	reflect (ed)
BUR	built up roofing	HM	hollow metal	REFR	refrigerator
BW	bottom of wall	HORZ	horizontal	REINF	reinforced
BYD	beyond	HB	hose bib	REQ	required
CPT	carpet	HR	hour	RESIL	resilient
CI	cast iron	INCL	include	RH	right hand
CEM BD	cement board	ID	inside diameter	RND	round
CLG	ceiling	INSUL	insulation	RM	room
CTR	center	INT	interior	RL	rain leader
CT	ceramic tile	JAN	janitor closet	RO	rough opening
CIR	circle	JT	joint	SACT	suspended acoustic ceiling tile
CLR	clear (ance)	J	joist	SCHED	schedule
CLOS	closet	KIT	kitchen	SFCMU	split face CMU
CO	clean out	LBL	label	SLNT	sealant
COL	column	LAM	laminate	SECT	section
COMP	composition	LAV	lavatory	SHT	sheet
CONC	concrete	LH	left hand	SIM	similar
CMU	concrete masonry unit	L	length	SC	solid core
CONST	construction	LT	light	S	south
CONT	continuous or continue	LT WT	light weight	SPEC	specification
CLL	contract limit line	LF	linear foot	SQ	square
CJ	control joint	LL	live load	STD	standard
CG	corner guard	MH	manhole	STC	sound transmission class
CORR	corridor	MFR	manufacturer	STL	steel
CRS	coarse (s)	MAS	masonry	STOR	storage
CF	cubic feet	MO	masonry opening	STRUCT	structure
CY	cubic yard	MTL	metal	SYM	symmetry (ical)
DEPT	department	MAX	maximum	SUSP	suspended
DTL	detail	MECH	mechanical	SYS	system
DIAM	diameter	MED	medium	TEL	telephone
DISP	dispenser	MBR	member	TV	television
DIV	division	MATL	material	TEMP	tempered
DR	door	M	meter	TER	terrazzo
DBL	double	MM	millimeter	THK	thick
DH	double hung	MIN	minimum	THR	threshold
DN	down	MIR	mirror	T & G	tongue and groove
DS	downspout	MISC	miscellaneous	TC	top of curb
DWG	drawing	MOD	modular	TP	top of pavement
DF	drinking fountain	MTD	mounted	T	tread
EA	each	NAT	natural	TOW	top of wall
E	east	NRC	noise reduction coefficient	TYP	typical
EJ	expansion joint	NOM	nominal	UC	undercut
ELEC	electric (al)	N	north	UNF	unfurnished
EWC	electric water cooler	NIC	not in contract	UNO	unless noted otherwise
ELEV	elevation	NTS	not to scale	UR	urinal
EMER	emergency	No.	number	VB	vapor barrier
ENCL	enclosure	O/	over	VERT	vertical
EQUIP	equipment	OC	on center	VEST	vestibule
EST	estimate	OFF	office	VCT	vinyl composite tile
EXH	exhaust	OPNG	opening	VWC	vinyl wall covering
EXIST	existing	OPP	opposite	WH	wall hydrant
EO	existing dimension	OWSJ	open web steel joist	WP	waterproofing
EXP	expansion	OPTH	opposite hand	WWF	welded wire fabric
EXT	exterior	OD	outside diameter	W	west
EIFS	exterior insulation finish system	OA	overall	WT	weight
FOC	face of concrete	OH	overhead	WIN	window
FOM	face of masonry	PT	pressure treated	W/	with
FOS	face of stone	PTD	painted	W/O	without
FF	finish floor			WD	wood
FIN	finish (ed)				

SYMBOLS

- NORTH ARROW
- BUILDING ELEVATION (2 / A8)
- BUILDING/ WALL SECTION (2 / A6)
- DETAIL: REFER DRAWING SHEET (1 / A7)
- COLUMN GRID (A / 1)
- INTERIOR ELEVATION (A9 / 2 / 3)
- WINDOW TYPE (A)
- DOOR NUMBER (102)
- ELEVATION DATUM
- PARTITION TYPE (A1)
- TOILET ACCESSORY (C)
- CHALKBOARD/ TACKBOARD (12 / 2)

MATERIALS

- EARTH/COMPACTED FILL
- POROUS FILL
- CONCRETE
- SAND/MORTAR/GROUT/PLASTER
- BRICK (COMMON OR FACE)
- C.M.U.
- CUT STONE
- MARBLE
- STEEL
- ALUMINUM
- FINISH WOOD
- WOOD FRAMING
- WOOD BLOCKING
- PLYWOOD
- GLASS
- BATT INSULATION
- RIGID INSULATION
- ACOUSTIC TILE
- GYPSUM BOARD

VICINITY MAP

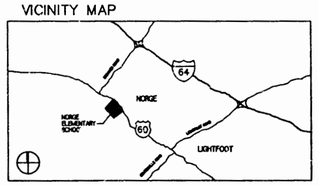

PROJECT DATA

BUILDING USE GROUP — E-EDUCATION

CONSTRUCTION TYPE (REF. SHEET A1)
1. ORIGINAL (1969) FACILITY — 2C
2. PREVIOUS ADDITION (1973) - RENOVATION (1993) — 2B
3. PREVIOUS ADDITION (1993) — 2C
4. PROPOSED ADDITION (1993) - ADDITION "BASE BID" — 2C

FIRE SUPPRESSION: COMPLETE AUTOMATIC FIRE SUPPRESSION SPRINKLER SYSTEM

BUILDING AREA:
1. ORIGINAL (1969) FACILITY — 22986 SQ.FT.
2. PREVIOUS ADDITION (1973) - RENOVATION (1993) — 10614 SQ.FT.
3. PREVIOUS ADDITION: (1993) — 30605 SQ.FT.
4. PROPOSED ADDITION (1993) - ADDITION "BASE BID" — 5471 SQ.FT.
TOTAL BUILDING AREA — 69676 SQ.FT.

OCCUPANT LOAD (REF. SHT. T1)
BASE BID — 124

PARKING: (EXISTING) 88 SPACES
INCLUDING 5 HANDICAP SPACES

THIS PROJECT IS DESIGNED FOR COMPLIANCE WITH THE APPLICABLE PROVISIONS OF THE 1993 UNIFORM STATEWIDE BUILDING CODE (BOCA)

DRAWING INDEX

T-1 TITLE SHEET AND FIRE SAFETY PLAN

CIVIL
C-1 LAYOUT, GRADING, AND DRAINAGE PLAN
C-2 DETAILS

ARCHITECTURAL
A-1 FLOOR PLAN / ELEVATIONS / REFLECTED CEILING PLAN / DETAILS
A-2 CANOPY DETAILS / WINDOW TYPES AND DETAILS / DOOR SCHEDULE AND DETAILS
A-3 ENLARGED TOILET PLAN / CASEWORK ELEVATIONS AND DETAILS / ROOF PLAN

STRUCTURAL
S-1 FRAMING DETAILS
S-2 DETAILS

MECHANICAL
M-1 MECHANICAL SCHEDULES & NOTES
M-2 PARTIAL FLOOR PLAN - MECHANICAL

PLUMBING
P-1 FLOOR PLAN - PLUMBING, SCHEDULES, NOTES & SYMBOLS

ELECTRICAL
E-1 SYMBOLS, ABBREVIATIONS, & ELECTRICAL DEMOLITION
E-2 SCHEDULES, NOTES, DIAGRAM, & ELECTRICAL FLOOR PLANS

BOND COMET WESTMORELAND HANER

CONSULTANTS
CIVIL
MECHANICAL, ELECTRICAL, PLUMBING
STRUCTURAL

NORGE ELEMENTARY SCHOOL
PHASE III

WILLIAMSBURG–JAMES CITY COUNTY PUBLIC SCHOOLS

NORGE, VIRGINIA
STATE PROJECT 131-7D

© Bond Comet Westmoreland • Haner Architects, Inc.

PROJECT NUMBER 9540
PROJECT MANAGER DDW
DRAWN BY EJR
ISSUE DATE 17 JUNE 1998
REVISIONS

COMMONWEALTH OF VIRGINIA
NICOLAS B. COMMODARI
LICENSED ARCHITECT

TITLE SHEET
FIRE SAFETY PLAN

(23a) (81-35)
SP-132-93
Norge Elementary School additions & Renovations (Addendum)
1/8

SHEET NUMBER
T1

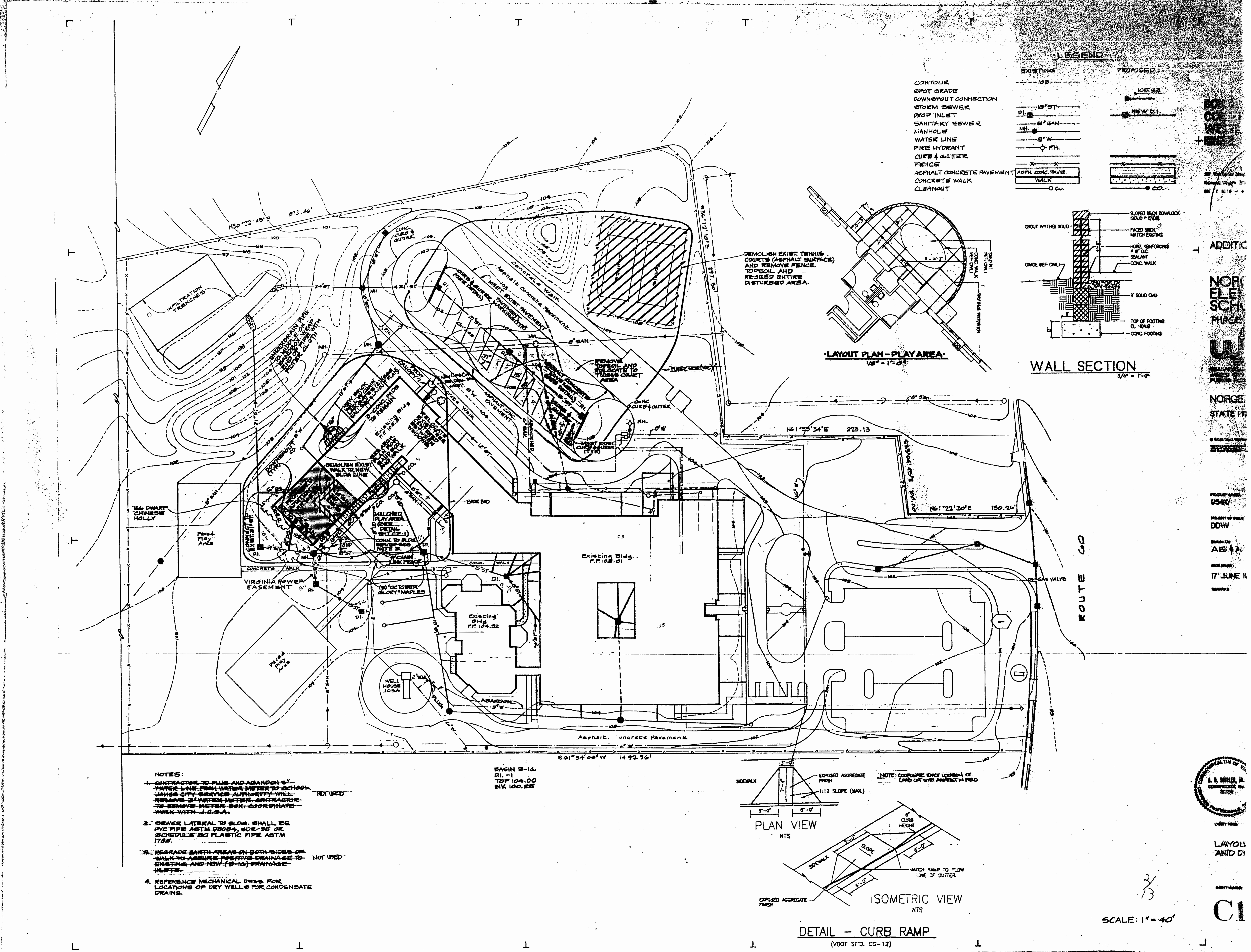
LEGEND
EXISTING
PROPOSED
CONTOUR
SPOT GRADE
DOWNSPOUT CONNECTION
STORM SEWER
DROP INLET
SANITARY SEWER
MANHOLE
WATER LINE
FIRE HYDRANT
CURB & GUTTER
FENCE
ASPHALT CONCRETE PAVEMENT
CONCRETE WALK
CLEANOUT
LAYOUT PLAN - PLAY AREA
WALL SECTION
DEMOLISH EXIST. TENNIS COURTS (ASPHALT SURFACE) AND REMOVE FENCE. TOPSOIL AND RESEED ENTIRE DISTURBED AREA.
INFILTRATION TRENCHES
Existing Bldg. F.F. 103.51
Existing Bldg. F.F. 104.52
VIRGINIA POWER EASEMENT
WELL HOUSE
Asphalt Concrete Pavement
ROUTE 60
S61°34'00"W 1492.96'
N50°22'45"E 873.46'
N61°53'34"E 223.13
N61°22'30"E 150.26'
BASIN B-16
DI. -1
TOP 104.00
INV. 100.25
NOTES:
1. CONTRACTOR TO PLUG AND ABANDON 8" WATER LINE FROM WATER METER TO SCHOOL. JAMES CITY SERVICE AUTHORITY WILL REMOVE 2" WATER METER. CONTRACTOR TO REMOVE METER BOX. COORDINATE WORK WITH J.C.S.A. — NOT USED
2. SEWER LATERAL TO BLDG. SHALL BE PVC PIPE ASTM D3034, SDR-35 OR SCHEDULE 80 PLASTIC PIPE ASTM 1785.
3. REGRADE EARTH AREAS ON BOTH SIDES OF WALK TO ASSURE POSITIVE DRAINAGE TO EXISTING AND NEW (B-16) DRAINAGE INLETS. — NOT USED
4. REFERENCE MECHANICAL DWGS. FOR LOCATIONS OF DRY WELLS FOR CONDENSATE DRAINS.
PLAN VIEW
NTS
ISOMETRIC VIEW
NTS
DETAIL - CURB RAMP
(VDOT ST'D. CG-12)
SCALE: 1" = 40'
C1

Date Record Created:

Created By:

WS_BMPNO: YC016

Print Form

PRINTED ON:
Saturday, March 13, 2010
3:18:37 PM

WATERSHED	YC
BMP ID NO	016
PLAN NO	SP-132-93
TAX PARCEL	(23-2)(1-35)
PIN NO	23201000035
CONSTRUCTION DATE	1/1/1996
PROJECT NAME	Norge Elementary School
FACILITY LOCATION	7311 Richmond Road
CITY-STATE	Williamsburg, VA
CURRENT OWNER	WJCC Schools
OWNER ADDRESS	
OWNER ADDRESS 2	
CITY-STATE-ZIP CODE	Williamsburg, VA 23185
OWNER PHONE	
MAINT AGREEMENT	Yes
EMERG ACTION PLAN	No

MAINTENANCE PLAN	No	CTRL STRUC DESC	Dual Infil Ch
SITE AREA acre	19.8	CTRL STRUC SIZE inches	
LAND USE	School	OTLT BARRL DESC	None
old BMP TYP	Infiltration Trench	OTLT BARRL SIZE inch	0
JCC BMP CODE	C1 Infiltration Trench .5		
POINT VALUE	11	EMERG SPILLWAY	No
		DESIGN HW ELEV	
		PERM POOL ELEV	na
SVC DRAIN AREA acres	8	2-YR OUTFLOW cfs	11.00
		10-YR OUTFLOW cfs	
		REC DRAWING	No
SERVICE AREA DESCRI	School		
IMPERV AREA acres	3.50	CONSTR CERTIF	No
RECV STREAM	UT of Yarmouth Creek		
EXT DET-WQ-CTRL	No	LAST INSP DATE 11/2/2000	Inspected by:
WTR QUAL VOL acre-ft	0	INTERNAL RATING 4	
CHAN PROT CTRL	No		
CHAN PROT VOL acre-ft	1	MISC/COMMENTS	
SW/FLOOD CONTROL	No	60x125x5, grass forebay w/ underground infiltration chambers.	
GEOTECH REPORT	No		

Get Last BMP No

Return to Menu

Additional Comments: